UNITED STATES PATENT AND TRADEMARK OFFICE

BEFORE THE PATENT TRIAL AND APPEAL BOARD

BAZOOKA-FARMSTAR, LLC,
Petitioner
v.
NUHN INDUSTRIES LTD.,
Patent Owner

Case No. IPR2023-01161
Patent No. 11,358,425

DECLARATION OF DOUGLAS S. PRAIRIE

BABY JOGGER
EXHIBIT 2102

Contents

I. INTRODUCTION 1
II. BACKGROUND AND QUALIFICATIONS 1
III. MATERIAL CONSIDERED AND SUMMARY OF OPINIONS 3
IV. BACKGROUND ON FARM LAGOONS, MANURE AGITATION, AND SPREADING 9
V. OVERVIEW OF THE '425 PATENT 17
VI. COMMERCIAL EMBODIMENTS 19
VII. APPLICABLE LEGAL STANDARDS AND PRINCIPLES 22
A. The Prior Art 22
B. Anticipation 22
C. Obviousness 23
VIII. PERSON OF ORDINARY SKILL IN THE ART 24
IX. CLAIM CONSTRRCTION 25
A. "a fluid pump for pumping liquid manure" 26
B. "liquid manure" 29
X. OVERVIEW OF THE CITED ART 32
A. Carrier [EX1005] 33
B. Truxor [EX1006] 34
C. SenwaTec [EX1012] 35
D. Yoon [EX1010 and EX1011] 35
E. Puck [EX1014] 36
F. Bryham [EX1015] 37
G. Bennett-II [EX1017] 38
H. Lyseng [EX1019] 40
XI. GROUND 1: CLAIMS 1-21 ARE NOT ANTICIPATED BY CARRIER 40
A. Carrier Fails to Disclose or Suggest a Fluid Pump For Pumping Liquid Manure 41
B. Carrier Fails to Disclose All of the Wireless Remote Control Limitations of Claim 1 44
C. Carrier Fails to Disclose a Submersible Pump Housing With a Bottom Fluid Inlet and At Least Two Tangential Fluid Outlets 44
D. Carrier Fails to Disclose the Claimed Combination of Elements, Which When Considered Collectively, Define an Amphibious Manure Lagoon Agitation Vehicle 45
XII. GROUND 2: CLAIMS 1-7 AND 12-19 ARE NOT OBVIOUS BASED ON TRUXOR IN VIEW OF YOON OR CARRIER 45

A. The Truxor Combination Fails to Disclose or Suggest a Fluid Pump For Pumping Liquid Manure 46

B. The Truxor Combination Fails to Disclose All of the Wireless Remote Control Limitations of Claim 1 48

C. The Truxor Combination Fails to Disclose a Submersible Pump Housing With At Least Two Tangential Fluid Outlets 48

D. The Truxor Combination Fails to Disclose the Claimed Combination of Elements, Which When Considered Collectively, Define an Amphibious Manure Lagoon Agitation Vehicle 50

E. A POSITA Would Not Have Had a Reasonable Expectation of Success in Combining Truxor With Yoon or Carrier 52

XIII. GROUND 3: CLAIMS 1-7 AND 12-19 ARE NOT OBVIOUS BASED ON SENWATEC IN VIEW OF YOON OR CARRIER 61

A. The SenwaTec Combination Fails to Disclose or Suggest a Fluid Pump For Pumping Liquid Manure 61

B. The SenwaTec Combination Fails to Disclose All of the Wireless Remote Control Limitations of Claim 1 63

C. The SenwaTec Combination Fails to Disclose a Submersible Pump Housing With At Least Two Tangential Fluid Outlets 64

D. The SenwaTec Combination Fails to Disclose the Claimed Combination of Elements, Which When Considered Collectively, Define an Amphibious Manure Lagoon Agitation Vehicle 66

E. A POSITA Would Not Have Had a Reasonable Expectation of Success in Combining SenwaTec With Yoon or Carrier 68

XIV. GROUND 4: CLAIMS 1-21 ARE NOT OBVIOUS BASED ON PUCK IN VIEW OF BRYHAM 73

A. The Puck-Bryham Combination Fails to Disclose or Suggest a "Power Source Configured to Provide Power to Both the Ground Engaging Propulsion Structure and the Fluid Pump" 73

B. The Puck-Bryham Combination Fails to Disclose "Wireless Remote Control Configured to… (1) Control the Ground Engaging Propulsion Structure" 74

C. The Puck-Bryham Combination Fails to Disclose a Submersible Pump Housing With At Least Two Tangential Fluid Outlets 75

D. A POSITA Would Not Have Possessed a Motivation to Combine Puck and Bryham 77

E. A POSITA Would Not Have Had a Reasonable Expectation of Success in Combining Bryham With Puck 80

XV. GROUND 5: CLAIMS 1-21 ARE NOT OBVIOUS BASED ON PUCK IN VIEW OF BRYHAM AND BENNETT-II 85

A. The Puck-Bryham-Bennett Combination Fails to Disclose or Suggest a "Power Source Configured to Provide Power to Both the Ground Engaging Propulsion Structure and the Fluid Pump" 85

B. The Puck-Bryham-Bennett Combination Fails to Disclose "Wireless Remote Control Configured to … (1) Control the Ground Engaging Propulsion Structure" 86

C. The Puck-Bryham-Bennett Combination Fails to Disclose a Submersible Pump Housing With At Least Two Tangential Fluid Outlets 87

D. A POSITA Would Not Have Possessed a Motivation to Combine Puck, Bryham, and Bennett-II 90

E. A POSITA Would Not Have Had a Reasonable Expectation of Success in Combining Bryham and Bennett-II With Puck 93

XVI. GROUND 6: CLAIMS 1-21 ARE NOT ANTICIPATED BY LYSENG 98

XVII. CONCLUSION 98

I. INTRODUCTION

I, Douglas S. Prairie, declare as follows:

1. I have been retained by Nuhn Industries Ltd. ("Patent Owner" or "Nuhn") as an independent expert consultant in this proceeding before the United States Patent and Trademark Office ("USPTO") regarding U.S. Patent No. 11,358,425 ("the '425 Patent"). I have been asked to consider whether certain references disclose or suggest the features recited in at least Claim 1 of the '425 Patent, which is the sole independent claim. My opinions are set forth below. I understand that Petitioner has challenged Claims 1-21 of the '425 Patent ("the Challenged Claims") and that I may be asked to provide my opinions on dependent Claims 2-21 at a later date.

2. I am being compensated at my typical rate of $325 per hour for the time I spend on this matter. My compensation is in no way contingent on the nature of my findings, the presentation of my findings in testimony, or the outcome of this or any other proceeding. I have no other interest in this proceeding.

II. BACKGROUND AND QUALIFICATIONS

3. I am an agricultural engineer with over 25 years of experience in machine design and product development solutions, specializing in off-highway and agriculture machinery systems.

4. I grew up on a family grain and livestock farm in southern Minnesota where I operated tractors, tillage equipment, skid steers, and manure handling and spreading equipment. My father was a professional mechanic, so we serviced and repaired most of the machinery on our family's operation. I have in-laws who own and operate an 800 head dairy farm near Sioux Falls, South Dakota. I have worked at their dairy farm many times over the past 25 years helping with feeding, equipment maintenance, harvest, tillage, and working with their manure systems. The lagoon on their dairy farm is typical of most lagoons of their herd size in the upper Midwest. It is an earthen style structure with steep side walls and a shallower concrete apron where the tractor and power take-off ("PTO") powered agitator can be backed into the lagoon to agitate prior to the

manure being pumped out. The lagoon often crusts over and has a fence around it to minimize the chance for someone to inadvertently walk on a surface that could easily be mistaken for a weedy pasture. My father-in-law always makes sure to remind me of the hazards of the lagoon when my children might happen to be playing near that area of the farm. Fall harvest operations keep everyone busy with their operations, so they often hire a commercial manure applicator to pump the lagoon out and spread or knife in the manure on their harvested ground prior to fall tillage. The commercial manure applicator sometimes brings a floating manure agitator to speed up the lagoon agitation process and produce a more homogenous manure product. The lagoon is pumped out annually in the fall and quite often during the summer months after alfalfa harvest.

5. I am currently employed in Brookings, South Dakota as a lecturer at South Dakota State University ("SDSU") in the Agriculture and Biosystems Engineering ("ABE") Department. SDSU is a premier land grant research and teaching institution and is the first in the country to offer a four-year Precision Agriculture Degree. Courses I am responsible for involve every aspect of the design, operation, service, and ownership of agriculture machinery systems, including livestock manure management technologies. My students include Agriculture and Biosystems Engineers, Mechanical Engineers, Electrical Engineers, Agriculture Technology students and Precision Agriculture students. These students enter the workforce into a wide variety of career paths including design of agriculture machinery systems, design of livestock structures, design of manure management systems, livestock farm owners and operators, plus many other agriculture careers such as commercial manure applicators.

6. Prior to joining SDSU in August of 2016, I was employed within the agriculture and construction equipment industry for 20 years in roles ranging from design engineering to product and sales management. My experience includes design of planting and seeding equipment, design of concrete placing and cutting equipment, construction project management, design of high horsepower trash pumps, product/sales management of precision agriculture control systems, and research on cellulosic ethanol production systems.

7. In December of 2004, I received a master's degree from Boise State University in Mechanical Engineering, and in May of 1997, I received a bachelor's degree from SDSU in Agricultural Engineering with a Power and Machinery Focus.

8. I am a registered Professional Engineer in the State of Idaho.

9. I have designed and developed a wide variety of agricultural and construction equipment including planting and seeding equipment, precision agriculture control systems, concrete power trowels, concrete saws, and high horsepower job site trash pumps. One of the courses I lead at SDSU is a two-semester Capstone Design course for our senior ABE students. Students that select the Natural Resource tract of the ABE program often work on projects related to the design of agriculture livestock structures and livestock waste management systems. These capstone projects are sponsored by regional livestock farmers, so the students obtain exposure to actual, modern-day livestock industry design challenges.

10. I am the named inventor on 8 patents and 1 pending patent application. These patents are generally directed to seed delivery systems, agricultural implements, and concrete machinery.

11. I have consulted as an expert witness on previous intellectual property disputes involving patents. My work in this capacity has included, among other things, reviewing and analyzing accused products, reviewing and analyzing patents, writing expert reports, and providing deposition testimony.

12. A copy of my curriculum vitae, a list of my patents and patent applications, and a list of the cases I have worked on as an expert witness are attached as EX2005.

III. MATERIAL CONSIDERED AND SUMMARY OF OPINIONS

13. The opinions contained in this Declaration are based on the documents I reviewed, my professional judgment, as well as my education, experience, and knowledge regarding agricultural equipment, farming operations, and manure lagoons.

14. In reaching the opinions and conclusions discussed herein, I reviewed, considered,

and/or relied upon the following materials:

Exhibit #	*Description*
--	Bazooka-Farmstar, LLC's Petition for IPR2023-01161
1001	U.S. Patent No. 11,358,425 ("the '425 Patent")
1002	Prosecution History of U.S. Patent No. 11,358,425
1003	Curriculum Vitae of Eric Winkel
1004	Declaration of Eric Winkel, dated June 29, 2023 ("Winkel Decl.")
1005	U.S. Patent Application Publication No. 2012/0185129 ("Carrier")
1006	DOROTEA MEKANISKA AB, TRUXOR AMPHIBIAN TOOL CARRIER ("Truxor")
1007	Declaration of Jan David Arnoldsson, dated February 26, 2023
1008	Declaration of Reidar Olofsson, dated February 27, 2023
1009	Declaration of Nathaniel E Frank-White, dated December 12, 2022
1010	KR Publication No. 20130016490 ("Yoon")
1011	English Translation of Yoon (EX1010) and Declaration of Taylor Liff, dated June 7, 2023
1012	SENWATEC-SCHRÖER UMWELT-& GEWÄSSERTECHNOLOGIE GMBH & CO. KG, LIGHT AMPHIBIOUS BOAT/VEHICLE "AMPHI-KING®" SWT--AB380 ("SenwaTec")
1013	Declaration of Ansgar Lonnemann, dated June 15, 2023
1014	U.S. Patent Application Publication No. 2014/0112093 ("Puck")
1015	U.S. Patent No. 7,314,395 ("Bryham")
1016	U.S. Patent Application Publication No. 2014/0288763 ("Bennett")
1017	U.S. Patent Application Publication No. 2021/0331752 ("Bennett-II")
1018	U.S. Provisional Patent Application No. 61/805,133 ("the '133 Provisional")
1019	Ron Lyseng, Float your boat in a slurry moat, THE WESTERN PRODUCER, dated August 29, 2013 ("Lyseng")
1020	U.S. Patent No. 7,478,817 ("Carrier-II")
1021	DOROTEA MEKANISKA AB, TRUXOR AMPHIBIAN TOOL CARRIER (2013) ("Truxor-II")
1022	DOROTEA MEKANISKA AB, TRUXOR AMPHIBIAN TOOL CARRIER (2013)

	("Truxor-III")
1023	DOROTEA MEKANISKA AB, TRUXOR AMPHIBIAN TOOL CARRIER ("Truxor-IV")
1024	Russian Patent Application No. 2012137830/11 ("Melnikov")
1025	English Translation of Melnikov (EX1024) and Declaration of Samuel Goldfarb, dated June 7, 2023
1026	Johanna Kaschik, Der Frosch als Vorbild, HNA (August 25, 2011), https://www.hna.de/lokales/rotenburg-bebra/frosch-vorbild-1376974.html
1027	English Translation of Der Frosch als Vorbild (EX1026) and Declaration of Beverly Santamaria, dated June 8, 2023
1028	Screenshots from UD Umwelt-Dienste GmbH Amphi-King Manure Pumping Video
1029	U.S. Patent No. 8,944,758 ("the '758 Patent")
1030	U.S. Provisional Patent Application No. 61/867,598 ("the '598 Provisional")
1031	International Publication of PCT Application No. PCT/CA2014/050,789 ("the '789 PCT")
1032	Notification of the International Application Number and International Filing Date of PCT Application No. PCT/CA2014/050,789
1033	Excerpts of Prosecution History of U.S. Patent No. 9,694,636
1034	Excerpts of Prosecution History of U.S. Patent No. 10,124,638
1035	Excerpts of Prosecution History of U.S. Patent No. 10,710,422
1036	Excerpts of Prosecution History of U.S. Patent No. 10,974,557
1037	Excerpts of Reexamination History of U.S. Patent No. 10,974,557
1038	Excerpts of Reexamination History of U.S. Patent No. 11,358,425
1039	Stipulation Regarding Invalidity Contentions Filed in the '015 Litigation
1040	NE. REG'L AGRIC. ENG'G SERV., LIQUID MANURE APPLICATION SYSTEMS DESIGN MANUAL (1998)
1041	DONALD L. PFOST & CHARLES D. FULHAGE, U. MO. EXTENSION, LAND APPLICATION EQUIPMENT FOR LIVESTOCK AND POULTRY MANURE MANAGEMENT (2001)
1042	DONALD L. PFOST & CHARLES D. FULHAGE, U. MO. EXTENSION, BEEF MANURE MANAGEMENT SYSTEMS IN MISSOURI (2000)
1043	William F. Wright, *Dairy Manure Particle Size Distribution, Properties, and Implications for Manure Handling and Treatment*, *in* 2005 ASAE ANN. INT'L MEETING (2005)

1044	EFFECTS OF LIQUID VISCOSITY ON ROTODYNAMIC (CENTRIFUGAL AND VERTICAL) PUMP PERFORMANCE (AM. NAT'L STANDARDS INST. 2010)
1045	Ole Thygesen et al., *Indicators of Physical Properties and Plant Nutrient Content of Animal Slurry and Separated Slurry*, 5(3) BIOLOGICAL ENG'G TRANSACTIONS 123 (2012)
1046	Randy L. Beaver, William E. Field, *Summary of Documented Fatalities in Livestock Manure Storage and handling Facilities—1975-2004*, 12 J. AGROMEDICINE 3 (2007)
1047	ROBBIN MARKS, NAT'L RES. DEF. COUNCIL AND THE CLEAN WATER NETWORK, CESSPOOLS OF SHAME (2001)
1048	Dwight D. Bowman & Jeffrey C. Burnham, *Manure Pathogens: Real Issues and Real Risks*, *in* PROCEEDINGS OF THE WATER ENV'T FED'N 694 (2000)
1049	U.S. Ctr. for Disease Control, *Fatalities Attributed to Entering Manure Waste Pits -- Minnesota, 1992*, 42 MORBIDITY & MORTALITY WKLY REP. 325 (1993)
1050	U.S. CTR. FOR DISEASE CONTROL, NAT. INST. FOR OCCUPATIONAL SAFETY AND HEALTH, PREVENTING DEATHS OF FARM WORKERS IN MANURE PITS, Publ. No. 90-103 (1990)
1051	U.S. GOV'T ACCOUNTABILITY OFF., GAO-05-96, WORKPLACE SAFETY AND HEALTH: SAFETY IN THE MEAT AND POULTRY INDUSTRY, WHILE IMPROVING COULD BE FURTHER STRENGTHENED (2005)
1052	SIDUO ZHANG, NAT'L COLLABORATING CTR. FOR ENV'T HEALTH, AIR QUALITY AND COMMUNITY HEALTH IMPACT OF ANIMAL MANURE MANAGEMENT (2011)
1053	MANURE STORAGE SAFETY ASAE EP470 JAN1992 (AM. SOC'Y OF AGRIC. AND BIOLOGICAL ENG'GS 2005)
1054	MIDWEST PLAN SERV., LIVESTOCK WASTE FACILITIES HANDBOOK (3d ed. 1993)
1055	C.A. Loto & A.P.I Popoola, *Environmental Surface Degradation of Galvanised and Mild Steels in Cattle and Poultry Wastes and Urea Solution*, 6(13) INT'L J. PHYS. SCI. 3074-81 (2011)
1056	L.M. Safley, Jr. & P.W. Westerman, *Corrosion of Galvanized Steel in Animal Waste Environments*, 40 BIORESOURCE TECH. 53 (1992)
1057	FRANK YEAPLE, FLUID POWER DESIGN HANDBOOK (3d ed. 1995)
1058	Charles D. Fulhage, *Solids Removal from Livestock Manure Lagoons*, U. MO. EXTENSION (Nov. 1995), https://extension.missouri.edu/publications/wq324
1059	U.S. Patent No. 613,809

1060	ED ODGERS ET AL., MANURE GAS SAFETY: REVIEW OF PRACTICES AND RECOMMENDATIONS FOR WISCONSIN LIVESTOCK FARMS (2008)
1061	U.K. Patent App. No. 2,366,218
1062	U.S. DEP'T AGRIC., *Agricultural Waste Characteristics*, *in* AGRICULTURAL WASTE MANAGEMENT FIELD HANDBOOK ch. 4 (2008)
1063	U.S. DEP'T AGRIC., *Agricultural Waste Management System Component Design*, *in* AGRICULTURAL WASTE MANAGEMENT FIELD HANDBOOK ch. 10 (2009)
1064	U.S. DEP'T AGRIC., *Waste Utilization*, *in* AGRICULTURAL WASTE MANAGEMENT FIELD HANDBOOK ch. 11 (2013)
1065	U.S. DEP'T AGRIC., *Waste Utilization*, *in* AGRICULTURAL WASTE MANAGEMENT FIELD HANDBOOK ch. 11 (1996)
1066	U.S. DEP'T AGRIC., *Waste Management Equipment*, *in* AGRICULTURAL WASTE MANAGEMENT FIELD HANDBOOK ch. 12 (2011)
1067	U.S. DEP'T AGRIC., *Operation, Maintenance, and Safety*, *in* AGRICULTURAL WASTE MANAGEMENT FIELD HANDBOOK ch. 13 (2011)
2001	Petitioner's *Ex Parte* Reexamination Requests for U.S. Patent No. 11,358,425 and U.S. Patent No. 10,974,557
2002	Decision Granting Patent Owner's Petition for an Unintentionally Delayed Priority Claim in U.S. Patent. No. 10,124,638
2003	U.S. Patent No. 4,594,006 to Depeault ("Depeault")
2004	Expert Declaration of Douglas S. Prairie (cited here for completeness)
2005	Curriculum Vitae of Douglas S. Prairie and Case List (cited here for completeness)
2006	Screenshots from Patent Owner's YouTube Channel of Patented Product, retrieved on 10-2-23 from https://www.youtube.com/watch?v=fEgvvq9HZkk
2007	Screenshots from Petitioner's YouTube Channel of Accused Product, retrieved on 10-2-23 from https://www.youtube.com/watch?v=3y3bSJJUOps
2008	Screenshots from Progressive Dairyman YouTube Channel of 2014 Manure Lagoon Agitation Boat Demonstration, published on 7-9-14 by Progressive Dairy, retrieved on 10-2-23 from https://www.youtube.com/watch?v=FXRS-9Ip1pE
2009	Patent Classification List for U.S. Patent No. 11,358,425, retrieved on 10-4-23 from https://patents.google.com/patent/US11358425B1/en?oq=US11358425
2010	U.S. Patent No. 4,406,413 to Houle ("Houle")
2011	U.S. Patent No. 7,833,071 to Gaither ("Gaither")
2012	U.S. Patent No. 5,176,098 to Royle ("Royle")
2013	U.S. Patent No. 9,462,741 to Puck ("Puck-II")

2014	U.S. Patent No. 9,572,297 to Puck ("Puck-III")
2015	DE2364962 to Kronseder ("Kronseder")
2016	DE3431345 to Lüllmann ("Lüllmann")
2017	CA2002619 to Depault ("Depault-II")
2018	U.S. Patent No. 10,118,138 to Tews ("Tews")
2019	DANIEL L. PFOST ET AL., UNIV. OF MO. EXTENSION, ANAEROBIC LAGOONS FOR STORAGE/TREATMENT OF LIVESTOCK MANURE (Oct. 2000)
2020	Screenshots from 2023 North American Manure Expo Website, retrieved on 10-2-23 from https://www.manureexpo.ca/
2021	Dictionary Definitions of "Dredging" and "Agitation", retrieved on 9-30-23 from https://en.wikipedia.org/wiki/Dredging, https://www.merriam-webster.com/dictionary/dredging#dictionary-entry-1, https://www.merriam-webster.com/dictionary/agitation, and https://www.lagoonpumping.com/articles-resources/agriculture-articles/manure-articles/
2022	ENVTL. PROT. AGENCY, PRIMER FOR MUNICIPAL WASTEWATER TREATMENT SYSTEMS (Sept. 2004)
2023	U.S. DEP'T AGRIC., *Agricultural Waste Management Systems*, *in* AGRICULTURAL WASTE MANAGEMENT FIELD HANDBOOK ch. 9 (Dec. 2011)
2024	Screenshot of 2023 Commercial Manure Applicator Certification, retrieved on 10-3-23 from https://elearning-dnr.iowa.gov/course/index.php?categoryid=2
2025	JOSEPH AKYEAMPONG ET AL., *Evaluation of hydraulic excavator Human-Machine Interface concepts using NASA TLX*, 44 INT'L J. OF INDUS. ERGONOMICS 374, 374–82 (2014)
2026	Screenshots of 2023 Truxor Website, retrieved on 10-1-23 from https://truxor.com/en/catalog/node/products and https://truxor.com/en/catalog/node/products-truxor-machines
2027	Screenshots of 2023 Berky (formerly SenwaTec) Website, retrieved on 10-4-23 from https://www.berky.de/en/berky-nereus-240-amphi/
2028	CHRISTIAN HAAS ET AL., *Practical Evaluation of a Control Concept for a Remote Controlled 1.8T Excavator Using a 3D Input Device*, BATH/ASME 2022 Symposium on Fluid Power and Motion Control, ISBN: 978-0-7918-8633-5, FPMC2022-88959, V001T01A012-1 thru V001T01A012-7 (2022)

15. My opinions have also been guided by my appreciation of how a person of ordinary skill in the art, as defined below, would have understood the claims and the specification of the '425 Patent at the time of the alleged invention.

16. As I discuss in detail below, it is my opinion that the prior art cited by Petitioner

fails to disclose or render obvious the Challenged Claims, including at least independent Claim 1 of the '425 Patent. In particular, it is my opinion that Petitioner has not demonstrated that the following Grounds render the Challenged Claims unpatentable:

- Ground 1 – Anticipation of Claims 1-21 by Carrier
- Ground 2 – Obviousness of Claims 1-7 and 12-19 by Truxor in view of Yoon or Carrier
- Ground 3 – Obviousness of Claims 1-7 and 12-19 by SenwaTec in view of Yoon or Carrier
- Ground 4 – Obviousness of Claims 1-21 by Puck in view of Bryham
- Ground 5 – Obviousness of Claims 1-21 by Puck in view of Bryham and Bennett-II
- Ground 6 – Anticipation of Claims 1-21 by Lyseng

IV. BACKGROUND ON FARM LAGOONS, MANURE AGITATION, AND SPREADING

17. This section describes the general operating environment described in the '425 Patent – farm lagoons and pits (i.e., manure lagoons).

18. It is common practice in livestock farming to wash animal manure into a pit or lagoon (hereafter "manure lagoon"). The manure stored in these manure lagoons is pumped out at regular intervals and applied as fertilizer to fields. During storage, the manure in a manure lagoon stratifies into layers, which often includes a hard crust on the surface. As a result, the manure in manure lagoons needs to be agitated from time to time, including before pump-out.

19. The most economic and common construction method for a manure lagoon involves creating a rectangular shaped earthen type of pond structure. This structure usually has steep side walls with bank slopes from 2:1 to 3:1 [EX2019, p. 4] and sometimes will have a shallower concrete apron for machinery access. The manure lagoon needs to be constructed such that the sides and bottom are sufficiently impermeable to protect groundwater. EX2019, p. 4. Methods and materials to provide this barrier will vary by geographic location and soil type. The magnitude of these manure lagoons will vary based on the livestock herd size and annual local

rainfall. It's not uncommon for modern day manure lagoons to be quite large, reaching a surface area of multiple acres.

20. The Depeault reference (EX2003, U.S. Pat. No. 4,594,006), which was cited during prosecution and is listed on the face of the '425 Patent, further explains that the crust floating on the surface of manure lagoons can become relatively hard, can reach six feet in thickness, and has a consistency of dry peat moss:

2. Description of the Prior Art

Farm animal manure is a slurry containing liquids and solids in suspension. Such manure must be held in holding reservoirs near a barn such as in-the-ground tanks or lagoons. A by product of keeping animal manure is that it can, when required, be spread by suitable spreaders on fields as a fertilizer. The apparatus for spreading the manure normally comprises a closed tank mounted on a vehicle and communicating with a spreader. When required, the manure in the holding reservoir must be transferred into the spreading tanks by suitable pumps.

However, the manure in the holding reservoir tends to separate and the solids may settle to form a thick layer at the bottom of the reservoir and may also form a thick solid crust on the surface of the liquids. Such crust has a consistency of dry peat moss and must therefore be broken up before it can be mixed with the liquid into a slurry and be transferred from the reservoir into the spreading apparatus. It is necessary, therefore, to provide an apparatus for both mixing the solids and forming a slurry with the liquids in the reservoir as well as to have a pumping apparatus for pumping the so-formed slurry into the tank for the spreading apparatus.

Canadian Pat. No. 1,126,257 issued June 22, 1982, describes a proposed solution to the problem by providing a combined slurry mixing device and pump for the purpose of transferring the slurry to some other holding means such as a tank on a spreading apparatus.

There are other patents which describe generally devices for mixing manure in reservoirs for forming a slurry and then pumping the slurry. One of the problems which still exist even in the light of the solutions mentioned above, is the breaking up and mixing of the top crust. The top crust in the reservoir is mostly cow manure. This upper or floating crust can become relatively hard and can reach six feet in thickness. It causes a problem from a mixing point of view since as shown in Canadian Pat. No. 1,126,257, the mixing devices are normally provided at the bottom of the apparatus and near the bottom of the reservoir. In the case of the above mentioned Canadian patent, a nozzle is provided for diverting recirculated slurry as a jet towards the upper crust to try and break the crust. However, it has been found with conventional mixing devices including the above mentioned Canadian patent, that the breaking up of the upper crust and the mixing thereof is very time consuming and therefore, can be costly.

EX2003, U.S. Pat. No. 4,594,006, col. 1, ln. 13-58.

21. Manure lagoons are also unique in that the contents of a manure lagoon need to be agitated into as much of a homogenous mixture as possible across the entire lagoon so that the consistency, nutrients, and chemical distribution (e.g., pH) is as uniform as possible. This uniform consistency makes it easier for the manure pumping systems to work as efficiently as possible while also producing a consistent manure product. A homogenous manure product is preferred from an agronomic standpoint as farmers will reduce or eliminate the need for synthetic fertilizers applied to their crop production fields based on the nutrient quality of the manure. If the nutrient consistency of the manure product is highly variable the product will have less economic value and might even cause environmental harm if nutrient content is higher than can be retained by the soils and plants. *See* EX2019, pp. 1, 7.

22. These aspects present a unique operating environment for manure agitation vehicles.

23. In the 2013-2014 time period (which coincides with the dates when the Patent

Owner filed its provisional application and PCT application), farmers agitated manure lagoons with either pumps situated at the edge of the manure lagoon, which were typically driven by the PTO of an agricultural tractor (*see, e.g.*, the manure pump described in Depeault [EX2003]) or floating manure agitation "boats" (*see, e.g.*, the vehicle described in Puck [EX1014]).

24. In the 2013-3014 time period, floating manure agitation "boats" were barge-like structures that had to be launched and retrieved using a trailer and/or tractor. This is depicted in the screenshots attached as EX2008 and copied below, which are from a video taken by the Progressive Dairyman publication of a manure agitation boat demonstration held in 2014.

25. On October 2, 2023, I personally accessed and viewed this Progressive Dairyman video, which is posted on YouTube at the following link: https://www.youtube.com/watch?v=FXRS-9Ip1pE. The YouTube website indicates that this video was posted on July 9, 2014 by Progressive Dairy and that it has received around 69,000 views.

26. On October 2, 2023, I took screenshots from this Progressive Dairyman video and compiled them as EX2008. I therefore certify that the screenshots shown in EX2008 are true and correct images of the Progressive Dairyman video identified in the paragraph above.

27. The Progressive Dairyman video shown in EX2008, states that the manure agitation boat demonstration that is depicted in the video was held in Durand, Wisconsin during the month of June, 2014.

28. Notably, this manure agitation boat demonstration featured traditional manure agitation boats, including the commercial embodiment of the Puck reference [EX1014], alongside the Patent Owner's newly-released amphibious manure agitation vehicle:

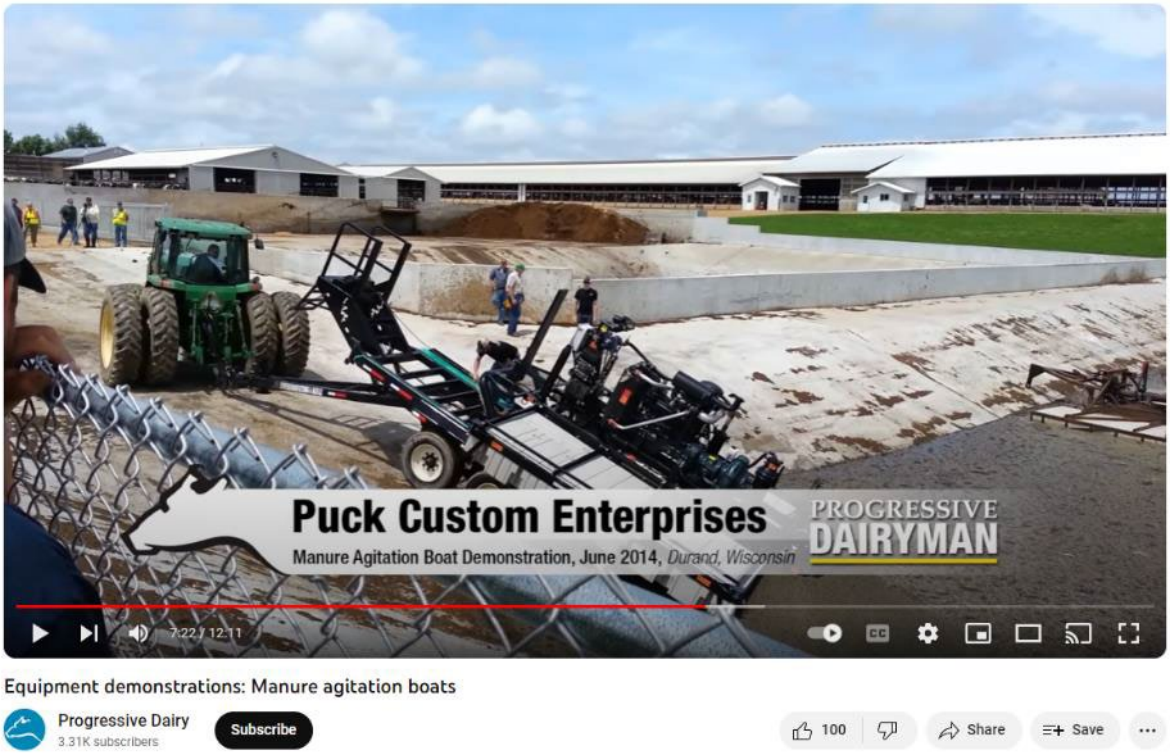
Puck Custom Enterprises
Manure Agitation Boat Demonstration, June 2014, Durand, Wisconsin
PROGRESSIVE
DAIRYMAN
7:22 / 12:11
Equipment demonstrations: Manure agitation boats
Progressive Dairy
3.31K subscribers
Subscribe
100
Share
Save

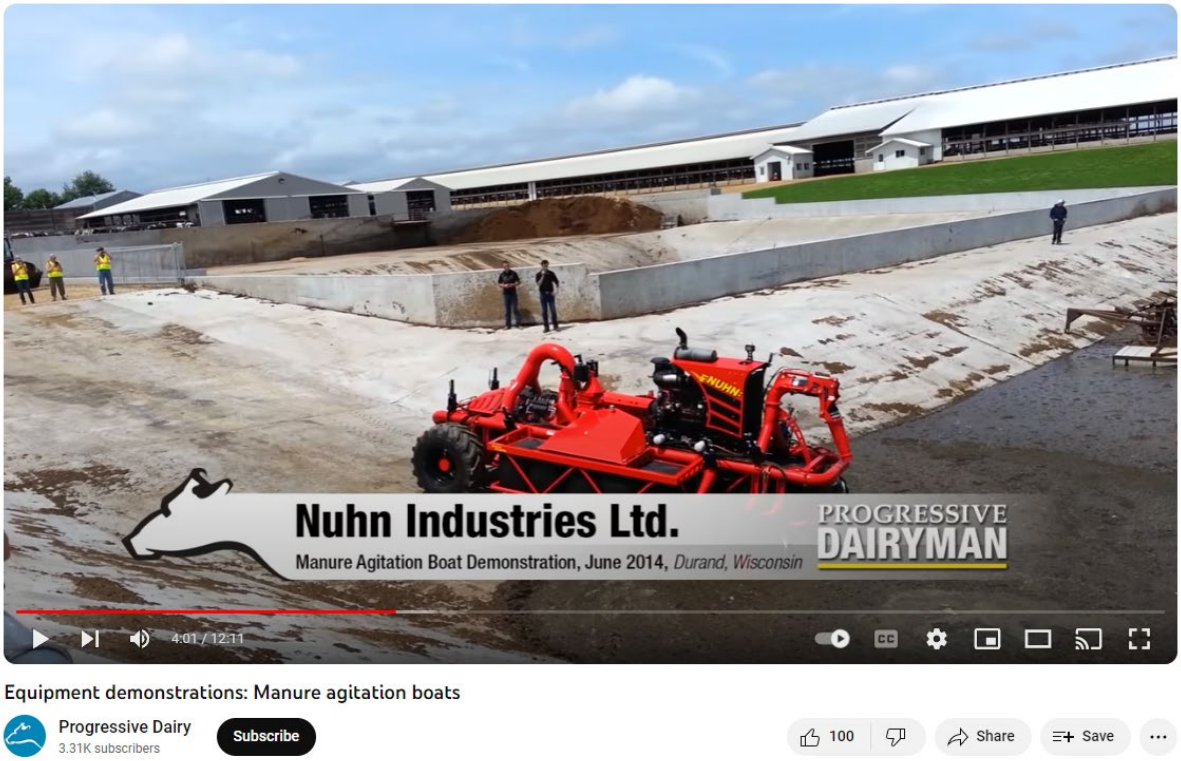
Nuhn Industries Ltd.
Manure Agitation Boat Demonstration, June 2014, Durand, Wisconsin
PROGRESSIVE
DAIRYMAN
4:01 / 12:11
Equipment demonstrations: Manure agitation boats
Progressive Dairy
3.31K subscribers
Subscribe
100
Share
Save

EX2008, pp. 4-5.

29. As this video illustrates, the Patent Owner's commercial embodiment of the '425 Patent was the first of its kind and was the only amphibious manure agitation vehicle that could be driven into, operated within, and driven out of the manure lagoon by wireless remote control – meaning that it did not require a tractor and/or trailer for launching and retrieval.

30. The North American Manure Expo is an annual industry trade show and educational event focused on livestock manure technologies. The Manure Expo brings together livestock producers, industry professionals, and equipment providers from across the country with the sole focus of livestock manure management. Their most recent exhibitors list, which is posted on their website at https://www.manureexpo.ca/, identifies only companies that are focused on livestock manure management, including lagoon management and agitation systems. I was unable to find any product or service on this list associated with marine dredging, which are the types of products cited by the Petitioner.

31. On October 2, 2023, I took screenshots from the North American Manure Expo website and compiled them as EX2020. I therefore certify that the screenshots shown in EX2020 are true and correct images of the North American Manure Expo website identified in the paragraph above.

32. The Truxor and SenwaTec references [EX1006] and [EX1012] cited by the Petitioner do not show that it would have been obvious for equipment designed for marine dredging to be used to pump and agitate livestock manure lagoons. Dredging, by dictionary definition, is "to dig, gather or pull out with or as with a dredge" or "to deepen (a waterway) with a machine that removes earth usually by buckets on an endless chair or suction tube". EX2021, p. 2. Dredging equipment is designed to excavate solids from the bottom of shallow bodies of water and transfer those solids to another location. Its design purpose is NOT to agitate and break-up both bottom solids and floating surface crust with the intention of creating a homogenous slurry throughout the entire pond/lagoon like that is desired in a manure lagoon prior to pump-out.

33. As noted, dredging is to dig, excavate, or remove solids from the bottom of shallow

bodies of water and transfer those solids to another location, whereas agitation, by definition, is the "act or an instance of agitating something: a moving back and forth or with an irregular, rapid, or violent action". EX2021, p. 2. Unlike with dredging, the agitation of a manure lagoon recirculates suspended solids rather than removing them from the lagoon. EX2021, p. 3.

34. The Petitioner also discusses municipal waste lagoons and livestock manure lagoons as if they were the same thing. The reality is that a municipal lagoon is NOT the same as a livestock manure lagoon. In the treatment of human waste, sewer systems are designed to carry human waste, including from domestic, industrial, and commercial sources, to wastewater treatment facilities. EX2022, p. 9. Typical wastewater treatment facilities for the treatment of human waste include a primary treatment stage and a secondary treatment stage. EX2022, p. 9. In the primary treatment stage, "[c]oarse solids are removed from the wastewater." EX2022, p. 9. Additionally, typical wastewater treatment facilities utilize preliminary treatment units before the primary and secondary treatment stages. EX2022, p. 9. During the preliminary treatment, a "screen removes large floating objects, such as rags, cans, bottles and sticks that may clog pumps, small pipes, and down stream processes. The screens vary from coarse to fine and are constructed with parallel steel or iron bars with openings of about half an inch, while others may be made from mesh screens with much smaller openings." EX2022, p. 9. Following screening, the wastewater flows "into a grit chamber where sand, grit, cinders, and small stones settle to the bottom," and this grit and screenings are periodically collected and removed from the system. EX2022, p. 10. After screening, primary sedimentation takes place. EX2022, p. 11. At that point, "wastewater still contains dissolved organic and inorganic constituents along with suspended solids." EX2022, p. 11. Therefore, the wastewater enters a sedimentation tank, at which point the water is slowed down and the suspended solids gradually sink to the bottom of the tank and form a mass of solids called primary sludge. EX2022, p. 11. This primary sludge is removed from the sedimentation tank. EX2022, p. 11. After the primary treatment process is the secondary treatment stage, during which "up to 90 percent of the organic matter in wastewater" is removed "by using biological treatment

processes," such as through attached growth processes and/or suspended growth processes. EX2022, pp. 11. It is during this secondary stage, after coarse solids, grit, sand, and suspended solids have already been removed from the wastewater, that a municipal lagoon may be employed to use "sunlight, algae, bacteria, and oxygen to interact" to "improve water quality" and "purify wastewater." EX2022, pp. 13-14, 27. As such, a municipal lagoon is typically placed at the end of the wastewater treatment process and is primarily meant to disinfect the water before it's released back to the environment:

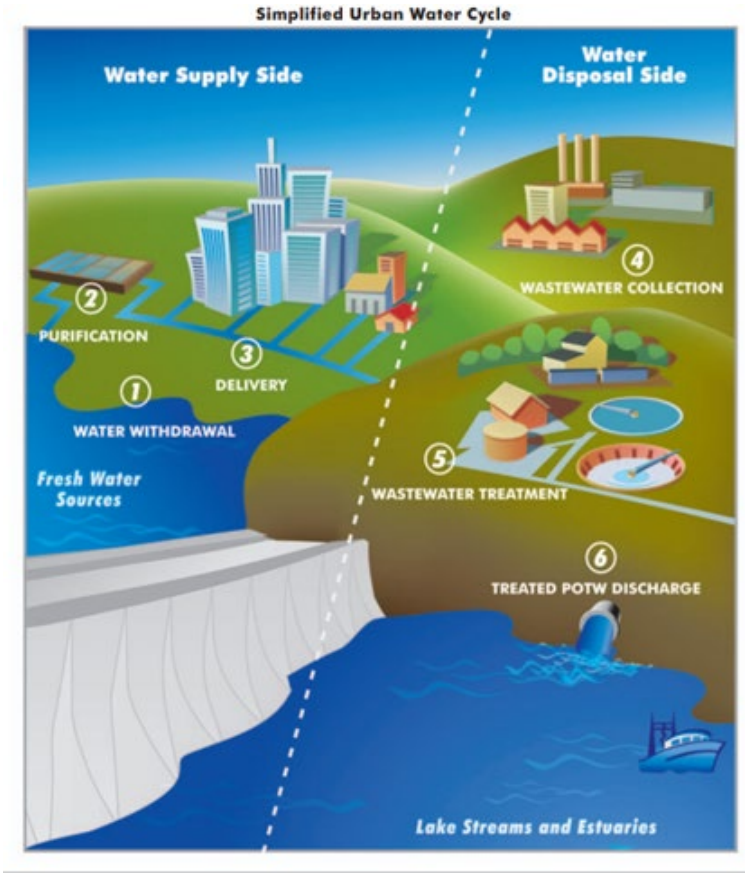

EX2022, p. 7. This multi-step process to remove solids and sediment from human waste *before* being deposited into a municipal waste lagoon is much different than the process of filling livestock manure lagoons. Specifically, a livestock manure lagoon receives its material directly from the livestock barn and often includes water, livestock feed, bedding, sand, livestock feces, and livestock urine:

Figure 9–5 Confinement area with curbing

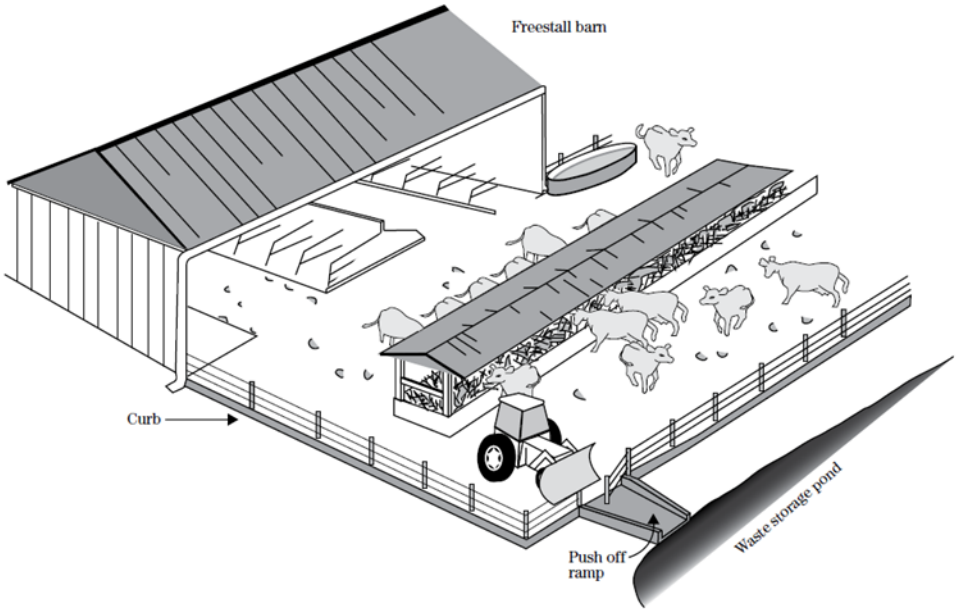

EX2023, p. 13, Figure 9-5. These materials stratify once they enter the manure lagoon and need to be periodically agitated to allow effective biological breakdown and removal. A large amount of the solids and debris found in manure lagoons is bedding material, such as straw and sand, that sticks to the manure and gets washed into the manure lagoon. When this material settles out, the straw floats, contributing to the surface crust, and the sand sinks to the bottom. EX2019, p. 5. Due to the differences between the composition and treatment of human waste versus animal manure, a POSITA would have understood that the requirements for pumping human waste in a municipal sewage lagoon or pond is different than the requirements for pumping manure in a manure lagoon.

V. OVERVIEW OF THE '425 PATENT

35. The '425 Patent, titled "AMPHIBIOUS PUMPING VEHICLE," issued on June 14, 2022, from U.S. Patent Application No. 17/590,125, which was filed on February 1, 2022. The '425 Patent claims priority to U.S. Provisional Patent Application No. 61/867,598, which was filed on August 19, 2013. EX1001, '425 Patent, pp. 1-2.

36. There are a total of 21 claims in the '425 Patent, all of which have been challenged in the Petition. Claim 1, which is copied below, is the sole independent claim:

1. An amphibious vehicle comprising:

a floatable vehicle body;

ground engaging propulsion structure comprising a plurality of ground engaging elements powered by a hydraulic motor;

a fluid pump for pumping liquid manure;

a power source connected to a hydraulic pump, the power source configured to provide power to both the ground engaging propulsion structure and the fluid pump; and,

a wireless remote control configured to enable an operator who is remote from the vehicle to: (1) control the ground engaging propulsion structure; (2) control a flow of liquid manure from the fluid pump; (3) control at least one of the speed and direction of the vehicle when the vehicle is ground engaging; and, (4) control at least one of the speed and direction of the vehicle when the vehicle is floating.

EX1001, col. 8, ln. 36-52.

37. The "BACKGROUND" section of the '425 Patent explains that animal manure produced by cattle and hogs is typically washed into a manure lagoon for storage and later pump out for land application as fertilizer:

BACKGROUND

Manure produced during animal husbandry, particularly hog and cattle manure, is transferred by washing to a pit or lagoon for storage prior to removal for land application or further processing. During storage, a crust can develop on the surface of the pit or lagoon that must be disrupted prior to or during removal of the manure. Pumps are employed for this purpose with jets that return a percentage of the manure back to the pit or lagoon in the form of a high volume spray to disrupt the crust and recirculate the manure. Pumps for use in recirculating manure from smaller pits are known; however, these pumps are typically suitable for accessing the pit or lagoon from its edge and are connected to a tractor or similar land vehicle for operational power. They are therefore limited in their ability to recirculate manure to the middle of large lagoons, which are becoming increasing common as the size of animal husbandry operations increases.

EX1001, '425 Patent, col. 1, ln. 33-49. As explained above, one unique problem that occurs with manure lagoons is that over time a floating "crust" develops on the surface of the manure lagoon that must be disrupted (i.e., broken up) before pump out.

38. The '425 Patent specification explains that operation of the claimed amphibious vehicle in a manure lagoon disrupts the crust and recirculates the manure:

> In operation, an operator uses the remote controls to maneuver the vehicle to the lagoon entrance, drive the vehicle into the lagoon, raise the ground engaging propulsion structure (wheels), lower the fluid pump, begin pumping fluid with the fluid pump through the fluid conduits and selectively open at least the second fluid nozzles to cause the vehicle to move out on to the surface of the lagoon. The valves associated with the side fluid nozzles may also be opened or closed to provide directional control of the vehicle on the lagoon. Once the vehicle is in the desired position, the valves associated with the first fluid nozzle are opened and the first articulation structure is used to position the first fluid nozzle at a desired angular orientation relative to the vehicle body. This is generally an upward orientation so that the fluid is sprayed widely to break crusts of material floating on the surface of the lagoon. In this manner, fluid is recirculated and directed to desired locations in the lagoon. As fluid is emptied from the lagoon, the floating vehicle is permitted to lower with the fluid level. When the lagoon has been sufficiently emptied, the operator is able to reverse the foregoing process in order to maneuver the vehicle to the lagoon exit, lower the wheels, and drive the vehicle up the muddy bank out of the lagoon.

EX1001, '425 Patent, col. 8, ln. 5-27.

39. After reading the entire disclosure, a POSITA would come away with the understanding that the amphibious vehicle claimed in the '425 Patent is not a general-purpose amphibious vehicle, but rather is one that is specially adapted for the particular purpose of breaking up the crust that forms on the surface of manure lagoons and recirculating the manure in manure lagoons.

VI. COMMERCIAL EMBODIMENTS

40. Nuhn has its own YouTube channel with videos showcasing its products. On October 2, 2023, I personally accessed and viewed a video showcasing Nuhn's Lagoon Crawler,

which is posted on YouTube at the following link:

https://www.youtube.com/watch?v=fEgvvq9HZkk

The YouTube website indicates that this video was posted on November 6, 2014 by Nuhn and that it has received around 42,000 views.

41. On October 2, 2023, I took screenshots from this video of Nuhn's Lagoon Crawler and compiled them as EX2006. I therefore certify that the screenshots shown in EX2006 are true and correct images of the Nuhn video identified in the paragraph above.

42. Below is a screenshot taken from a video of Nuhn's Lagoon Crawler, which I understand to be the Patent Owner's commercial embodiment of the '425 Patent, breaking up the surface crust formed on a manure lagoon:

EX2006, p. 2.

43. Like Nuhn, Bazooka-Farmstar ("Bazooka") also has its own YouTube channel with videos showcasing its products. On October 2, 2023, I personally accessed and viewed a video

showcasing Bazooka's Wolverine Agitation Boat, which is posted on YouTube at the following link:

https://www.youtube.com/watch?v=3y3bSJJUOps

The YouTube website indicates that this video was posted on July 11, 2021 by BazookaFarmstar and that it has received around 6,000 views.

44. On October 2, 2023, I took screenshots from this video of Bazooka's Wolverine Agitation Boat and compiled them as EX2007. I therefore certify that the screenshots shown in EX2007 are true and correct images of the BazookaFarmstar video identified in the paragraph above.

45. Below is a screenshot taken from a video of Bazooka's Wolverine Agitation Boat, which I understand to be the accused product in the underlying litigation, breaking up the surface crust formed on a manure lagoon:

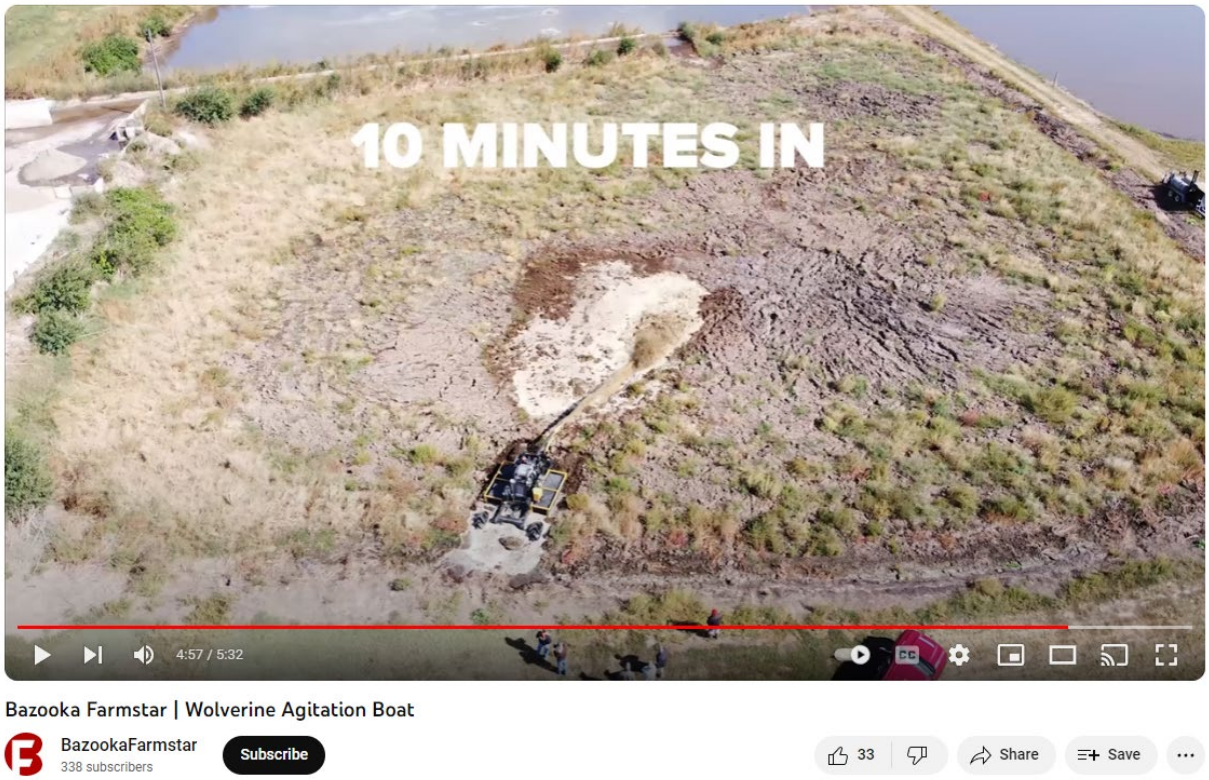

EX2007, p. 3.

46. As these videos demonstrate, the crust that forms on the surface of manure lagoons can become quite dense and overgrown with grass and other plants, making agitation and pump-out difficult.

VII. APPLICABLE LEGAL STANDARDS AND PRINCIPLES

47. I am not an attorney and do not purport to offer legal opinions. In forming my opinions, however, I have been asked to apply certain standards pertaining to the patentability issues presented in this proceeding that I know from my experience as an inventor and expert witness or were provided to me by counsel for the Patent Owner.

48. I understand that for a patent to be valid, the invention claimed in the patent must be new, useful, and non-obvious. I understand that, in this *inter partes* review, the Petitioner has the burden of proving that each challenged claim is unpatentable by a preponderance of the evidence.

A. The Prior Art

49. I understand that applicable patent law provides categories of information that constitute prior art that may be used to "anticipate" patent claims or to render them "obvious." I understand that for a reference to qualify as "prior art" in an *inter partes* review, the reference must have been published, patented, or must have been the subject of a patent application by another person, before the priority date of the patent, and in this matter, must satisfy one of the standards of 35 U.S.C. § 102.

B. Anticipation

50. I understand that a claim of a patent is invalid if the claimed invention is not new. I understand that the scope of prior art is limited in *inter partes* reviews. It is my understanding that a claimed invention is not new if all the limitations of the claim are described in a single prior art reference, and as arranged in the claim.

51. I understand that the prior art reference does not have to use the same words as

those used in the claim, but that all the limitations must be present, either expressly or inherently, so that a person having ordinary skill in the art viewing the reference would have everything necessary to make and use the invention as claimed. I understand that something is inherent in a prior art reference if it necessarily exists in the prior art reference.

52. Therefore, it is my understanding that a single prior art reference that discloses each requirement of a claim, either expressly or inherently, invalidates the claim by anticipation.

C. Obviousness

53. I understand that a claim is unpatentable if the differences between the claim and the prior art are such that the claimed subject matter as a whole would have been obvious to a person having ordinary skill in the art. Obviousness may be shown by a single prior art reference or by a combination of prior art references.

54. Although I understand that a finding of obviousness may be based upon combining prior art references, I also understand that a patent claim may not be proved obvious merely by demonstrating that each of its limitations was independently known in the prior art. I further understand that there must be a motivation to combine elements of the prior art in the manner claimed. I also understand that a claim cannot be found obvious based on a hindsight combination of components selected from the prior art using the patent claims as a roadmap.

55. I further understand that in determining whether a prior art reference would have been combined with other prior art, a showing must be made that a person of ordinary skill in the art would have a reasonable expectation that the asserted combination could be made successful and would achieve the claimed invention.

56. In determining whether a claim would have been obvious, I understand that obviousness is determined from the perspective of a person having ordinary skill in the art in the field of the claimed invention. I understand that as part of my analysis of whether a given patent claim is obvious, I should consider: (1) the level of ordinary skill in the pertinent art; (2) the scope and content of the prior art; (3) the differences, if any, between the prior art as a whole and the

claim at issue; and (4) as appropriate, secondary considerations of non-obviousness.

VIII. PERSON OF ORDINARY SKILL IN THE ART

57. I understand that Petitioner asserts that a person of ordinary skill in the art ("POSITA") for the technology underlying the '425 Patent would have had "a bachelor's degree in mechanical engineering or similar field, and two years of professional experience in marine and off-road vehicles. A [POSITA] would have had a working knowledge of fluid pumps and livestock manure." Petition, p. 31; EX1004, Winkel Decl. ¶82. Petitioner also states that a "[l]ack of work experience can be remedied by additional education, and vice versa." *Id*.

58. I disagree with the Petitioner's definition of a POSITA because it excludes those most familiar with manure agitation equipment – livestock farmers and commercial manure applicators. A commercial manure applicator is a person who is employed by a business entity engaged in the business of transporting, handling, storing, or applying manure for a fee. *See* EX2024.

59. The Petitioner's definition of a POSITA is overly generic and made without reference or regard to the sole application for the claimed vehicle – manure lagoon agitation/pumping.

60. The '425 Patent repeatedly mentions "animal husbandry" (i.e., livestock farming operations) and the problems encountered when storing and pumping animal manure in farm lagoons or pits. EX1001, '425 Patent, col. 1, ln. 26-49; col. 3, ln. 14-21; col. 7, ln. 20-46; col. 8, ln. 5-25.

61. Moreover, the '425 Patent has been classified as being directed to "amphibious vehicles specially adapted for particular purposes" and "manure" handling:

Classifications

- B60F3/0061 Amphibious vehicles specially adapted for particular purposes or of a particular type
- A01C23/045 Filling devices for liquid manure or slurry tanks
- A01C3/026 Storage places for manure, e.g. cisterns for liquid manure; Installations for fermenting manure with mixing or agitating devices

EX2009, p. 2.

62. The '425 Patent does not suggest that the claimed vehicle finds utility in doing anything other than operating in manure lagoons.

63. Based on this intrinsic evidence, it is my opinion that a POSITA is "a livestock farmer or commercial manure applicator familiar with manure agitation equipment or an engineer with at least 2 years of experience designing agricultural equipment and knowledge of manure agitation equipment."

64. All of my opinions in this declaration are from the perspective of a POSITA, as I have defined it in the preceding paragraph, during the relevant timeframe of August, 2013.

IX. CLAIM CONSTRRCTION

65. I understand that in an *inter partes* review proceeding, the claim terms are to be construed in accordance with the ordinary and customary meaning of such term as understood by a POSITA. I understand that when interpreting the claims, the primary focus must be on the intrinsic evidence, which consists of the claim language, the specification, and the prosecution history. I further understand that extrinsic evidence, such as definitions found in dictionaries and handbooks, is less pertinent and persuasive than the intrinsic evidence. I also understand that express definitions of terms in the patent should govern the construction of the claims. I have followed these claim construction principles in my analysis.

66. I have given particular consideration of two limitations from the Challenged Claims of the '425 Patent: the phrase "a fluid pump for pumping liquid manure" and relatedly the term

"liquid manure."

A. "a fluid pump for pumping liquid manure"

67. It is my understanding that Petitioner argues that the words "for pumping liquid manure" in this claim limitation is a recitation of "intended use" that does not limit the scope of the Challenged Claims and can be ignored in a patentability analysis. Petition, pp. 6 and 31-32. This does not make sense to me.

68. It is my opinion that a POSITA would not simply ignore the portion of this claim limitation reciting the function "for pumping liquid manure" because it is clear that the '425 Patent is generally directed to an amphibious vehicle whose sole purpose is pumping/agitating the manure in a manure lagoon. *See, e.g.*, EX1001, '425 Patent, col. 1, ln. 24-29, col. 1, ln. 33-52, col. 3, 14-21, col. 8, ln. 5-27.

69. In my opinion, a POSITA would not focus on the more general language of "amphibious pumping vehicle" found in the title of the '425 Patent, the preamble of Claim 1, which recites an "amphibious vehicle," and the first sentence in the TECHNICAL FIELD section as the Petitioner has done and arrive at the conclusion that the '425 Patent covers any amphibious pumping vehicle, given that the overall context of the '425 Patent is manure agitation. The inventor describes the problem to be solved by the '425 Patent as disrupting the crust and recirculating the manure in large manure lagoons where pumping from the edge of the lagoon is ineffective. EX1001, '425 Patent, col. 1, ln. 33-52. A POSITA would understand that the solution the inventor provides to this problem is the claimed amphibious vehicle. The inventor describes operating the claimed amphibious pumping vehicle in manure lagoons only and does not mention any other operating environment or purpose. EX1001, '425 Patent, col. 8, ln. 5-27. Based on this context, a POSITA would not ignore the references to "liquid manure" in the claims.

70. To the contrary, it is my opinion that, after reviewing the prosecution history, a POSITA would interpret the claim limitation requiring "a fluid pump for pumping liquid manure" as "a fluid pump that pumps manure." This is opposed to a pump that is merely capable of pumping

liquid manure in the theoretical sense if someone attempted to put a pump to that use. In particular, a POSITA would see and rely on the fact that during *ex parte* reexamination, the USPTO found the Challenged Claims to be allowable because the prior art did not disclose "a pump that pumps manure":

Reexamination

STATEMENT OF REASONS FOR PATENTABILITY AND/OR CONFIRMATION

The following is an examiner's statement of reasons for patentability and/or confirmation of the claims found patentable in this reexamination proceeding: claims 1-21 are allowed over the art cited with the request. The examiner has considered and found persuasive the arguments that a pump that pumps manure has different requirements than one that pumps water. These arguments were submitted with the response to the first action in reexamination 90/019,076 that stems from the grandparent application of this patent. Further, without impermissible hindsight, there would not be proper motivation to combine a device like Carrier with a device like Puck. Therefore, the examiner has determined that the prior art does not reasonably show an amphibious vehicle that can be mobile on both land and liquid that pumps manure, in combination with the other claimed elements.

EX1038, p. 6.

71. It is also my understanding that this claim limitation follows a format that may be construed as a means-plus-function limitation under 35 U.S.C. § 112(f). It is my understanding that this is a legal question that is based on the following underlying factual determinations: (1) whether the words of the claim are understood by persons of ordinary skill in the art to have a sufficiently definite meaning as the name for structure, and (2) what structure is disclosed in the specification for performing the claimed function. I am not providing an opinion on the overall legal question of whether this phrase is a means-plus-function limitation, but I have provided my opinion below on underlying factual determinations (1) and (2).

72. With respect to point (1), it is my opinion that the term "fluid pump" by itself does not connote any particular structure. Standing alone, a "fluid pump" is any component or system

for pumping a liquid or a gas.

73. Indeed, fluid pumps are commonly represented as generic black box symbols in engineering schematics.

74. As a result, it is my opinion that a POSITA would not appreciate any discernable difference between the claimed phrase "a fluid pump for pumping liquid manure" and the phrase "means for pumping liquid manure." In other words, both phrases would mean the same thing to a POSITA.

75. With respect to point (2), a POSITA would understand that the following passages from the '425 Patent specification describe the structure that performs the claimed function of "pumping liquid manure:"

> 65 at the same or different rotational speeds.
> The fluid pump may comprise a pump housing configured for immersion within the fluid. The pump housing may
>
> **3**
>
> comprise a bottom fluid inlet and at least two tangential fluid outlets. A greater number of tangential fluid outlets may be provided, for example three fluid outlets. The tangential

EX1001, '425 Patent, col. 2, ln. 66 – col. 3, ln. 2.

> Referring to FIG. **8**, the fluid pump **9** comprises a pump 20
> housing **18** comprising three tangential fluid outlets **19** that are connected via flexible pump outlet conduits **33** to a combiner **34** that is used to combine the fluid output of the tangential fluid outlets **19** into the single conduit **20**. A pump actuation cylinder **35** is provided to cause raising and 25
> lowering of the pump **9** and especially the pump housing **18** relative to the vehicle body **1**. A telescoping pump support structure **36** is provided for use in combination with the pump actuation cylinder **35**. A mechanical drive shaft (not shown) runs through the telescoping pump support structure 30
> **36** to provide power to the pump impeller **37**. When powered, the impeller **37** draws the fluid to be pumped through an enlarged bottom fluid opening **38** of the pump housing **18**.

EX1001, '425 Patent, col. 7, ln. 20-33.

76. In view of the above excerpts for the '425 Patent specification, it is my opinion that a POSITA would identify the following structure as the structure the specification describes for pumping liquid manure: "a pump housing configured for immersion within the liquid manure, the pump housing has a bottom fluid inlet and at least two tangential fluid outlets, and an impeller that draws the liquid manure to be pumped through the bottom fluid inlet of the pump housing."

B. "liquid manure"

77. It is my understanding that Petitioner argues that the words "liquid manure" in the Challenged Claims of the '425 Patent means "manure with less than 5 percent suspended solids." Petition, pp. 34-35. I also disagree with this claim construction.

78. Petitioner's definition for "liquid manure" comes from a waste management handbook that appears to be extrinsic evidence because the handbook was not referenced in the '425 Patent specification, on the face of the '425 Patent, or during prosecution.

79. Moreover, the classifications found in this handbook are simply a suggested guideline with which to classify manure consistencies as either liquid, slurry, semisolid or solid from a handling characteristic for different livestock categories.

80. Several prior art patents cited on the face of the '425 Patent also use the term "liquid manure" in describing their inventions. These patents use the term "liquid manure" to broadly refer to the contents of a manure lagoon as opposed to narrower formulations based on the percentage of total solids (%TS) like in the Petitioner's construction. *See, e.g.*, US9462741B2 to Puck [EX2013]; US9572297B2 to Puck [EX2014]; DE2364962A1 to Kronseder [EX2015][1]; DE3431345A1 to Lüllmann [EX2016][2]. Nor do the other patents cited on the face of the '425 Patent that describe manure agitation equipment limit the scope of their inventions based on the

[1] EX2015 is from the file history of the '425 Patent and corresponds to pp. 170-188 of EX1002.

[2] EX2016 is from the file history of the '425 Patent and corresponds to pp. 155-169 of EX1002.

percentage of total solids (%TS). *See* US4594006A to Depeault [EX2003]; CA2002619A1 to Depeault [EX2017]; US4406413A to Houle [EX2010]; US10118138B2 to Tews [EX2018]. Therefore, I do not see any evidence that anyone in the art has limited their manure agitation inventions in the way Petitioner is suggesting.

81. The waste management handbook [EX1066] referenced by the Petitioner discusses handling characteristics of different categories of manure. What the referenced figure (Figure 12-92) does not fully reflect is that manure agitation equipment must be capable of pumping all of the different classes of manure shown in Figure 12-92, because they may all be present in a manure lagoon when agitation is needed. This is due to the fact that manure typically becomes **stratified and settled out** over time. When agitation begins, the manure in the manure lagoon is not yet mixed and can consist of pure liquid, solids at the bottom, localized solid buildup, and a grassy field-like crust on the top. The intent of manure agitation equipment such as that shown in the '425 Patent specification is to be able to break up and agitate all manure categories from liquid through solids, where they are all mixed together during the agitation process. The well-mixed contents of the manure lagoon is then pumped out. As a result, manure agitation equipment must be capable of handling greater solids than manure pump-out equipment.

82. In my opinion, a POSITA would not apply the Petitioner's narrow definition of "liquid manure" to the '425 Patent, but instead would interpret the references to "liquid manure" in the '425 Patent claims as the "animal manure contained in a farm lagoon, which includes suspended solids."

83. A POSITA would arrive at this interpretation after seeing that the Patent Owner equates "liquid manure" to "animal manure contained in a farm lagoon" in the TECHNICAL FIELD section of the '425 Patent:

TECHNICAL FIELD

The invention relates to pumps and vehicles equipped for pumping. In particular, the invention relates to manure pumps and amphibious vehicles equipped for pumping liquid manure, such as animal manure contained in a farm lagoon.

EX1001, '425 Patent, col. 1, ln. 25-29.

84. The '425 Patent specification also explains that liquid manure stored in a manure lagoon has a crust formed on its surface and includes solid materials that can clog traditional pumps:

BACKGROUND

Manure produced during animal husbandry, particularly hog and cattle manure, is transferred by washing to a pit or lagoon for storage prior to removal for land application or further processing. During storage, a crust can develop on the surface of the pit or lagoon that must be disrupted prior to or during removal of the manure. Pumps are employed for this purpose with jets that return a percentage of the manure back to the pit or lagoon in the form of a high volume spray to disrupt the crust and recirculate the manure. Pumps for use in recirculating manure from smaller pits are known; however, these pumps are typically suitable for accessing the pit or lagoon from its edge and are connected to a tractor or similar land vehicle for operational power. They are therefore limited in their ability to recirculate manure to the middle of large lagoons, which are becoming increasing common as the size of animal husbandry operations increases.

Accordingly, there is a need for improved pumps and vehicles equipped for pumping, particularly pumps and vehicles suitable for use with large manure lagoons.

EX1001, '425 Patent, col. 1, ln. 33-53.

> telescoping connections to the single fluid conduit. Lowering the fluid pump for immersion into the fluid obviates the need for priming the fluid pump, which can be problematic when the fluid is manure comprising solid materials that can plug the pump or priming structure. Immersion of the pump also simplifies intermittent operation of the pump, due to eliminating potential loss of prime, and reduces the need for pump maintenance.

EX1001, '425 Patent, col. 3, ln. 14-21.

> In operation, an operator uses the remote controls to maneuver the vehicle to the lagoon entrance, drive the vehicle into the lagoon, raise the ground engaging propulsion structure (wheels), lower the fluid pump, begin pumping fluid with the fluid pump through the fluid conduits and selectively open at least the second fluid nozzles to cause the vehicle to move out on to the surface of the lagoon. The valves associated with the side fluid nozzles may also be opened or closed to provide directional control of the vehicle on the lagoon. Once the vehicle is in the desired position, the valves associated with the first fluid nozzle are opened and the first articulation structure is used to position the first fluid nozzle at a desired angular orientation relative to the vehicle body. This is generally an upward orientation so that the fluid is sprayed widely to break crusts of material floating on the surface of the lagoon. In this manner, fluid is recirculated and directed to desired locations in the lagoon. As fluid is emptied from the lagoon, the floating vehicle is permitted to lower with the fluid level. When the lagoon has been sufficiently emptied, the operator is able to reverse the foregoing process in order to maneuver the vehicle to the lagoon exit, lower the wheels, and drive the vehicle up the muddy bank out of the lagoon.

EX1001, '425 Patent, col. 8, ln. 5-27. These statements in the '425 Patent directly conflict with Petitioner's attempt to define "liquid manure" as having an extremely low percentage of solids. As such, POSITA would understand that the "liquid manure" described in the '425 Patent, includes solids and a surface crust.

X. OVERVIEW OF THE CITED ART

85. In this section I describe the references cited by Petitioner.

A. Carrier [EX1005]

86. Carrier teaches a general-purpose amphibious vehicle having various objectives, none of which are agricultural in nature. For example, Carrier describes one "objective is to provide a multi-purpose vehicle for National Security issues such as Sneek [sic] and Peek operations and Silent Search and Destroy Missions." EX1005, Carrier, ¶ [0015]. "Another objective is to provide a multi-purpose vehicle for Military and National Security issues such as Explosive Energy Defeat and Ballistic Armor Capabilities." EX1005, Carrier, ¶ [0016]. Carrier goes on to describe that its general-purpose amphibious vehicle can optionally be equipped with a water pump and water cannon for firefighting. EX1005, Carrier, ¶¶ [0060]-[0061]. In particular, Carrier states that an important feature of its vehicle is that "the tank, hoses, and pump may be readily removed from the vehicle through the use of quick-release devices." EX1005, Carrier, ¶ [0060].

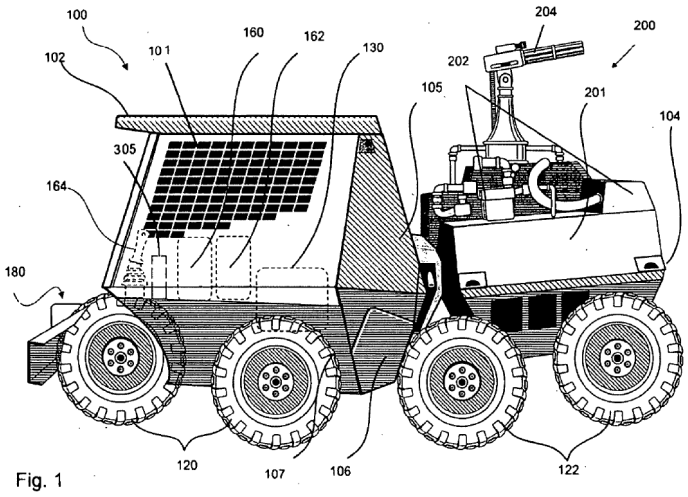

Fig. 1

87. Carrier describes that its vehicle has an "ability to transport a pump or other device to direct the water, foam and dry chemicals at the fire, as well as decontamination solutions for decon missions." *See* EX1005, Carrier, ¶ [0059]. The optional pump in Carrier is further described as "capable of pumping water from a lake or stream," not liquid manure from a farm lagoon. *See* EX1005, Carrier, ¶ [0061]. Carrier does not include any description that the pump has any capabilities beyond pumping water, foam, dry chemicals at a fire, or decontamination solutions.

Carrier does not state that its pump is capable of pumping liquid manure. And Carrier includes no description of the structure of its optional pump. Carrier makes no reference to manure, farm lagoons, or animal husbandry (livestock farming).

B. Truxor [EX1006]

88. Truxor describes an amphibious vehicle that is designed to carry an onboard operator and a number of different tool attachments. EX1006, Truxor, pp. 6-15. In particular, the tool attachments of Truxor includes aquatic weed cutters (EX1006, Truxor, pp. 6-7), rakes (EX1006, Truxor, pp. 8-9), buckets and log grabbers (EX1006, Truxor, p. 9), dredge pumps (EX1006, Truxor, pp. 10-11), excavators (EX1006, Truxor, p. 12), cultivators (EX1006, Truxor, p. 13), and oil decontamination tools (EX1006, Truxor, pp. 14-15). Truxor does not describe that its vehicle or its dredge pumps are used to pump manure or are even capable of pumping manure.

89. The vehicle in Truxor is advertised as being designed for weed removal and dredging. EX1006, Truxor, p. 1. Additionally, Truxor states: "Driven with care and with its minimal ground pressure, damage to river banks and sensitive areas can be minimised [, sic] making the *Truxor* ideal for working on golf courses, nature reserves and public parks where larger, heavier machines have difficulty operating." EX1006, Truxor, p. 2. Truxor makes no reference to manure, farm lagoons, or animal husbandry (livestock farming). Truxor also does not describe that any of its onboard controls can be operated by remote control.

C. SenwaTec [EX1012]

90. Like Truxor, SenwaTec discloses an amphibious vehicle that is designed to carry an onboard operator and a number of different tool attachments. EX1012, SenwaTec, p. 2. For example, SenwaTec's tool attachments include hydraulic augers, tree cutters, clearing and collecting rakes, t-cutter bars, mowing buckets, excavating buckets, suction augers, and centrifugal pumps. EX1012, SenwaTec, pp. 2-3. SenwaTec's marketing material does not describe that its vehicle or its centrifugal pumps are used to pump manure or are even capable of pumping manure.

EX1012, SenwaTec, p. 2.

91. The vehicle in SenwaTec is advertised as being designed for weed removal and dredging. EX1012, SenwaTec, p. 1. SenwaTec shows that it has at least 8 different control interfaces. EX1012, SenwaTec, p. 1. However, SenwaTec does not describe that any of its onboard control interfaces can be operated by remote control. Instead, SenwaTec describes that its cockpit has: "Conveniently and comfortably arranged operational control levers for easy operator's reach as well as monitoring instruments in clear view to the operator's position." EX1012, SenwaTec, p. 3. SenwaTec makes no reference to manure, farm lagoons, or animal husbandry (livestock farming).

D. Yoon [EX1010 and EX1011]

92. Yoon describes a remote-controlled vehicle with an onboard water pump 131:

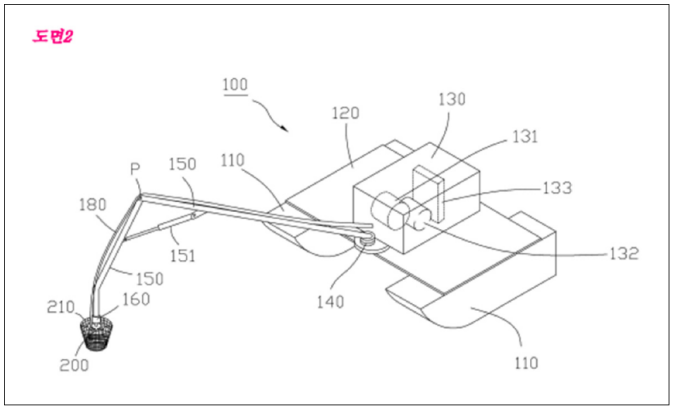

93. Yoon describes that its "invention is about an amphibious water treatment device that is installed at streams or on storage tanks, reservoirs, and so on, into which waste materials are dumped in order to treat industrial waste materials." EX1011, Yoon, ¶ [0001]. Yoon includes a main body 130 in which a water pump 131 is installed. EX1011, Yoon, ¶ [0047]. The water pump 131 of Yoon is not immersed in the storage tank or reservoir. Yoon's water pump 131 pumps wastewater and sludge from the storage tank or reservoir and into a water collection device 300, where it is "separated into wastewater and sludge." EX1011, Yoon, ¶ [0070]. Then, "the sludge separated from the stored water is collected by a sludge transportation car, which is not illustrated, and then treated." EX1011, Yoon, ¶ [0077]. Yoon only includes a generalized statement that "a remote receptor (not illustrated) is installed on the controller (133) installed on the main body (130) in order for the operator to control work using a remote controller from the land." EX1011, Yoon, ¶ [0048]. However, other than this generalized statement, Yoon provides no details as to how its remote control is designed or implemented.

E. Puck [EX1014]

94. Puck teaches a traditional manure agitation boat that must be launched and retrieved using a trailer:

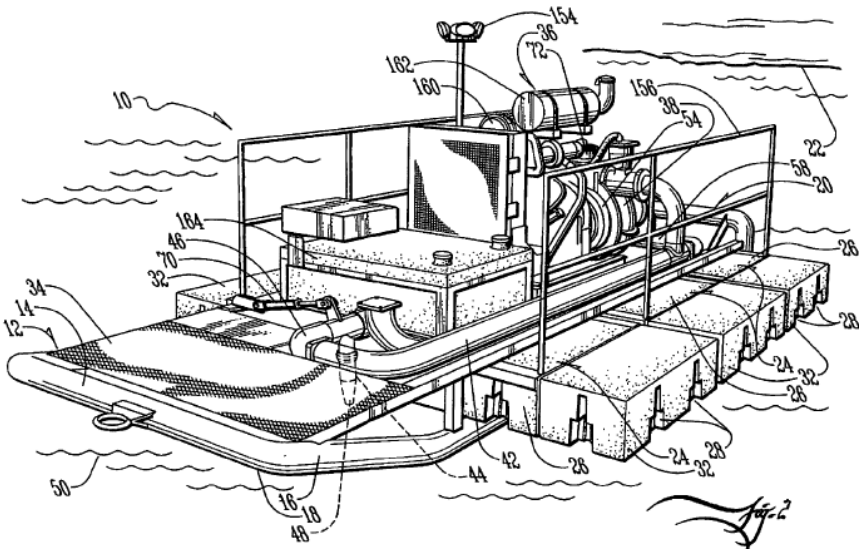

EX1014, Puck, p. 3, FIG. 2.

95. Puck describes that its vessel 12 includes modular dock sections 26. EX1014, Puck, Paras. [0022]-[0023]. Puck describes that it includes a slurry pump 38, which is a Cornell Redi-Prime centrifugal pump. EX1014, Puck, ¶ [0025]. Puck describes that the "slurry pump (38) is coupled to a liquid manure intake, such as a slurry intake, which is a downwardly directed intake pipe (40)" and that the "intake pipe (40) is constructed to extend about twenty-four inches below the surface of the lagoon (22)." EX1014, Puck, ¶ [0026]. Figures 1, 2, 6, and 8 of Puck show the slurry pump 38 with only a single inlet and a single outlet. EX1014, Puck, pp. 2, 3, 7, and 9. Figure 4 of Puck shows the slurry pump 38 above the manure lagoon 22 and above the crust 126. EX1014, Puck, p. 5. Puck does not include any ground engaging propulsion structure. Instead, Puck's agitation boat is "transported to the manure lagoon (22) using a trailer (132) and pulling vehicle (134)." EX1014, Puck, ¶ [0034]. Puck includes a remote control system 64, but because Puck lacks a ground engaging propulsion structure, Puck does not include any description that its remote control system 64 can control a ground engaging propulsion structure.

F. Bryham [EX1015]

96. Bryham describes a three-wheeled land propulsion and steering system that retracts into and extends out from a boat hull:

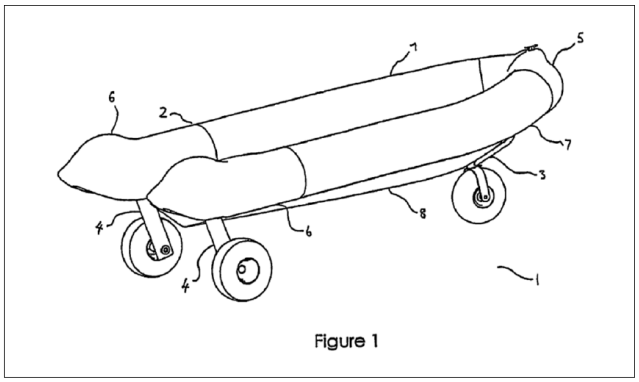

EX1015, Bryham, p. 2.

97. Bryham describes a vee-boat hull with three wheels (one at the bow and two at the stern). In one embodiment, Bryham describes its boat as an "inflatable craft 2, fitted with a single nose undercarriage assembly 3 and two aft undercarriage assemblies 4, providing means for the craft to travel over land." EX1015, Bryham, p. 22, col. 11, ln. 56-59. Bryham also states that its craft includes fiberglass cowlings "towards the front of the craft and towards the rear 6," that the "cowlings are shaped to conform to the lines of the inflatable tubes 7," and that the undercarriage assemblies 3 and 4 can be "retracted and stowed within the cowlings 5 & 6." EX1015, Bryham, p. 22, col. 11, ln. 59 – col. 12, ln. 4. Bryham does not describe any sort of remote control. Nor does Bryham makes any reference to manure, farm lagoons, or animal husbandry (livestock farming).

G. Bennett-II [EX1017]

98. Bennett-II describes a general-purpose amphibious vehicle that has a pair of tracks:

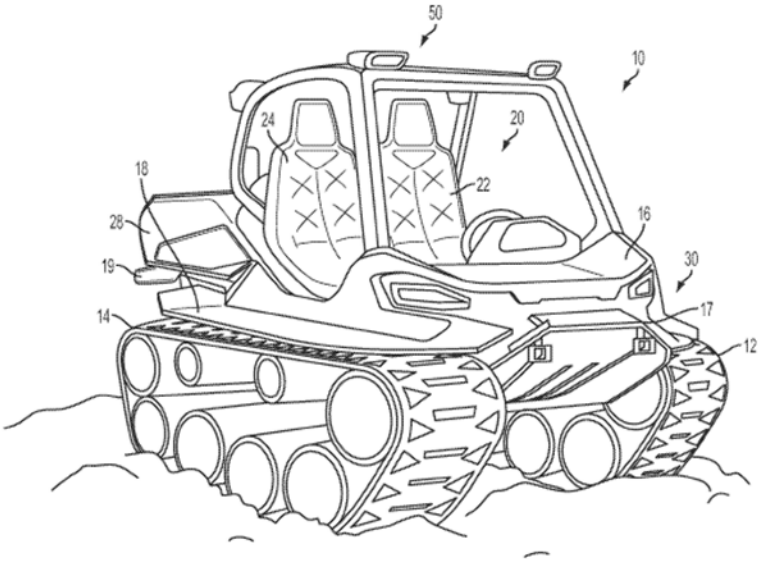

FIG. 1

EX1017, Bennett-II, p. 2.

99. Bennett-II describes that its vehicle 10 has a pair of tracks 12, 14 that are driven by two drive units 590, 592 through a transmission 550 that is powered by an engine 502:

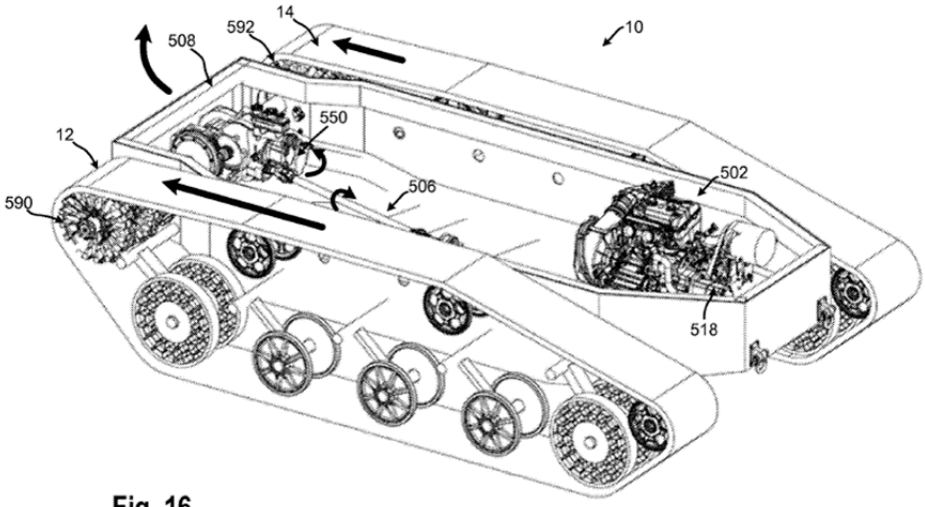

Fig. 16

EX1017, Bennett-II, p. 22, Paras. [0048], [0077].

100. Bennett-II only includes generalized statements that its "vehicle 10 may be operated by remote control" and in "one embodiment, vehicle 10 is adapted to be remotely controlled. For example, a remote control electronic device may be used to control vehicle 10 wirelessly without

an operator being positioned in the vehicle 10." EX1017, Bennett-II, Paras. [0043], [0121]. Other than these generalized statements, Bennett-II provides no details as to how its remote control is designed or implemented. Additionally, Bennett-II makes no reference to manure, farm lagoons, or animal husbandry (livestock farming).

H. Lyseng [EX1019]

101. Lyseng is an August 29, 2013 article describing the Patent Owner's own commercial embodiment of the patented vehicle, which is shown below:

102. Lyseng does not appear to be prior art to the '425 Patent because it is dated August 29, 2013 – which is ten days **after** the Patent Owner filed its provisional patent application on August 19, 2013.

XI. GROUND 1: CLAIMS 1-21 ARE NOT ANTICIPATED BY CARRIER

103. In the following sections I examine various claim elements of the '425 Patent and explain why at least Claim 1 is not anticipated by Carrier. Claims 2-21 depend from Claim 1 and are not anticipated by Carrier for at least the same reasons.

A. Carrier Fails to Disclose or Suggest a Fluid Pump For Pumping Liquid Manure

104. Carrier unequivocally teaches a general-purpose amphibious vehicle that can optionally be equipped with a water pump and water cannon for firefighting:

> **[0060]** Another important feature of the present invention is that the tank, hoses, and pump may be readily removed from the vehicle through the use of quick-release devices. Assuming the water and foam tanks are empty, four firefighters should easily be able to remove the fire-fighting equipment, which would enable the vehicle to be used during a search and rescue. A remote controlled crane can be mounted on the rear of chassis **102** can also be used to facilitate in the removal of any of the aforementioned package components. The back portion, or rear deck, of the vehicle is capable of carrying two injured persons while two emergency personnel ride in the vehicle's passenger area. Consequently, transforming the vehicle and enabling it to be used for a different purpose reduces the number of vehicles required and provides greater flexibility to the firefighters, military personnel or other emergency personnel who use the device.
>
> **[0061]** The use of a pump mounted to the all terrain vehicle which is capable of pumping water from a lake or stream onto a fire is another feature of the present invention. This feature reduces the need to transport water to the site of the fire or, in the alternative, makes it easier to transport water pumping equipment to the body of water to be used infighting the fire.

EX1005, Carrier, ¶ [0060]-[0061]. This optional pump in Carrier is described as "capable of pumping water from a lake or stream." Carrier does not say that the pump has other capabilities or that the pump is capable of pumping manure. Carrier makes zero reference to manure, farm lagoons, or animal husbandry (livestock farming). Similarly, Carrier provides no teaching or suggestion of using its vehicle in agricultural applications, much less the pumping of liquid manure.

105. A POSITA would understand that traditional water pumps, like the one disclosed in Carrier, would be prone to clogging in manure pumping applications. This is reflected by statements made by the inventors in the '425 Patent and inventors of other manure agitation equipment. For example, the '425 Patent specification explains that liquid manure includes solid

materials that can clog traditional pumps:

> telescoping connections to the single fluid conduit. Lowering the fluid pump for immersion into the fluid obviates the need for priming the fluid pump, which can be problematic when the fluid is manure comprising solid materials that can plug the pump or priming structure. Immersion of the pump also simplifies intermittent operation of the pump, due to eliminating potential loss of prime, and reduces the need for pump maintenance.

EX1001, '425 Patent, col. 3, ln. 14-21. Along the same lines, the Houle reference explains that farm animal manure consists of a liquid with solid particles in suspension that tend to clog traditional pumps:

> Farm animal manure consists of solid particles in a liquid, and the solid particles either settle on the bottom of the container (as in the case of pig manure) or form a crust over the liquid (as in the case of cow manure) depending on the density of the solid matter and, in some cases, both conditions obtain. Thus, the mass of manure in the container must be thoroughly mixed prior to pumping in order to maintain the solid particles in suspension, otherwise only the liquid matter will be pumped out while the solid matter accumulates in the container. Moreover, such solid matter tends to clog the pump.

> Hitherto, manure handling pumps consisted of a powerful centrifugal pump disposed near the bottom of the container, the impeller turning about a vertical axis, and a conduit system coupled to the outlet of the pump for either circulating manure within the container or away therefrom into a manure spreader or a different container. The conduit system therefore has a first branch leading out of the container toward another container or toward a tank spreader, and a second branch leading to a suitable nozzle pipe for returning into the container the slurry being mixed. A gate controls the selection of conduit branch in order to either agitate the slurry or pump same out of the reservoir. Examples of such centrifugal systems of which many different designs are currently available from farm equipment manufacturers, are described in U.S. Pat. Nos. 3,905,725 dated Sept. 16, 1975 (R. L. Johnson), 3,446,151, May 27, 1969 (H. G. V. Anderson), 3,456,592, July 22, 1969 (L. L. Nelsen) and 3,966,361, June 29, 1976 (B. L. House). Such devices however provide limited efficiency when the reservoir contains a thick floating crust or heavy bottom sediments. Indeed, the mixing capabilities of centrifugal pump systems are at best limited and time consuming, and no agitation takes place during transfer of the slurry to a different container into a tank spreader. Furthermore, clogging of the pump's impeller and consequential loss of pump efficiency remains a serious shortcoming.

EX2010, U.S. Pat. No. 4,406,413, col. 1, ln. 24-63.

106. A POSITA would also expect Carrier's water pump to have clogging problems if used to pump liquid manure because Carrier discloses a screen for filtering debris that would otherwise clog hoses or the pump:

> **[0063]** The tank **201** can preferably have a recessed top for storage of hoses, multiple 100-foot hoses, and a large fill orifice, a screen to filter debris that would otherwise clog hoses, pump **202** to refill the tank **201** from lakes, ponds, or streams. Additionally, the tank **201** includes a master drain for flushing and cleaning the tank. In addition, a water cannon may be provided with vehicle **100** and located adjacent the operator to enable use thereof.

EX1005, Carrier, ¶ [0063]. A POSITA would understand that this screen in Carrier for filtering debris would quickly become clogged by the suspended solids found within liquid manure, rendering the pump inoperable if used to pump liquid manure. This portion of Carrier's disclosure

would suggest to a POSITA that Carrier's pump was not designed to pump liquid manure and could not be used to pump liquid manure.

B. Carrier Fails to Disclose All of the Wireless Remote Control Limitations of Claim 1

107. Claim 1 requires "wireless remote control configured to enable an operator who is remote from the vehicle to … (2) control a flow of liquid manure from the fluid pump." Carrier does not disclose a pump that pumps liquid manure so it follows that Carrier also fails to teach wireless remote control of "a flow of liquid manure from the fluid pump."

C. Carrier Fails to Disclose a Submersible Pump Housing With a Bottom Fluid Inlet and At Least Two Tangential Fluid Outlets

108. I have also considered whether Carrier meets all of the limitations of Claim 1 if the language reciting "a fluid pump for pumping liquid manure" is construed as a means-plus-function claim limitation. Under that construction, it is my opinion that Carrier fails to disclose the structure described in the '425 Patent specification that performs the function of "pumping liquid manure."

109. As explained above, the structure described in the '425 Patent specification that performs the function of "pumping liquid manure" is: "a pump housing configured for immersion within the liquid manure, the pump housing has a bottom fluid inlet and at least two tangential fluid outlets, and an impeller that draws the liquid manure to be pumped through the bottom fluid inlet of the pump housing."

110. The pump disclosed in Carrier fails to satisfy any of this structure. Carrier's written description fails to provide any description of the pump's structure, other than describing the screen discussed above. To the extent anything structural can be understood from the drawings, it appears that Carrier's two pumps 202 do not have a submersible housing and include a side inlet and a single outlet on the top of the housing:

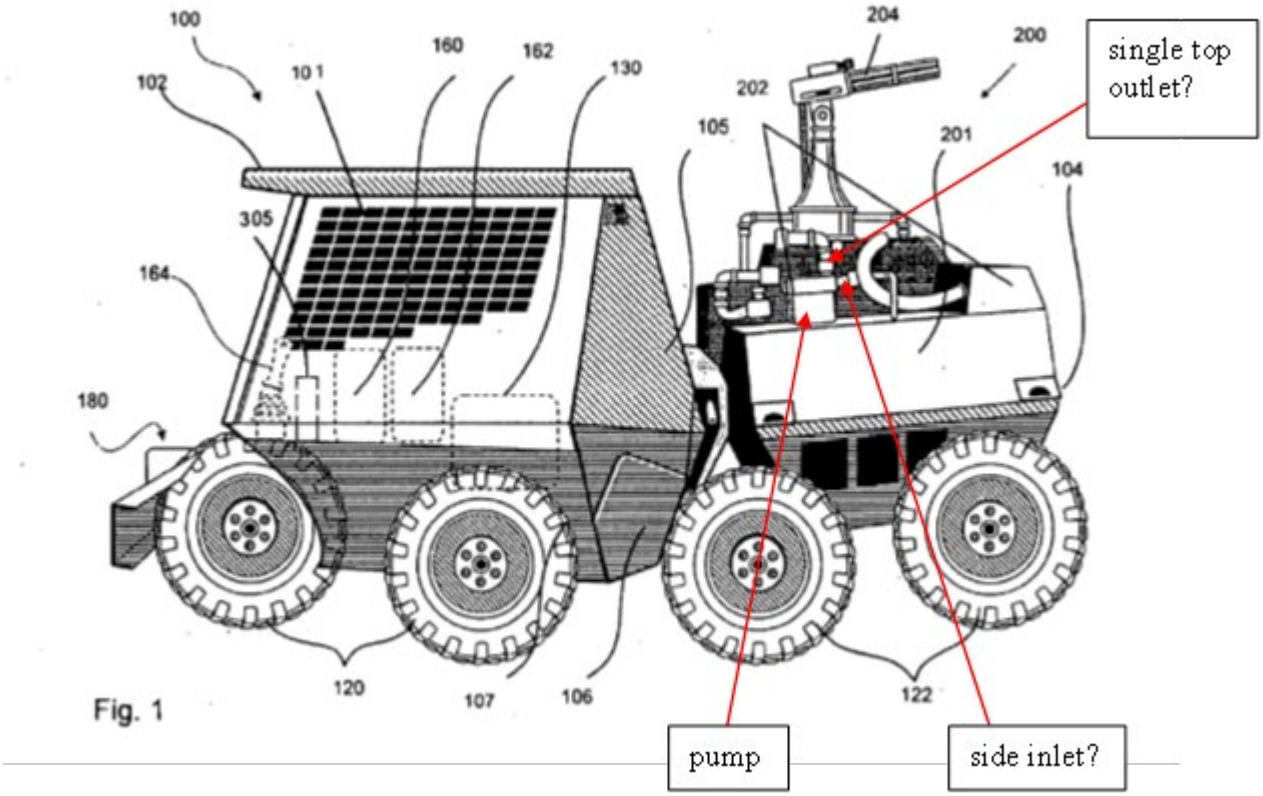

D. Carrier Fails to Disclose the Claimed Combination of Elements, Which When Considered Collectively, Define an Amphibious Manure Lagoon Agitation Vehicle

111. As explained above, when the claim elements are considered together as a claimed combination, what is claimed is an amphibious vehicle that is specially adapted for the particular purpose of disrupting the crust and recirculating liquid manure in a manure lagoon, where the vehicle can drive into, out of, and navigate the manure lagoon by wireless remote control. Carrier fails to disclose such a vehicle.

XII. GROUND 2: CLAIMS 1-7 AND 12-19 ARE NOT OBVIOUS BASED ON TRUXOR IN VIEW OF YOON OR CARRIER

112. In the following sections I examine various claim elements of the '425 Patent and explain why at least Claim 1 is not rendered obvious by Truxor in view of Yoon or Carrier ("the Truxor Combination"). Claims 2-7 and 12-19 depend from Claim 1 and are not rendered obvious by the Truxor Combination for at least the same reasons.

A. The Truxor Combination Fails to Disclose or Suggest a Fluid Pump For Pumping Liquid Manure

113. Truxor discloses an amphibious vehicle that is designed to carry an onboard operator and a number of different tool attachments, including aquatic weed cutters [EX1006, pp. 6-7], rakes [EX1006, pp. 8-9], buckets and log grabbers [EX1006, p. 9], dredge pumps [EX1006, pp. 10-11], excavators [EX1006, p. 12], cultivators [EX1006, p. 13], and oil decontamination tools [EX1006, pp. 14-15].

114. Truxor does not teach or even suggest that the Truxor vehicle and one of its pump attachments are used to pump manure.

115. Instead, Truxor's documentation clearly states that the Doro pump is designed for pumping light sediments and volatile sand:

The Doro Pump

Page 18

The Doro pump is designed for pumping light sediments and volatile sand. The Doro pump is supplied with a screw feed. The intake can be equipped with a suction nozzle when pumping sand or light floating sediments.

EX1007, Arnoldsson, p. 123.

116. A POSITA would not take this statement that "[t]he Doro pump is designed for pumping light sediments and volatile sand" to mean that the Doro pump would not be prone to clogging in manure pumping applications. Indeed, the Houle reference explains that even powerful centrifugal pumps are prone to clogging when used to pump manure and explains that "[s]uch devices … provide limited efficiency when the reservoir contains a thick floating crust or heavy bottom sediments":

Farm animal manure consists of solid particles in a liquid, and the solid particles either settle on the bottom of the container (as in the case of pig manure) or form a crust over the liquid (as in the case of cow manure) depending on the density of the solid matter and, in some cases, both conditions obtain. Thus, the mass of manure in the container must be thoroughly mixed prior to pumping in order to maintain the solid particles in suspension, otherwise only the liquid matter will be pumped out while the solid matter accumulates in the container. Moreover, such solid matter tends to clog the pump.

Hitherto, manure handling pumps consisted of a powerful centrifugal pump disposed near the bottom of the container, the impeller turning about a vertical axis, and a conduit system coupled to the outlet of the pump for either circulating manure within the container or away therefrom into a manure spreader or a different container. The conduit system therefore has a first branch leading out of the container toward another container or toward a tank spreader, and a second branch leading to a suitable nozzle pipe for returning into the container the slurry being mixed. A gate controls the selection of conduit branch in order to either agitate the slurry or pump same out of the reservoir. Examples of such centrifugal systems of which many different designs are currently available from farm equipment manufacturers, are described in U.S. Pat. Nos. 3,905,725 dated Sept. 16, 1975 (R. L. Johnson), 3,446,151, May 27, 1969 (H. G. V. Anderson), 3,456,592, July 22, 1969 (L. L. Nelsen) and 3,966,361, June 29, 1976 (B. L. House). Such devices however provide limited efficiency when the reservoir contains a thick floating crust or heavy bottom sediments. Indeed, the mixing capabilities of centrifugal pump systems are at best limited and time consuming, and no agitation takes place during transfer of the slurry to a different container into a tank spreader. Furthermore, clogging of the pump's impeller and consequential loss of pump efficiency remains a serious shortcoming.

EX2010, U.S. Pat. No. 4,406,413, col. 1, ln. 24-63.

117. In view of this background knowledge and the fact that the Truxor reference itself does not teach that the Doro pump is designed and used to pump manure, a POSITA would not consider the Doro pump to be a "fluid pump for pumping liquid manure" as required by the claims.

B. The Truxor Combination Fails to Disclose All of the Wireless Remote Control Limitations of Claim 1

118. Claim 1 requires "wireless remote control configured to enable an operator who is remote from the vehicle to … (2) control a flow of liquid manure from the fluid pump." As explained above, Truxor does not disclose a pump that pumps liquid manure so it follows that the Truxor Combination also fails to teach wireless remote control of "a flow of liquid manure from the fluid pump."

C. The Truxor Combination Fails to Disclose a Submersible Pump Housing With At Least Two Tangential Fluid Outlets

119. I have also considered whether the Truxor Combination meets all of the limitations of Claim 1 if the language reciting "a fluid pump for pumping liquid manure" is construed as a means-plus-function claim limitation. Under that construction, it is my opinion that the Truxor Combination fails to disclose the structure described in the '425 Patent specification that performs the function of "pumping liquid manure."

120. As explained above, the structure described in the '425 Patent specification that performs the function of "pumping liquid manure" is: "a pump housing configured for immersion within the liquid manure, the pump housing has a bottom fluid inlet and at least two tangential fluid outlets, and an impeller that draws the liquid manure to be pumped through the bottom fluid inlet of the pump housing."

121. The dredge pumps disclosed in Truxor have a single outlet and therefore do not have "at least two tangential fluid outlets" as required by this means-plus-function limitation:

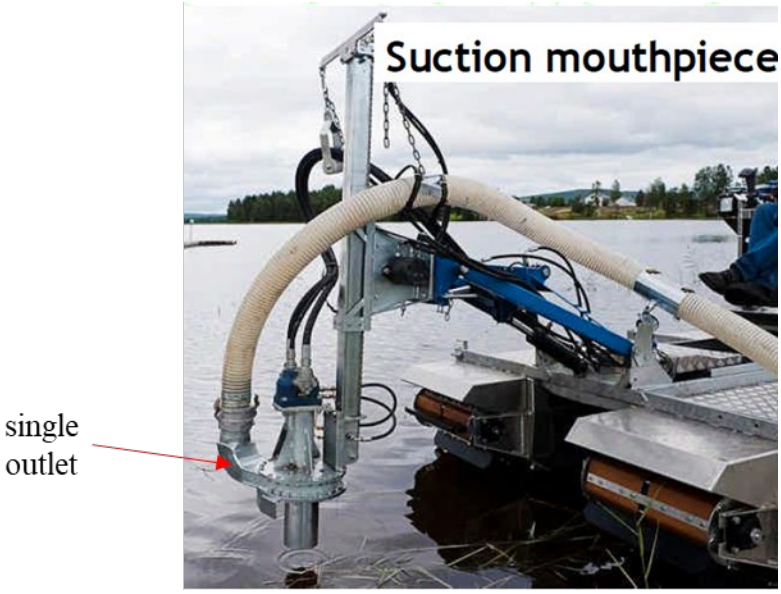

EX1006, Truxor, p. 10.

EX1006, Truxor, p. 11.

122. Carrier does not disclose a pump housing with at least two tangential fluid outlets, as explained above.

123. Yoon also fails to disclose a pump housing with at least two tangential fluid outlets. Like Carrier, Yoon appears to teach an onboard pump and the disclosure is insufficient to teach a POSITA about the actual structure of this generically described pump:

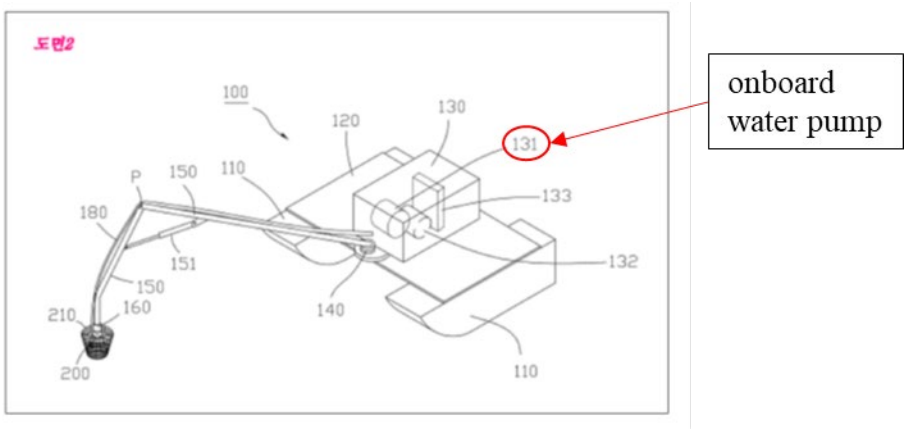

124. As a result, the Truxor Combination does not disclose or suggest a fluid pump with a pump housing with at least two tangential fluid outlets.

D. The Truxor Combination Fails to Disclose the Claimed Combination of Elements, Which When Considered Collectively, Define an Amphibious Manure Lagoon Agitation Vehicle

125. As explained above, when the claim elements are considered together as a claimed combination, what is claimed is an amphibious vehicle that is specially adapted for the particular purpose of disrupting the crust and recirculating liquid manure in a manure lagoon, where the vehicle can drive into, out of, and navigate the manure lagoon by wireless remote control.

126. The Truxor marketing brochure [EX1006] does not convey to a POSITA a vehicle that pumps manure. Instead, the Truxor marketing brochure [EX1006] describes a manned amphibious vehicle for "Reed cutting & Gathering – Excavation – Dredging":

EX1006, Truxor, p. 1.

127. If a POSITA were to even make a combination of Truxor with Yoon or Carrier,

the result would be an amphibious remote-controlled weed clearing and dredging vehicle – not an amphibious manure lagoon pumping/agitation vehicle.

E. A POSITA Would Not Have Had a Reasonable Expectation of Success in Combining Truxor With Yoon or Carrier

128. The amphibious vehicle disclosed in Truxor and its tool attachments are designed to be operated by an on-board operator. As a result, Truxor fails to teach the limitations of Claim 1 that recite "a wireless remote control configured to enable an operator who is remote from the vehicle to: (1) control the ground engaging propulsion structure; (2) control a flow of liquid manure from the fluid pump; (3) control at least one of the speed and direction of the vehicle when the vehicle is ground engaging; and, (4) control at least one of the speed and direction of the vehicle when the vehicle is floating."

129. With respect to Ground 2, Petitioner's expert asserts that a POSITA would **add** wireless remote-control functionality to the amphibious vehicle disclosed in Truxor in view of the remote-control teachings of Yoon or Carrier; however, in my opinion a POSITA would <u>not</u> have had a reasonable expectation of success in making this combination and achieving the claimed invention.

130. Truxor discloses two multi-function joysticks that are used to control the positioning and operation of the submersed pump:

The Doro Pump

The Doro pump is regulated with the help of crossbar switches. The left joystick adjusts the screw feed = socket 1. The rotation can be max. 40 %. The upward and downward movement of the telescope extension is controlled using socket 2 (accessory). The right joystick with socket 3 regulates the rotation speed of the pump, which can be 100 % in most cases.

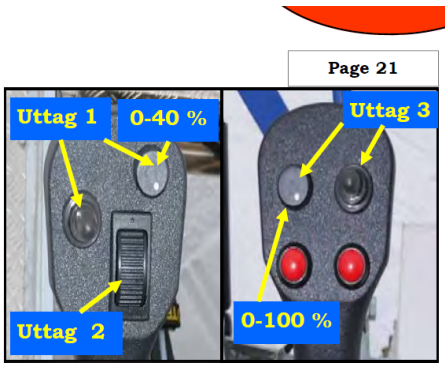

EX1007, Arnoldsson Decl., p. 126.

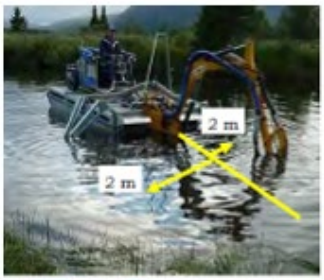

The digging arm may only be moved laterally when the outriggers touch the bottom. The lateral scope of the digging arm with a mounted Doro pump is 4 metres but for safety reasons only a 2-metre range can be used. This means that the permissible working width from the centre is 2 metres in each direction.

Warning! There is a tilting risk if the maximum range is used.

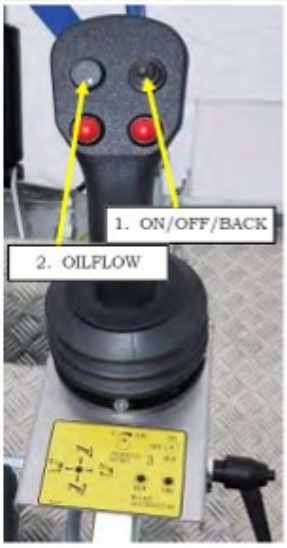

Hydraulic-driven tools mounted on Doro Digger require different oil flows.

Socket 3 that determines the oil flow/pressure to the tools is regulated using the right joystick. The switch (1) controls on/off/back.

The knob (2) adjusts the oil flow. Turn the control clockwise to end position for maximum oil flow (100%).

The rotation speed of the diesel motor also affects the maximum flow of the hydraulic pump. Higher rotation speed is required when many hydraulic functions are running at the same time.

Recommended oil flows for the different tools (2):

Doro Pump V3 80-100 %

Slaghack Orsi 80-100 %

Doro Cutter ESM 1900 40-60 %

Doro Mill 50-70 %

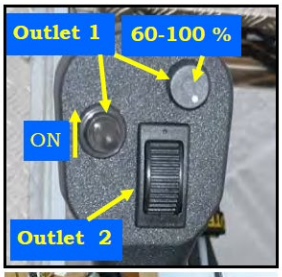

The controls on the left joystick regulates the oil flow to Doro Digger. The toggle switch activates the oil supply and the knob regulates the oil flow. Turning the control counter-clockwise reduces the oil flow so that the speed of the swing cylinders decreases (1). Recommended setting (60-100%)

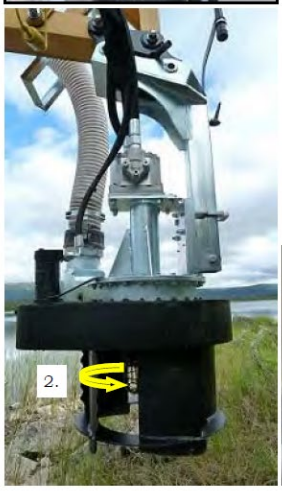

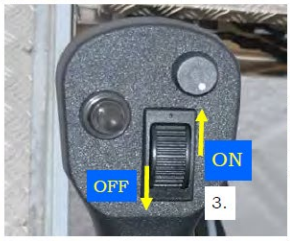

Socket 2 adjusts the feed to the pump intake (2). When socket 2 is used, the switch (4) on the panel must be in ON position to achive the hold function. When the roll switch (3) is moved upwards, the feed wheel will start (2). To stop the wheel, pull the roll switch downwards.

EX1007, Arnoldsson Decl., pp. 128-129.

131. The difficulties with converting hydraulic controls of this type to wireless remote control would be known to a POSITA. Teleoperation is a term often used when a machine or robot is operated from a distance (aka remote control). The difficulties of operating an excavator-like machine system in a teleoperation type environment lie from delay (latency) in controls, lack of tactile feedback (which is provided through onboard hydraulic controls), and an overload of visual information. EX2028, pp. 1, 4-6.The human machine interface (HMI) of hydraulic excavator controls has not evolved much in the last couple of decades and therefore does not lend itself to easily being converted to teleoperation. EX2025, p. 3. In the 2013-2014 time period, commentators explained that further studies and development was needed to convert these types of manual excavator-like controls to wireless remote-control. EX2025, p. 8. Further, ASME papers show this was still an area requiring further development and new control systems in 2022. EX2028, pp. 1-2, 4-6.

132. Petitioner's expert has not shown or even attempted to explain how remote control over the various functions of the Truxor vehicle and Doro Pump could be implemented, how a POSITA could overcome these difficulties when making the Truxor Combination, or that the resulting combination would actually work in the manure lagoon environment.

133. Even today, some ten years later, there is no evidence that a remote-control option has been added to the Truxor vehicle. On October 1, 2023, I visited the Truxor website at https://truxor.com. I was unable to find any reference to any features or options that indicated remote control of their vehicles is available as an option for their products.

134. On October 2, 2023, I took screenshots from the Truxor website and compiled them as EX2026. I therefore certify that the screenshots shown in EX2026 are true and correct images of the Truxor website identified in the paragraph above. The fact that Truxor has not, to this day, added a remote control option to its vehicles provides evidence that this would not be a simple feat that could be accomplished by routine experimentation.

135. A POSITA would also expect that remotely controlling the positioning and operation of a submerged pump to be problematic given the difficulty observing its operation from a remote location.

136. Truxor's elevated seating position demonstrates the importance of visual observation of the pump located at the end of Truxor's boom arm:

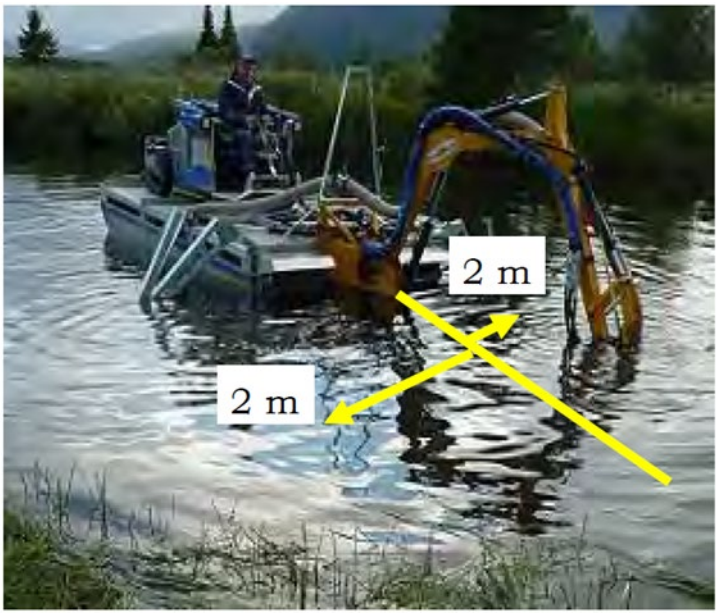

EX1007, Arnoldsson Decl., pp. 60, 128.

137. The vehicle disclosed in SenwaTec is similar to the vehicle disclosed in Truxor, but has a seating position that is below the top deck of the vehicle. As a result, operators of the SenwaTec vehicle were forced to stand to get a better view of the submersed pump:

EX1012, SenwaTec, p. 2. This reinforces what a POSITA would readily appreciate – it would be difficult if not impossible to control and operate this type of vehicle and pump from a remote location.

138. Truxor's operator's manual also warns of known "a tilting risk." EX1007, Arnoldsson Decl., p. 128. Petitioner's expert even acknowledges that the vehicle disclosed in Truxor has a tilting (i.e., rollover) risk:

Potential Rollover Risk EX1006, 5; *see also* EX1021-EX1022, 1; EX1023, 8.	**Cold Weather/Hypothermia** EX1006, 6.

EX1004, Winkel Decl., p. 142.

139. This tilting risk would dissuade a POSITA from adding remote control functionality to Truxor because remote control is less precise, has greater delay (latency), and it is much more difficult for the operator to perceive and counter tipping (i.e., remote control operators lack tactile feedback through the controls and or an on-board perception of sliding and tipping). While the operator might not get hurt if a remote control vehicle tips, tipping creates a considerable set back as the remote control vehicle can become damaged by tipping and manned heavy equipment would likely be necessary to extract the vehicle from the manure lagoon and/or right the vehicle. Petitioner's expert completely overlooks Truxor's known instability problem from a reasonable expectation of success standpoint.

140. Manure lagoons typically have steep embankments that can be covered in manure, mud, sand, and/or ice and are therefore extremely slippery. EX1004, Winkel Decl., ¶¶334, 336. A POSITA would recognize that Truxor's known instability issues would be exacerbated by remote control. As a result, a POSITA would not have had a reasonable expectation that adding remote control functionality to Truxor would be successful in producing an amphibious remote-

controlled vehicle that could operate in a manure lagoon environment without tipping.

141. The reliance on Melnikov by Petitioner's expert is also misplaced. Melnikov actually supports my opinion that a POSITA would not have had a reasonable expectation of success in adding wireless remote-control functionality to Truxor because that is not what Melnikov did.

142. Melnikov discusses Truxor in its "Background" section as prior art and notes the drawback that it requires an onboard operator:

> Truxor — a multifunctional amphibian machine manufactured by the Swedish company *Dorotea Mekaniska AB* is known (www.doroteamekaniska.se). The amphibian is a pontoon machine on caterpillar tracks operated by one operator. On the machine, an oil skimmer, cultivator, excavator, rakes may be quickly mounted as hydraulic attachments. The machine is easily placed on a trailer, which makes it mobile and reduces transport costs. However, the disadvantages of the machine may include the presence of an operator located on the machine itself, which limits the use thereof in conditions dangerous for humans.

EX1025, Melnikov Trans., p. 4. Significantly, Melnikov does not suggest adding remote control to Truxor. Instead of doing that, Melnikov designed a radically different remote-controlled vehicle with a dual-screw propulsion system that looks nothing like Truxor:

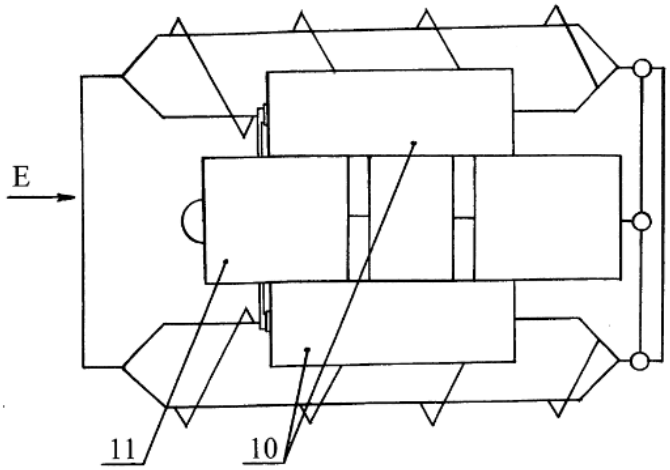

Фиг. 11

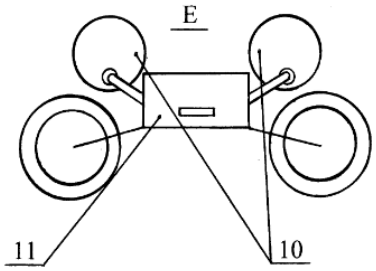

Фиг. 12

EX1024, Melnikov, p 7.

143. These major differences continue with Melnikov's pump, which is illustrated as an **onboard** pump for pumping liquid biopreparations and mineral fertilizers from the containers 10 to the spray system 11:

> The machine for applying liquid biopreparations and liquid mineral fertilizers includes containers 10 and a pump with a spray system 11 (Fig. 11) mounted on the carrier vehicle.

EX1025, Melnikov Trans., p. 5.

144. The device in Melnikov does not pose the same problem as the Truxor Combination, where controlling the positioning and operation of a submerged pump would be problematic given the complexity of the controls and difficulty observing its operation from a remote location.

145. Melnikov clearly knew of the Truxor vehicle and clearly knew that its requirement for an onboard operator was a drawback. If it were both obvious and reasonably feasible to add remote control functionality to Truxor, that is precisely what Melnikov would have done. But Melnikov didn't do that and instead created a device that would be far simpler to operate as a remote-control vehicle.

146. A POSITA would understand that just because *some* vehicles can be remote controlled does not mean that *all* vehicles can be remote controlled. Thus, in my opinion, a POSITA would not have had a reasonable expectation of successfully adding remote-control functionality to Truxor to produce an amphibious remote-controlled vehicle that could operate in a manure lagoon environment without tipping.

XIII. GROUND 3: CLAIMS 1-7 AND 12-19 ARE NOT OBVIOUS BASED ON SENWATEC IN VIEW OF YOON OR CARRIER

147. In the following sections I examine various claim elements of the '425 Patent and explain why at least Claim 1 is not rendered obvious by SenwaTec in view of Yoon or Carrier ("the SenwaTec Combination"). Claims 2-7 and 12-19 depend from Claim 1 and are not rendered obvious by the SenwaTec Combination for at least the same reasons.

A. The SenwaTec Combination Fails to Disclose or Suggest a Fluid Pump For Pumping Liquid Manure

148. Like Truxor, SenwaTec also discloses an amphibious vehicle that is designed to carry an onboard operator and a number of different tool attachments. In particular, SenwaTec's marketing brochure [EX1012] advertises a number of different attachments that can be installed on the end of its vehicle's excavator arm (boom arm), including weed cutter-bars, rakes, mowing buckets, excavating buckets, tree cutters, and dredge pumps:

EX1012, SenwaTec, pp. 2-3.

149. SenwaTec does not teach or even suggest that the SenwaTec vehicle and one of its pump attachments are used to pump manure.

150. Nor would a POSITA consider the centrifugal pumps disclosed in SenwaTec to be suitable for manure pumping applications. Indeed, the Houle reference explains that even powerful centrifugal pumps are prone to clogging when used to pump manure and explains that "[s]uch devices however provide limited efficiency when the reservoir contains a thick floating crust or heavy bottom sediments":

> Farm animal manure consists of solid particles in a liquid, and the solid particles either settle on the bottom of the container (as in the case of pig manure) or form a crust over the liquid (as in the case of cow manure) depending on the density of the solid matter and, in some cases, both conditions obtain. Thus, the mass of manure in the container must be thoroughly mixed prior to pumping in order to maintain the solid particles in suspension, otherwise only the liquid matter will be pumped out while the solid matter accumulates in the container. Moreover, such solid matter tends to clog the pump.

Hitherto, manure handling pumps consisted of a powerful centrifugal pump disposed near the bottom of the container, the impeller turning about a vertical axis, and a conduit system coupled to the outlet of the pump for either circulating manure within the container or away therefrom into a manure spreader or a different container. The conduit system therefore has a first branch leading out of the container toward another container or toward a tank spreader, and a second branch leading to a suitable nozzle pipe for returning into the container the slurry being mixed. A gate controls the selection of conduit branch in order to either agitate the slurry or pump same out of the reservoir. Examples of such centrifugal systems of which many different designs are currently available from farm equipment manufacturers, are described in U.S. Pat. Nos. 3,905,725 dated Sept. 16, 1975 (R. L. Johnson), 3,446,151, May 27, 1969 (H. G. V. Anderson), 3,456,592, July 22, 1969 (L. L. Nelsen) and 3,966,361, June 29, 1976 (B. L. House). Such devices however provide limited efficiency when the reservoir contains a thick floating crust or heavy bottom sediments. Indeed, the mixing capabilities of centrifugal pump systems are at best limited and time consuming, and no agitation takes place during transfer of the slurry to a different container into a tank spreader. Furthermore, clogging of the pump's impeller and consequential loss of pump efficiency remains a serious shortcoming.

EX2010, U.S. Pat. No. 4,406,413, col. 1, ln. 24-63.

151. In view of this background knowledge and the fact that the SenwaTec reference itself does not teach that its centrifugal pumps are designed and used to pump manure, a POSITA would not consider these pumps to be "a fluid pump for pumping liquid manure" as required by the claims.

B. The SenwaTec Combination Fails to Disclose All of the Wireless Remote Control Limitations of Claim 1

152. Claim 1 requires "wireless remote control configured to enable an operator who is remote from the vehicle to … (2) control a flow of liquid manure from the fluid pump." As explained above, SenwaTec does not disclose a pump that pumps liquid manure so it follows that the SenwaTec Combination also fails to teach wireless remote control of "a flow of liquid manure from the fluid pump."

C. The SenwaTec Combination Fails to Disclose a Submersible Pump Housing With At Least Two Tangential Fluid Outlets

153. I have also considered whether the SenwaTec Combination meets all of the limitations of Claim 1 if the language reciting "a fluid pump for pumping liquid manure" is construed as a means-plus-function claim limitation. Under that construction, it is my opinion that the SenwaTec Combination fails to disclose the structure described in the '425 Patent specification that performs the function of "pumping liquid manure."

154. As explained above, the structure described in the '425 Patent specification that performs the function of "pumping liquid manure" is: "a pump housing configured for immersion within the liquid manure, the pump housing has a bottom fluid inlet and at least two tangential fluid outlets, and an impeller that draws the liquid manure to be pumped through the bottom fluid inlet of the pump housing."

155. The dredge pumps disclosed in SenwaTec have a single outlet and therefore do not have "at least two tangential fluid outlets" as required by this means-plus-function limitation:

EX1012, SenwaTec, p. 2.

156. Carrier does not disclose a pump housing with at least two tangential fluid outlets, as explained above.

157. Yoon also fails to disclose a pump housing with at least two tangential fluid outlets. Like Carrier, Yoon appears to teach an onboard pump and the disclosure is insufficient to teach a POSITA about the actual structure of this generically described pump:

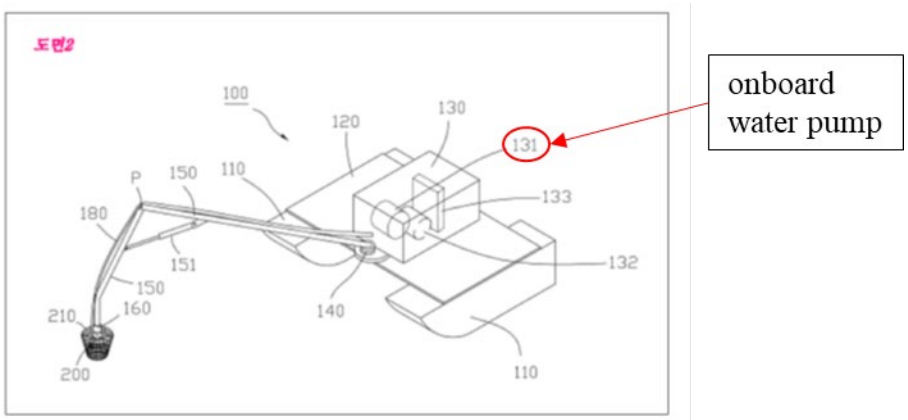

158. As a result, the SenwaTec Combination does not disclose or suggest a fluid pump with a pump housing with at least two tangential fluid outlets.

D. The SenwaTec Combination Fails to Disclose the Claimed Combination of Elements, Which When Considered Collectively, Define an Amphibious Manure Lagoon Agitation Vehicle

159. As explained above, when the claim elements are considered together as a claimed combination, what is claimed is an amphibious vehicle that is specially adapted for the particular purpose of disrupting the crust and recirculating liquid manure in a manure lagoon, where the vehicle can drive into, out of, and navigate the manure lagoon by wireless remote control.

160. SenwaTec's marketing brochure [EX1012] prominently advertises at the top of the first page its expertise in the following areas "Ditch Cleaner And Slope Mowers," "Moving and Clearing Boats," "Weed Harvesters," "Amphibious Vehicles," and "Cutter Suction And Excavating Dredges":

SENWATEC

40 YEARS OF EXPERIENCE IN THE DEVELOPMENT OF:
- DITCH CLEANER AND SLOPE MOWERS
- MOWING AND CLEARING BOATS
- WEED HARVESTERS
- AMPHIBIOUS VEHICLES
- CUTTER SUCTION AND EXCAVATING DREDGES

SCHRÖER ENVIRONMENT AND WATER TECHNOLOGY
Light Amphibious Boat/Vehicle
"Amphi-King®" SWT-AB380

- Light and strong aluminum construction, approximately 2480 kg (5,500 lbs.), without attachments
- 6-wheel drive or track drive system (track drives are patented system)
- Forward crane ready for many attachments with available power for up to 50 KW (67 HP)
- Heavy duty Diesel engine certified to the latest standards of Tier IV emission and fuel consumption
- Optimal configuration of power requirements and hydraulic unit (less operating costs)
- Low ground pressure and good clearance on terrain, marches and swamps during on-land drives
- Shallow vessel draft with, low center of gravity for safe on-water maneuvering
- High working range and wide swing radius of the hydraulic crane arm, ready for many attachments
- Operating controls conveniently placed and adjustable to suite operator's seat position
- Vehicle construction & safety configuration according to European & International standards

A compact muscular vehicle with tracks

6-Wheel driven unit with stabilizer pontoons

With a powerful centrifugal pump and 8" suction- and 6" discharge ports, hydraulically driven, delivering 40 kW of pumping power

- Ergonomic arrangement of the operating and monitoring elements

-A compact transport package on the tilt deck trailer

EX1012, SenwaTec, p. 1.

161. If a POSITA were to even make a combination of SenwaTec with Yoon or Carrier,

the result would be an amphibious remote-controlled weed clearing and dredging vehicle – not an amphibious manure lagoon agitation/pumping vehicle.

E. A POSITA Would Not Have Had a Reasonable Expectation of Success in Combining SenwaTec With Yoon or Carrier

162. The amphibious vehicle disclosed in SenwaTec and its tool attachments are designed to be operated by an on-board operator. As a result, SenwaTec fails to teach the limitations of Claim 1 that recite "a wireless remote control configured to enable an operator who is remote from the vehicle to: (1) control the ground engaging propulsion structure; (2) control a flow of liquid manure from the fluid pump; (3) control at least one of the speed and direction of the vehicle when the vehicle is ground engaging; and, (4) control at least one of the speed and direction of the vehicle when the vehicle is floating."

163. With respect to Ground 3, Petitioner's expert asserts that a POSITA would **add** wireless remote-control functionality to the amphibious vehicle disclosed in SenwaTec in view of the remote-control teachings of Yoon or Carrier; however, in my opinion a POSITA would <u>not</u> have had a reasonable expectation of success in making this combination and achieving the claimed invention.

164. Petitioner's expert has not shown or even attempted to explain whether SenwaTec's manual controls lend themselves to remote control, how remote control over the various functions could be implemented, or that the resulting combination would actually work in the manure lagoon environment.

165. In my opinion, SenwaTec's manual controls depend on an onboard operator and close proximity observation of the submersed pump. As shown in the photograph below, the vehicle disclosed in SenwaTec has at least 8 different control interfaces – 5 separate joysticks, 2 foot pedals, and 1 hand-lever:

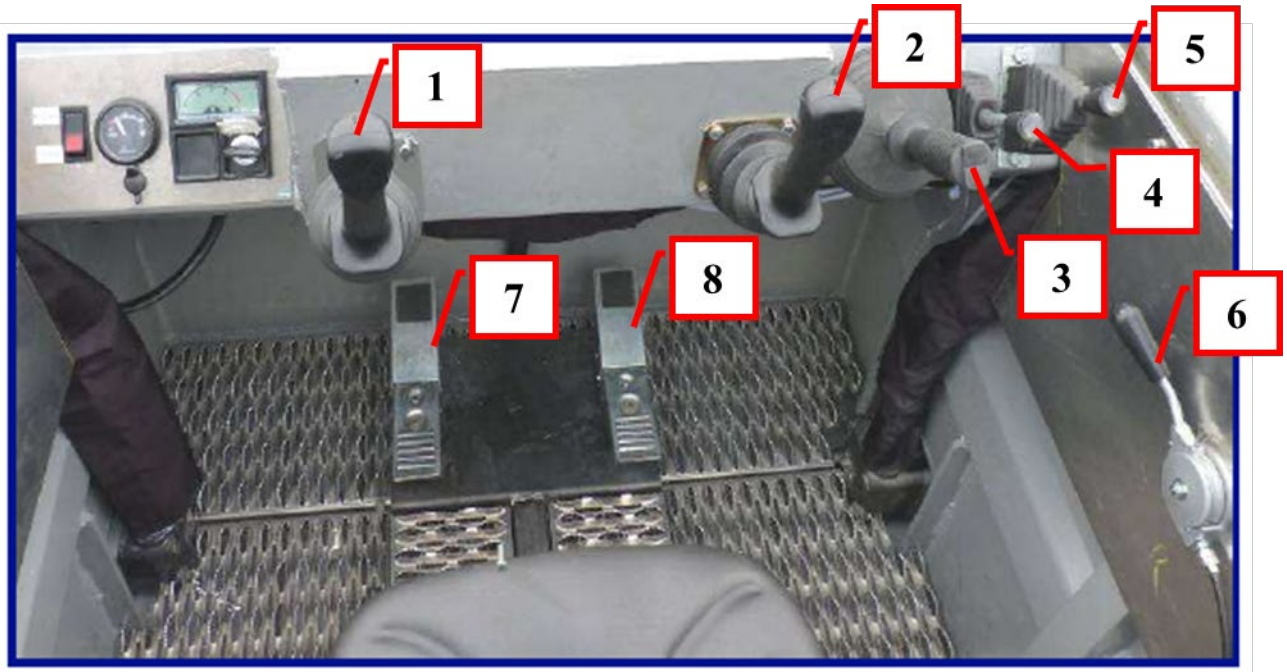

EX1012, SenwaTec, p. 1.

166. The difficulties with converting hydraulic controls of this type to wireless remote control would be known to a POSITA. Teleoperation is a term often used when a machine or robot is operated from a distance (aka remote control). The difficulties of operating an excavator-like machine system in a teleoperation type environment lie from delay (latency) in controls, lack of tactile feedback (which is provided through onboard hydraulic controls), and an overload of visual information. EX2028, pp. 1, 4-6. The human machine interface (HMI) of hydraulic excavator controls has not evolved much in the last couple of decades and therefore does not lend itself to easily being converted to teleoperation. EX2025, p. 3. In the 2013-2014 time period, commentators explained that further studies and development was needed to convert these types of manual excavator-like controls to wireless remote-control. EX2025, p. 8. Further, ASME papers show this was still an area requiring further development and new control systems in 2022. EX2028, pp. 1-2, 4-6.

167. Petitioner's expert has not shown or even attempted to explain how remote control over the various functions could be implemented, how a POSITA could overcome these difficulties

when making the SenwaTec combination, or that the resulting combination would actually work in the manure lagoon environment.

168. Even today, some ten years later, there is no evidence that a remote-control option has been added to the SenwaTec vehicle. On October 4, 2023, I visited the Berky website at https://www.berky.de/en. I understand from the Declaration of Ansgar Lonnemann [EX1013] that Berky purchased SenwaTec. In particular, the Berky Nereus 240 AMPHI appears to correspond to the SenwaTec amphibious vehicle depicted in EX1012. I was unable to find any reference to any features or options that indicated remote control of Berky's vehicles is available as an option for their products.

169. On October 4, 2023, I took screenshots from the Berky website and compiled them as EX2027. I therefore certify that the screenshots shown in EX2027 are true and correct images of the Berky website identified in the paragraph above. The fact that SenwaTec/Berky has not, to this day, added a remote control option to its vehicles provides evidence that this would not be a simple feat that could be accomplished by routine experimentation.

170. For these reasons, it is my opinion that a POSITA would not expect SenwaTec's controls to easily lend themselves to remote control.

171. It is also my opinion, that a POSITA would not reasonably expect success in operating the SenwaTec vehicle from a remote location where the positioning and operation of the submerged pump would be difficult to observe.

172. Photographs in SenwaTec's marketing brochure [EX1012] suggest to a POSITA that remote control of SenwaTec's pumping functionality from a distance would be a major problem given that the operators in the photographs are <u>STANDING UP</u> to get a better view of the submerged pump even though the operator's seat can't be more than 10 feet from the pump in these photographs:

EX1012, SenwaTec, p. 2. This reinforces what a POSITA would readily appreciate – it would be difficult if not impossible to control and operate this type of vehicle and pump from a remote location.

173. Petitioner's expert also fails to address another problem that a POSITA would expect if they attempted to add remote control functionality to SenwaTec – remote control increases the likelihood of a rollover.

174. One of the video screenshots in Exhibit B to the Lonnemann Declaration illustrates that SenwaTec's vehicle has a rollover risk, much like the Truxor vehicle:

EX1013, Lonnemann Decl., p. 14.

175. Manure lagoons typically have steep embankments that can be covered in manure, mud, sand, and/or ice and are therefore extremely slippery. EX1004, Winkel Decl., ¶¶334, 336. In my opinion, a POSITA would expect the instability issues with the SenwaTec vehicle to be exacerbated if remote control were added because remote control is less precise, has greater delay (latency), and it is much more difficult for the operator to perceive and counter tipping (i.e., remote control operators lack tactile feedback through the controls and or an on-board perception of sliding and tipping). While the operator might not get hurt if a remote control vehicle tips, tipping creates a considerable set back as the remote control vehicle can become damaged by tipping and manned heavy equipment would likely be necessary to extract the vehicle from the manure lagoon

and/or right the vehicle. This tilting risk would dissuade a POSITA from adding remote control functionality to SenwaTec.

176. As a result, a POSITA would not have had a reasonable expectation that adding remote control functionality to SenwaTec would be successful in achieving the claimed invention - an amphibious remote-controlled manure agitation vehicle that has to traverse steep and slippery embankments while entering and exiting manure lagoons.

XIV. GROUND 4: CLAIMS 1-21 ARE NOT OBVIOUS BASED ON PUCK IN VIEW OF BRYHAM

177. In the following sections I examine various claim elements of the '425 Patent and explain why at least Claim 1 is not rendered obvious by Puck in view of Bryham ("the Puck-Bryham Combination"). Claims 2-21 depend from Claim 1 and are not rendered obvious by the Puck-Bryham Combination for at least the same reasons.

A. The Puck-Bryham Combination Fails to Disclose or Suggest a "Power Source Configured to Provide Power to Both the Ground Engaging Propulsion Structure and the Fluid Pump"

178. Neither Puck nor Bryham disclose "a power source that provides power to <u>both</u> a manure pump and a ground engaging propulsion structure" as required by the language of Claim 1.

179. Petitioner's expert argues that a POSITA would be motivated to use Puck's power source to also power the wheels being added by Bryham:

> 348. A POSA would have been motivated to use the same internal combustion engine of Puck to power the land-based propulsion system of Bryham because it would be less expensive, more efficient, take up less space, and weigh less than providing two separate engines, one for the fluid pump and one for the hydraulic pump for land-propulsion. Further, the diesel engine of Puck would be more than sufficient to power the land-based propulsion, which Puck teaches could be as high as 2000 HP. EX1014, ¶[0024].

EX1004, Winkel Decl., p. 194; *see also* Petition, p. 77. But Petitioner's expert does not actually show or explain why the claimed arrangement "would be less expensive, more efficient, take up less space, and weigh less."

180. In my opinion, a POSITA would not find the claimed arrangement, where the power source powers both a manure pump and a hydraulic pump that powers the hydraulic motors of the ground engaging propulsion structure to be obviously "less expensive, more efficient, take up less space, and weigh less" than the other potential options disclosed in Bryham. For example, one of the preferred embodiments disclosed in Bryham utilizes separate electric motors to power Bryham's wheels. EX1015, Bryham, col. 16, ln. 13-27. Petitioner's expert appears to be relying on hindsight bias rather than the teachings in the prior art references themselves to conclude that the claimed arrangement is obviously the best.

B. The Puck-Bryham Combination Fails to Disclose "Wireless Remote Control Configured to … (1) Control the Ground Engaging Propulsion Structure"

181. Puck's remote-control system is limited to turning the engine on and off, controlling engine speed, turning the nozzles on and off, and controlling nozzle direction. *See* EX1014, Puck, ¶¶ [0032]-[0033]. Puck also lacks any sort of ground engaging propulsion structure. As a result, Puck's remote-control system does not provide "wireless remote control configured to enable an operator who is remote from the vehicle to … (1) control the ground engaging propulsion

structure" as required by the language of Claim 1.

182. Petitioner's expert argues that a POSITA would have been motivated to configure the remote-control steering system of Puck (used while the boat of Puck is floating) to control the speed and direction of Bryham's wheels while the vehicle is ground engaging. EX1004, Winkel Decl., ¶¶349-350. But this argument fails to address whether a POSITA would have a reasonable expectation that Puck's remote-control system could be successfully modified and used for control over Bryham's steering and propulsion system (i.e., Bryham's wheels). Again, POSITA would understand that just because *some* vehicles can be remote controlled does not mean that *all* vehicles can be remote controlled.

C. The Puck-Bryham Combination Fails to Disclose a Submersible Pump Housing With At Least Two Tangential Fluid Outlets

183. I have also considered whether the Puck-Bryham Combination meets all of the limitations of Claim 1 if the language reciting "a fluid pump for pumping liquid manure" is construed as a means-plus-function claim limitation. Under that construction, it is my opinion that the Puck-Bryham Combination fails to disclose the structure described in the '425 Patent specification that performs the function of "pumping liquid manure."

184. As explained above, the structure described in the '425 Patent specification that performs the function of "pumping liquid manure" is: "a pump housing configured for immersion within the liquid manure, the pump housing has a bottom fluid inlet and at least two tangential fluid outlets, and an impeller that draws the liquid manure to be pumped through the bottom fluid inlet of the pump housing."

185. Puck describes its slurry pump 38 as a Cornell Redi-Prime centrifugal pump with a single inlet and a single outlet. As shown below, this pump 38 does not have "a pump housing configured for immersion within the liquid manure" or "at least two tangential fluid outlets" as required by the structure recited in the '425 Patent specification for the "fluid pump" means-plus-function limitation:

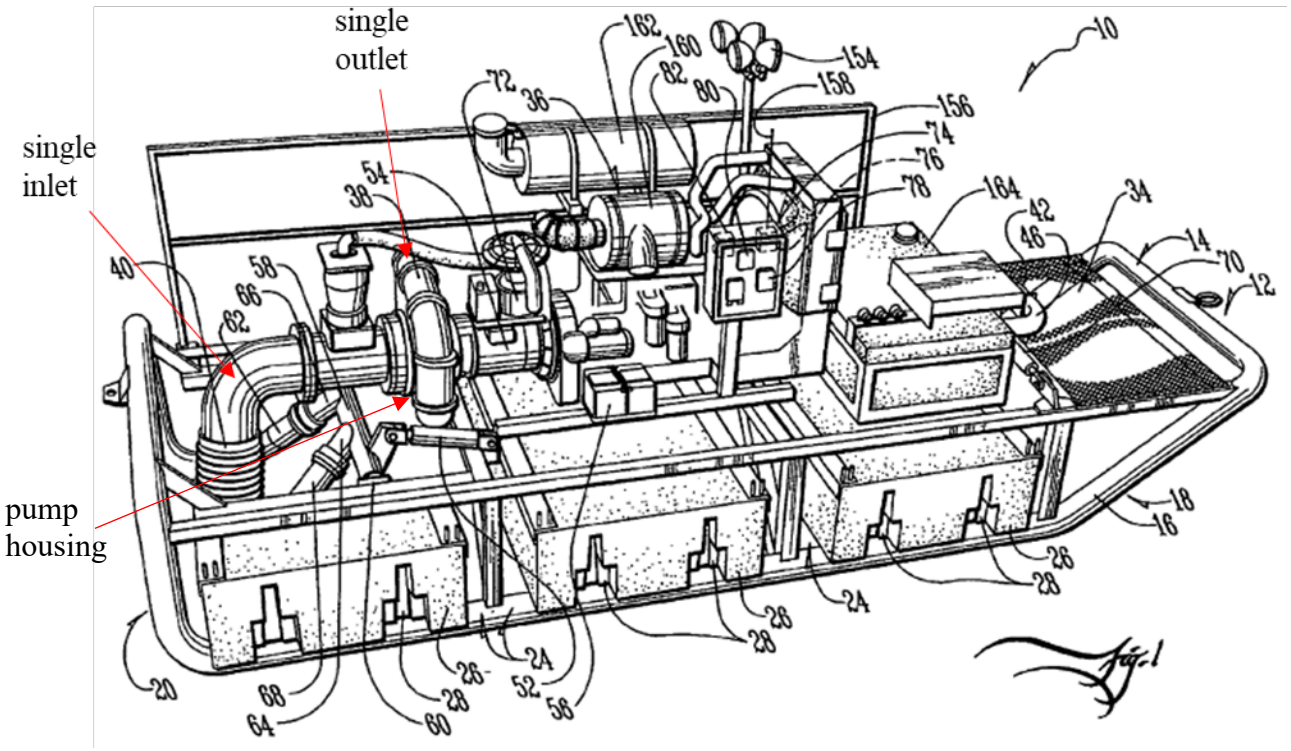

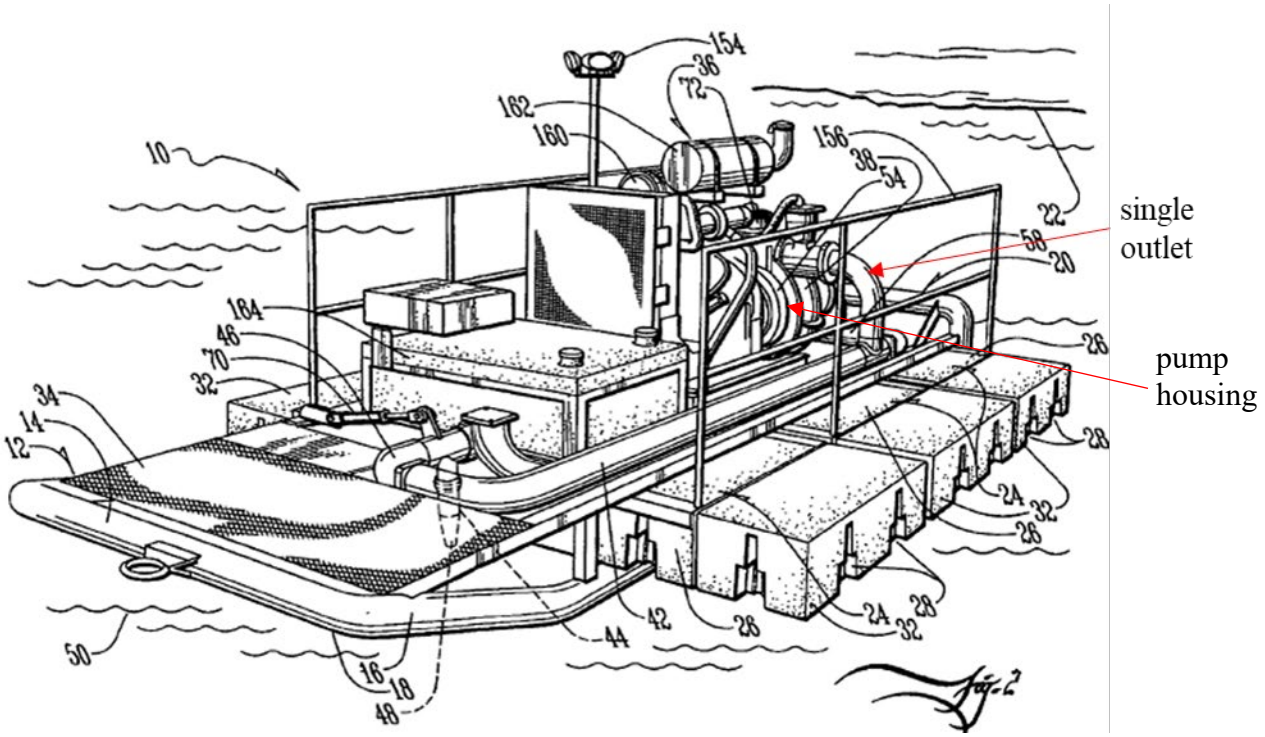

EX1014, Puck, pp. 2-3.

186. The pump housing of Puck's slurry pump 38 is also not "configured for immersion

within the liquid manure." As shown in Figures 2 and 4 of Puck, the pump housing of the slurry pump 38 is above the manure lagoon 22 and above the crust 126. Nor does the pump housing of Puck's slurry pump 38 have a "bottom fluid inlet." Rather, Puck shows its slurry pump 38 with a side fluid inlet that is connected to a "downwardly directed intake pipe (40)." EX 1014 Puck, ¶ [0026], Figures 1, 4, 6, and 8.

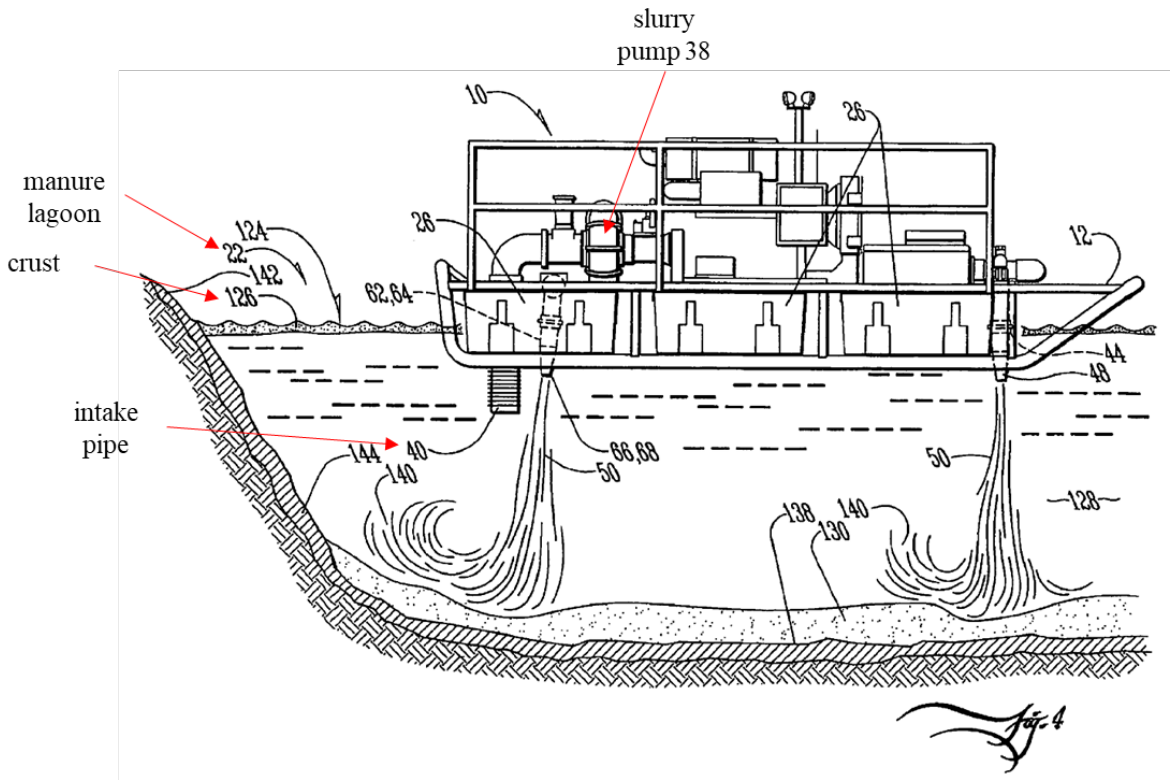

EX1014, Puck, pp. 5.

187. Bryham does not cure these deficiencies as it does not disclose a pump for pumping liquid manure.

188. As a result, the Puck-Bryham Combination does not disclose or suggest a fluid pump with a pump housing with at least two tangential fluid outlets.

D. A POSITA Would Not Have Possessed a Motivation to Combine Puck and Bryham

189. Petitioner's expert incorrectly asserts that a POSITA would have been motivated to

combine the teachings of Puck with the teachings of Bryham "to make the process of launching and retrieving the Puck boat from the manure lagoon safer and easier without having to place a trailer or one's feet into the hazardous and corrosive manure lagoon." EX1004, Winkel Decl., ¶331. Neither of these reasons/flaws in Puck's design are actually supported by Puck's disclosure.

190. As shown in the annotated image below from Paragraph 332 of the Winkel Declaration, Puck actually discloses a system where the manure agitation boat can be launched and retrieved **without** backing the trailer into the manure lagoon:

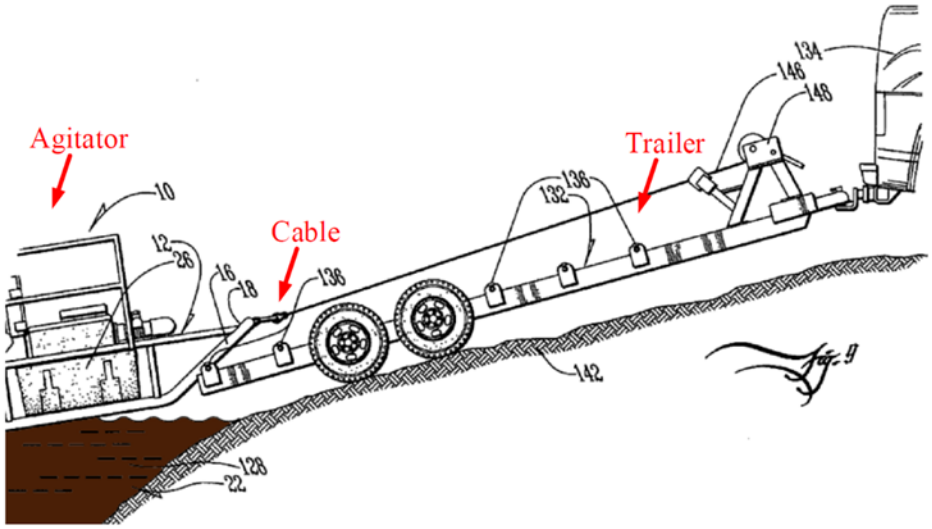

(*Id.*, FIG. 9 (annotated).)

EX1004, Winkel Decl., ¶332.

191. A POSITA would recognize that the process of launching and retrieving Puck's boat does not require placing "a trailer or one's feet into the hazardous and corrosive manure lagoon" as Petitioner's expert incorrectly argues. Indeed, nothing of the sort is shown or described in Puck's disclosure.

192. My opinion in this regard is further informed by the manure boat demonstration video published by Progressive Dairyman (EX2008), where neither the trailer or the operator is shown entering the lagoon when Puck's boat is launched in the video:

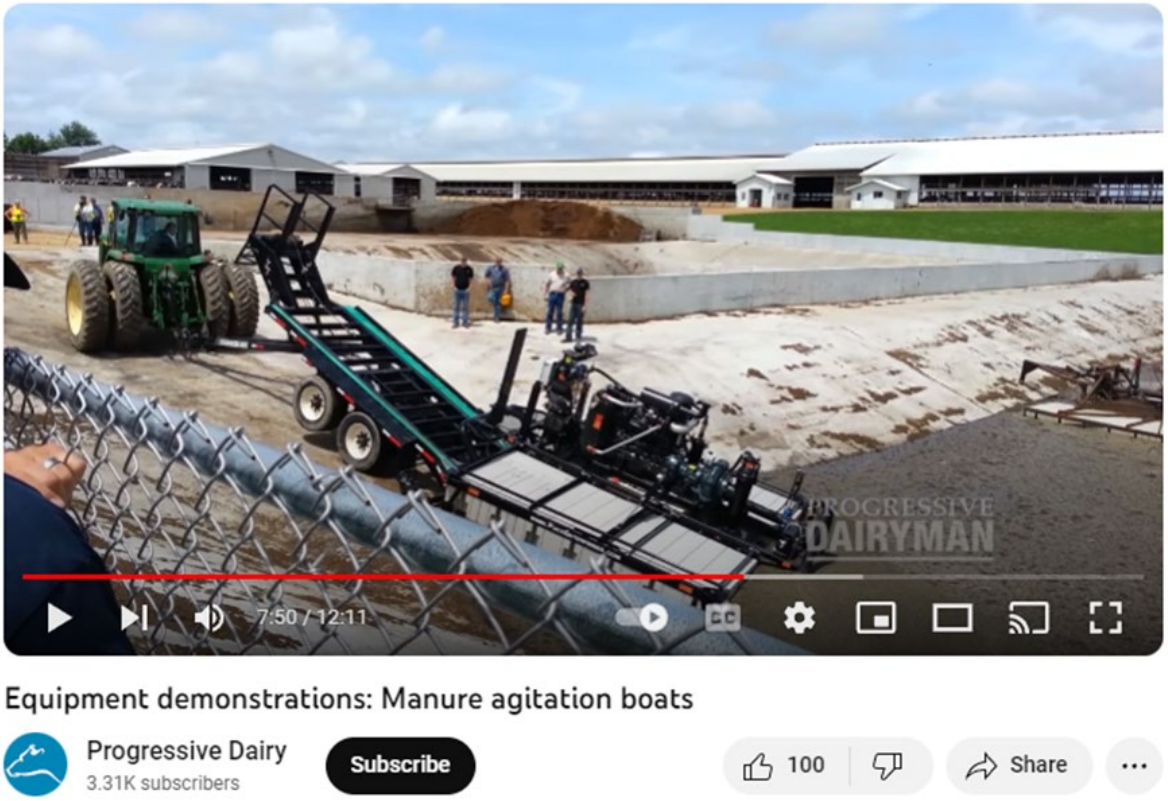

EX2008, p. 7.

193. In my opinion, POSITA would not have seen any problem with Puck's design in the first place that would have led them to look for the Bryham reference.

194. Furthermore, if a POSITA were concerned about "exposing a towing vehicle and trailer to highly corrosive environments" as Petitioner's expert argues (*see* EX1004, Winkel Decl., ¶335), they certainly would not have looked to substitute Puck's trailer, which did not need to be submersed in a manure lagoon, for a ground engaging propulsion structure that would be submersed in a manure lagoon the entire time the manure agitation vehicle was operating in the lagoon. In other words, if a POSITA were concerned that the "corrosive" environment of a manure lagoon might damage Puck's trailer and trailer wheels/bearings, that concern would lead them **away** from adding Bryham's wheels to Puck's manure lagoon agitation boat because the wheels, bearings, etc. of Bryham's ground engaging propulsion structure would be immersed and remain in the corrosive manure lagoon for the entire period of time during regular agitation sessions, which

often take multiple hours.

195. As a result, it is my opinion that Petitioner's combination of Puck and Bryham would not actually solve the alleged problem of equipment exposure to the corrosive manure lagoon environment. In fact, the opposite is true. A POSITA would expect corrosion problems to be worse if Bryham's wheels and associated steering, support, and propulsion structure were added to Puck's manure agitation boat.

E. A POSITA Would Not Have Had a Reasonable Expectation of Success in Combining Bryham With Puck

196. The manure agitation boat disclosed in Puck is designed to be launched and retrieved using a trailer:

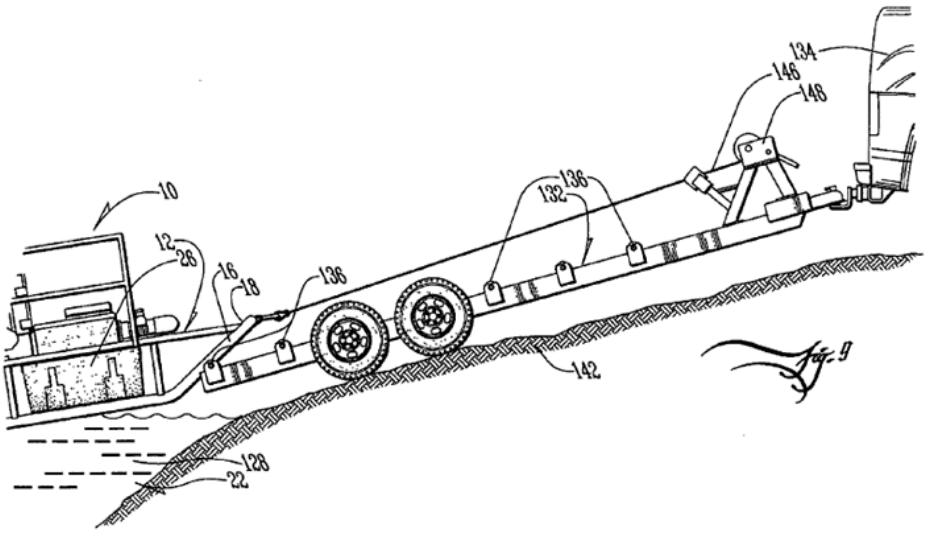

EX1014, Puck, Figs. 8 and 9. As a result, Puck fails to teach the limitation of Claim 1 reciting "ground engaging propulsion structure comprising a plurality of ground engaging elements powered by a hydraulic motor."

197. With respect to Ground 4, Petitioner's expert asserts that a POSITA would **add** Bryham's wheels to the manure agitation boat disclosed in Puck; however, in my opinion a POSITA would <u>not</u> have had a reasonable expectation of success in making this combination and achieving the claimed invention.

198. Bryham discloses a vee-hull boat with three wheels (one at the bow and two at the stern) that can retract and extend into and out of the boat hull:

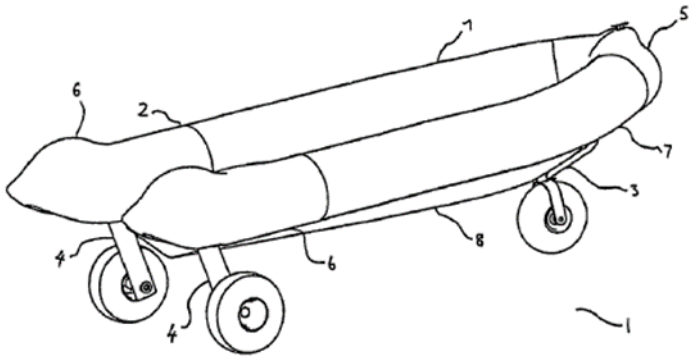

Figure 1

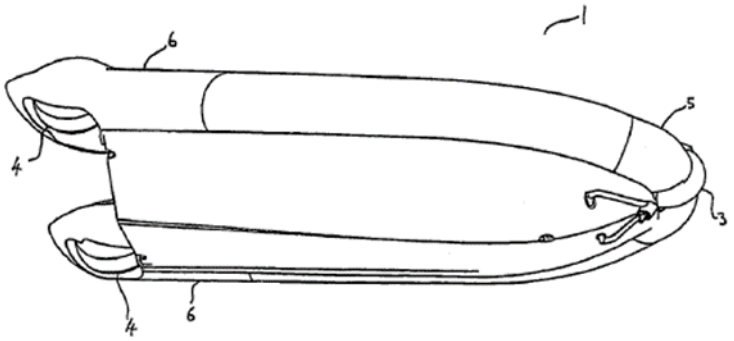

Figure 2

EX1015, Bryham, p. 2.

199. Unlike Bryham, Puck is more of a barge compared to a traditional boat and is constructed from modular floating dock sections 26 that are placed in a plurality of receiver slots 24 in a ladder-like frame 14:

(**10**) from a manure lagoon (**22**). (FIGS. **1-2**). The frame (**14**) defines a plurality of receiver slots (**24**) into which are provided modular dock sections (**26**), such as those known in the art. In the preferred embodiment, the dock sections (**26**) are 1000 series dock components manufactured by Connect-A-Dock, Inc. of Atlantic, Iowa.

[0023] The modular dock sections (**26**) are provided with connector slots (**28**) to fit into interlocking mating engagement with connector pins (**30**). The connector pins (**30**) allow the modular dock sections (**26**) to connect to additional dock sections (**32**) in a manner such as that known in the art. (FIGS. **1** and **3**). The use of interlocking additional dock sections (**32**) allows for the buoyancy of the vessel (**12**) to be increased and allows the additional dock sections (**32**) to be removed to reduce the overall width of the agitator (**10**) for transport and storage. If desired, pontoons, inflatable components or any

EX1014, Puck, ¶¶22-23.

200. The modular dock sections 26 in Puck are held together with connector pins 30:

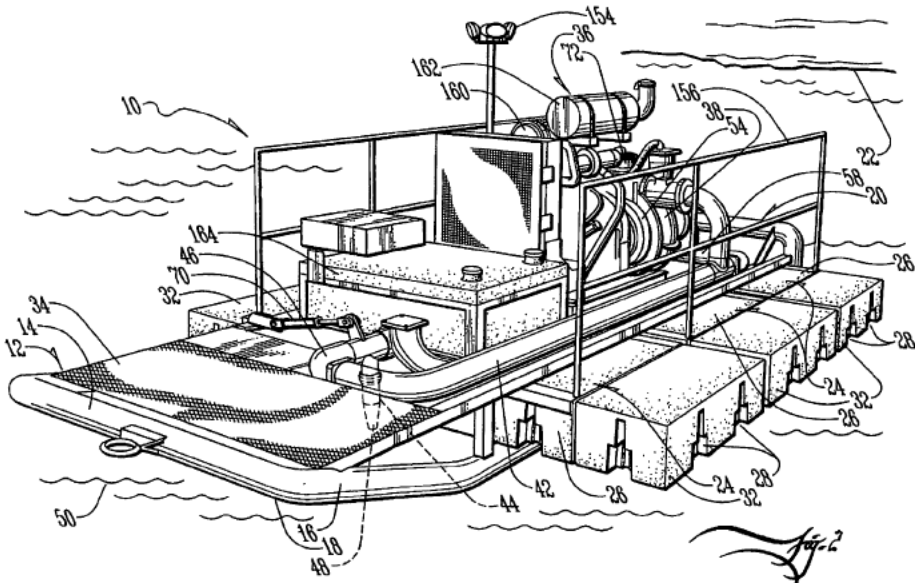

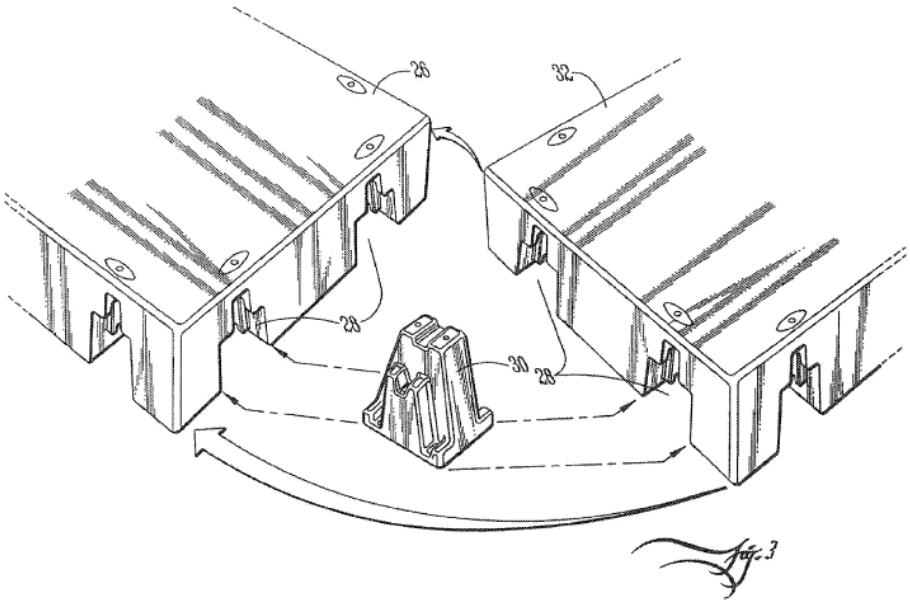

EX1014, Puck, pp. 3-4.

201. In view of this disclosure, a POSITA would not reasonably expect that Bryham's wheels could be successfully added to Puck's vessel. A POSITA would understand that adding Bryham's wheels would interfere with the modular dock sections required in Puck for floatation as the two could not occupy the same space.

202. In my opinion, a POSITA would also understand that Puck's vessel is not designed so that its entire weight can be carried at 3 discrete points (one in the front and two in the rear) as it would be if Bryham's wheels were added.

203. Puck's vessel is designed so that its weight is evenly distributed when it is on shore and on the trailer. The connector pins that hold the modular dock sections together slide into slots in the modular dock sections from the bottom and the connector pins are wider at the bottom than they are at the top. A POSITA would understand that this design gives the connection between the modular dock sections good weight carrying ability when they are floating, but it is not designed to hold the modular dock sections together when they are suspended above the ground, as they would be if Bryham's wheels were added.

204. Finally, Petitioner's expert readily acknowledges that manure lagoons – the

environment in which Puck's vessel operates – often have steep and slippery embankments:

> A POSA would have understood that manure lagoons often do not have a designated paved ramp for launching and retrieving vehicles and that the embankments surrounding lagoons are often steep and may be muddy or covered in vegetation. EX1040, 55. The Northeast Regional Agricultural Engineering Service notes that outside bank slopes may be as steep as 3:1.

EX1004, Winkel Decl., ¶¶334, 336. But Petitioner's expert does not explain why a POSITA would have expected the 3-wheel design disclosed in Bryham to provide Puck's vessel with the capability of traversing these steep and slippery embankments.

205. In my opinion, a POSITA would not reasonably expect that Puck's vessel could successfully drive into and out of manure lagoons even if Bryham's wheels could be added. A POSITA would expect Bryham's 3-wheel design to be inherently unstable, i.e., prone to tipping if used on steep and uneven terrain. A POSITA would also expect the one small steerable front wheel in Bryham to be prone to sliding in this operating environment and would be ineffective in turning the vehicle. Finally, a POSITA would not expect Bryham's 3-wheel design, with only two powered wheels at the stern, to provide sufficient traction through mud and manure. As a result, Petitioner's expert has failed to demonstrate that a POSITA would reasonably expect that Puck's vessel could successfully traverse the steep and slippery embankments when entering and exiting manure lagoons if Bryham's wheels were added to Puck's vessel.

206. In my opinion, a POSITA would recognize that the instability, steering, and traction issues with Bryham's ground engaging wheels would be exacerbated if remote control were added because remote control is less precise, has greater delay (latency), and it is much more difficult for the operator to perceive and counter tipping (i.e., remote control operators lack tactile feedback through the controls and or an on-board perception of sliding and tipping). While the operator might not get hurt if a remote-control vehicle tips, tipping creates a considerable set back as the remote control vehicle can become damaged by tipping and manned heavy equipment would likely

be necessary to extract the vehicle from the manure lagoon and/or right the vehicle. This tilting risk would dissuade a POSITA from adding Bryham's wheels to the remote-controlled manure agitation boat disclosed in Puck.

XV. GROUND 5: CLAIMS 1-21 ARE NOT OBVIOUS BASED ON PUCK IN VIEW OF BRYHAM AND BENNETT-II

207. In the following sections I examine various claim elements of the '425 Patent and explain why at least Claim 1 is not rendered obvious by Puck in view of Bryham and Bennett-II ("the Puck-Bryham-Bennett Combination"). Claims 2-21 depend from Claim 1 and are not rendered obvious by the Puck-Bryham-Bennett Combination for at least the same reasons.

A. The Puck-Bryham-Bennett Combination Fails to Disclose or Suggest a "Power Source Configured to Provide Power to Both the Ground Engaging Propulsion Structure and the Fluid Pump"

208. Neither Puck, Bryham, nor Bennett-II disclose "a power source that provides power to both a manure pump and a ground engaging propulsion structure" as required by the language of Claim 1.

209. Petitioner's expert argues that a POSITA would be motivated to use Puck's power source to also power the wheels being added by Bryham:

> 348. A POSA would have been motivated to use the same internal combustion engine of Puck to power the land-based propulsion system of Bryham because it would be less expensive, more efficient, take up less space, and weigh less than providing two separate engines, one for the fluid pump and one for the hydraulic pump for land-propulsion. Further, the diesel engine of Puck would be more than sufficient to power the land-based propulsion, which Puck teaches could be as high as 2000 HP. EX1014, ¶[0024].

EX1004, Winkel Decl., p. 194; *see also* Petition, p. 77. But Petitioner's expert does not actually show or explain why the claimed arrangement "would be less expensive, more efficient, take up less space, and weigh less."

210. In my opinion, a POSITA would not find the claimed arrangement, where the power source powers both a manure pump and a hydraulic pump that powers the hydraulic motors of the ground engaging propulsion structure to be obviously "less expensive, more efficient, take up less space, and weigh less" than the other potential options disclosed in Bryham. For example, one of the preferred embodiments disclosed in Bryham utilizes separate electric motors to power Bryham's wheels. EX1015, Bryham, col. 16, ln. 13-27. Petitioner's expert appears to be relying on hindsight bias rather than the teachings in the prior art references themselves to conclude that the claimed arrangement is obviously the best.

B. The Puck-Bryham-Bennett Combination Fails to Disclose "Wireless Remote Control Configured to … (1) Control the Ground Engaging Propulsion Structure"

211. Puck's remote-control system is limited to turning the engine on and off, controlling engine speed, turning the nozzles on and off, and controlling nozzle direction. *See* EX1014, Puck, ¶¶[0032]-[0033]. Puck also lacks any sort of ground engaging propulsion structure. As a result, Puck's remote-control system does not provide "wireless remote control configured to enable an operator who is remote from the vehicle to … (1) control the ground engaging propulsion structure" as required by the language of Claim 1.

212. Petitioner's expert argues that a POSITA would have been motivated to configure the remote-control steering system of Puck to control the speed and direction of the ground engagement means of Bryham while the vehicle is ground engaging. EX1004, Winkel Decl., ¶¶349-350. But this argument fails to address whether a POSITA would have a reasonable expectation that Puck's remote-control system could be used for control over Bryham's steering and propulsion system (i.e., Bryham's wheels). Petitioner's expert further states that Bennett-II's

teachings of remote control support this modification of Puck and Bryham. I disagree.

213. Bennett-II teaches an amphibious vehicle 10 with a pair of tracks 12, 14 that are driven by two drive units 590, 592 through a transmission 550 that is powered by a single engine 502.

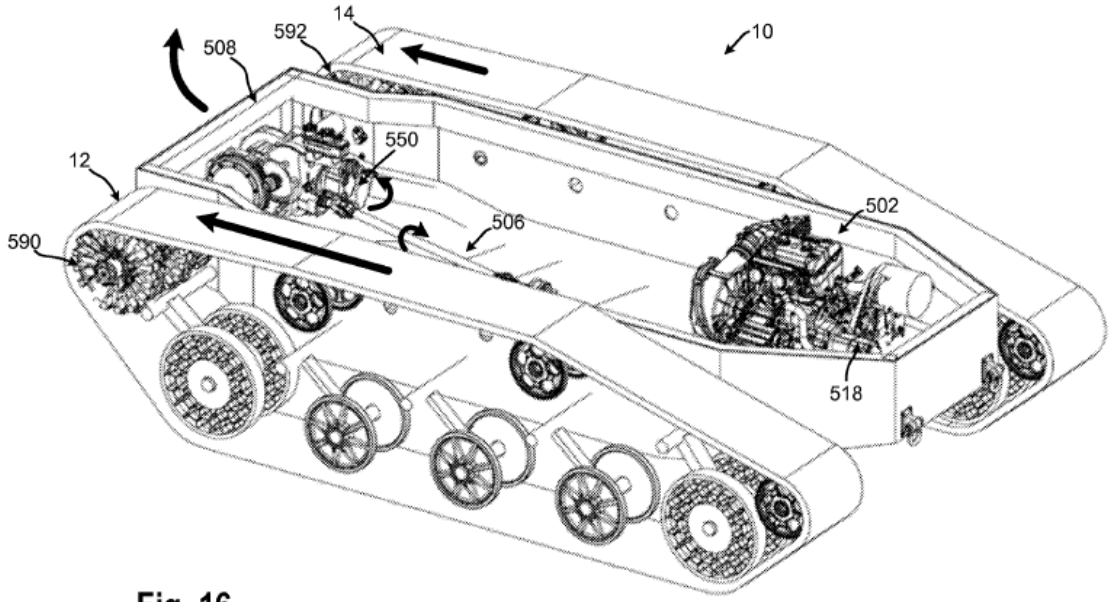

Fig. 16

EX1017, Bennett, p. 22.

214. The fact that paragraph [0043] of Bennett-II provides the generalized statement that "vehicle 10 may be operated by remote control" tells a POSITA nothing about how one could modify Puck's remote-control system to control Bryham's 3-wheeled ground engagement system, which is substantially different from Bennett-II's drivetrain.

C. The Puck-Bryham-Bennett Combination Fails to Disclose a Submersible Pump Housing With At Least Two Tangential Fluid Outlets

215. I have also considered whether the Puck-Bryham-Bennett Combination meets all of the limitations of Claim 1 if the language reciting "a fluid pump for pumping liquid manure" is construed as a means-plus-function claim limitation. Under that construction, it is my opinion that

the Puck-Bryham-Bennett Combination fails to disclose the structure described in the '425 Patent specification that performs the function of "pumping liquid manure."

216. As explained above, the structure described in the '425 Patent specification that performs the function of "pumping liquid manure" is: "a pump housing configured for immersion within the liquid manure, the pump housing has a bottom fluid inlet and at least two tangential fluid outlets, and an impeller that draws the liquid manure to be pumped through the bottom fluid inlet of the pump housing."

217. Puck describes its slurry pump 38 as a Cornell Redi-Prime centrifugal pump with a single inlet and a single outlet. As shown below, this pump 38 does not have "a pump housing configured for immersion within the liquid manure" or "at least two tangential fluid outlets" as required by the structure recited in the '425 Patent specification for the "fluid pump" means-plus-function limitation:

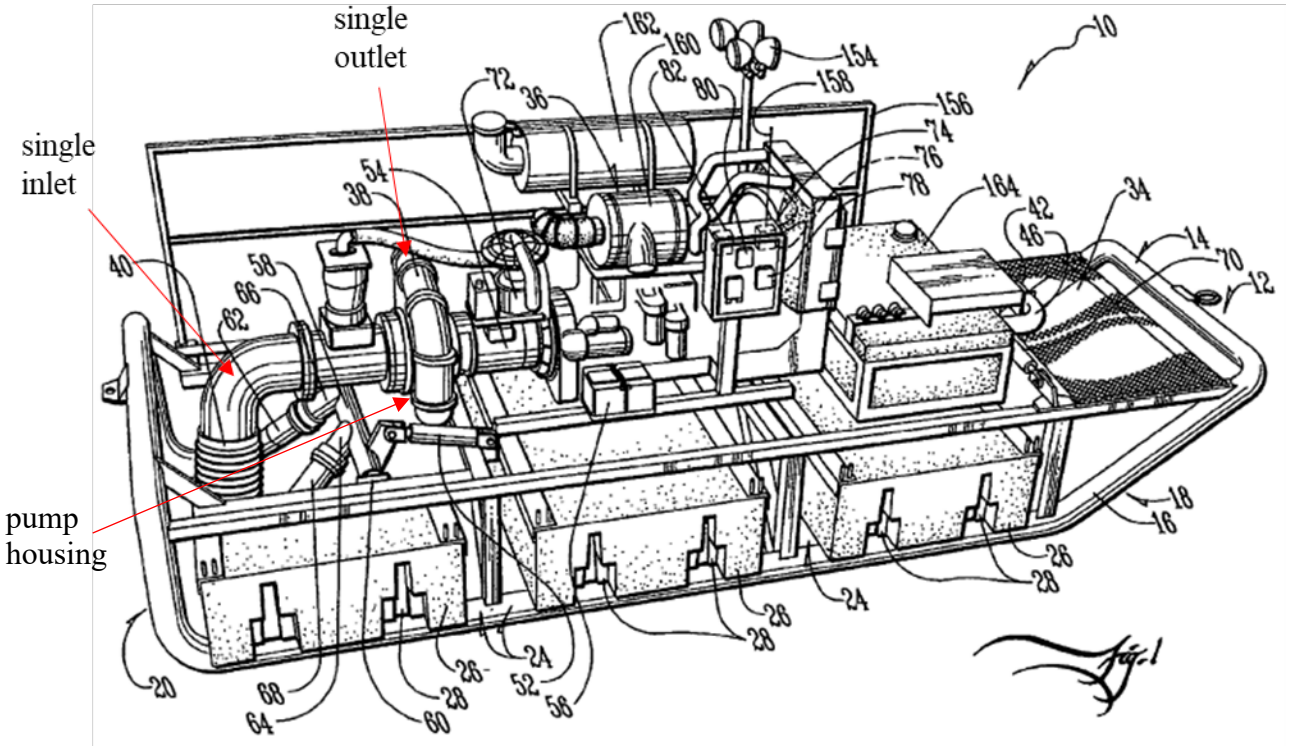

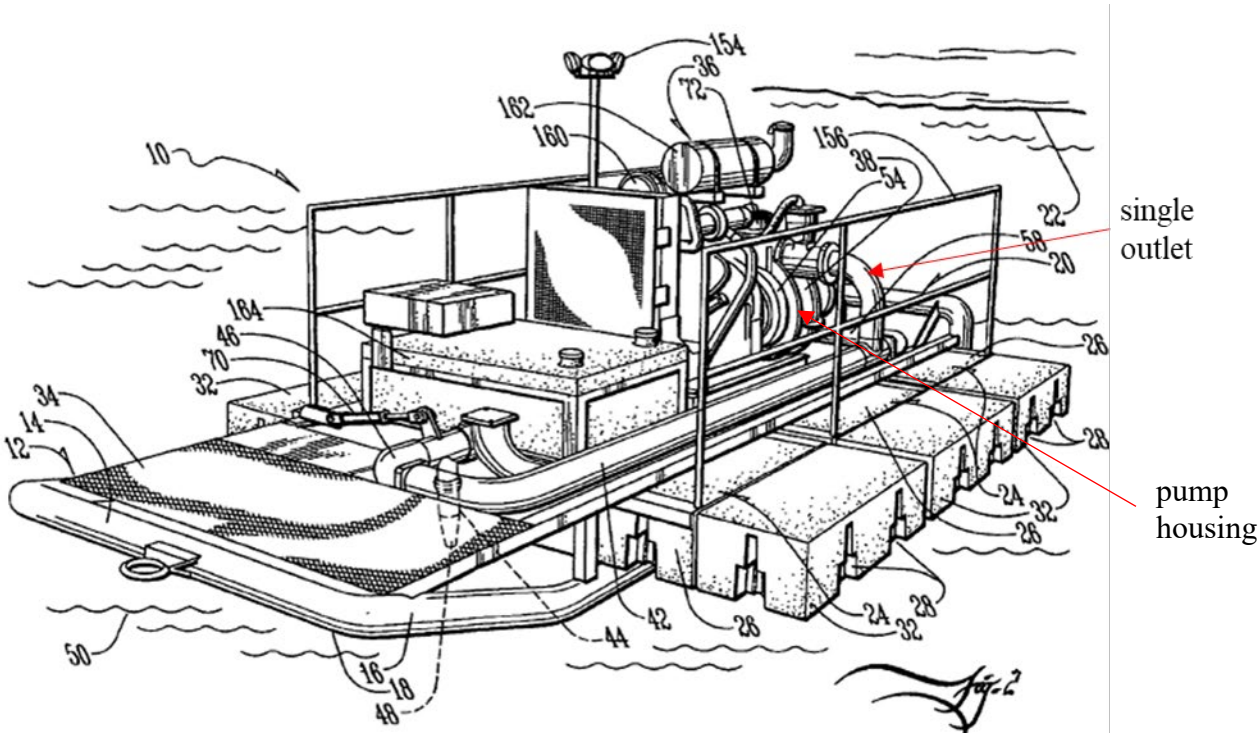

EX1014, Puck, pp. 2-3.

218. The pump housing of Puck's slurry pump 38 is also not "configured for immersion within the liquid manure." As shown in Figures 2 and 4 of Puck, the pump housing of the slurry pump 38 is above the manure lagoon 22 and above the crust 126. Nor does the pump housing of Puck's slurry pump 38 have a "bottom fluid inlet." Rather, Puck shows its slurry pump 38 with a side fluid inlet that is connected to a "downwardly directed intake pipe (40)." EX 1014 Puck, ¶ [0026], Figures 1, 4, 6, and 8.

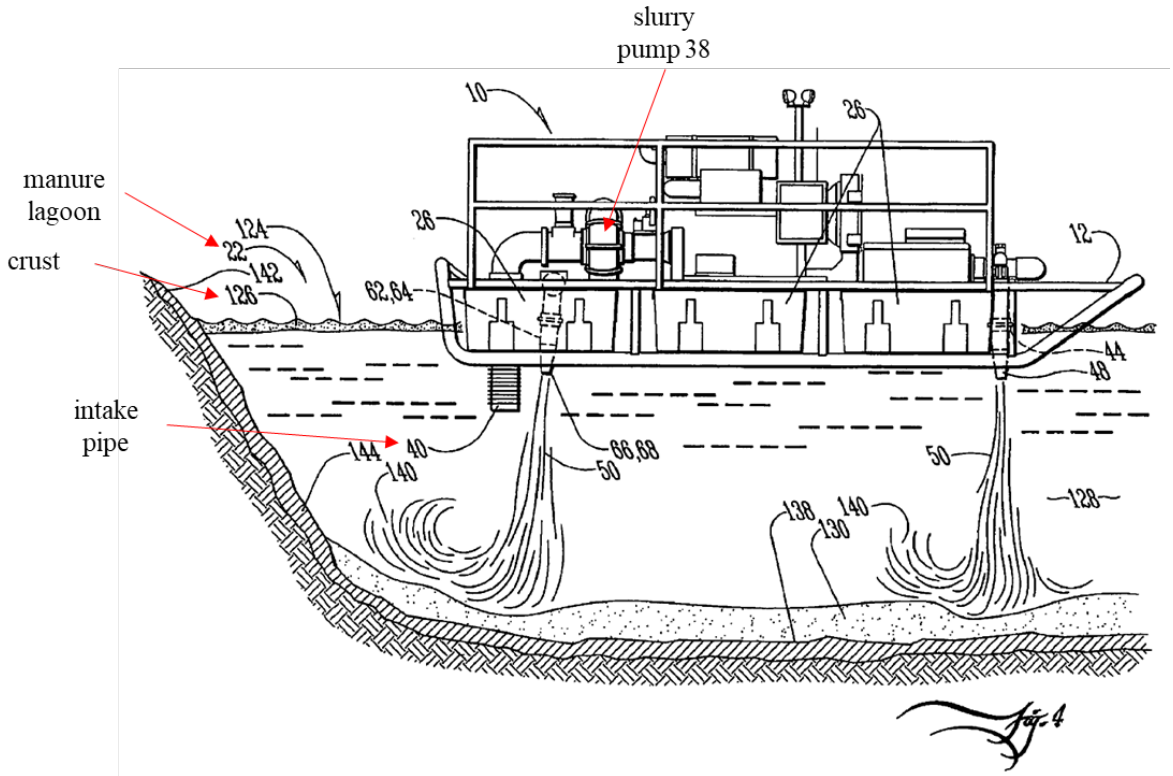

EX1014, Puck, pp. 5.

219. Neither Bryham nor Bennett-II cures these deficiencies as neither reference discloses a pump for pumping liquid manure.

220. As a result, the Puck-Bryham-Bennett Combination does not disclose or suggest a fluid pump with a pump housing with at least two tangential fluid outlets.

D. A POSITA Would Not Have Possessed a Motivation to Combine Puck, Bryham, and Bennett-II

221. Petitioner's expert incorrectly asserts that a POSITA would have been motivated to combine the teachings of Puck with the teachings of Bryham "to make the process of launching and retrieving the Puck boat from the manure lagoon safer and easier without having to place a trailer or one's feet into the hazardous and corrosive manure lagoon." EX1004, ¶331. Neither of these reasons/flaws in Puck's design are actually supported by Puck's disclosure. And Bennett-II does not correct these problem or provide any additional motivation to add Bryham's wheels to

Puck.

222. As shown in the annotated image below from Paragraph 332 of the Winkel Declaration, Puck actually discloses a system where the manure agitation boat can be launched and retrieved **without** backing the trailer into the manure lagoon:

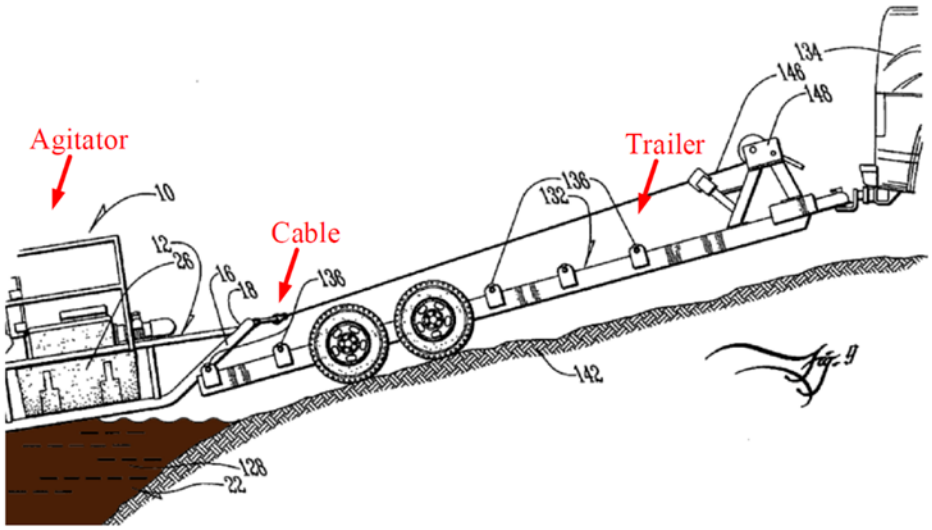

(*Id.*, FIG. 9 (annotated).)

EX1004, Winkel Decl., ¶332.

223. A POSITA would recognize that the process of launching and retrieving Puck's boat does not require placing "a trailer or one's feet into the hazardous and corrosive manure lagoon" as Petitioner's expert incorrectly argues. Indeed, nothing of the sort is shown or described in Puck's disclosure.

224. My opinion in this regard is further informed by the manure boat demonstration video published by Progressive Dairyman (EX2008), where neither the trailer or the operator is shown entering the lagoon when Puck's boat is launched in the video:

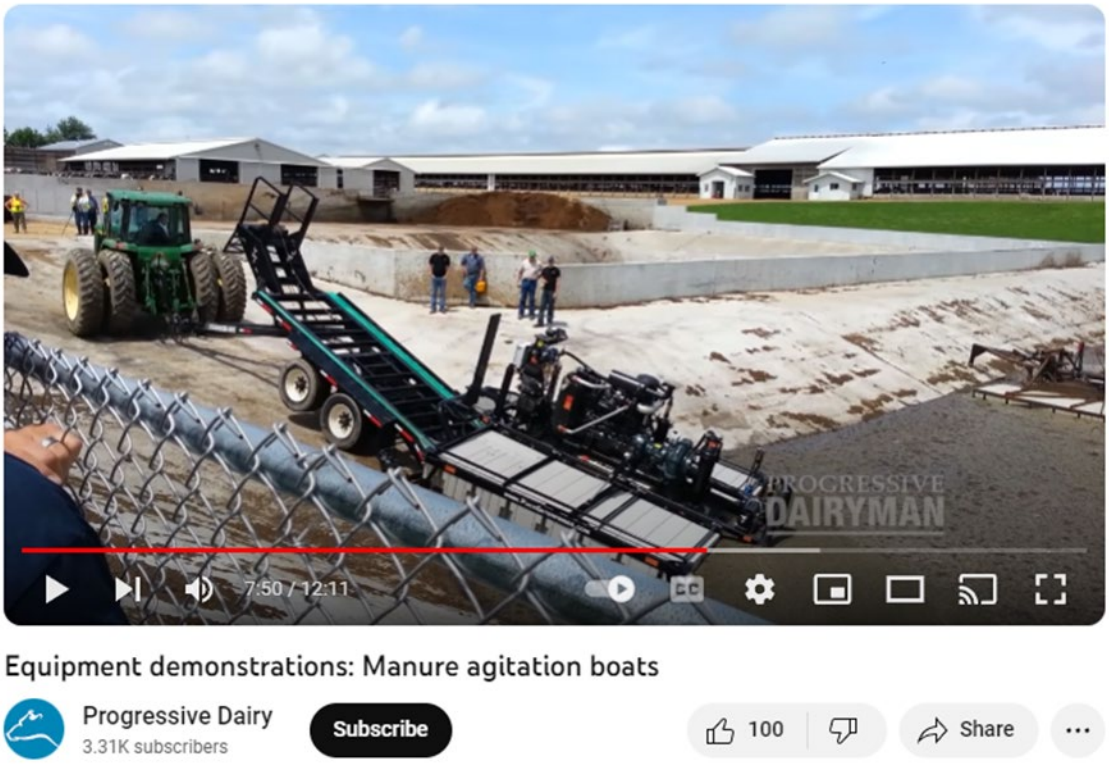

EX2008, p. 7.

225. In my opinion, POSITA would not have seen any problem with Puck's design in the first place that would have led them to look for the Bryham reference. Bennett-II's disclosure of remote control does not change the fact that the "problems" Petitioner's expert points to in Puck did not actually exist.

226. Furthermore, if a POSITA were concerned about "exposing a towing vehicle and trailer to highly corrosive environments" as Petitioner's expert argues (*see* EX1004, Winkel Decl., ¶335), they certainly would not have looked to substitute Puck's trailer, which did not need to be submersed in a manure lagoon, for a ground engaging propulsion structure that would be submersed in a manure lagoon the entire time the manure agitation vehicle was operating in the lagoon. In other words, if a POSITA were concerned that the "corrosive" environment of a manure lagoon might damage Puck's trailer and trailer wheels/bearings, that concern would lead them **away** from adding Bryham's wheels to Puck's manure lagoon agitation boat because the wheels,

bearings, etc. of Bryham's ground engaging propulsion structure would be immersed and remain in the corrosive manure lagoon for the entire period of time during regular agitation sessions, which often take multiple hours. Nor does Bennett-II suggest that corrosion would not be a problem if the Puck-Bryham-Bennett-II Combination were made.

227. As a result, it is my opinion that Petitioner's combination of Puck, Bryham, and Bennett-II would not actually solve the alleged problem of equipment exposure to the corrosive manure lagoon environment. In fact, the opposite is true. A POSITA would expect corrosion problems to be worse if Bryham's wheels and associated steering, support, and propulsion structure were added to Puck's manure agitation boat.

E. A POSITA Would Not Have Had a Reasonable Expectation of Success in Combining Bryham and Bennett-II With Puck

228. The manure agitation boat disclosed in Puck is designed to be launched and retrieved using a trailer:

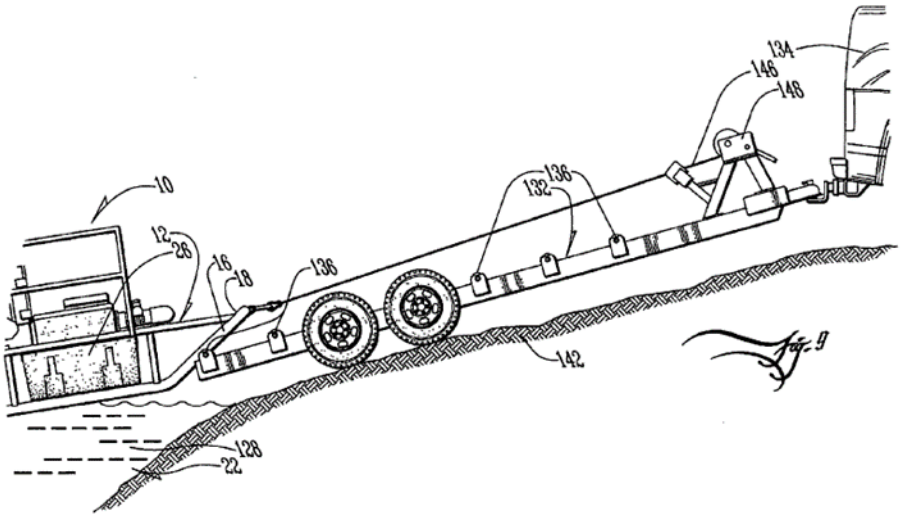

EX1014, Puck, Figs. 8 and 9. As a result, Puck fails to teach the limitation of Claim 1 reciting "ground engaging propulsion structure comprising a plurality of ground engaging elements powered by a hydraulic motor."

229. With respect to Ground 5, Petitioner's expert asserts that a POSITA would **add**

Bryham's wheels to the manure agitation boat disclosed in Puck and controlling Bryham's wheels using remote-control as generally discussed in Bennett-II; however, in my opinion a POSITA would not have had a reasonable expectation of success in making this combination and achieving the claimed invention.

230. Bryham discloses a vee-hull boat with three wheels (one at the bow and two at the stern) that can retract and extend into and out of the boat hull:

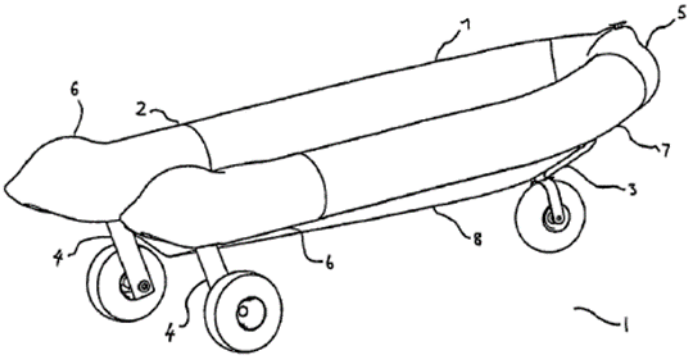

Figure 1

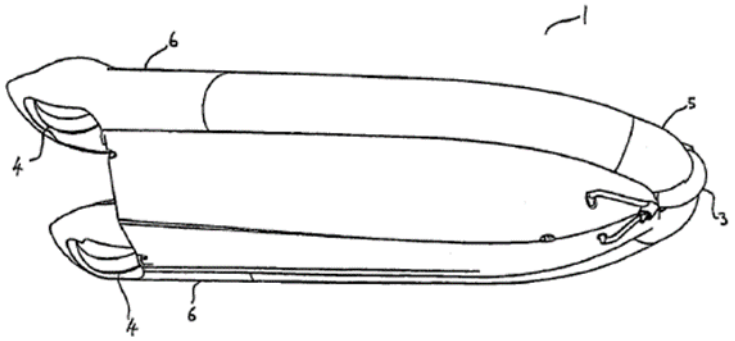

Figure 2

EX1015, Bryham, p. 2.

231. Unlike Bryham, Puck is more of a barge compared to a traditional boat and is constructed from modular floating dock sections 26 that are placed in a plurality of receiver slots 24 in a ladder-like frame 14:

(**10**) from a manure lagoon (**22**). (FIGS. **1-2**). The frame (**14**) defines a plurality of receiver slots (**24**) into which are provided modular dock sections (**26**), such as those known in the art. In the preferred embodiment, the dock sections (**26**) are 1000 series dock components manufactured by Connect-A-Dock, Inc. of Atlantic, Iowa.

[0023] The modular dock sections (**26**) are provided with connector slots (**28**) to fit into interlocking mating engagement with connector pins (**30**). The connector pins (**30**) allow the modular dock sections (**26**) to connect to additional dock sections (**32**) in a manner such as that known in the art. (FIGS. **1** and **3**). The use of interlocking additional dock sections (**32**) allows for the buoyancy of the vessel (**12**) to be increased and allows the additional dock sections (**32**) to be removed to reduce the overall width of the agitator (**10**) for transport and storage. If desired, pontoons, inflatable components or any

EX1014, Puck, ¶¶ [0022]-[0023].

232. The modular dock sections 26 in Puck are held together with connector pins 30:

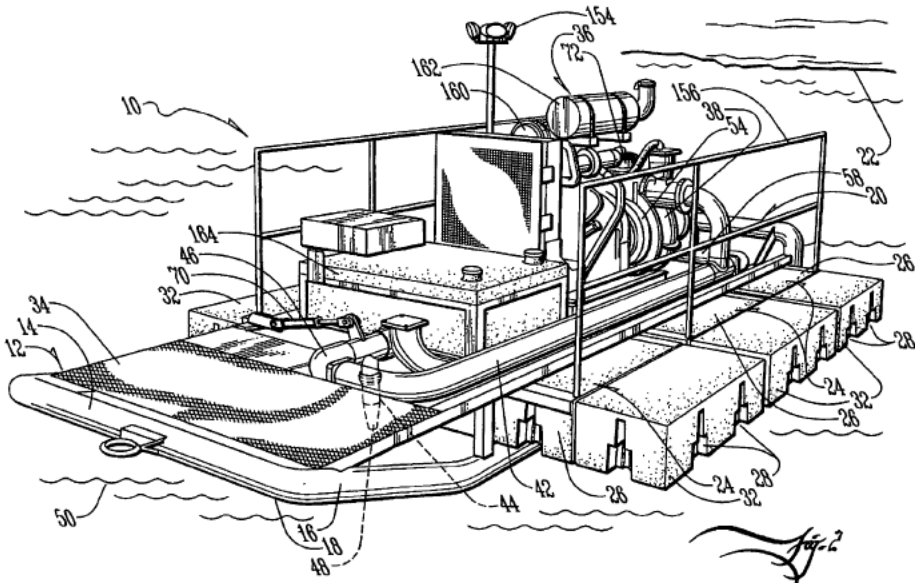

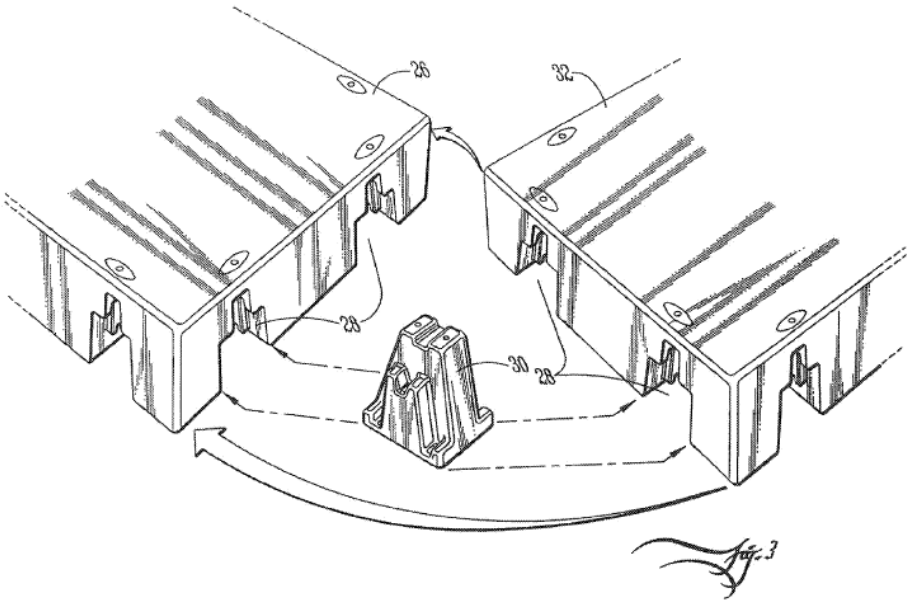

EX1014, Puck, pp. 3-4.

233. In view of this disclosure, a POSITA would not reasonably expect that Bryham's wheels could be successfully added to Puck's vessel. A POSITA would understand that adding Bryham's wheels would interfere with the modular dock sections required in Puck for floatation as the two could not occupy the same space.

234. In my opinion, a POSITA would also understand that Puck's vessel is not designed so that its entire weight can be carried at 3 discrete points (one in the front and two in the rear) as it would be if Bryham's wheels were added.

235. Puck's vessel is designed so that its weight is evenly distributed when it is on shore and on the trailer. The connector pins that hold the modular dock sections together slide into slots in the modular dock sections from the bottom and the connector pins are wider at the bottom than they are at the top. A POSITA would understand that this design gives the connection between the modular dock sections good weight carrying ability when they are floating, but it is not designed to hold the modular dock sections together when they are suspended above the ground, as they would be if Bryham's wheels were added.

236. Finally, Petitioner's expert readily acknowledges that manure lagoons – the

environment in which Puck's vessel operates – often have steep and slippery embankments:

> A POSA would have understood that manure lagoons often do not have a designated paved ramp for launching and retrieving vehicles and that the embankments surrounding lagoons are often steep and may be muddy or covered in vegetation. EX1040, 55. The Northeast Regional Agricultural Engineering Service notes that outside bank slopes may be as steep as 3:1.

EX1004, Winkel Decl., ¶¶334, 336. But Petitioner's expert does not explain why a POSITA would have expected the 3-wheel design disclosed in Bryham to provide Puck's vessel with the capability of traversing these steep and slippery embankments.

237. In my opinion, a POSITA would not reasonably expect that Puck's vessel could successfully drive into and out of manure lagoons even if Bryham's wheels could be added. A POSITA would expect Bryham's 3-wheel design to be inherently unstable, i.e., prone to tipping if used on steep and uneven terrain. A POSITA would also expect the one small steerable front wheel in Bryham to be prone to sliding in this operating environment and would be ineffective in turning the vehicle. Finally, a POSITA would not expect Bryham's 3-wheel design, with only two powered wheels at the stern, to provide sufficient traction through mud and manure. As a result, Petitioner has failed to demonstrate that a POSITA would reasonably expect that Puck's vessel could successfully traverse the steep and slippery embankments when entering and exiting manure lagoons if Bryham's wheels were added to Puck's vessel.

238. In my opinion, a POSITA would recognize that the instability, steering, and traction issues with the Bryham's ground engaging wheels would be exacerbated if remote control were added because remote control is less precise, greater delay (latency) and it is much more difficult for the operator to perceive and counter tipping (i.e., remote control operators lack tactile feedback through the controls and or an on-board perception of sliding and tipping). While the operator might not get hurt if a remote control vehicle tips, tipping creates a considerable set back as the remote control vehicle can become damaged by tipping and manned heavy equipment would likely

be necessary to extract the vehicle from the manure lagoon and/or right the vehicle. This tilting risk would dissuade a POSITA from adding Bryham's wheels to the remote-controlled manure agitation boat disclosed in Puck.

239. The generalized statement in paragraph [0043] of Bennett-II that its "vehicle 10 may be operated by remote control" would not inform a POSITA that Puck's remote-control system could successfully be modified to control Bryham's 3-wheeled ground engagement system, which is substantially different from Bennett's drivetrain. Moreover, a POSITA would consider Bryham's 3-wheeled ground engagement system to be even less stable and provide considerably worse traction and steering than the pair of tracks disclosed in Bennett-II. As a result, a POSITA would have greater reservations in adding remote control to Bryham's 3-wheeled ground engagement system than adding remote control to Bennett-II.

XVI. GROUND 6: CLAIMS 1-21 ARE NOT ANTICIPATED BY LYSENG

240. Lyseng [EX1019] appears to be an August 29, 2013 article describing the Patent Owner's own commercial embodiment of the patented vehicle. Lyseng does not appear to be prior art to the '425 Patent because it is dated August 29, 2013 – which is ten days **after** the Patent Owner filed its provisional patent application on August 19, 2013. Because this threshold issue does not appear to be satisfied, I have not been asked to provide any opinions or analysis on Lyseng at this time, but may at a later date should the need arise.

XVII. CONCLUSION

241. Based on my analysis, it is my opinion that the cited art does not anticipate or render obvious any of the Challenged Claims of the '425 Patent.

242. I declare that all statements made herein of my knowledge are true, and that all statements made on information and belief are believed to be true, and that these statements were made with the knowledge that willful false statements and the like so made are punishable by fine or imprisonment, or both, under Section 1001 of Title 18 of the United States Code.

Dated: October 10, 2023

Douglas S. Prairie