US 20150202003A1

(19) United States

(12) Patent Application Publication

WOLF et al.

(10) Pub. No.: US 2015/0202003 A1

(43) Pub. Date: Jul. 23, 2015

(54) **POST NASAL DRIP TREATMENT**

(71) Applicant: **AERIN MEDICAL INC.**, Sunnyvale, CA (US)

(72) Inventors: **Scott J. WOLF**, Menlo Park, CA (US); **Andrew FRAZIER**, Sunnyvale, CA (US)

(73) Assignee: **AERIN MEDICAL, INC.**

(21) Appl. No.: **14/675,689**

(22) Filed: **Mar. 31, 2015**

Related U.S. Application Data

(63) Continuation-in-part of application No. 14/319,087, filed on Jun. 30, 2014, which is a continuation-in-part of application No. 13/495,844, filed on Jun. 13, 2012, now Pat. No. 8,936,594.

(60) Provisional application No. 61/974,534, filed on Apr. 3, 2014, provisional application No. 61/603,864, filed on Feb. 27, 2012, provisional application No. 61/496,930, filed on Jun. 14, 2011.

Publication Classification

(51) **Int. Cl.**

A61B 18/14	(2006.01)
A61M 25/10	(2006.01)
A61B 18/02	(2006.01)

(52) **U.S. Cl.**

CPC ***A61B 18/1492*** (2013.01); ***A61B 18/02*** (2013.01); ***A61M 25/10*** (2013.01); *A61B 2018/0293* (2013.01); *A61B 2018/00994* (2013.01)

(57) **ABSTRACT**

Systems and methods for treating a patient's mucus hypersecretion condition are disclosed herein. Certain implementations may involve a method for reducing mucus secretion in an upper airway of a patient to treat at least one of post nasal drip or chronic cough. The method may include advancing a treatment delivery portion of an energy-based treatment device into a nostril of the patient. The treatment delivery portion may contact mucosal tissue of the upper airway without piercing the mucosal tissue. The treatment delivery portion may deliver treatment to at least one tissue selected from the group of the mucosal tissue and another tissue underlying the mucosal tissue to modify a property of the at least one tissue and thus treat at least one of post nasal drip or chronic cough in the patient.

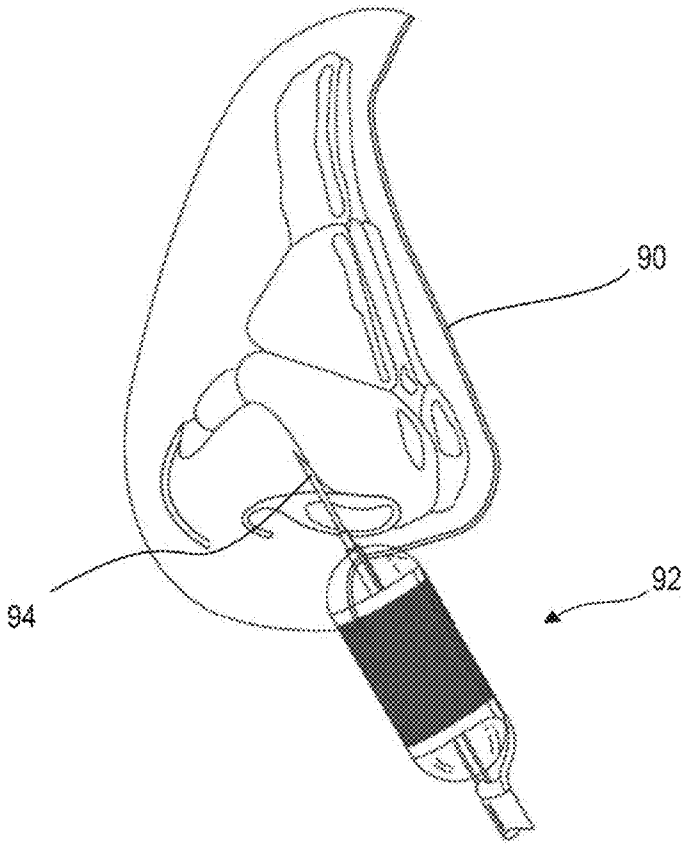

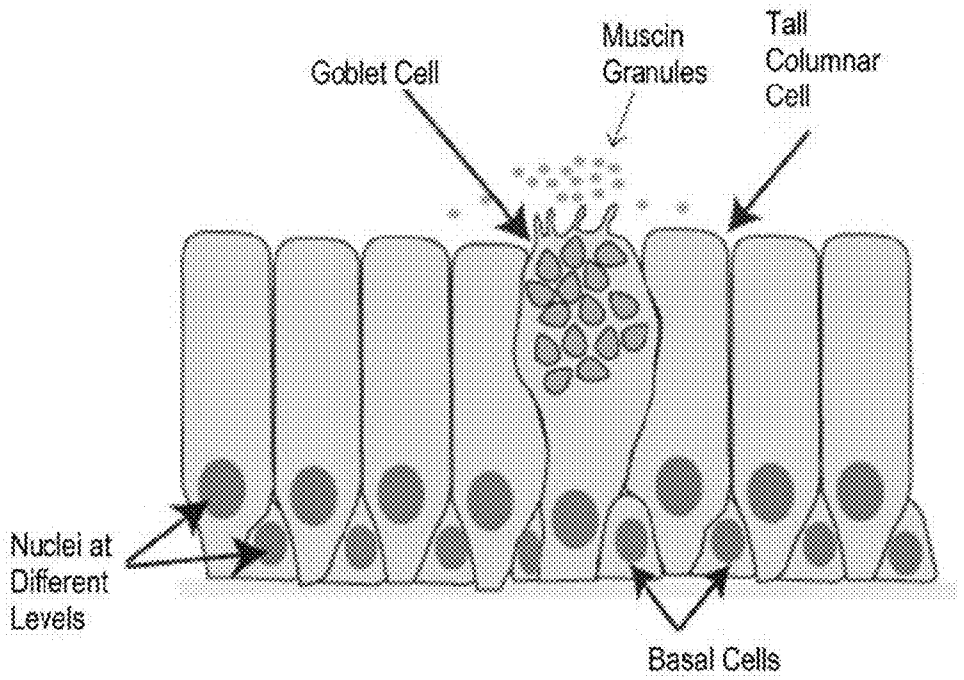
Goblet Cell
Muscin Granules
Tall Columnar Cell
Nuclei at Different Levels
Basal Cells

FIG. 1

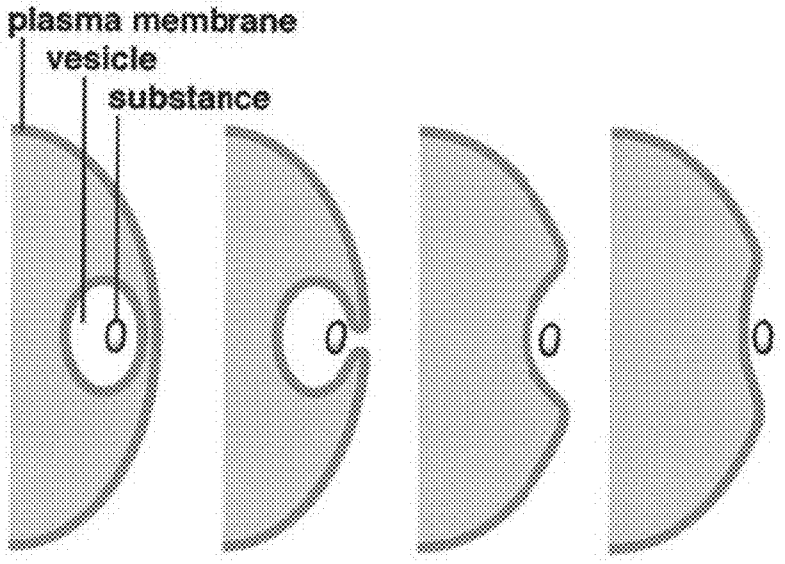
plasma membrane
vesicle
substance

FIG. 2

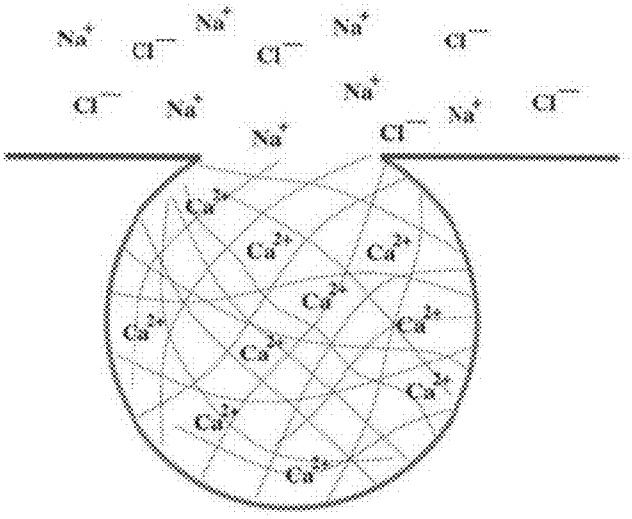
Na^+
Cl^-
Na^+
Cl^-
Na^+
Cl^-
Cl^-
Na^+
Na^+
Na^+
Cl^-
Na^+
Cl^-
Ca^{2+}
Ca^{2+}
Ca^{2+}
Ca^{2+}
Ca^{2+}
Ca^{2+}
Ca^{2+}
Ca^{2+}
Ca^{2+}
Ca^{2+}

FIG. 3

FIG. 4A

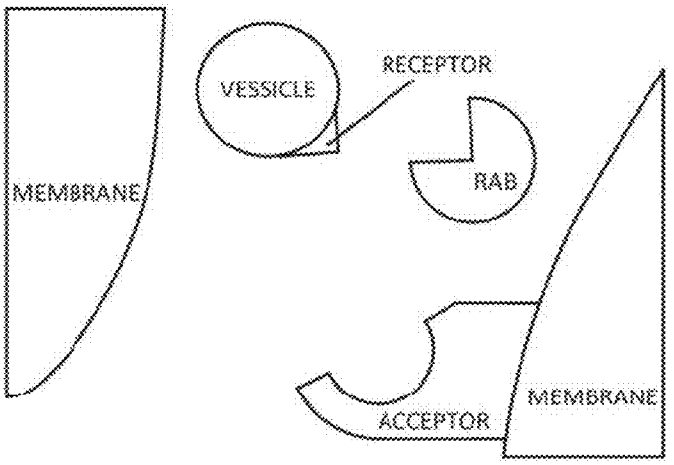

FIG. 4B

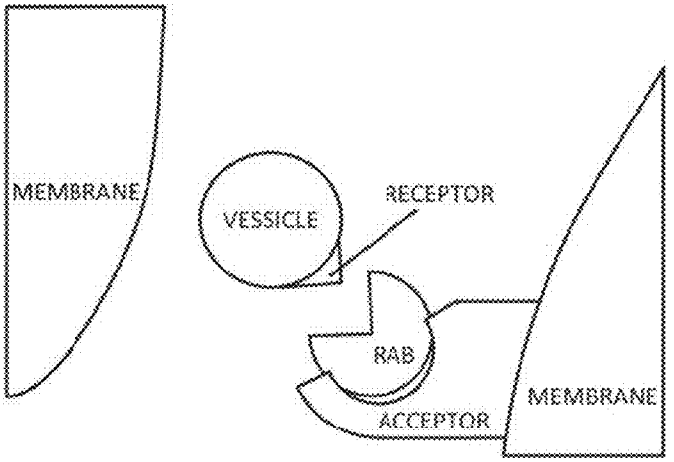

FIG. 4C

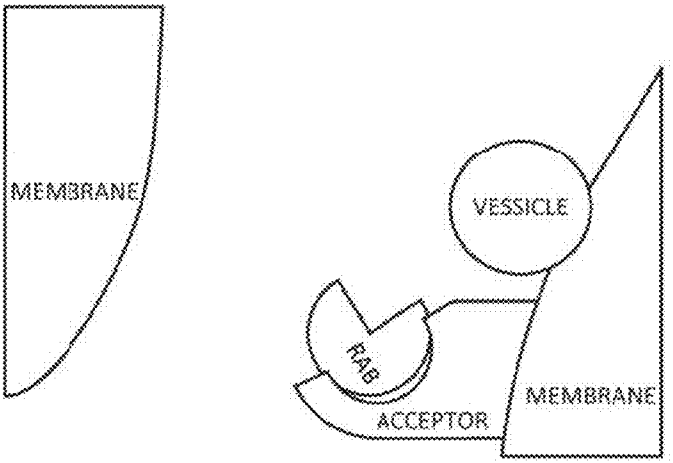

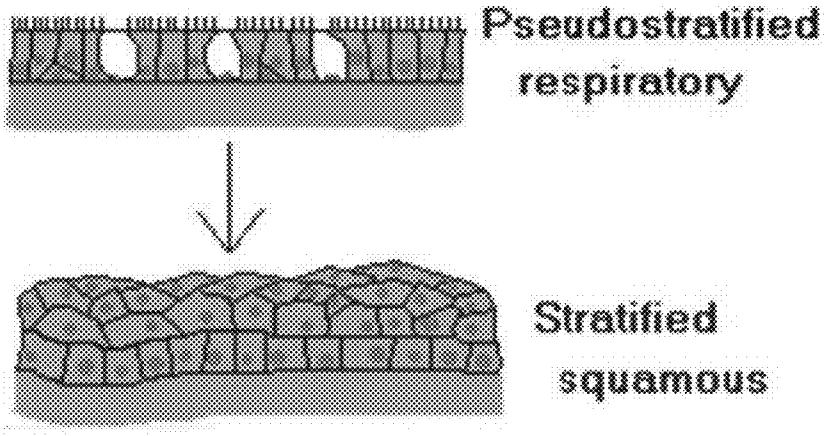
Pseudostratified
respiratory
Stratified
squamous

FIG. 5

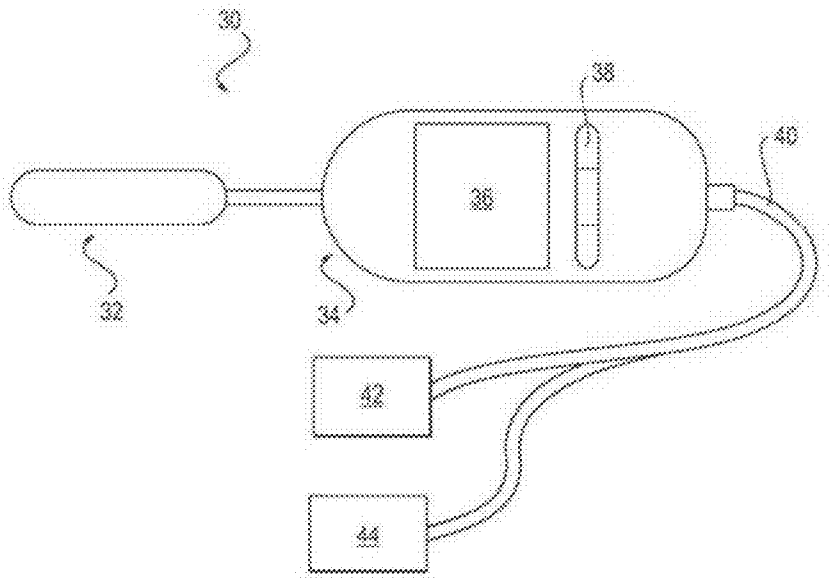
30
38
40
36
32
34
42
44

FIG. 6

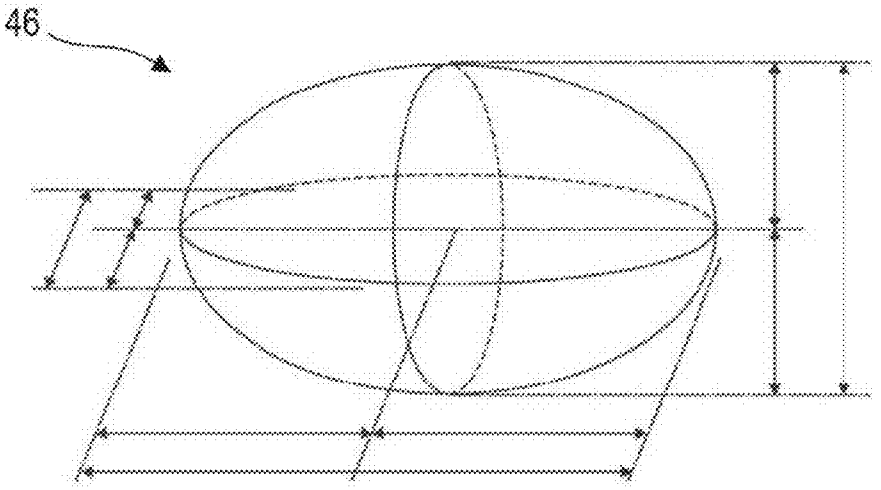

FIG. 7

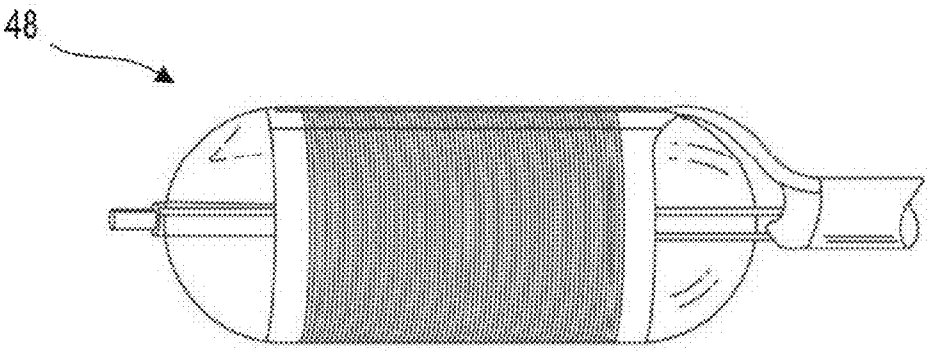

FIG. 8

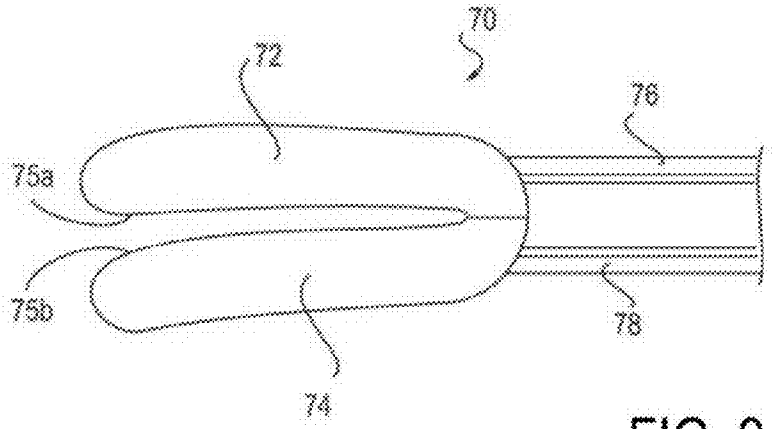

FIG. 9

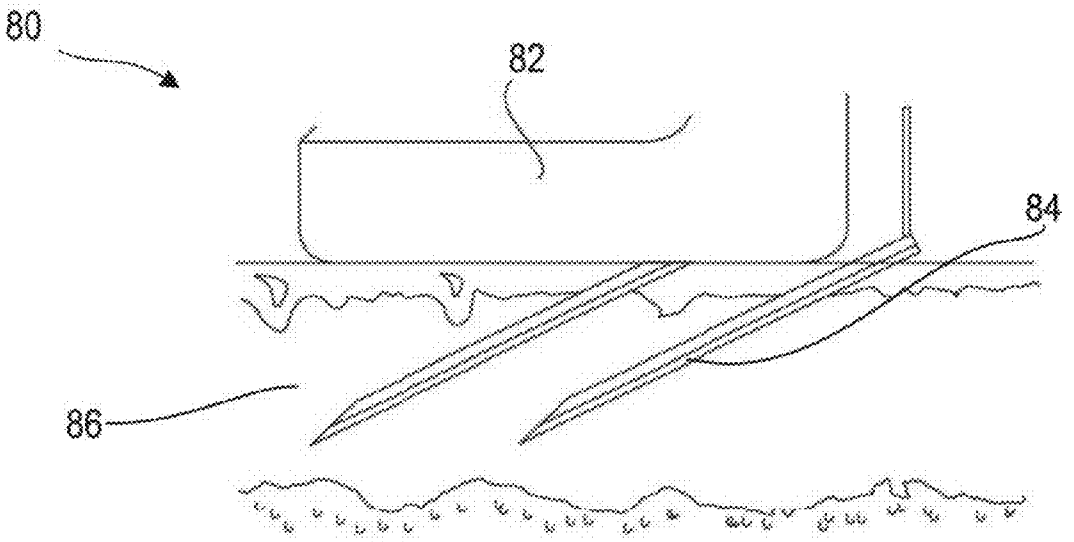

FIG. 10

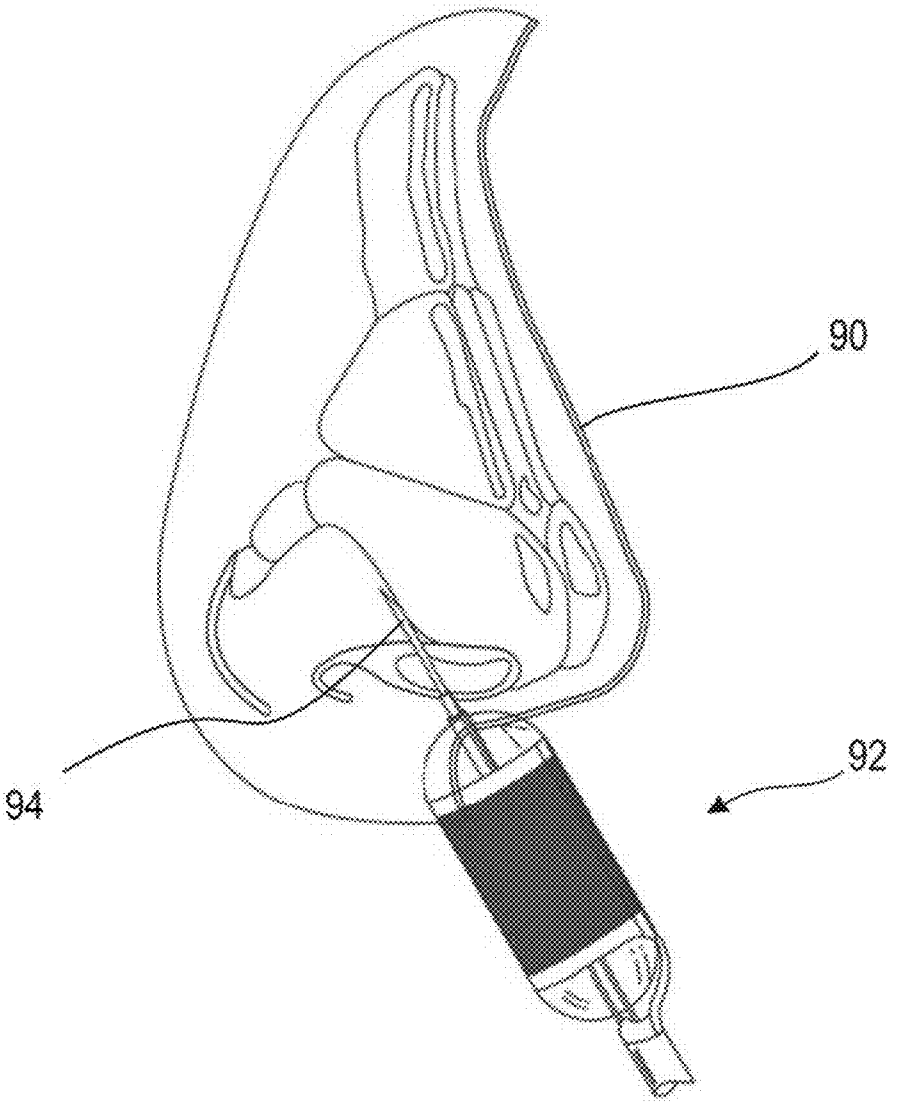

FIG. 11

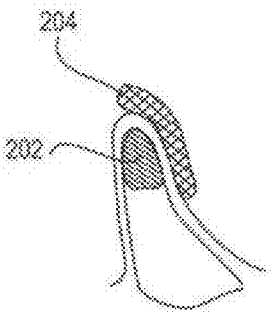

FIG. 12A

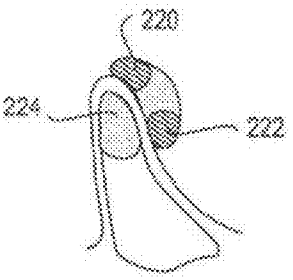

FIG. 12C

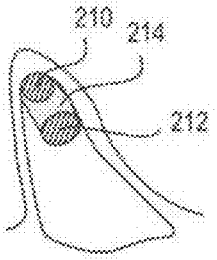

FIG. 12B

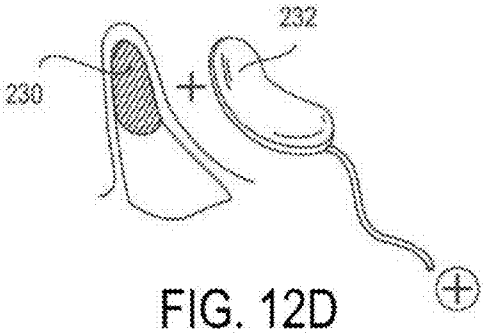

FIG. 12D

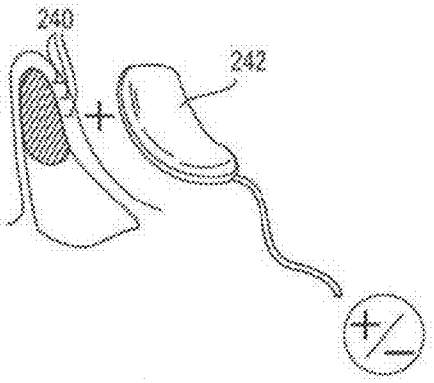

FIG. 12E

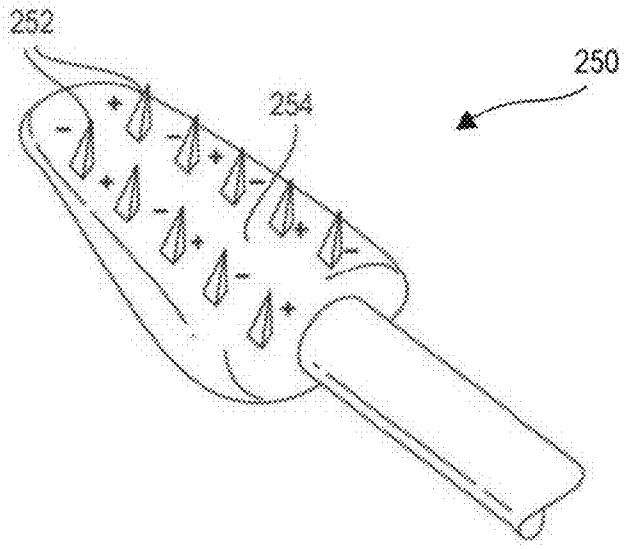

FIG. 13

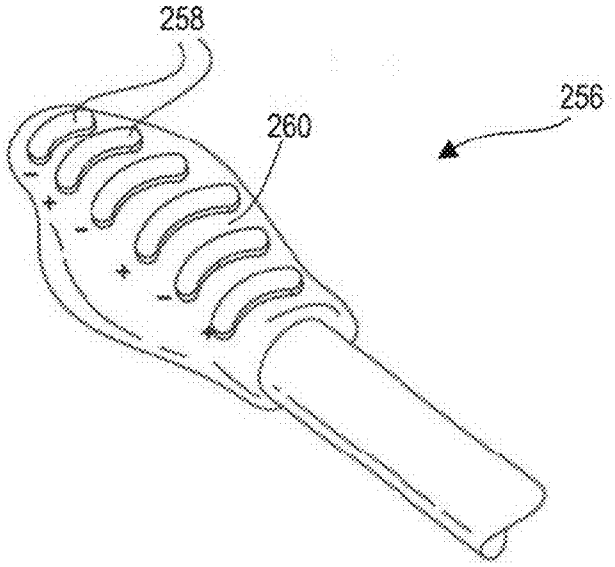

FIG. 14

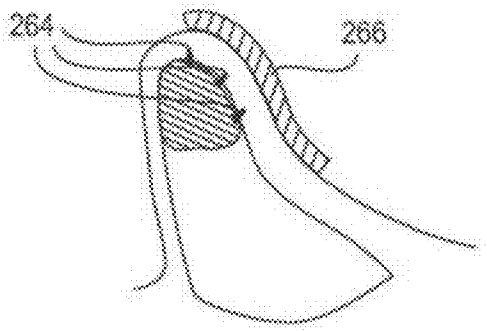

FIG. 15A

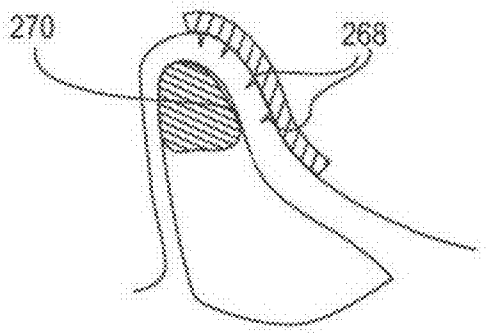

FIG. 15B

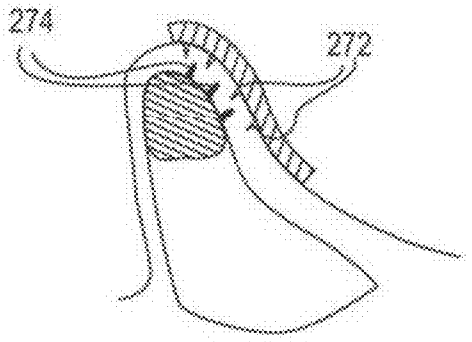

FIG. 15C

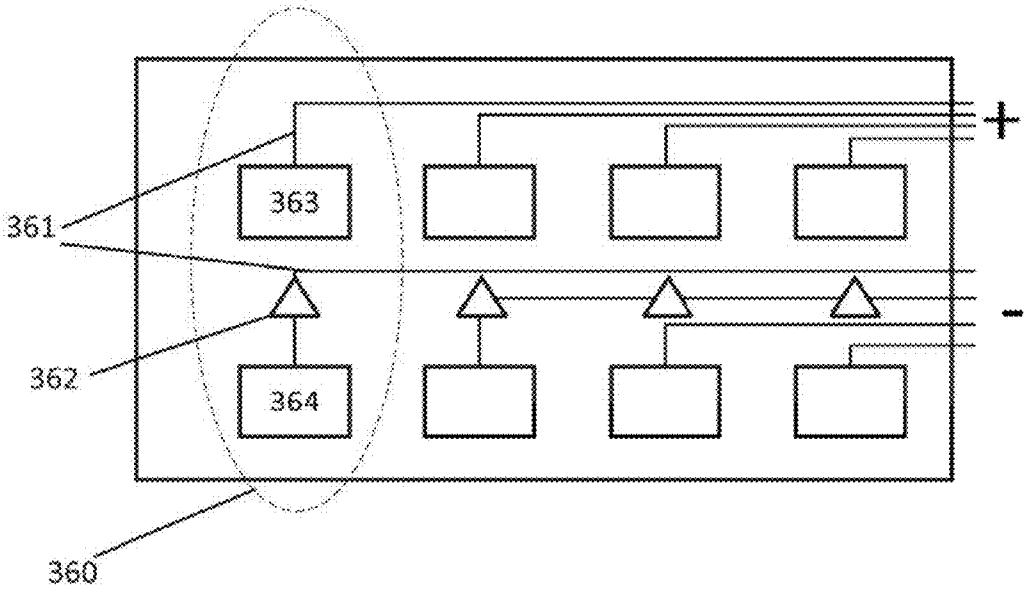

FIG. 16A

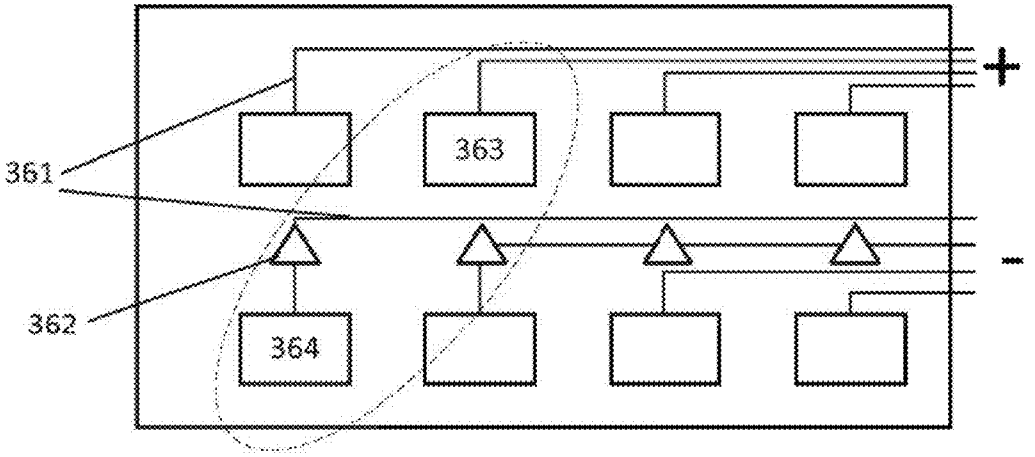

FIG. 16B

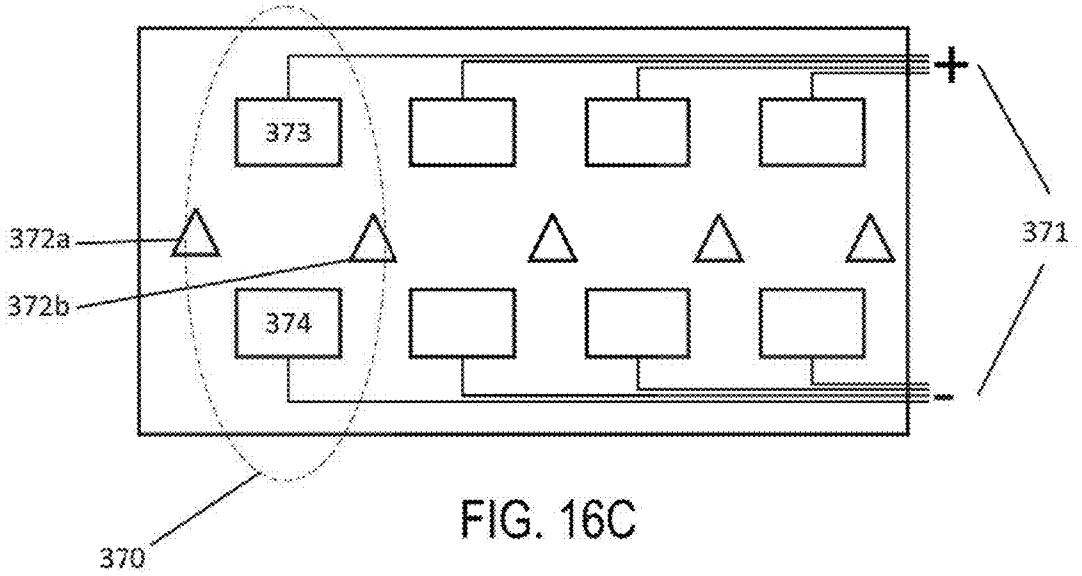

FIG. 16C

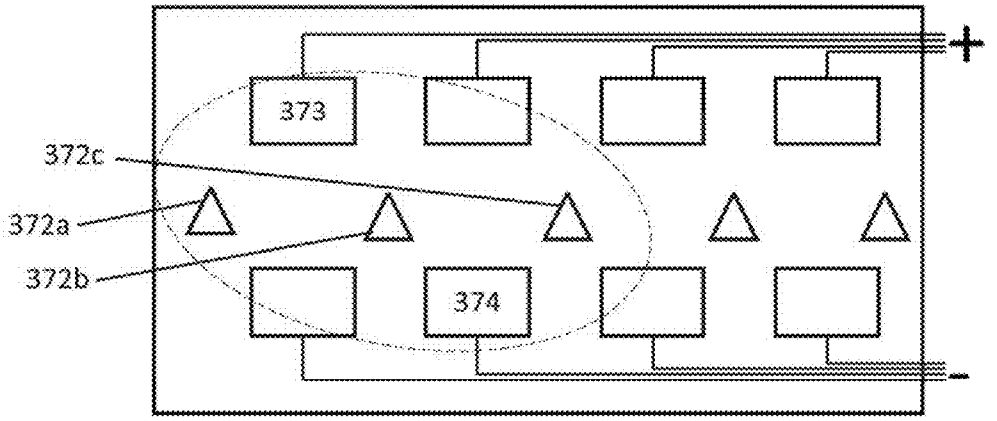

FIG. 16D

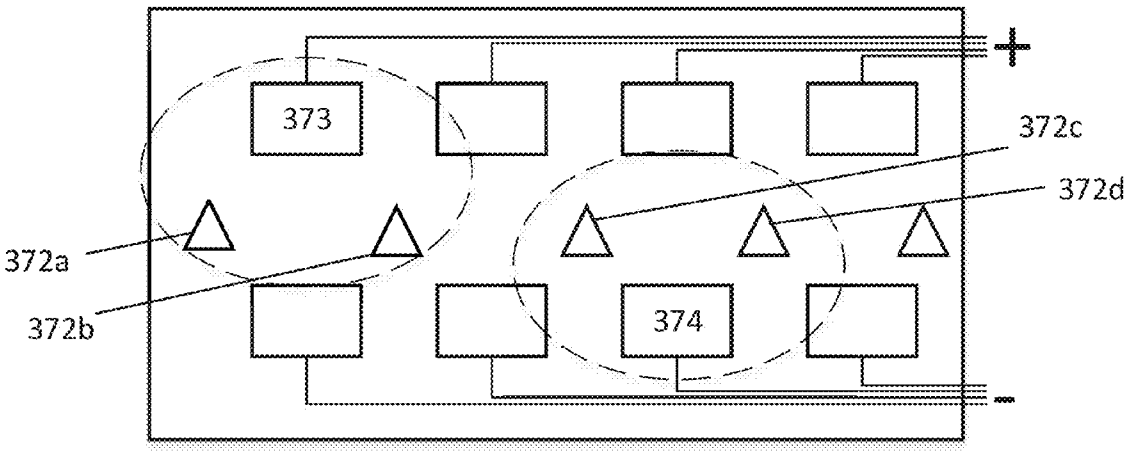

FIG. 16E

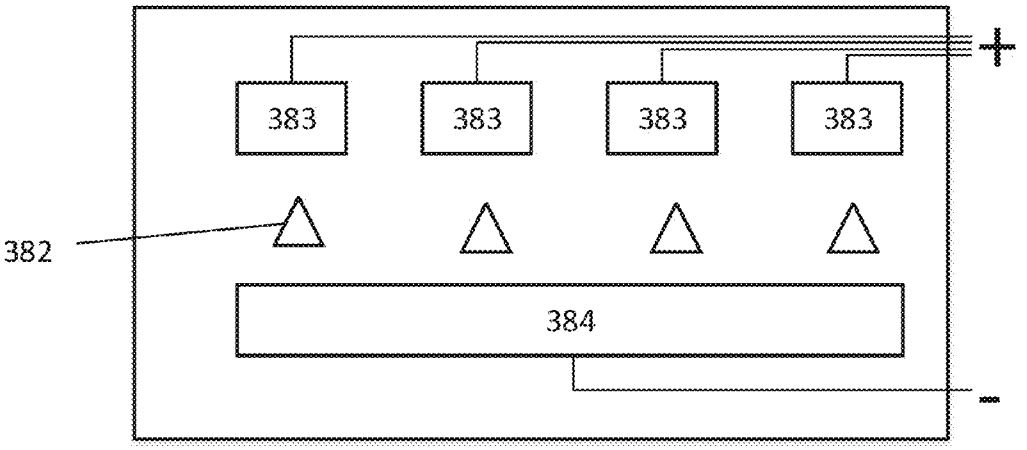

FIG. 16F

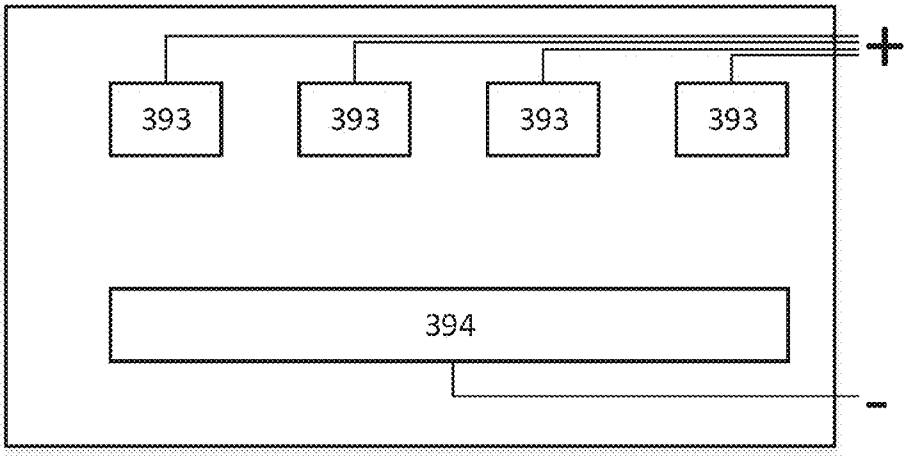

FIG. 16G

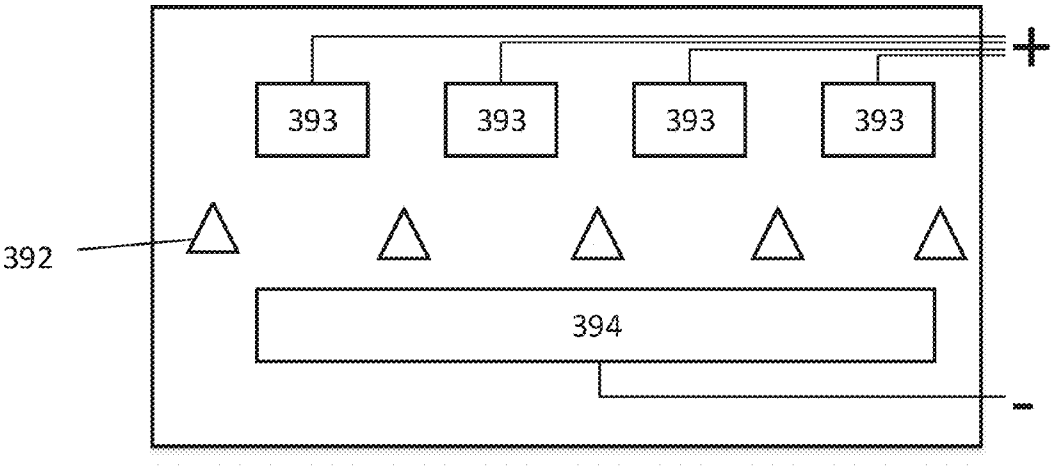

FIG. 16H

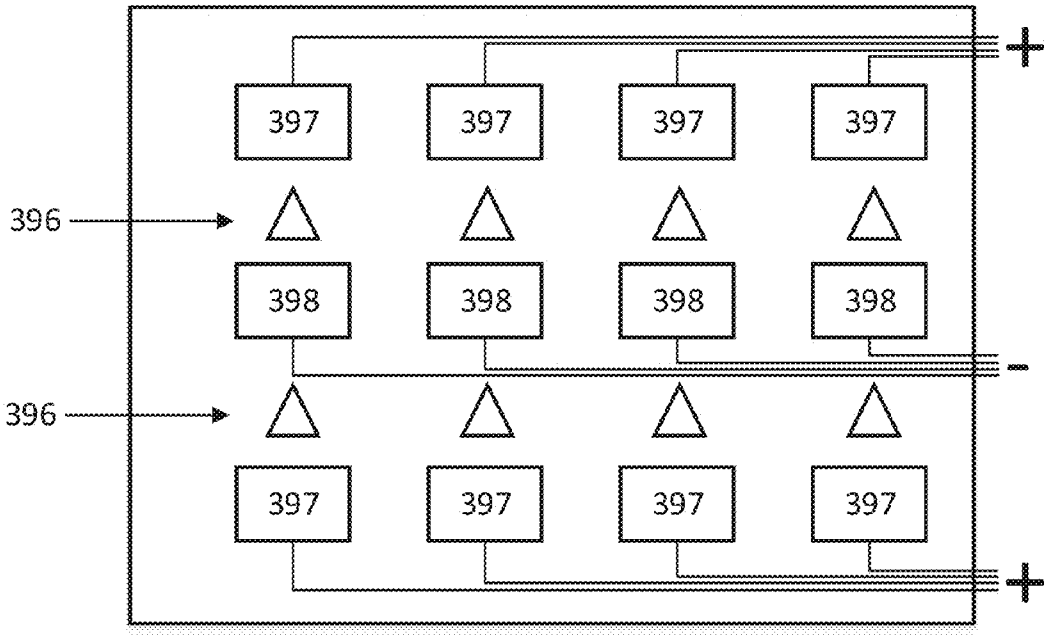

FIG. 16I

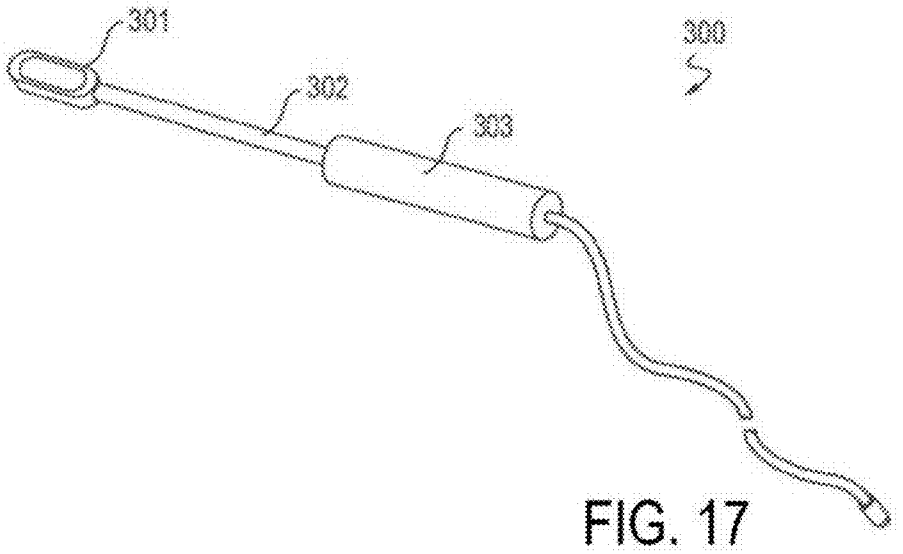

FIG. 17

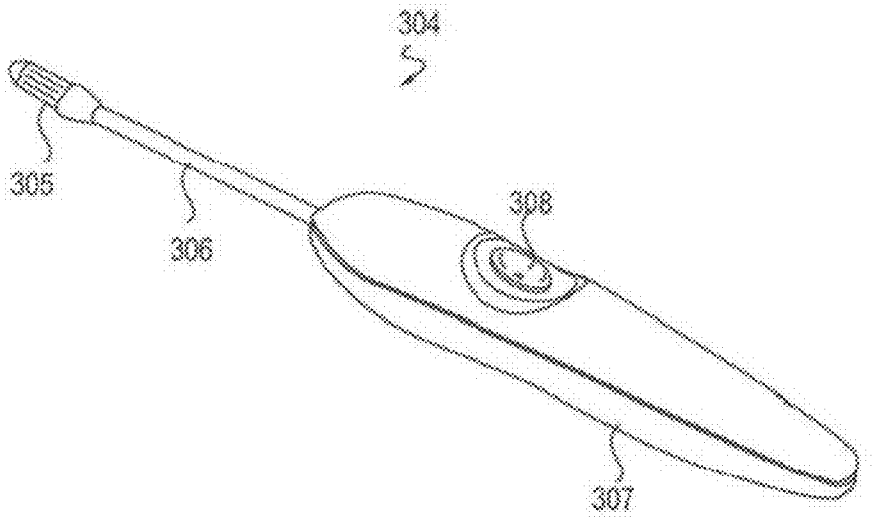

FIG. 18

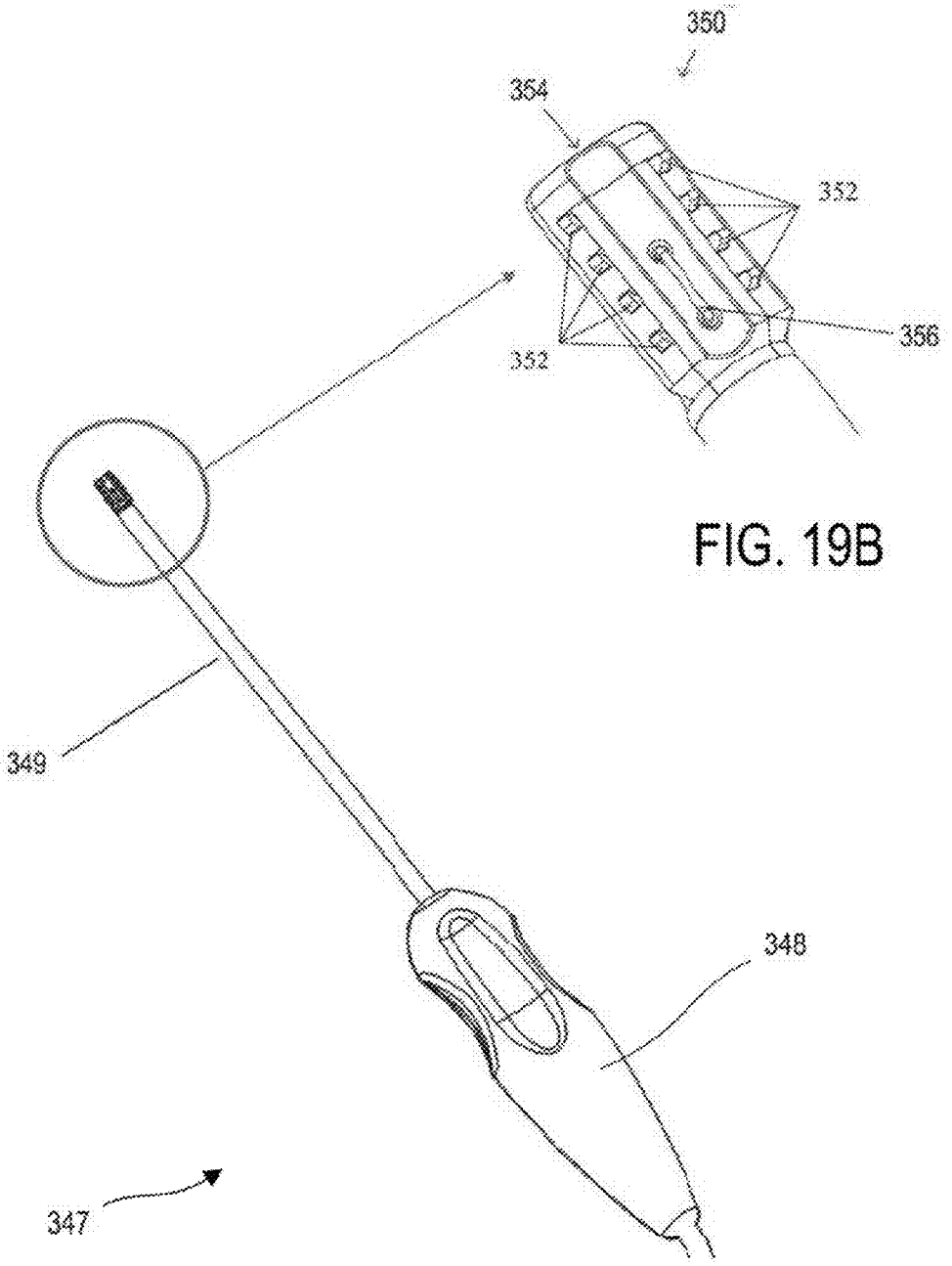

FIG. 19B

FIG. 19A

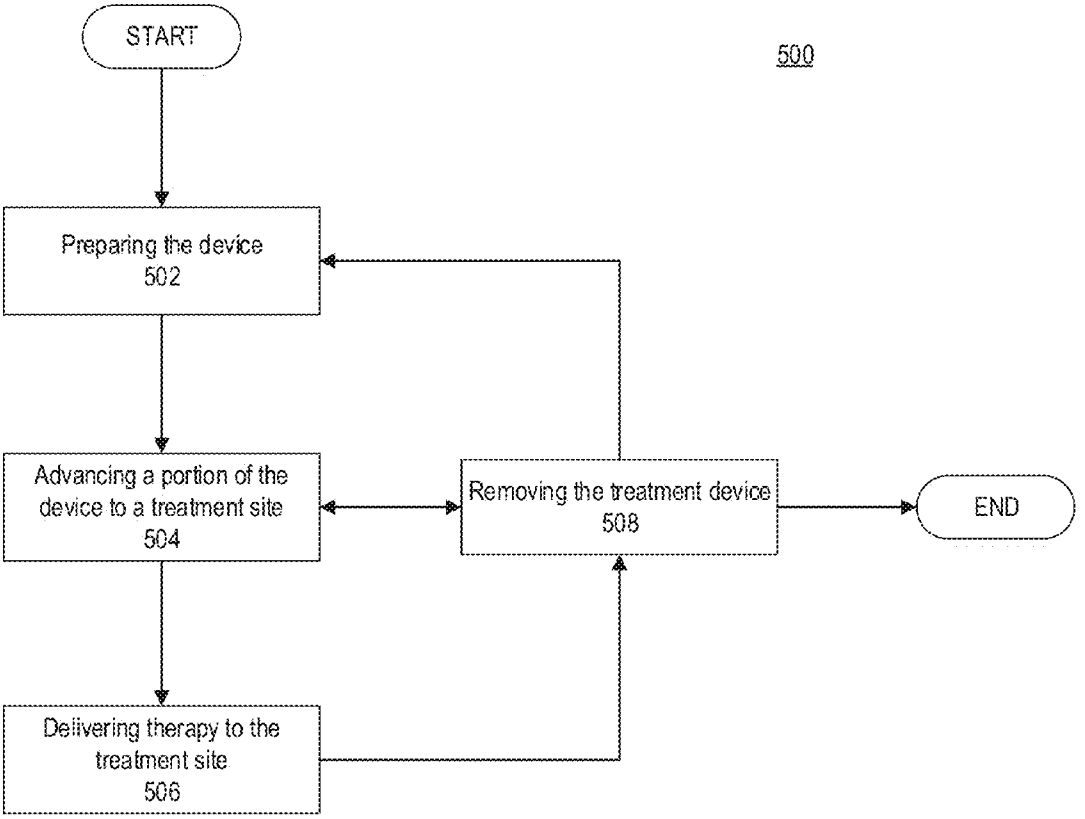
START
500
Preparing the device
502
Advancing a portion of the device to a treatment site
504
Removing the treatment device
508
END
Delivering therapy to the treatment site
506

FIG. 20

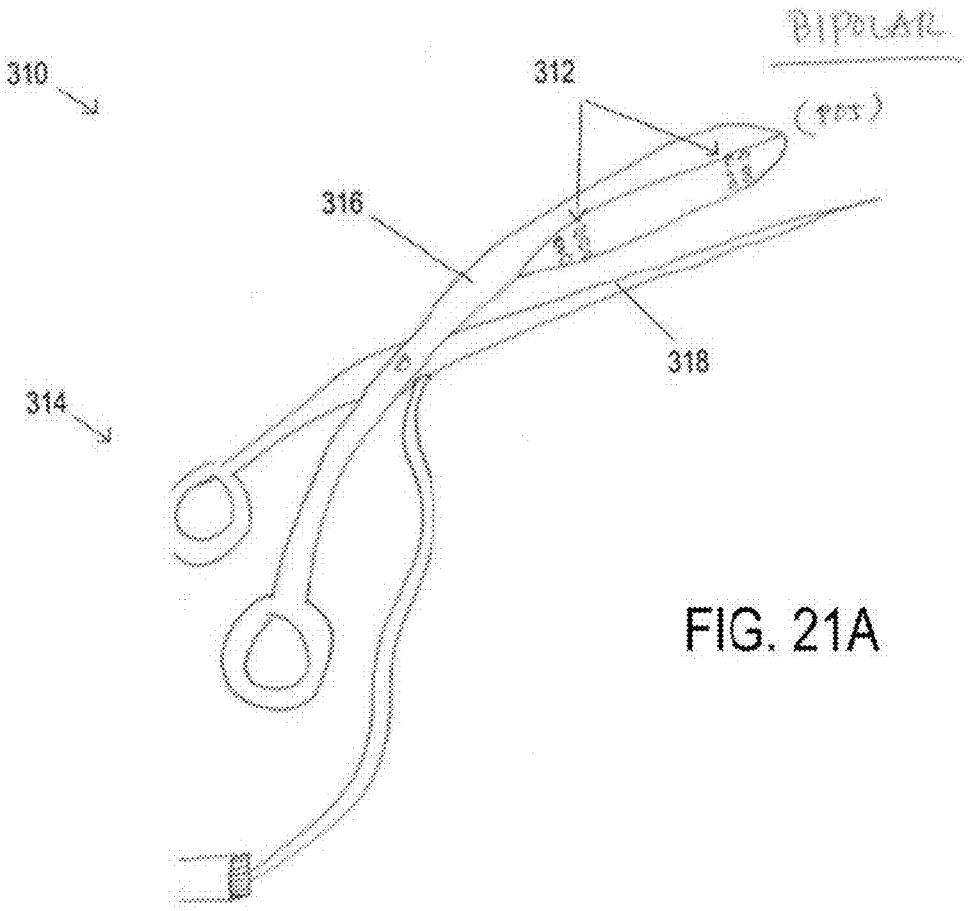

FIG. 21A

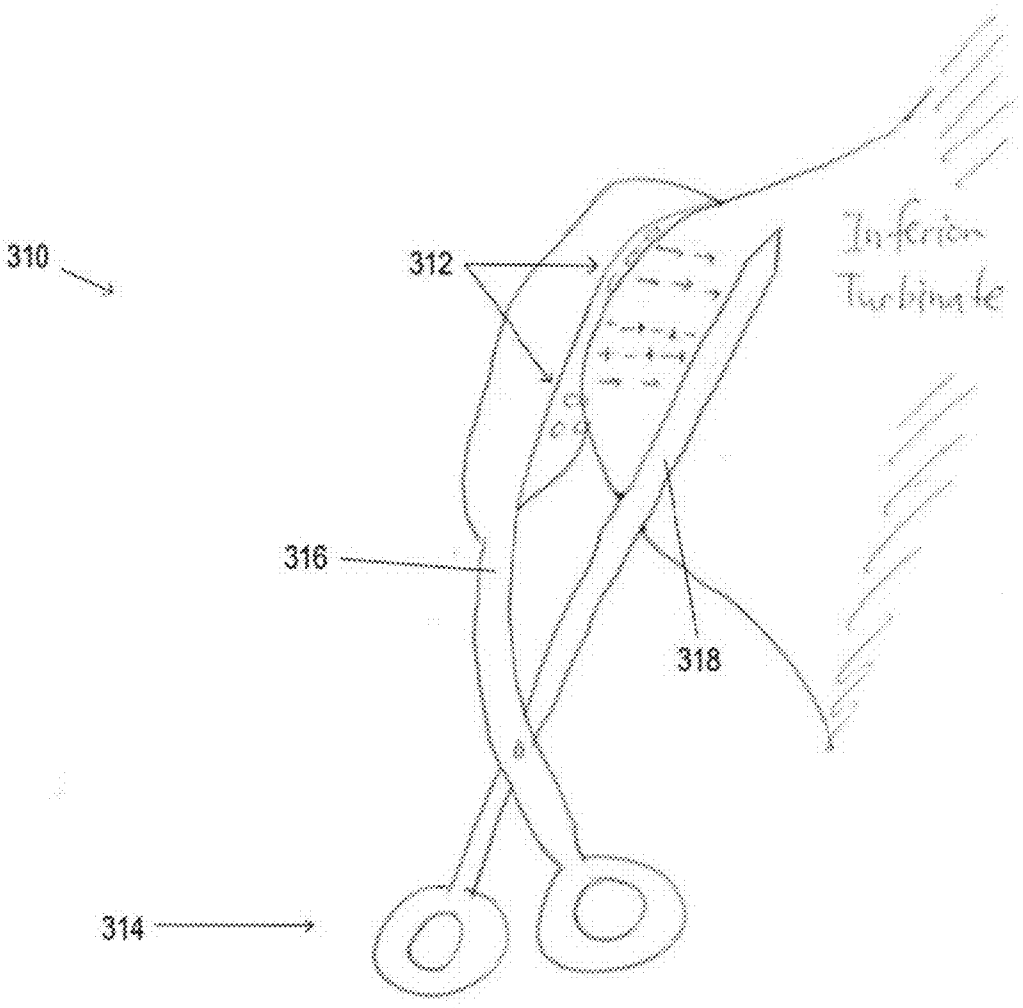

FIG. 21B

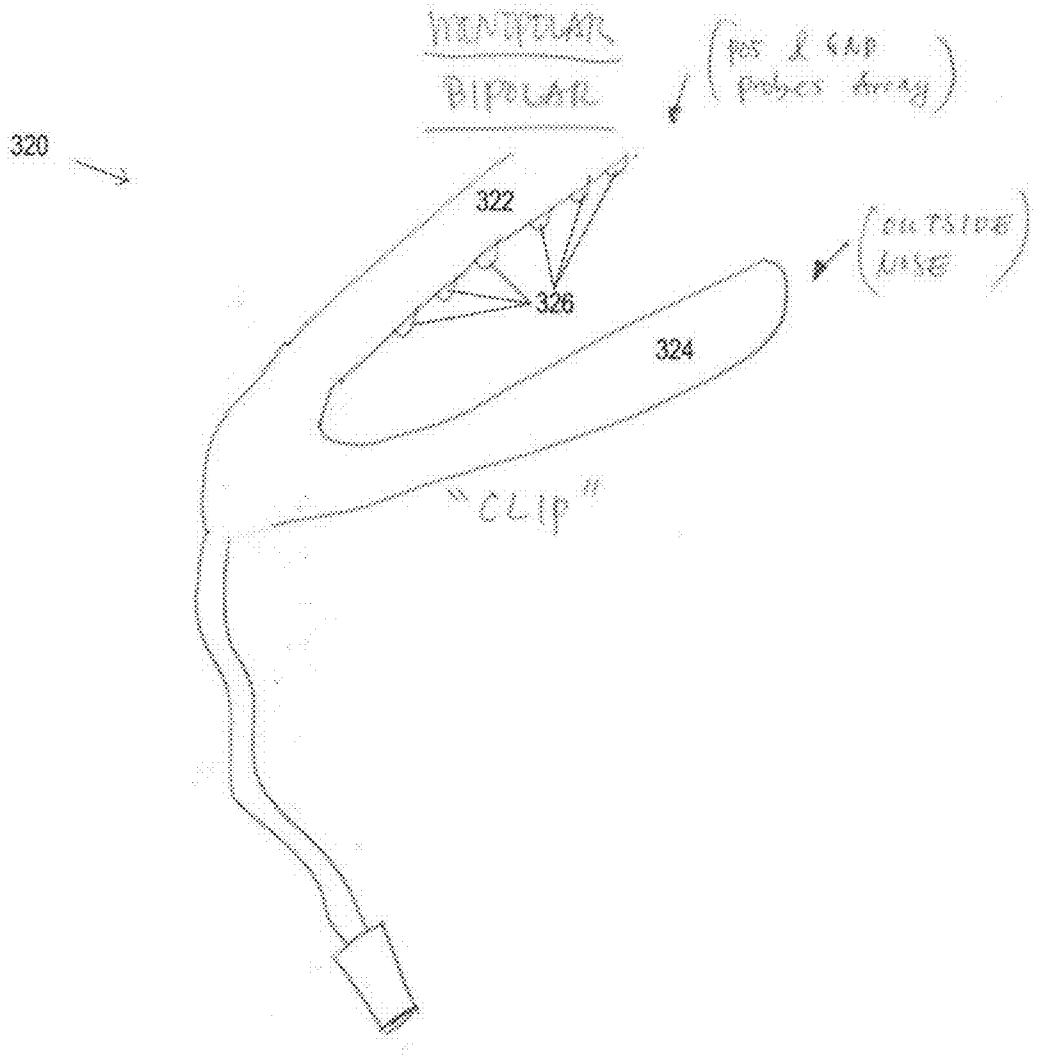

FIG. 22A

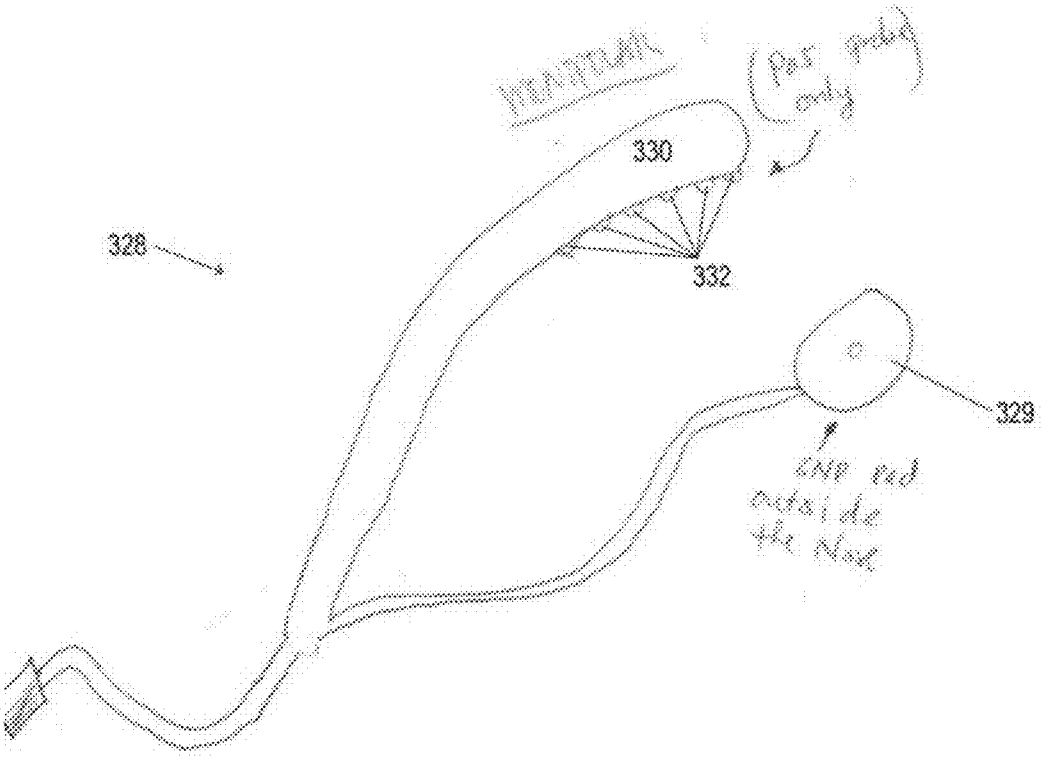

FIG. 22B

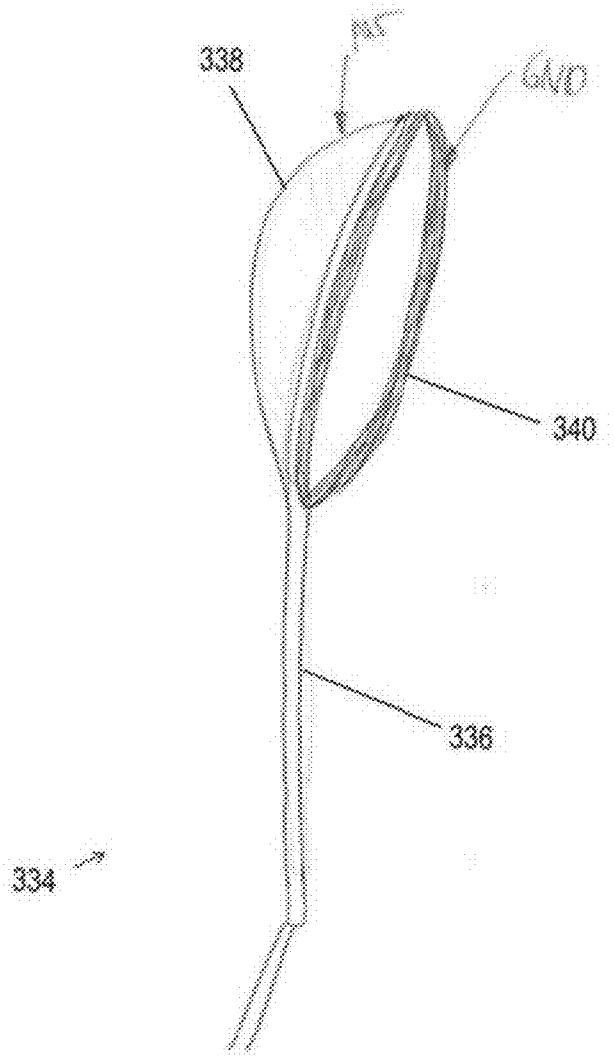

FIG. 23

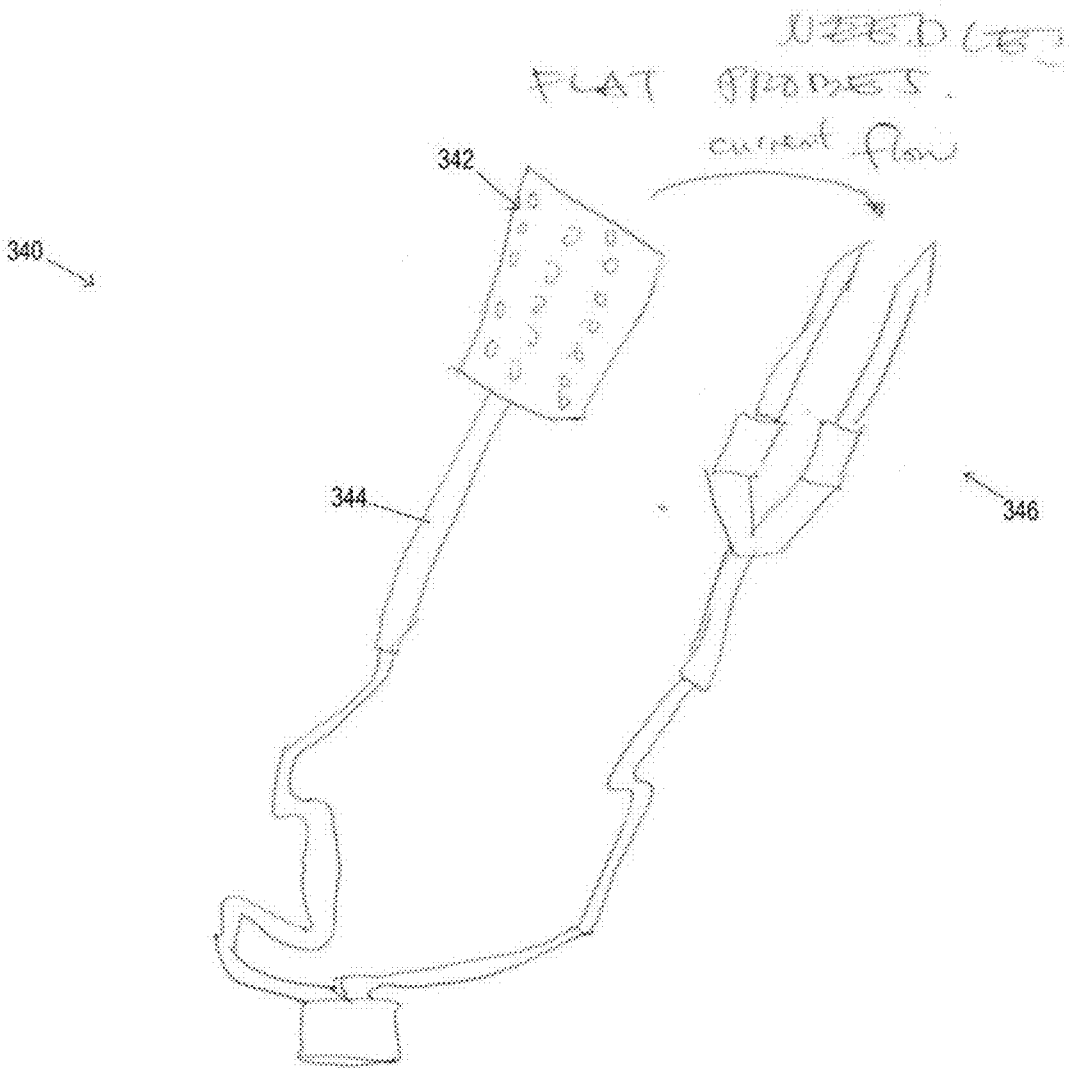

FIG. 24

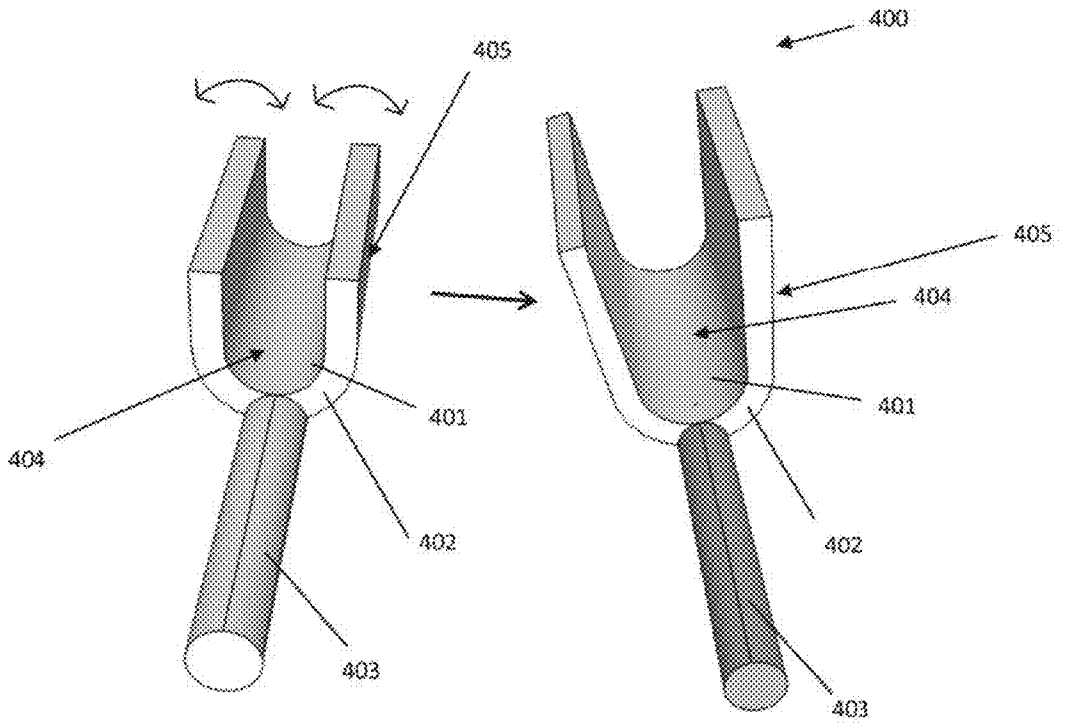

FIG. 25

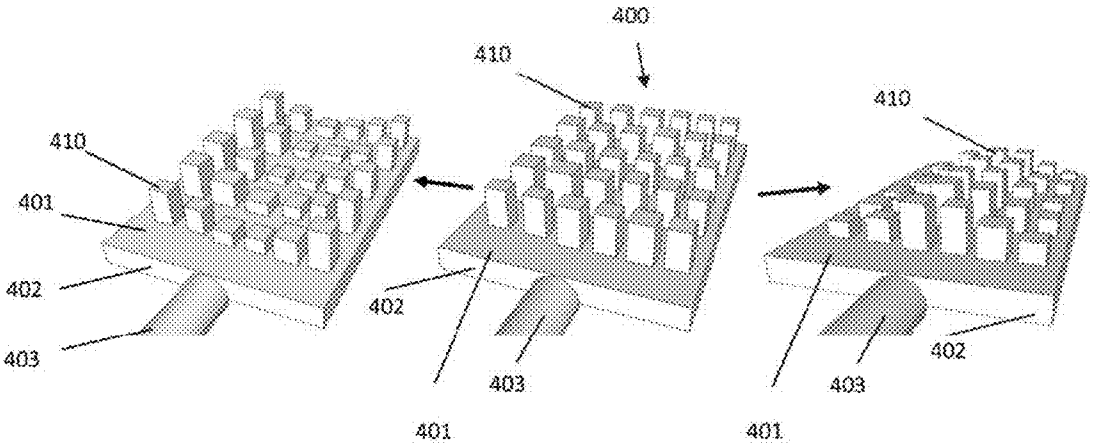

FIG. 26A FIG. 26B FIG. 26C

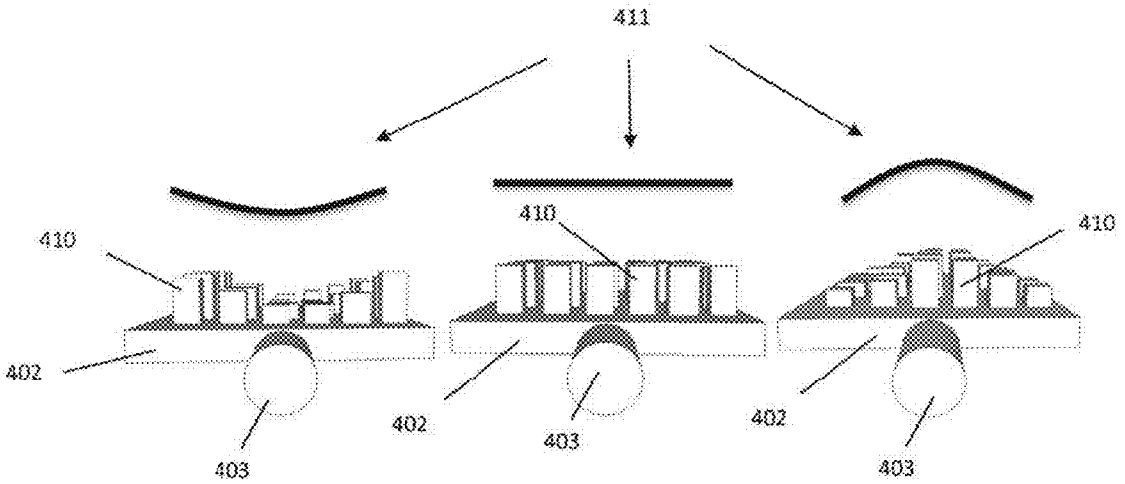

FIG. 26D FIG. 26E FIG. 26F

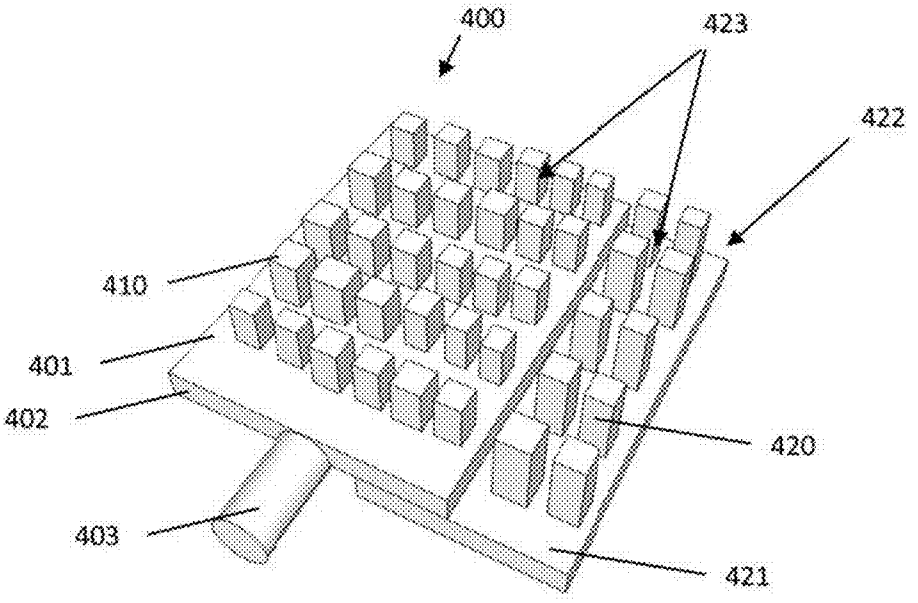

FIG. 27

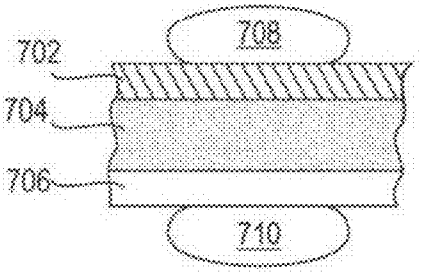

FIG. 28A

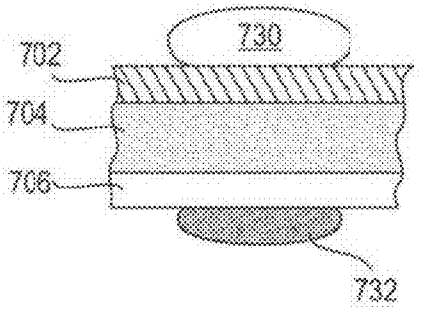

FIG. 28B

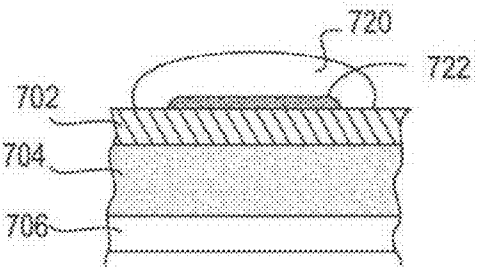

FIG. 28C

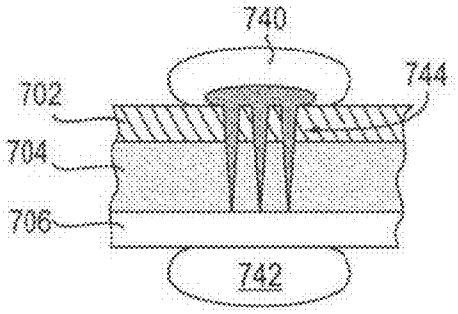

FIG. 28D

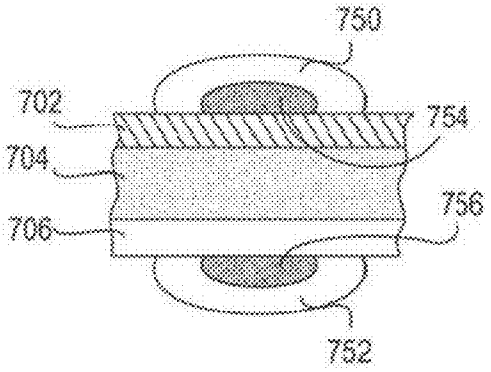

FIG. 28E

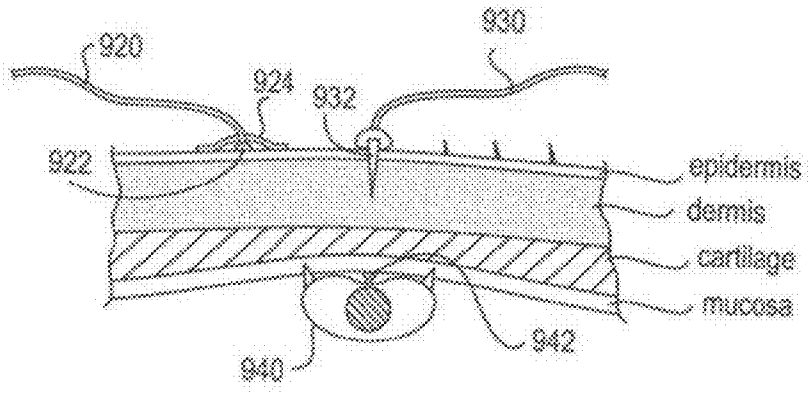

FIG. 29A

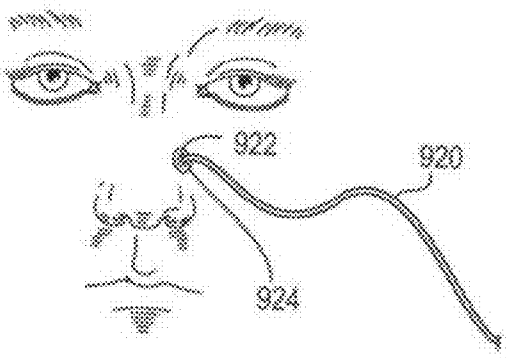

FIG. 29B

POST NASAL DRIP TREATMENT

RELATED APPLICATIONS

[0001] This application claims priority to U.S. Provisional Patent Application No. 61/974,534, entitled Post Nasal Drip Treatment, filed Apr. 3, 2014.

[0002] This application is also a continuation-in-part of pending U.S. patent application Ser. No. 14/319,087, entitled Methods and Devices to Treat Nasal Airways, filed Jun. 30, 2014, (U.S. Publication No. 2014/0316396), which is a continuation-in-part of U.S. application Ser. No. 13/495,844, which issued on Jan. 20, 2015, as U.S. Pat. No. 8,936,594; which claims priority to U.S. Provisional Patent Application No. 61/603,864, filed Feb. 27, 2012 and U.S. Provisional Patent Application No. 61/496,930, filed Jun. 14, 2011. The disclosures of all the above-referenced patent applications are hereby incorporated by reference in their entireties herein.

FIELD

[0003] This application relates generally to the field of medical devices and treatments. More specifically, the application relates to systems, devices and methods for treating structures within the upper airway to reduce and/or prevent overproduction and/or flow of mucus to alleviate the discomfort of post nasal drip symptoms.

BACKGROUND

[0004] In a healthy human body, glands in the lining of the nose, throat and airways produce about 1 to 1.5 liters daily of a thick, wet substance called mucus. The purpose of mucus is to help trap and destroy harmful bacteria and viruses in the airways before they can enter the body. Mucus produced in the nose is transported toward the throat and into the digestive system. This process is called mucociliary clearance and generally goes unnoticed, similar to breathing or blinking. However, viruses, infections, and the inhalation of airborne irritants, particles and micro-organisms can trigger an overproduction of mucus and/or thicker-than-usual mucus. This increased/thickened mucus causes irritation, which is known as post nasal drip syndrome (PNDS) or upper airway cough syndrome (UACS).

[0005] Nasal mucus is produced by the nasal mucosa and mucosal tissues lining airways (trachea, bronchus, bronchioles). Mucosal tissues include specialized airway epithelial cells (goblet cells) and submucosal glands. Goblet cells are situated in the epithelium of the conducting airways, often with their apical surfaces protruding into the lumen, a location which allows them to aid in a rapid response to inhaled airway insults. Goblet cells may have a much greater potential for mucus secretion than do the submucosal glands. Thus, goblet cells may represent the principal front-line defender of the airway.

[0006] New information demonstrates that goblet cells can discharge vast quantities of mucus in fractions of a second, a property integral to airway defense against acute insult. Goblet cells can also increase in number in response to continued airway insult. The increase in goblet cells, and hence mucus production, may be a result of hyperplasia (involving cell division) and/or metaplasia (involving cell differentiation). Preventing metaplasia may be achieved by eliminating goblet cell metaplasia inducing components, such as Interleukin (IL)-13. This gene encodes an immunoregulatory cytokine produced primarily by activated Th2 cells. This cytokine is involved in several stages of B-cell maturation and differentiation.

[0007] While the overproduction of nasal mucus can be a result of anatomical causes like deviated nasal septum and turbinate hypertrophy, non-anatomical causes, such as allergies, have also been known to trigger PNDS. These patients may have overactive immune systems, leading to an overproduction of mucus. The most straightforward method of treating the allergy problem is to take a test to diagnose the causes of allergies and making lifestyle changes to stay away from these causes. Medications like antihistamines are often prescribed to block allergy mediators. However, antihistamines may thicken mucus secretions and can worsen bacterial rhinitis or sinusitis. A specific antihistamine may lose its effectiveness over time, requiring more or alternative antihistamines to reduce systemic reaction. In addition, antihistamines may come with side effects such as headache, dry mouth, and dry nose.

[0008] Nasal-spray corticosteroids (commonly called steroids) are considered the most effective drugs for controlling the symptoms of moderate-to-severe allergic rhinitis. However, side effects may include dryness, burning, stinging in the nasal passage, sneezing, headaches and nosebleed. There may also be long term complications caused by hormone suppression, such as lower resistance to infection, effects on growth in children, nervousness, acne, etc. Cromolyn and leukotriene antagonists may have lesser side effects, but are not as effective as nasal corticosteroids. The major hazard with nasal-delivery decongestants, particularly long-acting forms, is a cycle of dependency and rebound effects. For oral decongestants, side effects such as insomnia, irritability, nervousness, and heart palpitations may be observed.

[0009] Immunotherapy (commonly referred to as "allergy shots") is a safe and effective treatment for patients with allergies. The major downside to immunotherapy is that it requires a prolonged course of weekly injections. This makes the treatment process laborious and patients often fail to comply with the regimens, limiting the end results of the therapy.

[0010] Therefore, a need exists for a long lasting, single-treatment or low frequency treatment for PNDS caused by allergies, anatomical causes or other causes. Ideally, such a treatment would alleviate PNDS symptoms, without producing severe and/or chronic side effects.

BRIEF SUMMARY

[0011] Certain implementations of the systems and methods disclosed herein address the above mentioned needs by delivering a therapy in an upper airway to treat PNDS and/or UACS. The therapy delivered may involve delivering energy to, removing energy from (e.g., cryotherapy) and/or delivering a substance to mucosal tissue and/or a tissue underlying mucosal tissue in the upper airway. The therapy delivery may have any of a number of different effects on the treated tissue. For example, the therapy may decrease the absolute number and/or the mucus producing ability of mucus producing cells and/or mucus glands, such as by inactivating, retarding and/or replacing the cells. In other embodiments, the therapy may ablate or otherwise deactivate nerve tissue underlying mucosal tissue and thus ameliorate PNDS and/or UACS symptoms. In various embodiments, treatment may be applied during early stages of PNDS and/or UACS symptoms, before hyperplasia and metaplasia occur. Such early

stage intervention may involve inactivating or modifying goblet cells and/or any other mucus producing cells and/or glands via the application of energy.

[0012] Embodiments of the present application are directed to devices, systems and methods for treating upper airways. Such embodiments may be used to treat PNDS by reducing the production of mucus in the upper airways, thus preventing the mucus from causing PNDS. For example, the devices, systems and methods described herein may be used to change the properties of the tissue of the nose and throat, including but not limited to skin, muscle, mucosa, submucosa and nasal turbinate.

[0013] According to one embodiment, a device for treating PNDS includes an elongate shaft having a proximal end and a distal end. In one embodiment, the device includes an treatment portion, such as an energy delivery member, sized to be inserted into a nose and/or throat or delivered external to a nose and/or throat. The energy delivery member is configured to deliver energy to tissues within the nose and/or throat and change the properties of a region of the nose and/or throat to minimize mucus production and prevent mucus from causing PNDS. The device may further include a handle at the proximal end of the elongate shaft. The devices described herein may be configured to be positioned internally or externally within the nose, throat and/or mouth. Certain embodiments are configured to be delivered into one or both nostrils, and other embodiments are configured to be delivered into the throat.

[0014] Other embodiments of the devices for treating a patient's PNDS include devices that apply other types of treatment. For example, a treatment device may apply energy of form selected from a group consisting of ultrasound, microwave, heat, radiofrequency, electrical, light, cryogenic and laser. The treatment device may also be configured to inject a polymerizing liquid or to deliver cauterizing agent to the upper airway. Other embodiments are described below.

[0015] In some embodiments, the device may comprise a treatment element having a shaped surface conformed to the region of the nose or throat to be treated. For embodiments using an energy delivery element, the treatment element may be a separate element from the energy delivery element, or the energy delivery element and the treatment element may be part of the same element. The energy delivery element and/or treatment element in one embodiment may have a concave surface to cover the treatment region as much as possible.

[0016] In embodiments using energy delivery, a handle may be provided comprising a button or other input control to activate one or more electrodes. Electrodes may comprise one or more monopolar needles, one or more monopolar plates, or one or more bipolar electrode pairs (which may also comprise one or more needles or plates). These electrodes may be located in various locations, for example, inside the nasal passageway, inside the throat or external to both nose and throat. For example, when using a bipolar electrode pairs, a first electrode surface may be positioned internal to the nose and a second electrode surface may be positioned external to the nose, so that the two electrode surface are positioned on opposite sides of the nasal tissue. In certain implementations, electrodes may be surface acting, transdermal or subdermal (e.g., by access via an incision) or a combination thereof.

[0017] The device of one energy delivery embodiment may comprise an adaptor configured to be connected to an energy source, such as a RF energy source. The device may also comprise a control system configured to control the characteristics of the energy applied to the tissue.

[0018] A thermocouple or other sensor may be provided to measure a temperature near the tissue or other tissue or device parameter. Sensor(s) to monitor tissue properties such as impedance, resistance, moisture level may also be provided.

[0019] In another aspect, a system is provided comprising a device as described above and further below in combination with one or more other components. One such component may be a control system for controlling the energy source and/or treatment device. In another embodiment, the system may comprise a cooling mechanism to cool desired tissue locations while treatment is being applied. In monopolar electrode embodiments, a grounding pad may also be provided as part of the system. Another system includes a positioning and/or other parameters for using the device to treat the feeling and effects of PNDS.

[0020] According to another aspect, a method of treating a patient's PNDS is provided. In one embodiment, the method includes altering the tissue properties of the nasal inferior turbinate by applying a treatment sufficient to alter the tissue properties to reduce mucus production.

[0021] According to one embodiment, a method of treating a patient's PNDS comprises positioning a treatment element within the upper airway tissue to be treated. The treatment element comprises one or more electrodes, such as described above in further detail below.

[0022] In certain implementations, the method may further comprise altering the properties of the nasal or throat tissue by pressing a surface of the treatment element against the upper airway tissue to be treated. In certain implementations, the method may further comprise delivering radiofrequency (RF) energy to the one or more electrodes to locally heat the tissue to be treated, wherein delivering RF energy while altering the properties of the tissue causes less mucus production in the treatment area. The method may also comprise removing the treatment element from the upper airway.

[0023] In one aspect, a method for reducing mucus secretion in an upper airway of a patient to treat post nasal drip and/or chronic cough may involve: advancing a treatment delivery portion of an energy-based treatment device into a nostril of the patient; contacting mucosal tissue of the upper airway with the treatment delivery portion, without piercing the mucosal tissue; and delivering a treatment from the treatment delivery portion to the mucosal tissue and/or another tissue underlying the mucosal tissue to modify a property the tissue and thus treat at least one of post nasal drip or chronic cough in the patient.

[0024] In some embodiments, the treatment may be delivered without forming an incision in the mucosal tissue and without delivering an implant. In some embodiments, delivering the treatment involves delivering energy from the delivery treatment portion in the form of ultrasound, microwave, heat, radiofrequency, electrical, light or laser energy.

[0025] In some embodiments, delivering the treatment comprises delivering radiofrequency energy from a first electrode on a tissue contact surface of the treatment portion across a convex portion of the tissue contact surface to a second electrode on the tissue contact surface. In some embodiments, contacting the mucosal tissue comprises contacting multiple non-piercing bumps on the tissue contact surface with the mucosal tissue. In some embodiments, the at least one tissue comprises nerve tissue underlying the mucosal tissue, and delivering the energy comprises ablating

the nerve tissue. Some embodiments may further comprise measuring an amount of delivered energy using a thermocouple on the treatment portion. Some embodiments may further comprise adjusting the amount of delivered energy by adjusting a setting of the treatment delivery portion.

[0026] In some embodiments, delivering the treatment comprises removing energy, and the treatment delivery portion comprises a cryotherapy device. In some embodiments, the at least one tissue comprises nerve tissue underlying the mucosal tissue, and removing energy comprises ablating the nerve tissue using the cryotherapy device. In some embodiments, applying a treatment comprises injecting a polymerizing liquid.

[0027] In some embodiments, delivering the treatment comprises injuring the at least one tissue. In some embodiments, delivering the treatment comprises injuring goblet cells that are part of the mucosal tissue. In some embodiments, the at least one tissues is selected from the group consisting of cilia, goblet cells, nerves, submucosal tissue, muscle, ligaments, cartilage, tendon, and skin. In some embodiments, delivering the treatment comprises simultaneously mechanically altering the mucosal tissue and delivering energy to the at least one tissue. In some embodiments, delivering the treatment comprises modifying the at least one tissue in a manner that decreases a volumetric rate of mucus production of the mucosal tissue without changing a shape of the mucosal tissue. In some embodiments, delivering the treatment comprises delivering a cauterizing agent to tissue to be treated. In some embodiments, delivering the treatment comprises delivering the treatment to at least one turbinate of the upper airway. In some embodiments, the at least one turbinate comprises an inferior turbinate, and contacting the mucosal tissue comprises contacting a posterior aspect of the inferior turbinate.

[0028] In another aspect, a device for reducing mucus secretion in an upper airway of a patient to treat post nasal drip and/or chronic cough may include: an elongate, malleable shaft having a proximal end and a distal end; a handle at the proximal end of the elongate shaft; and a treatment portion at the distal end of the elongate shaft. The treatment portion may include a treatment surface, which may include at least two energy delivery members extending longitudinally along the treatment surface and a concave trough extending longitudinally along the treatment surface and separating the at least two energy delivery members.

[0029] In some embodiments, the at least two energy delivery members comprise at least one positive electrode on one side of the concave trough and at least one negative electrode on an opposite side of the concave trough. In some embodiments, the at least one positive electrode comprises a row of positive electrodes, and the at least on negative electrode comprises a row of negative electrodes. In some embodiments, the electrodes (which may be blunt-tipped electrodes) protrude from the treatment surface. Some embodiments further comprise a thermocouple disposed within the concave trough.

[0030] In another aspect, a method for reducing mucus secretion in an upper airway of a patient to treat at least one of post nasal drip or chronic cough may involve: bending a malleable shaft of a treatment device into a desired configuration; advancing a treatment portion of the treatment device into a nostril of the patient to contact a treatment surface of the treatment portion with mucosal tissue of the upper airway, without piercing the mucosal tissue; and delivering radiofrequency energy from a first electrode on the treatment surface across a concave trough in the treatment surface to a second electrode on the treatment surface, to treat mucosal tissue and/or another tissue underlying the mucosal tissue to modify a property of the tissue and thus treat post nasal drip and/or chronic cough in the patient. The method also involves measuring an amount of the radiofrequency energy delivered, using a thermocouple disposed in the concave trough, and removing the treatment portion from the upper airway without leaving an implant in the upper airway.

[0031] Some embodiments further comprise performing a test to determine whether a desired contact between the treatment surface and the mucosal tissue has been achieved. In some embodiments, delivering and measuring steps comprise delivering a first amount of the radiofrequency energy from the first electrode to the second electrode; measuring a temperature of the mucosal tissue using the thermocouple; and delivering a second amount of the radiofrequency energy from the first electrode to the second electrode, wherein the second amount of radiofrequency energy is based at least in part on the measured temperature.

[0032] In some embodiments, the mucosal tissue comprises tissue located on at least one nasal turbinate of the upper airway. In some embodiments, the mucosal tissue comprises tissue located on a posterior aspect of an inferior turbinate. In some embodiments, delivering the radiofrequency energy comprises delivering the radiofrequency energy in an amount that deactivates mucus producing cells by impairing at least one of mucus production ability or cell differentiation ability of the mucus producing cells. In some embodiments, delivering the radiofrequency energy comprises delivering the radiofrequency energy in an amount that causes one or more mucus paths of the upper airway to divert. Some embodiments comprise repeating the bending, advancing, and delivery steps.

[0033] These and other aspects and embodiments will be described in further detail below, in reference to the attached drawing figures.

BRIEF DESCRIPTION OF DRAWINGS

[0034] FIG. **1** is a side-view diagram of a mucus producing cell in the lining of a nasal epithelium.

[0035] FIG. **2** is a diagram of a process of exocytosis.

[0036] FIG. **3** is a diagram of a Ca2+ filled vesicle fusing with a membrane and opening up to an extracellular space containing Na+ and Cl−.

[0037] FIGS. **4A-4C** are diagrams of a membrane-vesicle fusion process.

[0038] FIG. **5** is a side-view diagram of respiratory epithelium, illustrating a process of squamous metaplasia of columnar cells to squamous cells.

[0039] FIG. **6** is a top-view illustration of a mucus reduction treatment device, according to one embodiment.

[0040] FIG. **7** is a perspective view of a treatment portion shape for a treatment portion of a mucus reduction treatment device, according to one embodiment.

[0041] FIG. **8** is a perspective view of a treatment portion of a mucus reduction treatment device, according to an alternative embodiment.

[0042] FIG. **9** is a perspective view of a treatment portion of a mucus reduction treatment device, according to another alternative embodiment.

[0043] FIG. **10** is a cross-sectional view of a distal end of a treatment portion of a treatment device, showing micron-

eedles puncturing tissue in order to apply treatment at a desired tissue depth, according to one embodiment.

[0044] FIG. **11** is a perspective view of an energy delivery balloon being inserted into a nose, according to one embodiment.

[0045] FIGS. **12**A-**12**E are cross-sectional views of various electrode arrangements for applying energy to the treatment tissue in the nose or throat according to various embodiments.

[0046] FIG. **13** is a perspective view of an electrode arrangement of a treatment element according to one embodiment.

[0047] FIG. **14** is a perspective view of an electrode arrangement of a treatment element according to one embodiment.

[0048] FIGS. **15**A-**15**C are cross-sectional views of various electrode arrangements for applying energy to the treatment tissue in the nose or throat according to various embodiments.

[0049] FIGS. **16**A-**16**I are cross-sectional views of various permutations of electrodes-thermocouples combinations for a multi-channel configuration according to various embodiments.

[0050] FIG. **17** is a perspective view of a device for applying energy to upper airway tissues using monopolar electrodes according to one embodiment.

[0051] FIG. **18** is a perspective view of a device for applying energy to upper airway tissues using monopolar electrodes according to one embodiment.

[0052] FIG. **19**A is a perspective view of a device for applying energy to the upper airway tissues using a bipolar electrode according to one embodiment.

[0053] FIG. **19**B is an enlarged perspective view of the treatment member of the device of FIG. **19**A.

[0054] FIG. **20** is a flow diagram of an example method of use of various devices.

[0055] FIGS. **21**A-**21**B are perspective views of a device for applying energy to the upper airway tissues using a bipolar electrode and a positioning element according to one embodiment.

[0056] FIG. **22**A is a perspective view of a clamp-like device for applying energy to the upper airway tissues using a bipolar electrode according to one embodiment.

[0057] FIG. **22**B is a perspective view of a one-prong device for applying energy to the upper airway tissues using a monopolar electrode according to one embodiment.

[0058] FIG. **23** is a perspective view of a device with concave head, for applying energy to the upper airway tissues using a bipolar electrode according to one embodiment.

[0059] FIG. **24** is a perspective view of a device with grounding probes, for applying energy to the upper airway tissues using a monopolar electrode according to one embodiment.

[0060] FIG. **25** is a perspective view of a treatment element with flexible wings according to one embodiment.

[0061] FIGS. **26**A-**26**F are perspective views of a treatment element with electrodes of adjustable heights according to certain embodiments.

[0062] FIG. **27** is a perspective view of a treatment ent with an extendable component according to one embodiment.

[0063] FIGS. **28**A-**28**E are side-cutaway views of treatment elements according to certain embodiments.

[0064] FIG. **29**A is a side-cutaway view of nasal skin in cross section, including mucosa, cartilage, dermis and epidermis and a treatment device having an external component according to one embodiment.

[0065] FIG. **29**B is a perspective view of a treatment of an applied external component according to one embodiment.

DETAILED DESCRIPTION

[0066] The following disclosure provides embodiments of systems and methods for treating PNDS and/or UACS, which may be generally referred to herein as "post-nasal drip" or "PND." Certain embodiments include methods and devices for reshaping, remodeling, strengthening, and/or changing a property and/or type of tissue of the nose and/or upper airway, including but not limited to the epithelial layer, skin, muscle, mucosa, submucosa, and cartilage in the upper airway. Certain embodiments may be used to decrease or eliminate mucus production in the upper airway. While some embodiments may change a property of a tissue, such as an ability of a tissue to produce mucus, other embodiments may change a tissue from one type to another type. One example of this latter change is changing goblet cells to scar tissue. Various embodiments may be used to reduce movement of mucus, reduce amount of mucus produced, reduce frequency of mucus production, change the mucus viscosity/consistency, and/or change the path of mucus flow.

[0067] Remodeling or changing the properties of the tissues in the upper airway linings can improve the condition of PND caused by mucus hypersecretion. Methods and devices described herein may be used to treat upper airways without the need for more invasive procedures (e.g., ablation or surgery).

[0068] PND symptoms may be alleviated by decreasing mucus production in the upper airways. In certain implementations, mucus production may be decreased by modifying the properties of mucus producing cells in the upper airway epithelium. In some implementations, modifying the properties of the mucus producing cells may include reducing the rate at which cells produce mucus. In some implementations, modifying the properties of mucus producing cells may include deactivating some or all mucus producing cells in a region. Modifying these cells can be performed alone or together with other procedures (e.g., surgical procedures), such as those described above. Such methods and devices may alleviate PND symptoms.

[0069] Mucus hypersecretion often occurs when a mucus producing cell displays rapid mucus secretion behavior. To prevent this, properties of the cell can be modified to inactivate or retard the cell so as to halt or impede the release of mucins into the airway.

[0070] FIGS. **1**-**5** are provided for background. FIG. **1** is a side-view diagram of a mucus producing cell in the lining of a nasal epithelium. Mucin granules tightly packed in the mucus producing cell (e.g. a goblet cell) before and after release. Before release, mucus condensation is achieved by the granules containing high concentrations of Ca2+, which acts as a "shielding" cation to nullify the repulsive forces within the molecule.

[0071] FIG. **2** is a diagram of a process of exocytosis. As illustrated, an intracellular vesicle (membrane bounded sphere) containing mucins (substance) moves to the plasma membrane and subsequent fusion of the vesicular membrane and plasma membrane ensues.

[0072] FIG. **3** is a diagram of a Ca2+ filled vesicle fusing with a membrane and opening up to an extracellular space containing Na+ and Cl−. The opening of the pore between intragranular space and extracellular space permits water, sodium (and other monovalent cations) to enter the vesicle

and Ca2+ exit. Loss of charge-shielding allows electrostatic repulsion to rapidly expand the mucin polymer network, which facilitates hydration with the incoming water, and the resultant vastly expanded network erupts from the cell in the fashion of a "jack-in-the-box." The mucin expands from the vesicle into the extracellular space at a very rapid rate. This process of mucin granules in mucus producing cells escaping and forming mucus in the airway is known as exocytosis.

[0073] FIGS. **4**A-C are diagrams of a membrane-vesicle fusion process. In FIG. **4**A, the participants of the vesicle-membrane fusion are a vesicle with a receptor, a Rab protein, and a membrane with a receptor. The Rab family of proteins is a member of the Ras superfamily of monomeric G proteins. Only the active form of Rab GTPases is able to regulate membrane fusion.

[0074] In FIG. **4**B, when the vesicle receptor is compatible with the Rab protein, the Rab protein docks onto the vesicle receptor and transports it towards the membrane acceptor. If the membrane acceptor is compatible with the Rab protein, docking occurs as shown.

[0075] In FIG. **4**C, the Rab protein releases the vesicle to allow it to fuse with the membrane, thus kick-starting the exocytosis process illustrated in FIG. **3**.

[0076] FIG. **5** is a side-view diagram of respiratory epithelium, illustrating a process of squamous metaplasia of columnar cells to squamous cells. The mucus producing cells are inactivated by undergoing cell metaplasia, the switching of cells from one type to another. In the presence of stimulants, the mucus producing cells, which are columnar cells, may switch to squamous cells to better protect themselves against these stimulants. When squamous metaplasia occurs, mucus is no longer produced due to the absence of mucus producing cells.

[0077] The measurement of secretion of mucins by mucus producing cells is made indirectly. Radiolabelled precursors of mucin are often used to quantify secretion in vitro and in vivo. Lectin staining, antibodies to mucus, staining with "mucus" stains (in particular Alcian blue and PAS), or usation of endogenous markers for mucus (for example fucose) may each be used to quantify the magnitude of mucus cell secretion. In some embodiments, it may be desirable to measure the secretion of mucins by mucus producing cells prior to, during and/or after a procedure.

[0078] PND occurs when mucus production is excessive and this excess mucus runs down the back of the throat, causing irritation. Modifying properties of the participants of the vesicle-membrane fusion and/or introducing stimulants to encourage squamous metaplasia decreases the likelihood of successful mucus production.

[0079] Some embodiments below provide apparatus and methods for reducing the amount of mucus production from each mucus-secreting cell by modifying the properties of the participants of the vesicle-membrane fusion. Other embodiments below provide apparatus and methods for deactivating mucus producing cells by impairing some or all of their mucus production and cell differentiation abilities, thus reducing the numbers of active mucus producing cells. Still other embodiments combine the two approaches of modifying and inactivating mucus producing cells.

[0080] In some embodiments, the amount of mucus production of each cell can be decreased by: a device or treatment limiting the number of mucins formed in the cell, a device or treatment modifying the mucin receptors such that the receptors are not highly compatible with Rab proteins, a device or treatment limiting the number of active form of Rab GTPases proteins available, and/or a device or treatment modifying the membrane acceptors such that the acceptors are not highly compatible with the Rab protein.

[0081] In some embodiments, the mucus producing cells can be deactivated by: a device or treatment destroying mucins in the cell, a device or treatment destroying mucin receptors such that they cannot receive Rab proteins, a device or treatment destroying the active form of Rab GTPases proteins, a device or treatment destroying membrane acceptors such that the acceptors cannot receive the Rab protein, and/or a device or treatment that causes metaplasia of the mucus producing cells into a non-mucus producing cell type.

[0082] In any one or more of the above mentioned embodiments, such modification and/or inactivation of mucus producing cells may include the application of energy by devices. In some embodiments, energy may be applied in the form of heat, radiofrequency (RF), laser, light, ultrasound (e.g. high intensity focused ultrasound), microwave energy, electromechanical, mechanical force, cooling, alternating or direct electrical current (DC current), chemical, electrochemical, cryogenic or others.

[0083] Any one or more of the above energy-application mechanisms may be used to re-shape, remodel, or change mechanical or physiologic properties of structures of a participant of the vesicle-membrane fusion. The modification results in a tightening, shrinking or enlarging of these participants, resulting in a change of shape, which impedes the exocytosis process.

[0084] In certain implementations, the energy-application mechanisms may be used to re-shape, remodel, or change the mechanical or physiologic properties of structures in order to cause mucus to divert. For example, one or more mucus paths may be diverted so mucus is moved to the lateral walls of the pharynx in addition to or instead of the posterior aspect of the pharynx. In certain implementations, diverting one or more mucus paths may be achieved by selectively treating certain areas of the upper airway.

[0085] In alternative embodiments, conformation changes (i.e., re-shaping) of participants of the vesicle-membrane fusion to impede the exocytosis process may include the healing process. For example, in some embodiments energy may be applied to a participant of the vesicle-membrane fusion in such a way that the healing process causes a change to the shape of the receptors, Rab, and acceptors.

[0086] In some embodiments, energy may be delivered into the cartilage tissue to cause a conformational change and/or a change in the physical properties of the cartilage. For example, in certain embodiments, the physical properties of the cartilage may be changed to divert or otherwise redirect the flow of mucus within the upper airway. Energy delivery may be accomplished by transferring the energy through the tissue covering the cartilage such as the epithelium, mucosa, sub-mucosa, muscle, ligaments, tendon and/or skin. In some embodiments, energy may also be delivered to the cartilage using needles, probes or microneedles that pass through the epithelium, mucosa, submucosa, muscle, ligaments, tendon and/or skin.

[0087] In some embodiments, energy may be delivered into the submucosal tissue to cause a conformational change and/or a change in the physical properties and/or type of the submucosal tissue. Energy delivery may be accomplished by transferring the energy through the tissue covering the submucosa such as the epithelium, mucosa, muscle, ligaments,

cartilage, tendon and/or skin. In some embodiments, energy may also be delivered to the submucosa using needles, probes, microneedles, micro blades, or other non-round needles that pass through the epithelium, mucosa, muscle, ligaments, tendon and/or skin. In certain embodiments, the energy may be delivered through a combination of means. In certain embodiments, the energy may be delivered through one or both of surgical and non-surgical access.

[0088] In some embodiments, energy may be delivered to various tissues in order to achieve desired therapeutic results. The tissue may include, but is not limited to: cilia, goblet cells, nerves (such as the sphenopalatine ganglion), submucosal tissue, and other tissue. For example, in certain implementations, energy may be delivered to nerve tissue that controls the behavior of mucus producing cells or tissue.

[0089] FIG. **6** is a top-view schematic illustration of a mucus reduction treatment device **30**, according to one embodiment. The device **30** comprises a treatment element **32** which may be configured to be placed inside the nasal cavity, nasal passage, nasal airway and/or throat to deliver the desired treatment. In some embodiments, the device **30** may further comprise a handle section **34** which may be sized and configured for easy handheld operation by a clinician. In some embodiments, a display **36** may be provided for displaying information to a clinician during treatment.

[0090] In some embodiments, the information provided on the display **36** may include treatment delivery information (e.g. quantitative information describing the energy being delivered to the treatment element) and/or feedback information from sensors within the device and/or within the treatment element. In some embodiments, the display may provide information on physician selected parameters of treatment, including time, power level, temperature, electric impedance, electric current, depth of treatment and/or other selectable parameters.

[0091] In some embodiments, the handle section **34** may also comprise input controls **38**, such as buttons, knobs, dials, touchpad, joystick, etc. In some embodiments, controls may be incorporated into the display, such as by the use of a touch screen. In further embodiments, controls may be located on an auxiliary device which may be configured to communicate with the treatment device **30** via analog or digital signals sent over a cable **40** or wirelessly, such as via BLUETOOTH, WI-FI (or other 802.11 standard wireless protocol), infrared or any other wired or wireless communication method.

[0092] In some embodiments the treatment system may comprise an electronic control system **42** configured to control the timing, location, intensity and/or other properties and characteristics of energy or other treatment applied to targeted regions of a nasal passageway. In some embodiments, a control system **42** may be integrally incorporated into the handle section **34**. Alternatively, the control system **42** may be located in an external device which may be configured to communicate with electronics within the handle section **34**. A control system may include a closed-loop control system having any number of sensors, such as thermocouples, electric resistance or impedance sensors, ultrasound transducers, or any other sensors configured to detect treatment variables or other control parameters.

[0093] The treatment system may also comprise a power supply **44**. In some embodiments, the power supply **44** may be integrally incorporated within the handle section **34**. In alternative embodiments, the power supply **44** may be external to the handle section **34**. An external power supply **44** may be configured to deliver power to the handle section **34** and/or the treatment element **32** by a cable or other suitable connection. In some embodiments, the power supply **44** may include a battery or other electrical energy storage or energy generation device. In other embodiments, the power supply **44** may be configured to draw electrical power from a standard wall outlet. In some embodiments, a power supply **44** may also include a system configured for driving a specific energy delivery technology in the treatment element **32**. For example, the power supply **44** may be configured to deliver a radio frequency alternating current signal to an RF energy delivery element.

[0094] Alternatively, the power supply **44** may be configured to deliver a signal suitable for delivering ultrasound or microwave energy via suitable transducers. In further alternative embodiments, the power supply **44** may be configured to deliver a high-temperature or low-temperature fluid (e.g. air, water, steam, saline, or other gas or liquid) to the treatment element **32** by way of a fluid conduit.

[0095] In some embodiments, the treatment element **32** may have a substantially rigid or minimally elastic shape sized and shaped such that it substantially conforms to an ideal shape and size of a patient's nasal passageway and/or upper airway. In some embodiments, the treatment element **32** may have a curved shape, either concave or convex with respect to the interior of the lateral wall of the nasal passage and/or upper airway.

[0096] In some embodiments, the treatment element **32** may be configured to deliver energy (e.g. heat, RF, ultrasound, microwave) or cryo-therapy uniformly over an entire outer surface of the treatment element, thereby treating all nasal and/or upper airway tissues in contact with the treatment element **32**. Alternatively, the treatment element **32** may be configured to deliver energy at only selective locations on the outer surface of the treatment element **32** in order to treat selected regions of upper airway tissues. In such embodiments, the treatment element **32** may be configured so that energy being delivered to selected regions of the treatment element **32** can be individually controlled. In some embodiments, portions of the treatment element **32** are inert and do not deliver energy to the tissue. In further alternative embodiments, the treatment element **32** may be configured with energy-delivery (or removal) elements distributed over an entire outer surface of the treatment element **32**. The control system **42** may be configured to engage such distributed elements individually or in selected groups so as to treat only targeted areas of the upper airway passageway.

[0097] In some embodiments, the treatment element **32** may be configured to deliver heat energy to the upper airway tissues. In such embodiments, the treatment element **32** may comprise any suitable heating element available to the skilled artisan. For example, the treatment element **32** may comprise electrical resistance heating elements. In alternative embodiments, the heating element may comprise conduits for delivering high-temperature fluids (e.g. hot water or steam) onto the tissue. In some embodiments, a high-temperature fluid heating element may comprise flow channels which place high-temperature fluids into conductive contact with tissues (e.g. through a membrane wall) without injecting such fluids into the patient's nose. In further embodiments, any other suitable heating element may be provided. In further embodiments, the treatment element **32** may comprise elements for delivering energy in other forms such as light, laser, RF, microwave, cryogenic cooling, DC current and/or ultrasound

in addition to or in place of heating elements. In alternative embodiments, similar effects can be achieved through the use of energy removal devices, such as cryogenic therapies configured to transfer heat energy out of selected tissues, thereby lowering the temperature of targeted tissues until a desired level of tissue modification is achieved.

[0098] In some embodiments, the treatment element **32** may be an inflatable balloon with energy delivery elements that deliver heat by circulating a fluid of elevated temperature though the inflated balloon during treatment. The balloon can also deliver cryotherapy (e.g. by circulating a low-temperature liquid such as liquid nitrogen) while it is enlarged to increase the surface area of contact between the treated tissue and treatment element **32**.

[0099] Several embodiments may be employed for delivering energy treatment over a desired target area. For example, in some embodiments, a laser treatment system may treat a large surface area by scanning a desired treatment pattern over an area to be treated. In the case of microwave or ultrasound, suitably configured transducers may be positioned adjacent to a target area and desired transducer elements may be activated under suitable depth focus and power controls to treat a desired tissue depth and region. In some embodiments, ultrasound and/or microwave treatment devices may also make use of lenses or other beam shaping of focusing devices or controls. In some embodiments, one or more electrical resistance heating elements may be positioned adjacent to a target region, and activated at a desired power level for a therapeutically effective duration. In some embodiments, such heating elements may be operated in a cyclical fashion to repeatedly heat and cool a target tissue. In other embodiments, RF electrodes may be positioned adjacent to and in contact with a targeted tissue region. The RF electrodes may then be activated at some frequency and power level therapeutically effective duration. In some embodiments, the depth of treatment may be controlled by controlling a spacing between electrodes. In alternative embodiments, RF electrodes may include needles which may puncture a nasal or upper airway tissue to a desired depth (as shown for example in FIG. **10** and in other embodiments below).

[0100] In some embodiments, the treatment element **32** and control system **42** may be configured to deliver treatment energy or cryotherapy to a selected tissue depth in order to target treatment at specific tissues. For example, in some embodiments, treatments may be targeted at completely inactivating mucus producing cells. In other embodiments, treatments may be targeted at modifying the mucus production capacity of these cells.

[0101] In some embodiments, the treatment element **32** and control system **42** may be configured to deliver treatment energy to create specific localized tissue damage or ablation, stimulating the body's healing response to create desired conformational or structural changes that reduces the mucus producing ability of the mucus producing cells.

[0102] In some embodiments, the treatment element **32** and control system **42** may be configured to create specific localized tissue damage or ablation without the application of energy. For example the treatment element **32** may be configured to chemically cauterize tissue in an upper airway passage by delivering a cauterizing agent (e.g., silver nitrate, trichloroacetic acid, cantharidin, etc.) to the tissue. The treatment element **32** may comprise apertures configured to permit the cauterizing agent pass through to the upper airway. In some embodiment, the treatment element **32** may aerosolize the cauterizing agent. Other delivery methods are also contemplated. The treatment element **32** may comprise a lumen through which the cauterizing agent passes. The lumen may be fluidly connected to a reservoir or container holding the cauterizing agent. The device may comprise an input control (e.g., a button or switch) configured to control the delivery of the cauterizing agent. In some embodiments, the treatment element **32** comprises an applicator that can be coated in a cauterizing agent (e.g., dipped in a reservoir of cauterizing agent, swabbed with cauterizing agent, etc.) and the coated treatment element applicator may be applied to tissue to be treated. In some embodiments, the treatment element **32** may be configured to apply cauterizing agent to the patient over a prolonged period of time (e.g., 30 seconds, 1 minute, 2 minutes, etc.). In some embodiment, the treatment element **32** comprises shields configured to protect tissue surrounding the tissue to be treated from coming into contact with the cauterizing agent. In some embodiments, a separate element is used to shield tissue surrounding the tissue to be treated from coming into contact with the cauterizing agent. While such treatments may be performed without the application of energy, in some embodiments, they are performed in conjunction with energy treatments.

[0103] In some embodiments, the treatment device **30** is configured to position tissue to be treated. In some embodiments, the device **30** comprises features and mechanisms to pull, push or position the upper airway tissue into a placing such that it is accessible to the device **30**. For example, suction, counter traction, or compression between two parts of the device **30** may be used.

[0104] In some embodiments, the treatment device **30** comprises one, two, three, four, or more molds configured to position tissue. The mold or positioning element may be fixed in size or may vary in size. The mold may also be fixed in shape or may vary in shape. For example, the size or shape of the element may be varied or adjusted to better conform to an upper airway passage of a patient. Adjustability may be accomplished using a variety of means, including, for example, mechanically moving the mold by way of joints, arms, guidewires, balloons, screws, stents, and scissoring arms, among other means. The mold may be adjusted manually or automatically.

[0105] In some embodiments, the treatment device **30** may be configured to heat specific tissue while maintaining a relatively lower temperature in other adjacent tissue. It may be beneficial to confine heat energy applied to mainly the tissue to be treated. Adjacent tissues such as a basement membrane and skin may be maintained at different temperatures. Limiting unwanted heating of non-target tissues may allow trauma and pain to be reduced, may reduce scarring, may preserve tissue function, and may also decrease healing time. Combinations of heat transfer and/or heat isolation may allow directed treatment of specific tissue such as cells, while excluding another tissue, such as skin, without surgical dissection.

[0106] In some embodiments, the mold or positioning element comprises a separate or integrated energy delivery or treatment element **32** (e.g., an electrode such as those described below with respect to FIGS. **12**A-E). The treatment element **32** may be fixed or adjustable in size.

[0107] For example, the treatment element **32** may be adjusted to better conform to the upper airway passage of a patient. In the case of a separate positioning element and treatment element **32**, a distance between the two elements

may either be fixed or adjustable. Adjustability may be accomplished using a variety of means, including, for example, mechanically moving the mold by way of joints, arms, guidewires, balloons, screws, stents, and scissoring arms, among other means. In some embodiments, the mold or another part of the device **30** is configured to deliver cooling (discussed in more detail below). In some embodiments, the mold or repositioning element comprises a balloon configured to reposition and/or modify tissue. A balloon may also be configured to deliver energy such as heat using hot liquid or gas.

[0108] In some embodiments (e.g., as shown in FIG. **6**) the treatment element **32** may comprise a substantially cylindrical central portion with a semi-spherical or semi-ellipsoid or another shaped end-cap section at proximal and/or distal ends of the treatment element **32**. In alternative embodiments, the treatment element may comprise a substantially ellipsoid shape as shown, for example in FIGS. **7-10**.

[0109] FIG. **7** is a perspective diagram of a treatment portion shape for a treatment portion **46** of a mucus reduction treatment device, according to one embodiment. In some embodiments, the treatment portion **46** may be an ellipsoid balloon having an asymmetrical shape. In alternative embodiments, the treatment portion **46** may have an asymmetrical "egg-shape" with a large-diameter proximal end and a smaller diameter distal end. Any suitable solid or expandable medical balloon material and construction available to the skilled artisan may be used.

[0110] FIG. **8** is a perspective illustration of a treatment portion **48** of a mucus reduction treatment device, according to an alternative embodiment. The treatment portion **48** may be configured to deliver energy to an interior of an upper airway. In some embodiments, the treatment element **48** may include an expandable balloon.

[0111] FIG. **9** is a perspective illustration of a bifurcated treatment element **70** of a mucus reduction treatment device, according to another alternative embodiment. The bifurcated treatment element **70** may have a pair of semi-ellipsoid elements **72**, **74** sized and configured to be inserted into the nose with one element **72**, **74** on either side of the septum. The elements may each have a medial surface **75***a* and **75***b*, which may be substantially flat, curved or otherwise shaped and configured to lie adjacent to (and possibly in contact with) the nasal septum. In some embodiments, the elements **72**, **74** may include expandable balloons with independent inflation lumens **76**, **78**. In alternative embodiments, the elements **72**, **74** have substantially fixed non-expandable shapes. In still further embodiments, the elements **72**, **74** may include substantially self-expandable sections. In some embodiments, the bifurcated treatment element halves **72**, **74** may also carry energy delivery structures as described elsewhere herein. In some embodiments, the shape of the elements **72**, **74** may be modified by the operator to impart an optimal configuration to the treated tissue.

[0112] Some embodiments of treatment elements may comprise one or more inflatable or expandable sections configured to expand from a collapsed configuration for insertion into the nasal passageway and/or throat, to an expanded configuration in which some portion of the treatment element contacts and engages an internal surface of an upper airway. In some embodiments, an expandable treatment element may comprise an inflation lumen configured to facilitate injection of an inflation medium into an expandable portion of the treatment element. In alternative embodiments, an expandable treatment element may comprise one or more segments comprising a shape-memory alloy material which may be configured to expand to a desired size and shape in response to a change of temperature past a transition temperature. In some embodiments, such a temperature change may be brought about by activating an energy-delivery (or removal) element in the treatment element.

[0113] In some embodiments, the treatment element may expand with various locations on the element expanding to different configurations or not expanding at all to achieve a desired shape of the treatment element. In some embodiments, such expandable treatment elements or sections may be elastic, inelastic, or pre-shaped. In some embodiments, expandable treatment elements or sections thereof may be made from shape-memory metals such as nickel-cobalt or nickel-titanium, shape memory polymers, biodegradable polymers or other metals or polymers. Expandable balloon elements may be made of any elastic or inelastic expandable balloon material.

[0114] FIG. **10** is a cross-sectional view of a distal end **80** of a treatment portion **82** of a treatment device, showing microneedles **84** puncturing tissue **86** in order to apply treatment at a desired tissue depth, according to one embodiment.

[0115] Treatment elements may be generally configured to be used once and removed from a patient's upper airway once a treatment is delivered. In some embodiments, treatments may further involve placing longer term treatment elements, such as stents, molds, external strips, etc. for a period of time after treatment.

[0116] FIG. **11** is a perspective view of an energy delivery balloon **92**, including a needle portion **94** being inserted into a nose **90**, according to one embodiment.

Examples of Various Electrode Arrangements

[0117] Described below are embodiments of various treatment devices and, more particularly, electrode arrangements that may be used for applying energy to the upper airway. These electrodes may, for example, deliver RF energy to modify properties of mucus producing cells and/or glands to reduce mucus production. In some embodiments, one or more electrodes may be used alone or in combination with a tissue positioning device or mold.

[0118] In other embodiments, one or more electrodes may be integrally formed with a tissue positioning device or mold, so that the electrodes themselves hold the position of the tissue. In some embodiments, the energy delivery devices may use alternating current. In some embodiments, the energy delivery devices may use direct current. In certain such embodiments, the energy delivery device may comprise a configuration using a grounding pad.

[0119] In some embodiments, the term "electrode" refers to any conductive or semi-conductive element that may be used to treat the tissue. This includes, but is not limited to metallic plates, needles, and various intermediate shapes such as dimpled plates, rods, domed plates, blades, etc. Electrodes may also be configured to provide tissue deformation in addition to energy delivery. Unless specified otherwise, electrodes described can be monopolar (e.g., used in conjunction with a grounding pad) or bipolar (e.g., alternate polarities within the electrode body, used in conjunction with other tissue-applied electrodes). In some embodiments, "counter-traction" refers to applying a force opposite the electrode's primary force on the tissue to increase stability, adjustability, or for positioning tissue.

[0120] FIGS. **12**A-E are cross-sectional views of various electrode arrangements for applying energy to the treatment tissue in the nose or throat according to various embodiments. As shown in FIG. **12**A, in some embodiments, bipolar electrodes may be used to deliver energy, with one electrode **202** placed internally in the nose or throat, and one electrode **204** placed externally on the outside of the nose or throat. This embodiment may advantageously provide direct current flow through the tissue with no physical trauma from needles (as shown in some embodiments below).

[0121] As shown in FIG. **12**B, in some embodiments, bipolar electrodes may be used to deliver energy, with both electrodes **210**, **212** placed internally. An insulating spacer **214** may be placed between them. This embodiment may be simple and may advantageously minimize current flow through the skin layer.

[0122] FIG. **12**C illustrates certain embodiments wherein bipolar electrodes **220**, **222** may be both placed externally and may be connected to a passive positioning element **224** placed inside the nose or throat, adjacent to tissue to be treated. This embodiment may advantageously minimize the potential for mucosal damage. In some embodiments, electrodes placed internally may be shaped to function as a positioning element or may comprise an additional structure that may function as a positioning element.

[0123] FIG. **12**D illustrates certain embodiments wherein a monopolar electrode **230** may be used to deliver energy. The electrode **230** may be placed internally and may be connected to an external, remote grounding pad **232**. The grounding pad **232** may, for example, be placed on the abdomen of a patient or in other desired locations. This embodiment may advantageously be simple to manufacture and may minimize current flow through the skin. In some embodiments, a monopolar electrode may be placed externally and may be connected to a positioning element placed inside the nose or throat as well as a remote grounding pad. This embodiment may also advantageously be simple to manufacture, may minimize mucosal current flow, and may also be simple to position. In some embodiments, electrodes placed internally may be shaped to function as a positioning element or may comprise an additional structure that may function as a positioning element.

[0124] FIG. **12**E illustrates certain embodiments wherein monopolar transmucosal needle electrodes **240** may be used to deliver energy. The needle electrodes **240** may be placed internally and penetrate through the mucosa to the cartilage. A remote grounding pad **242** or element may be placed externally. In some embodiments, monopolar transmucosal needles may be used in conjunction with one or more positioning elements which may be disposed on or around the needles. In some embodiments, monopolar transdermal needles may be used to deliver energy. In other embodiments (not shown), the needles may be placed external to the nose or throat, and penetrate through to tissue to be treated. Needle configurations may advantageously target the upper airway tissue to be treated specifically. The monopolar transdermal needles may be used in conjunction with an internal positioning device (not shown).

[0125] In some embodiments, bipolar transmucosal needles may be used to deliver energy to tissue to be treated. The needles may be placed internally, with an insulating spacer between them and may penetrate through cell membrane to the mucins and/or Rab and/or other exocytosis components to be treated. In some embodiments, the bipolar transmucosal needles may be used in combination with one or more internal positioning elements. The one or more positioning elements may be placed on or near the needles. In some embodiments, bipolar transdermal needles may be used to deliver energy. In other embodiments, the transdermal needles may be placed externally and penetrate through to tissue to be treated. Needle configurations may advantageously target the mucus producing cells to be treated specifically. The transdermal bipolar needles may be used in conjunction with an internal positioning element.

[0126] FIG. **13** is a perspective view of an electrode arrangement of a treatment element **250** according to one embodiment. An array of electrodes comprising one, two, or many pairs of bipolar needles **252** may be located on the treatment element **250** and be configured to be placed into contact with the mucus producing cells. An insulator **254** may be disposed between the bipolar needles **252**. An insulator may also be used on part of the needle's length to allow energy to be delivered only to certain tissue structures, such as mucus producing cells. The electrodes may be placed either internally or transmucosally or they may be placed externally or transdermally. In some embodiments, the insulator **254** may also function as a positioning element. In other embodiments (not shown), the array of electrodes may be used in conjunction with a separate tissue positioning element.

[0127] FIG. **14** is a perspective view of an electrode arrangement of a treatment element **256** according to one embodiment. The treatment element **256** may comprise one, two or many pairs of bipolar electrodes **258**. An insulator **260** may be disposed between the bipolar electrodes **260**. As opposed to the electrode arrangement shown in FIG. **13**, where the pairs of electrodes are arranged side-by-side, the embodiment of FIG. **14** arranges the pairs of electrodes **258** along the length of the treatment element **256**. In some embodiments, the electrodes may be non-penetrating, in contrast to the needles **252** of FIG. **13**. The electrodes **258** may be placed against either the skin, externally, or the mucosa, internally as a means of delivering energy to target tissue such as mucus producing cells.

[0128] In some embodiments of treatment devices comprising an array or multiple pairs of electrodes, each pair of electrodes (bipolar) or each electrode (monopolar) may have a separate, controlled electrical channel to allow for different regions of the treatment element to be activated separately. For example, in some embodiments, needles or needle pairs may be individually controlled to produce an optimal treatment effect. For another example, in some embodiments, separate electrodes (e.g. those of FIGS. **12**B and **12**C) may be individually controlled to produce an optimal treatment effect. Other examples are also contemplated. The channels may also comprise separate or integrated feedback. This may advantageously allow for more accurate temperature control and more precise targeting of tissue. Separate control may also allow energy to be focused and/or intensified on a desired region of the treatment element in cases where the anatomy of the upper airway tissue/structures does not allow the entire electrode region of the treatment element to engage the tissue. In such embodiments, the upper airway tissue that is in contact with the treatment element may receive sufficient energy to treat the tissue.

[0129] FIGS. **15**A-C are cross-sectional views of various electrode arrangements for applying energy to the treatment tissue in the nose or throat according to various embodiments. Combinations of the described electrode configurations may be used to deliver energy to tissue to be treated. For example,

FIG. **15**A illustrates internally-placed transmucosal needles **264** penetrating through to tissue to be treated and an external electrode **266** according to one embodiment. This embodiment may advantageously target the mucus producing and/or controlling cells specifically and be biased for mucosal preservation.

[0130] FIG. **15**B illustrates externally-placed transdermal needles **268** and an internally-placed electrode **270** according to one embodiment. This embodiment may advantageously target the mucus producing and/or controlling cells specifically and be biased towards skin preservation.

[0131] FIG. **15**C illustrates bipolar needle electrodes **272**, **274** be placed both transdermally or externally and transmucosally or internally according to one embodiment. This embodiment may advantageously target the mucus producing cells specifically. Some embodiments of treatment elements may include inert areas which do not delivery energy to the tissue. Other combinations of electrode configuration are also possible.

Multi-Channel Configuration

[0132] During treatment, each pair of electrodes may have varying degrees of contact with the tissue, depending on the skills and habits of the device user. For a configuration in which all pairs of electrodes are controlled by one main electrical channel, this can lead to varying magnitudes of treatment energy passing through each electrode pair.

[0133] The pair/pairs of electrode that has/have a higher degree of contact with the tissue, will experience higher magnitudes of impedance in their/its individual circuit. Since treatment energy takes the path of least resistance, this can lead to treatment energy being diverted to the other pair/pairs of electrodes that experiences/experience a relatively lower magnitude of impedance due to relatively lower degrees of tissue contact.

[0134] This creates a situation in which the treatment energy flowing through each pair of electrodes is not repeatable due to the electrodes-tissue contact being user dependent. To ensure a greater degree of control and accuracy over the treatment energy through each electrode, each pair of electrodes may have a separate, controlled electrical channel to allow for different regions of the treatment element to be activated separately. Each electrode pair may also be paired up with its own thermocouple.

[0135] An intermittent electrode-tissue contact may also result in coagulum forming due to fluctuating waveform. When electrode-tissue contact is intermittent, the impedance value fluctuates and the power delivered also has to adapt rapidly in order to reach or maintain set temperature. This may be conducive for coagulum to form on the electrode, causing impedance to rise. This starts a cycle of escalating power delivered and impedance increment with coagulum build up on the electrodes, causing the treatment process to be less effective. Hence, there is a need for a system set up which ensures repeatable and controllable delivery of treatment energy to each electrode pair in order to achieve the desired surgery outcome. The system may comprise one or more thermocouples and an RF output channel assigned to each electrode pair for feedback.

[0136] FIGS. **16**A-I are cross-sectional views of various permutations of electrodes-thermocouples combinations for a multi-channel configuration according to various embodiments. FIG. **16**A illustrates a cross-sectional view of an electrode arrangement according to one embodiment, including a row of positive electrodes spaced from a row of negative electrodes and a row of thermocouples, including electrode **363** and electrode **364**. A pair of electrodes **363**, **364** may have its own individual subsystem **360** of controlled RF output channel **361** and thermocouple **362** to allow for independent adjustments. The thermocouple **362** act as a feedback-control to ensure that proper temperature is maintained at the site of surgery.

[0137] In certain implementations, the nasal treatment device may include one or more thermocouples **362** and an RF output channel **361** assigned to each electrode pair for feedback. An electrode pair may include a positive electrode **363** and a negative electrode **364**. In some embodiments, the positive electrode **363** and the negative electrode **364** may be positioned opposite to one another. Each electrode pair may have its own individual subsystem **360**. The individual subsystem **360** may include a controlled RF output channel **361** and a thermocouple **362** to allow for independent adjustments. The thermocouple **362** may act as a feedback control to ensure that proper temperature is maintained at the site of treatment.

[0138] FIG. **16**B illustrates a cross-sectional view of an electrode arrangement according to one embodiment that provides a means to allow pairing of any of the positive electrode to any of the negative electrode to form a complete circuit. A positive electrode **363** may be paired with the opposite negative electrode (e.g., as shown in FIG. **16**A) or to any of the other negative electrodes (e.g. negative electrode **364**) regardless of its location in the device. The device may include a plurality of thermocouples **362** and an RF output channel **361** assigned to each pair of electrodes for feedback. Temperature readings from two adjacent thermocouples **362** may be averaged to obtain a temperature reading for the region in which the circuit is located. In some embodiments, the two thermocouples **362** may be the thermocouples in the closest proximity to the positive electrode **363** and the negative electrode **364**.

[0139] FIG. **16**C illustrates a cross-sectional view of an electrode arrangement according to one embodiment. In certain embodiments, the electrode array may be arranged such that each electrode pair of the array of electrodes may have its own individual subsystem **370**. An electrode pair may include a positive electrode **373** and a negative electrode **374**. Each individual subsystem **370** may include controlled RF channels **371**, a first thermocouple **372***a*, and a second thermocouple **372***b* to allow for independent temperature readings and/or individual temperature adjustments. In certain implementations, the temperature input signals sensed from neighboring thermocouples **372***a* and **372***b* are electronically subtracted from each other and act as a feedback-control to ensure that proper temperature is maintained at the treatment site. In certain implementations, a temperature reading for an individual subsystem **370** may be obtained from the average temperature input signals of the neighboring thermocouples **372***a* and **372***b*. The temperature reading may act as a feedback control to ensure that proper temperature is maintained at the treatment site.

[0140] FIGS. **16**D and **16**E illustrate a cross-sectional view of an electrode arrangement according to various embodiments. In certain implementations, a device may include multiplexed configurations by providing functionality to allow pairing of any of the positive electrodes **373** to any of the negative electrodes **374** to form a complete circuit. A positive electrode **373** may be paired with the opposite negative elec-

trode **374**, or to any of the other negative electrodes **374** regardless of its location in the device. FIG. **16**D shows one example where temperature readings may be the average of three adjacent thermocouples **372***a*, **372***b*, and **372***c*. FIG. **16**E shows one example where temperature reading may be the average of four adjacent thermocouples **372***a*, **372***b*, **372***c*, and **372***d*. It will be appreciated that the average of any number of thermocouples may be used to obtain a temperature reading.

[0141] FIG. **16**F illustrates a cross-sectional view of an electrode arrangement according to one embodiment. In certain implementations, the positive electrodes **383** may be configured to share a common negative electrode **384**. While the negative electrode **384** is common, each positive electrode **383** may be independently controlled to achieve desired treatment. In some embodiments, a temperature reading may be obtained from temperature input signals sensed from one or more thermocouple **382**. In certain implementations, each RF output channel may comprise a positive electrode and the negative electrode.

[0142] FIG. **16**G illustrates a cross-sectional view of an electrode arrangement according to one embodiment. In certain implementations, all the positive electrodes **393** may share a common negative electrode **394**.

[0143] FIG. **16**H illustrates a cross-sectional view of an electrode arrangement according to one embodiment. In some embodiments, the positive electrodes **393** of the array of electrodes may share a common negative electrode **394**. Each RF output channel may include a positive electrode **393** and the negative electrode **394**. While the negative electrode **394** is common, each positive electrode **393** may be independently controlled to achieve the desired treatment. In some embodiments, a temperature reading may be obtained from temperature input signals sensed from one or more thermocouples **392**.

[0144] FIG. **16**I illustrates a cross-sectional view of an electrode arrangement according to one embodiment. In this configuration there are two rows with the same polarity and a third row with a different polarity. For example, as shown in FIG. **16**I, the outer rows of electrodes **397** have a positive polarity and the inner row of electrodes **398** has a negative polarity. Interspersed between the rows are a first and second row of thermocouples **396**. This configuration may affect a larger area than other configurations.

Examples of Treatment Devices Including Electrodes

[0145] Embodiments of treatment devices incorporating treatment elements such as the electrodes described above are illustrated in FIGS. **17**-**19**B. The designs described in these embodiments may be used in various devices, for example the device **30**, described above. In certain embodiments, the devices provide tissue modification via energy delivery. Applying energy to the upper airway may require properly positioning the electrode(s) at the region to be treated, and delivering or applying energy consistently prior to device removal. Embodiments described herein may advantageously provide adjustability, visualization of effect, ease of use, ease of manufacturability and component cost.

[0146] FIG. **17** is a perspective view of a device **300** for applying energy to upper airway tissues using monopolar electrodes according to one embodiment. The device **300** may comprise a single inter-nasal monopolar electrode **301** located at the end of a shaft **302**. A handle **303** may be attached to the shaft. In certain implementations, the electrode configuration may be similar to that described with respect to FIG. **12**D.

[0147] FIG. **18** is a perspective view of a device **304** for applying energy to upper airway tissues using monopolar electrodes according to one embodiment. In certain implementations, the device **304** may comprise a single inter-nasal, monopolar electrode **305**. The electrode **305** is located at the distal end of a shaft **306**, which is attached to a handle **307**. The handle **309** comprises a power button **308** that may be used to activate and deactivate the electrode. As stated above, the device **304** may either comprise a generator or be connected to a remote generator. The electrode **305** may be provided on an enlarged, distal end of the shaft **306**.

[0148] FIG. **19**A is a perspective view of a device **347** for applying energy to the upper airway tissues using a bipolar electrode according to one embodiment. FIG. **19**B illustrates an enlarged perspective view focusing on the treatment portion **350** of the device **347**. In certain implementations, the device **347** may include a handle **348**, a shaft **349**, a treatment portion **350**, radiofrequency electrodes **352** (such as bi-polar electrodes), a trough **354**, and a thermocouple **356**.

[0149] The handle **348** may be an area by which the device **347** may be held. The proximal end of the shaft **349** may be connected to the distal end of the handle **348**.

[0150] The shaft **349** may be an elongate member extending from the handle **348**. In certain implementations, the shaft **349** may be adjustable or otherwise malleable. For example, in certain implementations, the shaft **349** may be malleable or otherwise able to be formed into a particular shape and substantially retain the shape. The adjustability of the shaft **349** may enable a clinician to re-shape the shaft **349** to improve the ability of the device **347** to navigate nasal or other anatomy. The adjustability may also enable the electrodes **352** to be positioned to contact tissues to be treated.

[0151] The treatment portion **350** has tissue contact surface (or "treatment surface"), which is the surface of the treatment portion **350** that includes the multiple features for addressing and treating tissue, such as mucosal tissue. The treatment surface of the treatment portion **350** includes the concave-shaped trough **354** and two rows of electrodes **352** separated by the thermocouple **356**, which is disposed within the trough **354**. The electrodes **352** and the thermocouple **356** are both raised off of the treatment surface in this embodiment. However, other configurations are also possible (see, e.g., FIGS. **16**A-I for other configurations of electrodes and thermocouples). In certain implementations, the treatment portion **350** may also be adjustable. For instance, the treatment portion **350** may be capable of being bent, twisted, rotated, flexed, or otherwise articulated to facilitate treatment.

[0152] In various alternative embodiments, the electrodes **352** may be replaced with any other suitable treatment delivery members. In various embodiments, for example, other forms of energy may be delivered by alternative energy delivery members. Such energy forms may include, but are not limited to, ultrasound, microwave, heat, radiofrequency, electrical, light and laser energy. In another alternative embodiment, energy may be removed from tissue by the treatment portion **350**, via one or more cryotherapy members on the tissue contact surface. In yet other embodiments, the treatment portion **350** may include one or more substance delivery members. In certain implementations, the treatment portion **350** may be flush with the shaft **349**, be an area of increased diameter of the shaft **349**, or a combination thereof. In certain

implementations, the treatment portion **350** may extend laterally from the distal end of the shaft **349**.

[0153] The electrodes **352** may be recessed from, flush with, and/or protrude from the treatment portion **350**. The electrodes **352** may extend substantially perpendicularly from the treatment portion **350** and/or may extend at a non-perpendicular angle. The rows of electrodes **352** may, but need not, extend parallel to each other. In certain implementations, one or more electrodes **352** may be designed to avoid puncturing tissue (e.g. by having blunt, rounded, or otherwise atraumatic tips). In certain other implementations, one or more electrodes **352** may be designed to puncture tissue.

[0154] The trough **354** may be an elongate, concave channel that runs substantially along the length of the treatment portion **350**. In certain implementations, the trough **354** may be sized to or otherwise configured to match the size and/or shape of a nasal turbinate, such as the inferior nasal concha.

[0155] The thermocouple **356** may be one or more sensors configured to gather one or more temperature readings of tissue during operation of the device **347**. In certain implementations, the thermocouple **356** may rest substantially flush with the trough **354**. In certain other implementations, the thermocouple **356** may protrude from the trough **354**. In certain embodiments, the protrusion may be slight, such that the thermocouple **356** remains within the trough **354**, in other embodiments, the thermocouple **356** may extend out of the trough **354**.

[0156] The electrodes **352** and the thermocouple **356** may be connected with a device control system connected integrated with or attached to the device **347**. For example, the device **347** may comprise a generator or a means for connecting to a remote generator. This connection may be established through wires extending the length of the shaft **349** to a connection within a handle of the device **347**.

[0157] FIG. **20** is a flow diagram of an example method **500** of use of various devices, including the device **347**. In certain implementations, the method **500** may include preparing the device **502**, advancing a portion of the device to a treatment site **504**, delivering therapy to the treatment site **506**, and removing the treatment device **508**.

[0158] In certain implementations, the method **500** may start at the step of preparing the device **502**. Preparing the device **502** may include removing the device from sterile packaging, assembling one or more components of the device, sterilizing the device, attaching the device to an energy source, and/or other preparatory work. In certain implementations, this step may include customizing the device to suit the particular needs of the patient and the clinician. This may include articulating, manipulating, or otherwise changing one or more components of the device. For example, a clinician may articulate or bend the shaft **349** and/or the treatment portion **350** to place the device in a first, desired configuration. The first, desired configuration may be selected to facilitate navigation of the nasal anatomy of the particular patient to reach the desired treatment site.

[0159] In certain circumstances, preparing the device **502** may follow removing the treatment device **508**. For example, the clinician may determine that the device is not suitable in its current state, remove the device, and then reconfigure the device in a more suitable format (e.g. a second configuration).

[0160] Advancing a portion of the device to a treatment site **504** may follow the preparation of the device **502**. For example, the clinician may navigate the patient's nasal anatomy with the device **347** in the first configuration. Specifically, the clinician may advance a treatment portion of the treatment device into a nostril of the patient to contact a treatment surface of the treatment portion with mucosal tissue of the upper airway. This step **504** may be performed without piercing the mucosal tissue. The goal of the navigation may be to place the treatment element in contact with the treatment site.

[0161] In certain circumstances, advancing a portion of the device to a treatment site **504** may follow the removal of the treatment device **508**. In this circumstance, this step may include the clinician wholly or partially re-navigating the device through the nasal anatomy to improve, for example, contact between the treatment portion **350** and the treatment site.

[0162] During navigation, the clinician may perform one or more tests to determine whether proper contact with the treatment site has been made. For example, the clinician may activate one or more pairs of the electrodes (such as electrodes **352**). Based on measured results, the clinician may determine that proper contact has not been achieved because an energy pathway could not be made between one or more pairs of electrodes and/or that one or more measured electrical parameters (e.g., impedance, voltage, current, etc.) is outside of a desired range. As another example, the clinician may attempt to apply pressure to the treatment site with the treatment portion **350** and determine by feel whether proper contact has been made. As yet another example, the clinician may take a reading using a thermocouple (such as thermocouple **356**) to determine whether proper contact has been made.

[0163] Based on the one or more tests, the clinician may determine that proper contact has been made between the treatment portion and the treatment site. In this situation, the flow may move to the step of delivering therapy to the treatment site **506**. In certain circumstances, the clinician may determine that proper contact has not been made or that the device is otherwise unsuitable in its current state. In this situation, the flow may move to the step of removing the treatment device **508**.

[0164] Delivering therapy to the treatment site **506** may follow advancing a portion of the device to a treatment site **504**. In this step, the clinician may cause the device to apply energy to the treatment site. For example, in certain implementations, a clinician may use the device to apply energy to the posterior aspect of the inferior turbinate. For this treatment, it may be desirable to press the treatment portion against the tissue of the posterior aspect of the inferior turbinate such that the tissue substantially conforms to the shape of the treatment element.

[0165] For instance, a concave shape may be formed on the tissue turbinate against the convex shape of the treatment portion **350** of device **347**. The electrodes **352** may create indentations within the tissue. A portion of the tissue may be enter and conform to the shape of the trough **354** and contact the thermocouple **356**. While the tissue is in this configuration, the clinician may activate one or more pairs of electrodes **352** to deliver therapy to the treatment site. In certain implementations, delivering therapy to the treatment site **506** may include delivering radiofrequency energy from a first electrode on the treatment portion **350** across the trough **354** of the treatment portion **350** to a second electrode on the treatment portion **350**, to treat at least one tissue selected from the group of the mucosal tissue and another tissue underlying the

mucosal tissue to modify a property of the at least one tissue and thus treat at least one of post nasal drip or chronic cough in the patient.

[0166] The step of removing the treatment device **508** may follow from the step of advancing a portion of the device to a treatment site **504** and/or delivering therapy to the treatment site **506**. In certain circumstances, the clinician may remove part or all of the device from the nasal anatomy of the patient. The clinician may determine that one or more further adjustments may improve contact between the treatment portion and the treatment site or otherwise achieve improved therapeutic results. In such circumstances, the flow may move to the step of preparing the device **502**. For example, the clinician may articulate one or more components of the device to place the device in a second configuration. The clinician may then navigate the nasal anatomy again and deliver therapy to the treatment site.

[0167] When the step of removing the treatment device **508** follows from delivering therapy to the treatment site **506**, the clinician may simply remove the device from the patient and end the procedure. In certain other circumstances, the clinician may partially or wholly remove the device and repeat one or more of the steps of the method **500** in order to more fully treat the treatment site and/or treat other treatment sites. In certain circumstances, the method **500** may end after step **508**. While this method **500** has been described with reference to device **347**, the method **500** may be used with some or all of the other devices and methods disclosed herein.

[0168] FIGS. **21**A-B are perspective views of a device **310** for applying energy to the upper airway tissues using bipolar electrodes and a positioning element according to one embodiment. FIG. **21**A depicts the device **310** comprising bipolar electrodes **312** located at the end of a shaft **316**. The shaft **316** may be attached to a handle **314**. Also attached to the handle **314** may be a grounding member **318**. The shaft **316** and the grounding member **318** may be attached to the handle **314**, such that one or both of the shaft **316** and the grounding member **318** may be moved relative to each other. In certain implementations, the grounding member **318** may be an external mold. The grounding probe **318** may be moved such that tissue to be treated is compressed between the grounding probe **318** and the electrode **312**. In certain implementations, the grounding probe **318** may be a needle. The device **310** may be connected to a remote generator, or may comprise a generator. A power button on the handle **316** may be used to activate and deactivate the electrodes.

[0169] FIG. **21**B illustrates the device **310** being used at an inferior turbinate. Specifically, the grounding member **318** pierces the tissue of the inferior turbinate and the bipolar electrodes **312** press against the tissue. When activated, current flows from one or more of the electrodes **312** to the grounding member **318**.

[0170] FIG. **22**A is a perspective view of a clamp-like device **320** for applying energy to the upper airway tissues using a bipolar electrode according to one embodiment. In certain implementations, the device **320** may comprise two prongs **322**, **324**. The prongs **322**, **324** may be flexible such that they move towards each other when compressed by an external force, and upon removal of this force, they spring back to their original positions. Bipolar electrodes **326** may be located at the end of prong **322** while prong **324** acts as an external positioning element. Prongs **322** and **324** may be moved such that tissue to be treated is compressed between the prong **324** and the electrode **326**. The device **320** may be connected to a remote generator, or the device may comprise a generator. A power button on one of the prongs **322**, **324** or the junction between both prongs **322**, **324** may be used to activate and deactivate the electrodes **326**.

[0171] FIG. **22**B is a perspective view of a one-prong device **328** for applying energy to the upper airway tissues using a monopolar electrode according to one embodiment. In certain implementations, the device **328** may comprise a single prong **330**. Monopolar electrodes **332** may be located at the end of the prong **330**. The prong **330** is inserted into the upper airway and electrodes **332** are placed on the tissue to be treated. A grounding pad **329** may be placed on the patient's body, usually the back. The device **328** may be connected to a remote generator, or it may comprise a generator, with a power button on the prong **330** that may be used to activate and deactivate the electrodes.

[0172] FIG. **23** is a perspective view of a device **334** with concave head for applying energy to the upper airway tissues using a bipolar electrode according to one embodiment. In certain implementations, the device **334** may comprise bipolar electrodes located at the end of a shaft **336**. The positive electrodes may be located on a concave surface **338** at the end of the shaft **336**. A grounding ring **340** may be formed around the rim of the concave surface **338**. The device **334** may be used to treat convex tissues with the tissues nestled within and compressed against the concave surface **338**. The device **334** may be connected to a remote generator, or the device **334** may comprise a generator. A power button on shaft **336** may be used to activate and deactivate the electrodes. In certain implementations, the device **334** may be formed with a dome shape and have current passing from a top region to a bottom region. This may enable a maximum surface area of current flow.

[0173] FIG. **24** is a perspective view of a device **340** with grounding probes, for applying energy to the upper airway tissues using a monopolar electrode according to one embodiment. In certain implementations, the device **340** may comprise monopolar electrodes **342** located at the end of a shaft **344**. The grounding probe **346** may be a needle or needles inserted into the tissue to be treated. The electrodes **342** may be compressed against the tissue to be treated. The device **340** may be connected to a remote generator, or it may comprise a generator, with a power button on shaft **344** that may be used to activate and deactivate the electrodes. It will be appreciated that any combination of electrode configurations, molds, handles, connection between handles, and the like may be used to treat the upper airway.

Profile of Treatment Element

[0174] The sizes and shapes of anatomies to be treated may vary at different treatment stages and also among different patients. To ensure best possible electrode-tissue contact, the treatment element **32** can be designed to be adjustable depending on the anatomy to be treated. Possible designs are mentioned below, it is also possible to have designs which are combinations of the ones mentioned. In certain implementations, the head may be designed with flexible wings, with electrodes of adjustable heights, and/or with one or more extensions.

[0175] FIG. **25** is a perspective view of a treatment device **400** with flexible wings according to one embodiment. Electrodes may be positioned on the interior or exterior or both. In the case of a convex anatomy, the wings can be adjusted to wrap around the targeted anatomy, using the electrodes on the

interior. In the case of a concave anatomy, the wings can be adjusted to fit into the anatomy, using the electrodes on the exterior.

[0176] In certain implementations, the device **400** may include a treatment element **401** positioned on a head section **402** of the device **400**, which may be configured to be placed inside the nasal cavity, nasal passage, nasal airway, and/or other anatomy to deliver the desired treatment. The treatment element **401** may be positioned on an interior portion **404** and/or an exterior portion **405** of the head section **402**. In some embodiments, the device **400** may further comprise a shaft section **403**, which may be sized and configured for easy handheld operation by a clinician. In some embodiments, the head section **402** may be adjustable. It may be advantageous to use an adjustable head section **402** to treat anatomy that may vary in shape and size. The shape of the head section **402** or parts of the head section **402** may be actively or passively adjusted to affect the engagement to the tissue or the effect on the tissue. In some embodiments, the adjustment of the head section **402** may result in a change in shape and/or size of the interior portion **404** and/or the exterior portion **405**.

[0177] The head section **402** may be implemented using flexible sections configured to be adjusted depending on the anatomy to be treated. Electrodes (not shown) may be positioned on the interior or the exterior of the flexible sections. In some embodiments, electrodes may be positioned on both the interior **404** and the exterior **405** of the flexible sections. For example, in the case of a convex anatomy, the flexible sections may be adjusted to wrap around the anatomy using electrodes on the interior **404** of the flexible sections. In the case of a concave anatomy, the flexible sections may be adjusted to fit into the anatomy using electrodes on the exterior **405** of the flexible sections. In some embodiments, the head section **402** may include functionality to inflate and deflate the flexible sections to adjust the size of a treatment surface of the device **400** in a radial direction. In some embodiments, the head section **402** may include functionality to rotate the head section **402** in any direction to allow the head section **402** to be angled in a desired position.

[0178] FIGS. **26**A-F are perspective views of embodiments of the treatment device **400** with an electrode array **410** having adjustable heights. In some implementations, one or more electrodes of the electrode array **410** may have adjustable heights. For example, each electrode may extend or retract to a preset height, achieving a combination which forms the required treatment surface profile. The surface profile may be in any combination of electrode heights.

[0179] In certain implementations, the electrode array **410** may include numerous electrodes positioned on a surface of a treatment element **401** of the device **400**. In some embodiments, the electrodes may be arranged in a grid pattern. The electrodes may be arranged in any pattern. One or more of the electrodes may be extended or retracted to a preset height. It may be advantageous to manipulate the heights of the electrodes of the electrode array **410** to achieve a combination that forms a required treatment surface profile **411**. The treatment surface profile **411** may include any combination of electrode numbers and heights. For example, the electrodes may be arranged and manipulated to achieve a generally concave treatment surface profile, a generally convex treatment surface profile (see, e.g., FIG. **26**F and FIG. **26**C), a generally flat treatment surface profile (See, e.g., FIG. **26**E and FIG. **26**B), and/or a generally concave treatment surface profile (see, e.g., FIG. **26**D and FIG. **26**A).

[0180] FIG. **27** is a perspective view of an embodiment of the treatment device **400** with an extendable component **422**. The expandable component **422** may be used to adjust the size of the treatment surface of the treatment device **400**. The extendable component **422** may be moved in any direction, not limited to the direction shown in FIG. **27**. The number of extendable components **422** need not be limited to one.

[0181] In certain implementations, an embodiment of a nasal valve treatment device **400**, comprising a first treatment element **401** and a second treatment element **421**. The first treatment element **401** may be positioned on a first side of a head section **402**. The first treatment element **401** may include a first electrode array **410**. In some embodiments, the head section **402** may be implemented with an extendable component **422**. It may be advantageous to provide an extendable component **422** to allow the size of the treatment surface **423** to be adjustable. The extendable component **422** may include a second treatment element **421**, including a second electrode array **420**. In some embodiments, the extendable component **422** may be positioned on a second side of the head section **402** such that it is behind the first treatment element **401**. The extendable component **422** may include functionality to move such that it may be shifted from behind the first treatment element **401** of the head section **402** to adjacent to the first treatment element **401** of the head section **402**. This shift may expose the second electrode array **420**, thereby extending the treatment surface **423**. The extendable component **422** may be moved in any direction, and the direction depicted in FIG. **27** is merely an example of one direction in which it may be moved. All adjustments can be applied before and also during treatments so as to cater to anatomy changes during treatments.

[0182] FIGS. **28**A-E are side-cutaway views of treatment elements according to certain embodiments. The treatment elements may be configured to maintain different temperatures in adjacent tissues. Differential cooling mechanisms may be applied to a cross-section of tissue.

[0183] As shown in FIG. **28**A, in some embodiments, the differential cooling mechanism comprises two elements: a first element **708** and a second element **710**. The two elements are on either side of the thickness of the nasal tissue. In one embodiment, the mechanism is configured to maintain normal temperatures in the cartilage **704** while cooling the mucosa **702** and the skin **706**. In such an embodiment, the first and second elements **708**, **710** comprise a cooling apparatus such as those described above (e.g., heat sink, coolant lines, etc.). In some embodiments, the mucosa **702** and the skin **706** are heated while normal temperatures are maintained in the cartilaginous middle layer **704**. The cartilage **704** may be somewhat warmed, in such embodiments, but may be cooler than the mucosa **702** and the skin **706**. In such embodiments, the first and second elements **708**, **710** comprise a heating apparatus, such as radio frequency electrodes or resistive heating elements. Depending on the treatment target, the temperature of different layers or regions of tissue may be controlled. For example, in some embodiments, the mucosa **702** is heated, the skin **706** is cooled, and normal temperatures are maintained in the cartilage **704**. In such embodiments, the first element **708** comprises a heating apparatus and the second element **710** comprises a cooling apparatus. As another example, in some embodiments, the skin **706** is heated, the mucosa **702** is cooled, and normal temperatures are maintained in the cartilage **704**. In such embodiments, the first element **708** comprises a cooling apparatus and the second

element **710** comprises a heating apparatus. As another example, submucosa and associated cells are heated while normal temperatures are maintained elsewhere.

[0184] FIG. **28**B shows an example of one of the embodiments described with respect to FIG. **28**A. The first element **730** is on the mucosal surface **702**. The second element **732** is an energy delivery element and is positioned on the skin side **706** of the tissue thickness. The first element **730** comprises a cooling apparatus and the second element **732** comprises an energy delivery element (e.g., an RF electrode). The mucosal layer **702** is cooled while the skin **706** and cartilaginous areas **704** are heated. In other embodiments, the first element **730** can be positioned on the skin **706** and the second element **732** can be positioned on the mucosa **702**. In such embodiments, the skin **706** is cooled while the mucosa **702** and the cartilage **704** are heated.

[0185] As shown in FIG. **28**C, in some embodiments, the differential cooling mechanism comprises a first element **720** and a second element **722**. Both elements **720**, **722** are on the mucosa **702** side of the tissue thickness. In some embodiments, the mucosal layer **702** is cooled while higher temperatures are maintained in the middle cartilaginous layer **704**. In such embodiments, the first element **720** comprises a cooling apparatus, and the second element **722** comprises an energy delivery apparatus (e.g., a monopolar radiofrequency electrode). In some embodiments, the first element **720** is sufficiently efficient to maintain cool temperatures at the mucosa **702** despite the energy provided by the second element **722**. In other embodiments, the first and second elements **720**, **722** are both positioned on the skin side **706** of the tissue thickness. In such embodiments, the skin **706** is cooled while higher temperatures are maintained in the middle cartilaginous layer.

[0186] As shown in FIG. **28**D, in some embodiments, the differential cooling mechanism comprises a first surface element **740** and a second surface element **742** on either side of the tissue thickness. A third subsurface element **744** is engaged through the mucosa **702** and into the cartilage area **704**. In some embodiments, the mucosa **702** and the skin **706** are cooled while the middle cartilaginous layer **704** is heated. In such embodiments, the first and second elements **740**, **742** comprise cooling apparatus while the third element **744** comprises a heating element (e.g., RF monopolar electrode, RF bipolar needles, etc.). In other embodiments, the third subsurface element **744** may be engaged through the skin **706** and into the cartilage area **704**.

[0187] As shown in FIG. **28**E, in some embodiments, the differential cooling mechanism comprises a first surface element **750** and a second surface element **752** on either side of the tissue thickness. The differential cooling mechanism further comprises a third surface element **754** and a fourth surface element **756** on either side of the tissue thickness. In some embodiments, the cartilage layer **704** is heated while the mucosa **702** and the skin **706** are cooled. In such embodiments, the first and second elements **750**, **752** comprise cooling apparatus and the third and fourth elements **754**, **756** comprise energy delivery apparatuses (e.g., bipolar plate electrodes). In some embodiments, the cartilage **704** and mucosal **702** layers are heated while the skin **706** is cooled. In such embodiments, the first element **750** comprises a heating apparatus; the second element **752** comprises a cooling apparatus; and the third and fourth elements **754**, **756** comprise energy delivery apparatuses. It will be appreciated that different differential temperature effects can be achieved by reconfiguring and adding or subtracting to the described configuration of elements.

[0188] FIGS. **29**A-B illustrate certain implementations of a system for treating a nasal airway including one or more sensors. Such sensors may be used to sense any of a number of relevant tissue properties, such as temperature, impedance and the like. The sensors may be located on a treatment device in some embodiments, or alternatively they may be separate from the treatment device and positioned at or near the device during treatment. In some embodiments, the sensor(s) may provide feedback directly to the treatment device. For example if a particular tissue temperature threshold is reached, a sensor (or sensors) may send a signal to a power generator to shut down or decrease power delivered to a treatment device. In alternative embodiment, the sensor(s) may instead provide feedback to a physician or other user, so that the physician or other user can make treatment adjustments. For example, sensors may provide a warning signal when a particular tissue temperature or impedance is reached, which will help a physician know when to turn off or decrease power delivery to a treatment device. Additionally, sensor(s) may be used to sense one or more tissue properties in any suitable tissue or multiple tissues, such as but not limited to mucosa, cartilage, dermis, epidermis and other types of body soft tissue.

[0189] FIG. **29**A is a side-cutaway view of nasal skin in cross section, including mucosa, cartilage, dermis and epidermis and a treatment device having an external component according to one embodiment. In certain implementations, a sensor device **920** may include an epidermal sensor **922** that is coupled to the epidermis via an adhesive **924**. Any suitable sensor **922** (temperature, impedance, etc.) and any suitable adhesive **924** may be used. This embodiment of the sensor device **920** is also illustrated on a patient's face in FIG. **29**B.

[0190] In an alternative embodiment, a sensor device **930** may include a transdermal needle sensor **932**. In another alternative embodiment, a sensor device **942** may be attached directly to a treatment device **940**. As illustrated by these various embodiments, sensors **922**, **932** and **942** may be positioned either at or near a treatment location during a treatment. In some embodiments, for example, a sensor **922**, **932** may be placed on or in epidermis while a treatment is being performed on mucosa. Alternatively, a sensor **942** may be placed directly on mucosa during a treatment of mucosa. Additionally, in any given embodiment, multiple sensors may be placed at multiple different locations in and/or on tissue. As mentioned above, the sensor devices **920**, **930** and **940** may, in various embodiments, provide any of a number of different types of feedback, such as feedback to a user, feedback to a power generator, or both.

[0191] Although this invention has been disclosed in the context of certain preferred embodiments and examples, it will be understood by those skilled in the art that the present invention extends beyond the specifically disclosed embodiments to other alternative embodiments and/or uses of the invention and obvious modifications and equivalents thereof. Thus, it is intended that the scope of the present invention herein disclosed should not be limited by the particular disclosed embodiments described above, but should be determined only by a fair reading of the claims that follow.

What is claimed is:

1. A method for reducing mucus secretion in an upper airway of a patient to treat at least one of post nasal drip or chronic cough, the method comprising:

advancing a treatment delivery portion of an energy-based treatment device into a nostril of the patient;

contacting mucosal tissue of the upper airway with the treatment delivery portion, without piercing the mucosal tissue; and

delivering a treatment from the treatment delivery portion to at least one tissue selected from the group of the mucosal tissue and another tissue underlying the mucosal tissue to modify a property of the at least one tissue and thus treat at least one of post nasal drip or chronic cough in the patient.

2. The method of claim **1**, wherein the treatment is delivered without forming an incision in the mucosal tissue and without delivering an implant.

3. The method of claim **1**, wherein delivering the treatment comprises delivering energy from the delivery treatment portion in a form selected from the group consisting of ultrasound, microwave, heat, radiofrequency, electrical, light and laser energy.

4. The method of claim **3**, wherein delivering the treatment comprises delivering radiofrequency energy from a first electrode on a tissue contact surface of the treatment portion across a convex portion of the tissue contact surface to a second electrode on the tissue contact surface.

5. The method of claim **4**, wherein contacting the mucosal tissue comprises contacting multiple non-piercing bumps on the tissue contact surface with the mucosal tissue.

6. The method of claim **3**, wherein the at least one tissue comprises nerve tissue underlying the mucosal tissue, and wherein delivering the energy comprises ablating the nerve tissue.

7. The method of claim **3**, further comprising measuring an amount of delivered energy using a thermocouple on the treatment portion.

8. The method of claim **7**, further comprising adjusting the amount of delivered energy by adjusting a setting of the treatment delivery portion.

9. The method of claim **1**, wherein delivering the treatment comprises removing energy, and wherein the treatment delivery portion comprises a cryotherapy device.

10. The method of claim **9**, wherein the at least one tissue comprises nerve tissue underlying the mucosal tissue, and wherein removing energy comprises ablating the nerve tissue using the cryotherapy device.

11. The method of claim **1**, wherein applying a treatment comprises injecting a polymerizing liquid.

12. The method of claim **1**, wherein delivering the treatment comprises injuring the at least one tissue.

13. The method of claim **12**, wherein delivering the treatment comprises injuring goblet cells that are part of the mucosal tissue.

14. The method of claim **12**, wherein the at least one tissues is selected from the group consisting of cilia, goblet cells, nerves, submucosal tissue, muscle, ligaments, cartilage, tendon, and skin.

15. The method of claim **1**, wherein delivering the treatment comprises simultaneously mechanically altering the mucosal tissue and delivering energy to the at least one tissue.

16. The method of claim **1**, wherein delivering the treatment comprises modifying the at least one tissue in a manner that decreases a volumetric rate of mucus production of the mucosal tissue without changing a shape of the mucosal tissue.

17. The method of claim **1**, wherein delivering the treatment comprises delivering a cauterizing agent to tissue to be treated.

18. The method of claim **1**, wherein delivering the treatment comprises delivering the treatment to at least one turbinate of the upper airway.

19. The method of claim **18**, wherein the at least one turbinate comprises an inferior turbinate, and contacting the mucosal tissue comprises contacting a posterior aspect of the inferior turbinate.

20. A device for reducing mucus secretion in an upper airway of a patient to treat at least one of post nasal drip or chronic cough, the device comprising:

an elongate, malleable shaft having a proximal end and a distal end;

a handle at the proximal end of the elongate shaft; and

a treatment portion at the distal end of the elongate shaft, the treatment portion comprising a treatment surface, the treatment surface comprising:

at least two energy delivery members extending longitudinally along the treatment surface; and

a concave trough extending longitudinally along the treatment surface and separating the at least two energy delivery members.

21. The device of claim **20**, wherein the at least two energy delivery members comprise at least one positive electrode on one side of the concave trough and at least one negative electrode on an opposite side of the concave trough.

22. The device of claim **21**, wherein the at least one positive electrode comprises a row of positive electrodes, and wherein the at least on negative electrode comprises a row of negative electrodes.

23. The device of claim **22**, wherein the electrodes protrude from the treatment surface.

24. The device of claim **23**, wherein the electrodes are blunt-tipped electrodes.

25. The device of claim **20**, further comprising a thermocouple disposed within the concave trough.

26. A method for reducing mucus secretion in an upper airway of a patient to treat at least one of post nasal drip or chronic cough, the method comprising:

bending a malleable shaft of a treatment device into a desired configuration;

advancing a treatment portion of the treatment device into a nostril of the patient to contact a treatment surface of the treatment portion with mucosal tissue of the upper airway, without piercing the mucosal tissue;

delivering radiofrequency energy from a first electrode on the treatment surface across a concave trough in the treatment surface to a second electrode on the treatment surface, to treat at least one tissue selected from the group of the mucosal tissue and another tissue underlying the mucosal tissue to modify a property of the at least one tissue and thus treat at least one of post nasal drip or chronic cough in the patient;

measuring an amount of the radiofrequency energy delivered, using a thermocouple disposed in the concave trough; and

removing the treatment portion from the upper airway without leaving an implant in the upper airway.

27. The method of claim **26**, further comprising performing a test to determine whether a desired contact between the treatment surface and the mucosal tissue has been achieved.

28. The method of claim **26**, wherein the delivering and measuring steps comprise:

delivering a first amount of the radiofrequency energy from the first electrode to the second electrode;

measuring a temperature of the mucosal tissue using the thermocouple; and

delivering a second amount of the radiofrequency energy from the first electrode to the second electrode, wherein the second amount of radiofrequency energy is based at least in part on the measured temperature.

29. The method of claim **26**, wherein the mucosal tissue comprises tissue located on at least one nasal turbinate of the upper airway.

30. The method of claim **29**, wherein the mucosal tissue comprises tissue located on a posterior aspect of an inferior turbinate.

31. The method of claim **26**, wherein delivering the radiofrequency energy comprises delivering the radiofrequency energy in an amount that deactivates mucus producing cells by impairing at least one of mucus production ability or cell differentiation ability of the mucus producing cells.

32. The method of claim **26**, wherein delivering the radiofrequency energy comprises delivering the radiofrequency energy in an amount that causes one or more mucus paths of the upper airway to divert.

33. The method of claim **26**, further comprising repeating the bending, advancing, and delivery steps.

* * * * *