UNITED STATES PATENT AND TRADEMARK OFFICE

UNITED STATES DEPARTMENT OF COMMERCE
United States Patent and Trademark Office
Address: COMMISSIONER FOR PATENTS
P.O. Box 1450
Alexandria, Virginia 22313-1450
www.uspto.gov

APPLICATION NO.	FILING DATE	FIRST NAMED INVENTOR	ATTORNEY DOCKET NO.	CONFIRMATION NO.
18/647,755	04/26/2024	David Townley	NEURE-008/08US 35242/160	9306

21710 7590 09/17/2024
BROWN RUDNICK LLP
ONE FINANCIAL CENTER
BOSTON, MA 02111

EXAMINER
BOCK, ABIGAIL MARIE

ART UNIT	PAPER NUMBER
3794	

NOTIFICATION DATE	DELIVERY MODE
09/17/2024	ELECTRONIC

Please find below and/or attached an Office communication concerning this application or proceeding.

The time period for reply, if any, is set in the attached communication.

Notice of the Office communication was sent electronically on above-indicated "Notification Date" to the following e-mail address(es):

ip@brownrudnick.com
usactions@brownrudnick.com

PTOL-90A (Rev. 04/07)

APPLICATION NO.	ISSUE DATE	PATENT NO.
18/647,755	17-Sep-2024	12089889

BROWN RUDNICK LLP
ONE FINANCIAL CENTER
BOSTON, MA 02111

EGRANT NOTIFICATION

Your electronic patent grant (eGrant) is now available, which can be accessed via Patent Center at https://patentcenter.uspto.gov

The electronic patent grant is the official patent grant under 35 U.S.C. 153. For more information, please visit https://www.uspto.gov/electronicgrants

UNITED STATES
PATENT AND TRADEMARK OFFICE

P.O. Box 1450
Alexandria, VA 22313 - 1450
www.uspto.gov

ELECTRONIC ACKNOWLEDGEMENT RECEIPT

APPLICATION #	RECEIPT DATE / TIME	ATTORNEY DOCKET #
18/647,755	**08/28/2024 03:21:52 PM Z ET**	**NEURE-008/08US 35242/160**

Title of Invention

SYSTEMS AND METHODS FOR THERAPEUTIC NASAL TREATMENT USING HANDHELD DEVICE

Application Information

APPLICATION TYPE	Utility - Nonprovisional Application under 35 USC 111(a)	PATENT #	12089889
CONFIRMATION #	9306	FILED BY	Matthew York
PATENT CENTER #	66962887	FILING DATE	04/26/2024
CUSTOMER #	21710	FIRST NAMED INVENTOR	David Townley
CORRESPONDENCE ADDRESS	-	AUTHORIZED BY	-

Documents

TOTAL DOCUMENTS: 1

DOCUMENT	PAGES	DESCRIPTION	SIZE (KB)
NEURE-008-08US_Misc_Paper.pdf	1	Miscellaneous Incoming Letter	93 KB

Digest

DOCUMENT	MESSAGE DIGEST(SHA-512)
NEURE-008-08US_Misc_Paper.pdf	0E62D35B8FB22CBFDEAD97E1D7F96F6025B16BA698A14041FE6DE246516C8DBE4D284B572CBCC4D5C7FCA2038B12D3519B22C47D0F8B32C0BE63815755CAE70F

This Acknowledgement Receipt evidences receipt on the noted date by the USPTO of the indicated documents, characterized by the applicant, and including page counts, where applicable. It serves as evidence of receipt similar to a Post Card, as described in MPEP 503.

New Applications Under 35 U.S.C. 111

If a new application is being filed and the application includes the necessary components for filing date (see 37 CFR 1.53(b)-(d) and MPEP 506), a Filing Receipt (37 CFR 1.54) will be issued in due course and the date shown on this Acknowledgement Receipt will establish the filing date of the application

National Stage of an International Application under 35 U.S.C. 371

If a timely submission to enter the national stage of an international application is compliant with the conditions of 35 U.S.C. 371 and other applicable requirements a Form PCT/DO/EO/903 indicating acceptance of the application as a national stage submission under 35 U.S.C. 371 will be issued in addition to the Filing Receipt, in due course.

New International Application Filed with the USPTO as a Receiving Office

If a new international application is being filed and the international application includes the necessary components for an international filing date (see PCT Article 11 and MPEP 1810), a Notification of the International Application Number and of the International Filing Date (Form PCT/RO/105) will be issued in due course, subject to prescriptions concerning national security, and the date shown on this Acknowledgement Receipt will establish the international filing date of the application.

IN THE UNITED STATES PATENT AND TRADEMARK OFFICE

APPLICANT:	Neurent Medical Limited	ART UNIT:	3794
SERIAL NUMBER:	18/647,755	CONF. NO.:	9306
FILING DATE:	April 26, 2024	EXAMINER:	Bock, Abigail Marie
TITLE:	SYSTEMS AND METHODS FOR THERAPEUTIC NASAL TREATMENT USING HANDHELD DEVICE		

FILED ELECTRONICALLY

Commissioner for Patents
P. O. Box 1450
Alexandria, VA 22313-1450

MISCELLANEOUS PAPER

Applicant notes that, *In Aerin Medical Inc. et al v. Neurent Medical Inc. et al*, DDE-1-23-cv-00756, Neurent Medical Inc. asserts that claims of related Patent No. 11,998,262 are infringed by the use of Aerin's RhinAer® System, including at least the Stylus Model FG1393 and Console Model FG226 ("RhinAer System") for improving a patient's sleep by treating at least one of rhinitis, congestion, and rhinorrhea within a sino-nasal cavity of a patient. On August 5, Aerin Medical Inc. moved to Dismiss the patent from the case. (DDE-1-23-cv-00756, DI 089-091.).

If there are any questions regarding this paper, the Examiner is invited and encouraged to contact Applicant's undersigned representative.

Dated: August 28, 2024

Respectfully submitted,
BROWN RUDNICK LLP

BROWN RUDNICK LLP
One Financial Center
Boston, MA 02111
Tel: (617) 856-8200
Fax: (617) 856-8201

/Matthew P. York/
Matthew P. York, Reg. No. 66,470
Attorney for Applicant
Email: myork@brownrudnick.com

65426941 v1

UNITED STATES PATENT AND TRADEMARK OFFICE

UNITED STATES DEPARTMENT OF COMMERCE
United States Patent and Trademark Office
Address: COMMISSIONER FOR PATENTS
P.O. Box 1450
Alexandria, Virginia 22313-1450
www.uspto.gov

APPLICATION NO.	ISSUE DATE	PATENT NO.	ATTORNEY DOCKET NO.	CONFIRMATION NO.
18/647,755	09/17/2024	12089889	NEURE-008/08US 35242/160	9306

21710 7590 08/28/2024
BROWN RUDNICK LLP
ONE FINANCIAL CENTER
BOSTON, MA 02111

ISSUE NOTIFICATION

The projected patent number and issue date are specified above. The patent will issue electronically. The electronically issued patent is the official patent grant pursuant to 35 U.S.C. § 153. The patent may be accessed on or after the issue date through Patent Center at https://patentcenter.uspto.gov/. The patent will be available in both the public and the private sides of Patent Center. Further assistance in electronically accessing the patent, or about Patent Center, is available by calling the Patent Electronic Business Center at 1-888-217-9197.

The USPTO is implementing electronic patent issuance with a transition period, during which period the USPTO will mail a ceremonial paper copy of the electronic patent grant to the correspondence address of record. Additional copies of the patent (i.e., certified and presentation copies) may be ordered for a fee from the USPTO's Certified Copy Center at https://certifiedcopycenter.uspto.gov/index.html. The Certified Copy Center may be reached at (800)972-6382.

Determination of Patent Term Adjustment under 35 U.S.C. 154 (b)
(application filed on or after May 29, 2000)

The Patent Term Adjustment is 0 day(s). Any patent to issue from the above-identified application will include an indication of the adjustment on the front page.

If a Continued Prosecution Application (CPA) was filed in the above-identified application, the filing date that determines Patent Term Adjustment is the filing date of the most recent CPA.

Applicant will be able to obtain more detailed information by accessing the Patent Center (https://patentcenter.uspto.gov).

Any questions regarding the Patent Term Extension or Adjustment determination should be directed to the Office of Patent Legal Administration at (571)-272-7702. Questions relating to issue and publication fee payments should be directed to the Application Assistance Unit (AAU) of the Office of Patents Stakeholder Experience (OPSE), Stakeholder Support Division (SSD) at (571)-272-4200.

INVENTOR(s) (Please see PATENT CENTER site https://patentcenter.uspto.gov for additional inventors):

David Townley, County Clare, IRELAND;

APPLICANT(s) (Please see PATENT CENTER site https://patentcenter.uspto.gov for additional applicants):

Neurent Medical Limited, Oranmore, IRELAND;

The United States represents the largest, most dynamic marketplace in the world and is an unparalleled location for business investment, innovation, and commercialization of new technologies. The USA offers tremendous resources and advantages for those who invest and manufacture goods here. Through SelectUSA, our nation works to encourage and facilitate business investment. To learn more about why the USA is the best country in the world to develop technology, manufacture products, and grow your business, visit SelectUSA.gov.

INFORMATION DISCLOSURE STATEMENT BY APPLICANT (Not for submission under 37 CFR 1.99)		
	Application Number	18647755
	Filing Date	2024-04-26
	First Named Inventor	David Townley
	Art Unit	N/A
	Examiner Name	Not Yet Assigned
	Attorney Docket Number	NEURE-008/08US 35242/160

	50	20120078377	A1	2012-03-29	Gonzales et al.	
	51	20120191003		2012-07-26	Robert Garabedian	
	52	20120259326	A1	2012-10-11	Brannan et al.	
	53	20120323214	A1	2012-12-20	Shantha	
	54	20120323227	A1	2012-12-20	Wolf et al.	
	55	20120323232	A1	2012-12-20	Wolf et al.	
	56	20130018367	A1	2013-01-17	Wu et al.	
	57	20130123778	A1	2013-05-16	RICHARDSON et al.	
	58	20130158475	A1	2013-06-20	Xia et al.	
	59	20130165916	A1	2013-06-27	MATHUR et al.	
	60	20130172877		2013-07-04	~~Boston Scientific Scimed~~, Inc.	Subramaniam et al.

Change(s) applied to document, /M.D./ 8/14/2024

ALL REFERENCES CONSIDERED EXCEPT WHERE LINED THROUGH. /A.M.B./

UNITED STATES PATENT AND TRADEMARK OFFICE

UNITED STATES DEPARTMENT OF COMMERCE
United States Patent and Trademark Office
Address: COMMISSIONER FOR PATENTS
P.O. Box 1450
Alexandria, Virginia 22313-1450
www.uspto.gov

APPLICATION NUMBER	FILING OR 371(C) DATE	FIRST NAMED APPLICANT	ATTY. DOCKET NO./TITLE
18/647,755	04/26/2024	David Townley	NEURE-008/08US 35242/160

CONFIRMATION NO. 9306

21710
BROWN RUDNICK LLP
ONE FINANCIAL CENTER
BOSTON, MA 02111

PUBLICATION NOTICE

"OC100000076569693"

Date Mailed: 08/15/2024

Title:SYSTEMS AND METHODS FOR THERAPEUTIC NASAL TREATMENT USING HANDHELD DEVICE

Publication No.US-2024-0268883-A1
Publication Date:08/15/2024

NOTICE OF PUBLICATION OF APPLICATION

The above-identified application will be electronically published as a patent application publication pursuant to 37 CFR 1.211, et seq. The patent application publication number and publication date are set forth above.

The publication may be viewed using the USPTO's publicly available Searchable Databases via the Patent Public Search tool at www.uspto.gov. The direct link to access the Patent Public Search tool is currently https://ppubs.uspto.gov/pubwebapp/static/pages/ppubsbasic.html.

The publication process established by the Office does not provide for mailing a copy of the publication to applicant. A copy of the publication may be obtained from the Office upon payment of the appropriate fee set forth in 37 CFR 1.19(a)(1). Orders for copies of patent application publications are handled by the USPTO's Public Records Division. The Public Records Division can be reached by telephone at (571) 272-3150 or (800) 972-6382, by facsimile at (571) 273-3250, by mail addressed to the United States Patent and Trademark Office, Public Records Division, Alexandria, VA 22313-1450 or via the Internet.

In addition, information on the status of the application, including the mailing date of Office actions and the dates of receipt of correspondence filed in the Office, may also be accessed via the Internet through Patent Center, the USPTO's electronic patent application filing and management system. The direct link to access this status information is currently https://patentcenter.uspto.gov/. Prior to publication, such status information is confidential and may only be obtained by applicant using the private side of Patent Center.

Further assistance in electronically accessing the publication, or about Patent Center, is available by calling the Patent Electronic Business Center at 1-866-217-9197.

Office of Data Managment, Application Assistance Unit (571) 272-4000, or (571) 272-4200, or 1-888-786-0101

UNITED STATES
PATENT AND TRADEMARK OFFICE

P.O. Box 1450
Alexandria, VA 22313 - 1450
www.uspto.gov

ELECTRONIC ACKNOWLEDGEMENT RECEIPT

APPLICATION #	RECEIPT DATE / TIME	ATTORNEY DOCKET #
18/647,755	**07/18/2024 03:54:57 PM Z ET**	**NEURE-008/08US 35242/160**

Title of Invention

SYSTEMS AND METHODS FOR THERAPEUTIC NASAL TREATMENT USING HANDHELD DEVICE

Application Information

APPLICATION TYPE	Utility - Nonprovisional Application under 35 USC 111(a)	PATENT #	-
CONFIRMATION #	9306	FILED BY	Michelle Aiello
PATENT CENTER #	66424493	FILING DATE	04/26/2024
CUSTOMER #	21710	FIRST NAMED INVENTOR	David Townley
CORRESPONDENCE ADDRESS	-	AUTHORIZED BY	Adam Schoen

Documents

TOTAL DOCUMENTS: 1

DOCUMENT	PAGES	DESCRIPTION	SIZE (KB)
35242_160US - NEURE-008-08US_Issue_Fee_Transmittal.pdf	1	Issue Fee Payment (PTO-85B)	139 KB

Digest

DOCUMENT	MESSAGE DIGEST(SHA-512)
35242_160US - NEURE-008-08US_Issue_Fee_Transmittal.pdf	C48602895FF8CE11D82C0949ED87656669DB86C0C81421A86FF939F5562890F6470AD3A923AF54D1435674FB5423CC752828E6E7B242661B7CCC51815EBA8C12

This Acknowledgement Receipt evidences receipt on the noted date by the USPTO of the indicated documents, characterized by the applicant, and including page counts, where applicable. It serves as evidence of receipt similar to a Post Card, as described in MPEP 503.

New Applications Under 35 U.S.C. 111

If a new application is being filed and the application includes the necessary components for filing date (see 37 CFR 1.53(b)-(d) and MPEP 506), a Filing Receipt (37 CFR 1.54) will be issued in due course and the date shown on this Acknowledgement Receipt will establish the filing date of the application

National Stage of an International Application under 35 U.S.C. 371

If a timely submission to enter the national stage of an international application is compliant with the conditions of 35 U.S.C. 371 and other applicable requirements a Form PCT/DO/EO/903 indicating acceptance of the application as a national stage submission under 35 U.S.C. 371 will be issued in addition to the Filing Receipt, in due course.

New International Application Filed with the USPTO as a Receiving Office

If a new international application is being filed and the international application includes the necessary components for an international filing date (see PCT Article 11 and MPEP 1810), a Notification of the International Application Number and of the International Filing Date (Form PCT/RO/105) will be issued in due course, subject to prescriptions concerning national security, and the date shown on this Acknowledgement Receipt will establish the international filing date of the application.

UNITED STATES
PATENT AND TRADEMARK OFFICE

P.O. Box 1450
Alexandria, VA 22313 - 1450
www.uspto.gov

ELECTRONIC PAYMENT RECEIPT

APPLICATION #	RECEIPT DATE / TIME	ATTORNEY DOCKET #
18/647,755	07/18/2024 03:54:57 PM Z ET	NEURE-008/08US 35242/160

Title of Invention

SYSTEMS AND METHODS FOR THERAPEUTIC NASAL TREATMENT USING HANDHELD DEVICE

Application Information

APPLICATION TYPE	Utility - Nonprovisional Application under 35 USC 111(a)	PATENT #	-
CONFIRMATION #	9306	FILED BY	Michelle Aiello
PATENT CENTER #	66424493	AUTHORIZED BY	Adam Schoen
CUSTOMER #	21710	FILING DATE	04/26/2024
CORRESPONDENCE ADDRESS	-	FIRST NAMED INVENTOR	David Townley

Payment Information

PAYMENT METHOD	PAYMENT TRANSACTION ID	PAYMENT AUTHORIZED BY
DA / 500369	E20247HF56068602	Michelle Aiello

FEE CODE	DESCRIPTION	ITEM PRICE($)	QUANTITY	ITEM TOTAL($)
2501	UTILITY ISSUE FEE	480.00	1	480.00
			TOTAL AMOUNT:	$480.00

This Acknowledgement Receipt evidences receipt on the noted date by the USPTO of the indicated documents, characterized by the applicant, and including page counts, where applicable. It serves as evidence of receipt similar to a Post Card, as described in MPEP 503.

New Applications Under 35 U.S.C. 111

If a new application is being filed and the application includes the necessary components for filing date (see 37 CFR 1.53(b)-(d) and MPEP 506), a Filing Receipt (37 CFR 1.54) will be issued in due course and the date shown on this Acknowledgement Receipt will establish the filing date of the application

National Stage of an International Application under 35 U.S.C. 371

If a timely submission to enter the national stage of an international application is compliant with the conditions of 35 U.S.C. 371 and other applicable requirements a Form PCT/DO/EO/903 indicating acceptance of the application as a national stage

submission under 35 U.S.C. 371 will be issued in addition to the Filing Receipt, in due course.

New International Application Filed with the USPTO as a Receiving Office

If a new international application is being filed and the international application includes the necessary components for an international filing date (see PCT Article 11 and MPEP 1810), a Notification of the International Application Number and of the International Filing Date (Form PCT/RO/105) will be issued in due course, subject to prescriptions concerning national security, and the date shown on this Acknowledgement Receipt will establish the international filing date of the application.

PART B–FEE(S) TRANSMITTAL

Complete and send this form, together with the applicable fee(s), by mail or fax, or via the USPTO patent electronic filing system.

By mail, send to: Mail Stop ISSUE FEE
Commissioner for Patents
P.O. Box 1450
Alexandria, VA 22313-1450

By fax, send to: (571) 273-2885

INSTRUCTIONS: This form should be used for transmitting the ISSUE FEE and PUBLICATION FEE (if required). Blocks 1 through 5 should be completed where appropriate. All further correspondence will be mailed to the current correspondence address as indicated unless corrected below or directed otherwise in Block 1, by (a) specifying a new correspondence address; and/or (b) indicating a separate "FEE ADDRESS" for maintenance fee notifications. **Because electronic patent issuance may occur shortly after issue fee payment, any desired continuing application should preferably be filed prior to payment of this issue fee in order not to jeopardize copendency.**

CURRENT CORRESPONDENCE ADDRESS (Note: Use Block 1 for any change of address)

Brown Rudnick LLP
One Financial Center
Boston, Massachusetts 02111

Note: A certificate of mailing can only be used for domestic mailings of the Fee(s) Transmittal. This certificate cannot be used for any other accompanying papers. Each additional paper, such as an assignment or formal drawing, must have its own certificate of mailing or transmission.

Certificate of Mailing or Transmission

I hereby certify that this Fee(s) Transmittal is being deposited with the United States Postal Service with sufficient postage for first class mail in an envelope addressed to the Mail Stop ISSUE FEE address above, or being transmitted to the USPTO via the USPTO patent electronic filing system or by facsimile to (571) 273-2885, on the date below.

Michelle Aiello	(Typed or printed name)
/Michelle Aiello/	(Signature)
July 18, 2024	(Date)

APPLICATION NO	FILING DATE	FIRST NAMED INVENTOR	ATTORNEY DOCKET NO	CONFIRMATION NO
18/647,755	04/26/2024	David Townley	NEURE-008/08US 35242/160	9306

TITLE OF INVENTION: SYSTEMS AND METHODS FOR THERAPEUTIC NASAL TREATMENT USING HANDHELD DEVICE

APPLN: TYPE	ENTITY STATUS	ISSUE FEE DUE	PUBLICATION FEE DUE	PREV. PAID ISSUE FEE	TOTAL FEE(S) DUE	DATE DUE
nonprovisional	SMALL	$480.00	$0.00	$0.00	$480.00	10/18/2024

EXAMINER	ART UNIT	CLASS-SUBCLASS
A. M. Bock	3794	606-041000

1. Change of correspondence address or indication of "Fee Address" (37 CFR 1.363)

☐ Change of correspondence address (or Change of Correspondence Address form PTO/SB/122) attached.

☐ "Fee Address" indication (or "Fee Address" Indication form PTO/AIA/47 or PTO/SB/47; Rev 03-09 or more recent) attached. **Use of a Customer Number is required.**

2. For printing on the patent front page, list

(1) The names of up to 3 registered patent attorneys or agents OR, alternatively,

(2) The name of a single firm (having as a member a registered attorney or agent) and the names of up to 2 registered patent attorneys or agents. If no name is listed, no name will be printed.

1. Brown Rudnick LLP
2. Adam M. Schoen
3.

3. ASSIGNEE NAME AND RESIDENCE DATA TO BE PRINTED ON THE PATENT (print or type)

PLEASE NOTE: Unless an assignee is identified below, no assignee data will appear on the patent. If an assignee is identified below, the document must have been previously recorded, or filed for recordation, as set forth in 37 CFR 3.11 and 37 CFR 3.81(a). Completion of this form is NOT a substitute for filing an assignment.

(A) NAME OF ASSIGNEE: Neurent Medical Limited

(B) RESIDENCE: (CITY and STATE or COUNTRY): Oranmore, Galway, Ireland

Please check the appropriate assignee category or categories (will not be printed on the patent): ☐ Individual ☒ Corporation or other private group entity ☐ Government

4a. Fees Submitted: ☒ Issue Fee ☐ Publication Fee (if required)

4b. Method of Payment (*Please first reapply any previously paid fee shown above*):

☒ Electronic Payment via the USPTO patent electronic filing system ☐ Enclosed check ☐ Non-electronic payment by credit card (Attach form PTO-2038)

☒ The Director is hereby authorized to charge the required fee(s), any deficiency, or credit any overpayment to Deposit Account No. 50-0369

5. Change of Entity Status (from status indicated above)

☐ Applicant certifying micro entity status. See 37 CFR 1.29. NOTE: Absent a valid Certification of Micro Entity Status (see forms PTO/SB/15A and 15B), issue fee payment in the micro entity amount will not be accepted at the risk of application abandonment.

☐ Applicant asserting small entity status. See 37 CFR 1.27. NOTE: If the application was previously under micro entity status, checking this box will be taken as a notification of loss of entitlement to micro entity status.

☐ Applicant changing to regular undiscounted fee status. NOTE: Checking this box will be taken as a notification of loss of entitlement to small or micro entity status, as applicable.

NOTE: This form must be signed in accordance with 37 CFR 1.31 and 1.33. See 37 CFR 1.4 for signature requirements and certifications.

Authorized Signature /Adam M. Schoen/ Date July 18, 2024

Typed or printed name Adam M. Schoen Registration No. 58,576

UNITED STATES PATENT AND TRADEMARK OFFICE

UNITED STATES DEPARTMENT OF COMMERCE
United States Patent and Trademark Office
Address: COMMISSIONER FOR PATENTS
P.O. Box 1450
Alexandria, Virginia 22313-1450
www.uspto.gov

NOTICE OF ALLOWANCE AND FEE(S) DUE

21710 7590 07/18/2024
BROWN RUDNICK LLP
ONE FINANCIAL CENTER
BOSTON, MA 02111

EXAMINER
BOCK, ABIGAIL MARIE

ART UNIT	PAPER NUMBER
3794	

DATE MAILED: 07/18/2024

APPLICATION NO.	FILING DATE	FIRST NAMED INVENTOR	ATTORNEY DOCKET NO.	CONFIRMATION NO.
18/647,755	04/26/2024	David Townley	NEURE-008/08US 35242/160	9306

TITLE OF INVENTION: SYSTEMS AND METHODS FOR THERAPEUTIC NASAL TREATMENT USING HANDHELD DEVICE

APPLN. TYPE	ENTITY STATUS	ISSUE FEE DUE	PUBLICATION FEE DUE	PREV. PAID ISSUE FEE	TOTAL FEE(S) DUE	DATE DUE
nonprovisional	SMALL	$480	$0.00	$0.00	$480	10/18/2024

THE APPLICATION IDENTIFIED ABOVE HAS BEEN EXAMINED AND IS ALLOWED FOR ISSUANCE AS A PATENT. PROSECUTION ON THE MERITS IS CLOSED. THIS NOTICE OF ALLOWANCE IS NOT A GRANT OF PATENT RIGHTS. THIS APPLICATION IS SUBJECT TO WITHDRAWAL FROM ISSUE AT THE INITIATIVE OF THE OFFICE OR UPON PETITION BY THE APPLICANT. SEE 37 CFR 1.313 AND MPEP 1308.

THE ISSUE FEE AND PUBLICATION FEE (IF REQUIRED) MUST BE PAID WITHIN THREE MONTHS FROM THE MAILING DATE OF THIS NOTICE OR THIS APPLICATION SHALL BE REGARDED AS ABANDONED. THIS STATUTORY PERIOD CANNOT BE EXTENDED. SEE 35 U.S.C. 151. THE ISSUE FEE DUE INDICATED ABOVE DOES NOT REFLECT A CREDIT FOR ANY PREVIOUSLY PAID ISSUE FEE IN THIS APPLICATION. IF AN ISSUE FEE HAS PREVIOUSLY BEEN PAID IN THIS APPLICATION (AS SHOWN ABOVE), THE RETURN OF PART B OF THIS FORM WILL BE CONSIDERED A REQUEST TO REAPPLY THE PREVIOUSLY PAID ISSUE FEE TOWARD THE ISSUE FEE NOW DUE.

HOW TO REPLY TO THIS NOTICE:

I. Review the ENTITY STATUS shown above. If the ENTITY STATUS is shown as SMALL or MICRO, verify whether entitlement to that entity status still applies.

If the ENTITY STATUS is the same as shown above, pay the TOTAL FEE(S) DUE shown above.

If the ENTITY STATUS is changed from that shown above, on PART B - FEE(S) TRANSMITTAL, complete section number 5 titled "Change in Entity Status (from status indicated above)".

For purposes of this notice, small entity fees are 40% the amount of undiscounted fees, and micro entity fees are 20% the amount of undiscounted fees.

II. PART B - FEE(S) TRANSMITTAL, or its equivalent, must be completed and returned to the United States Patent and Trademark Office (USPTO) with your ISSUE FEE and PUBLICATION FEE (if required). If you are charging the fee(s) to your deposit account, section "4b" of Part B - Fee(s) Transmittal should be completed. If an equivalent of Part B is filed, a request to reapply a previously paid issue fee must be clearly made, and delays in processing may occur due to the difficulty in recognizing the paper as an equivalent of Part B.

III. All communications regarding this application must give the application number. Please direct all communications prior to issuance to Mail Stop ISSUE FEE unless advised to the contrary.

IMPORTANT REMINDER: Maintenance fees are due in utility patents issuing on applications filed on or after Dec. 12, 1980. It is patentee's responsibility to ensure timely payment of maintenance fees when due. More information is available at www.uspto.gov/PatentMaintenanceFees.

PTOL-85 (Rev. 11/23)

Aerin Exhibit 1002, Page 15 of 327
Aerin Medical Inc. v. Neurent Medical Ltd.
IPR2025-01125

PART B - FEE(S) TRANSMITTAL

Complete and send this form, together with applicable fee(s), by mail or fax, or via the USPTO patent electronic filing system.

By mail, send to: Mail Stop ISSUE FEE
Commissioner for Patents
P.O. Box 1450
Alexandria, Virginia 22313-1450

By fax, send to: (571)-273-2885

INSTRUCTIONS: This form should be used for transmitting the ISSUE FEE and PUBLICATION FEE (if required). Blocks 1 through 5 should be completed where appropriate. All further correspondence will be mailed to the current correspondence address as indicated unless corrected below or directed otherwise in Block 1, by (a) specifying a new correspondence address; and/or (b) indicating a separate "FEE ADDRESS" for maintenance fee notifications. **Because electronic patent issuance may occur shortly after issue fee payment, any desired continuing application should preferably be filed prior to payment of this issue fee in order not to jeopardize copendency.**

CURRENT CORRESPONDENCE ADDRESS (Note: Use Block 1 for any change of address)

21710 7590 07/18/2024
BROWN RUDNICK LLP
ONE FINANCIAL CENTER
BOSTON, MA 02111

Note: A certificate of mailing can only be used for domestic mailings of the Fee(s) Transmittal. This certificate cannot be used for any other accompanying papers. Each additional paper, such as an assignment or formal drawing, must have its own certificate of mailing or transmission.

Certificate of Mailing or Transmission

I hereby certify that this Fee(s) Transmittal is being deposited with the United States Postal Service with sufficient postage for first class mail in an envelope addressed to the Mail Stop ISSUE FEE address above, or being transmitted to the USPTO via the USPTO patent electronic filing system or by facsimile to (571) 273-2885, on the date below.

(Typed or printed name)
(Signature)
(Date)

APPLICATION NO.	FILING DATE	FIRST NAMED INVENTOR	ATTORNEY DOCKET NO.	CONFIRMATION NO.
18/647,755	04/26/2024	David Townley	NEURE-008/08US	9306

TITLE OF INVENTION: SYSTEMS AND METHODS FOR THERAPEUTIC NASAL TREATMENT USING HANDHELD DEVICE

35242/160

APPLN. TYPE	ENTITY STATUS	ISSUE FEE DUE	PUBLICATION FEE DUE	PREV. PAID ISSUE FEE	TOTAL FEE(S) DUE	DATE DUE
nonprovisional	SMALL	$480	$0.00	$0.00	$480	10/18/2024

EXAMINER	ART UNIT	CLASS-SUBCLASS
BOCK, ABIGAIL MARIE	3794	606-041000

1. Change of correspondence address or indication of "Fee Address" (37 CFR 1.363).

❑ Change of correspondence address (or Change of Correspondence Address form PTO/AIA/122 or PTO/SB/122) attached.

❑ "Fee Address" indication (or "Fee Address" Indication form PTO/AIA/47 or PTO/SB/47; Rev 03-02 or more recent) attached. **Use of a Customer Number is required.**

2. For printing on the patent front page, list
(1) The names of up to 3 registered patent attorneys or agents OR, alternatively,
(2) The name of a single firm (having as a member a registered attorney or agent) and the names of up to 2 registered patent attorneys or agents. If no name is listed, no name will be printed.

1_____
2_____
3_____

3. ASSIGNEE NAME AND RESIDENCE DATA TO BE PRINTED ON THE PATENT (print or type)

PLEASE NOTE: Unless an assignee is identified below, no assignee data will appear on the patent. If an assignee is identified below, the document must have been previously recorded, or filed for recordation, as set forth in 37 CFR 3.11 and 37 CFR 3.81(a). Completion of this form is NOT a substitute for filing an assignment.

(A) NAME OF ASSIGNEE (B) RESIDENCE: (CITY and STATE OR COUNTRY)

Please check the appropriate assignee category or categories (will not be printed on the patent) : ❑ Individual ❑ Corporation or other private group entity ❑ Government

4a. Fees submitted: ❑Issue Fee ❑Publication Fee (if required)

4b. Method of Payment: *(Please first reapply any previously paid fee shown above)*

❑ Electronic Payment via the USPTO patent electronic filing system ❑ Enclosed check ❑ Non-electronic payment by credit card (Attach form PTO-2038)

❑ The Director is hereby authorized to charge the required fee(s), any deficiency, or credit any overpayment to Deposit Account No. _____

5. **Change in Entity Status** (from status indicated above)

❑ Applicant certifying micro entity status. See 37 CFR 1.29

NOTE: Absent a valid certification of Micro Entity Status (see forms PTO/SB/15A and 15B), issue fee payment in the micro entity amount will not be accepted at the risk of application abandonment.

❑ Applicant asserting small entity status. See 37 CFR 1.27

NOTE: If the application was previously under micro entity status, checking this box will be taken to be a notification of loss of entitlement to micro entity status.

❑ Applicant changing to regular undiscounted fee status.

NOTE: Checking this box will be taken to be a notification of loss of entitlement to small or micro entity status, as applicable.

NOTE: This form must be signed in accordance with 37 CFR 1.31 and 1.33. See 37 CFR 1.4 for signature requirements and certifications.

Authorized Signature _____ Date _____

Typed or printed name _____ Registration No. _____

Aerin Exhibit 1002, Page 16 of 327
Aerin Medical Inc. v. Neurent Medical Ltd.
IPR2025-01125

UNITED STATES PATENT AND TRADEMARK OFFICE

UNITED STATES DEPARTMENT OF COMMERCE
United States Patent and Trademark Office
Address: COMMISSIONER FOR PATENTS
P.O. Box 1450
Alexandria, Virginia 22313-1450
www.uspto.gov

APPLICATION NO.	FILING DATE	FIRST NAMED INVENTOR	ATTORNEY DOCKET NO.	CONFIRMATION NO.
18/647,755	04/26/2024	David Townley	NEURE-008/08US 35242/160	9306

21710 7590 07/18/2024
BROWN RUDNICK LLP
ONE FINANCIAL CENTER
BOSTON, MA 02111

EXAMINER
BOCK, ABIGAIL MARIE

ART UNIT	PAPER NUMBER
3794	

DATE MAILED: 07/18/2024

Determination of Patent Term Adjustment under 35 U.S.C. 154 (b)
(Applications filed on or after May 29, 2000)

The Office has discontinued providing a Patent Term Adjustment (PTA) calculation with the Notice of Allowance.

Section 1(h)(2) of the AIA Technical Corrections Act amended 35 U.S.C. 154(b)(3)(B)(i) to eliminate the requirement that the Office provide a patent term adjustment determination with the notice of allowance. See Revisions to Patent Term Adjustment, 78 Fed. Reg. 19416, 19417 (Apr. 1, 2013). Therefore, the Office is no longer providing an initial patent term adjustment determination with the notice of allowance. The Office will continue to provide a patent term adjustment determination with the Issue Notification Letter that is mailed to applicant approximately three weeks prior to the issue date of the patent, and will include the patent term adjustment on the patent. Any request for reconsideration of the patent term adjustment determination (or reinstatement of patent term adjustment) should follow the process outlined in 37 CFR 1.705.

Any questions regarding the Patent Term Extension or Adjustment determination should be directed to the Office of Patent Legal Administration at (571)-272-7702. Questions relating to issue and publication fee payments should be directed to the Customer Service Center of the Office of Patent Publication at 1-(888)-786-0101 or (571)-272-4200.

PTOL-85 (Rev. 11/23)

Aerin Exhibit 1002, Page 17 of 327
Aerin Medical Inc. v. Neurent Medical Ltd.
IPR2025-01125

OMB Clearance and PRA Burden Statement for PTOL-85 Part B

The Paperwork Reduction Act (PRA) of 1995 requires Federal agencies to obtain Office of Management and Budget approval before requesting most types of information from the public. When OMB approves an agency request to collect information from the public, OMB (i) provides a valid OMB Control Number and expiration date for the agency to display on the instrument that will be used to collect the information and (ii) requires the agency to inform the public about the OMB Control Number's legal significance in accordance with 5 CFR 1320.5(b).

The information collected by PTOL-85 Part B is required by 37 CFR 1.311. The information is required to obtain or retain a benefit by the public which is to file (and by the USPTO to process) an application. Confidentiality is governed by 35 U.S.C. 122 and 37 CFR 1.14. This collection is estimated to take 30 minutes to complete, including gathering, preparing, and submitting the completed application form to the USPTO. Time will vary depending upon the individual case. Any comments on the amount of time you require to complete this form and/or suggestions for reducing this burden, should be sent to the Chief Information Officer, U.S. Patent and Trademark Office, U.S. Department of Commerce, P.O. Box 1450, Alexandria, Virginia 22313-1450. DO NOT SEND FEES OR COMPLETED FORMS TO THIS ADDRESS. SEND TO: Commissioner for Patents, P.O. Box 1450, Alexandria, Virginia 22313-1450. Under the Paperwork Reduction Act of 1995, no persons are required to respond to a collection of information unless it displays a valid OMB control number.

Privacy Act Statement

The Privacy Act of 1974 (P.L. 93-579) requires that you be given certain information in connection with your submission of the attached form related to a patent application or patent. The United States Patent and Trademark Office (USPTO) collects the information in this record under authority of 35 U.S.C. 2. The USPTO's system of records is used to manage all applicant and owner information including name, citizenship, residence, post office address, and other information with respect to inventors and their legal representatives pertaining to the applicant's/owner's activities in connection with the invention for which a patent is sought or has been granted. The applicable Privacy Act System of Records Notice for the information collected in this form is COMMERCE/PAT-TM-7 Patent Application Files, available in the Federal Register at 78 FR 19243 (March 29, 2013).
https://www.govinfo.gov/content/pkg/FR-2013-03-29/pdf/2013-07341.pdf

Routine uses of the information in this record may include disclosure to:

1) law enforcement, in the event that the system of records indicates a violation or potential violation of law;
2) a federal, state, local, or international agency, in response to its request;
3) a contractor of the USPTO having need for the information in order to perform a contract;
4) the Department of Justice for determination of whether the Freedom of Information Act (FOIA) requires disclosure of the record;
5) a Member of Congress submitting a request involving an individual to whom the record pertains, when the individual has requested the Member's assistance with respect to the subject matter of the record;
6) a court, magistrate, or administrative tribunal, in the course of presenting evidence, including disclosures to opposing counsel in the course of settlement negotiations;
7) the Administrator, General Services Administration (GSA), or their designee, during an inspection of records conducted by GSA under authority of 44 U.S.C. 2904 and 2906, in accordance with the GSA regulations and any other relevant (i.e., GSA or Commerce) directive, where such disclosure shall not be used to make determinations about individuals;
8) another federal agency for purposes of National Security review (35 U.S.C. 181) and for review pursuant to the Atomic Energy Act (42 U.S.C. 218(c));
9) the Office of Personnel Management (OPM) for personnel research purposes; and
10) the Office of Management and Budget (OMB) for legislative coordination and clearance.

If you do not furnish the information requested on this form, the USPTO may not be able to process and/or examine your submission, which may result in termination of proceedings, abandonment of the application, and/or expiration of the patent.

Notice of Allowability	Application No. 18/647,755	Applicant(s) Townley, David	
	Examiner Abigail M Bock	Art Unit 3794	AIA (FITF) Status Yes

-- The MAILING DATE of this communication appears on the cover sheet with the correspondence address--

All claims being allowable, PROSECUTION ON THE MERITS IS (OR REMAINS) CLOSED in this application. If not included herewith (or previously mailed), a Notice of Allowance (PTOL-85) or other appropriate communication will be mailed in due course. **THIS NOTICE OF ALLOWABILITY IS NOT A GRANT OF PATENT RIGHTS.** This application is subject to withdrawal from issue at the initiative of the Office or upon petition by the applicant. See 37 CFR 1.313 and MPEP 1308.

1. ☑ This communication is responsive to the Terminal Disclaimer filed 06/26/2024.
   ☐ A declaration(s)/affidavit(s) under **37 CFR 1.130(b)** was/were filed on _____.

2. ☐ An election was made by the applicant in response to a restriction requirement set forth during the interview on _____; the restriction requirement and election have been incorporated into this action.

3. ☑ The allowed claim(s) is/are 1-20 . As a result of the allowed claim(s), you may be eligible to benefit from the **Patent Prosecution Highway** program at a participating intellectual property office for the corresponding application. For more information, please see **http://www.uspto.gov/patents/init_events/pph/index.jsp** or send an inquiry to **PPHfeedback@uspto.gov.**

4. ☐ Acknowledgment is made of a claim for foreign priority under 35 U.S.C. § 119(a)-(d) or (f).

   Certified copies:

   a) ☐ All b) ☐ Some* c) ☐ None of the:

   1. ☐ Certified copies of the priority documents have been received.
   2. ☐ Certified copies of the priority documents have been received in Application No. _____ .
   3. ☐ Copies of the certified copies of the priority documents have been received in this national stage application from the International Bureau (PCT Rule 17.2(a)).

   * Certified copies not received: _____ .

Applicant has THREE MONTHS FROM THE "MAILING DATE" of this communication to file a reply complying with the requirements noted below. Failure to timely comply will result in ABANDONMENT of this application.
THIS THREE-MONTH PERIOD IS NOT EXTENDABLE.

5. ☐ CORRECTED DRAWINGS (as "replacement sheets") must be submitted.
   ☐ including changes required by the attached Examiner's Amendment / Comment or in the Office action of Paper No./Mail Date _____ .

   Identifying indicia such as the application number (see 37 CFR 1.84(c)) should be written on the drawings in the front (not the back) of each sheet. Replacement sheet(s) should be labeled as such in the header according to 37 CFR 1.121(d).

6. ☐ DEPOSIT OF and/or INFORMATION about the deposit of BIOLOGICAL MATERIAL must be submitted. Note the attached Examiner's comment regarding REQUIREMENT FOR THE DEPOSIT OF BIOLOGICAL MATERIAL.

Attachment(s)

1. ☐ Notice of References Cited (PTO-892)
2. ☐ Information Disclosure Statements (PTO/SB/08), Paper No./Mail Date _____.
3. ☐ Examiner's Comment Regarding Requirement for Deposit of Biological Material _____.
4. ☐ Interview Summary (PTO-413), Paper No./Mail Date. _____.
5. ☐ Examiner's Amendment/Comment
6. ☑ Examiner's Statement of Reasons for Allowance
7. ☐ Other _____.

/ABIGAIL BOCK/ Examiner, Art Unit 3794	/LINDA C DVORAK/ Supervisory Patent Examiner, Art Unit 3794

Notice of Pre-AIA or AIA Status

The present application, filed on or after March 16, 2013, is being examined under the first inventor to file provisions of the AIA.

In the event the determination of the status of the application as subject to AIA 35 U.S.C. 102 and 103 (or as subject to pre-AIA 35 U.S.C. 102 and 103) is incorrect, any correction of the statutory basis (i.e., changing from AIA to pre-AIA) for the rejection will not be considered a new ground of rejection if the prior art relied upon, and the rationale supporting the rejection, would be the same under either status.

Terminal Disclaimer

The terminal disclaimer filed on 06/26/2024 disclaiming the terminal portion of any patent granted on this application which would extend beyond the expiration date of **U.S. Patent No. 11,998,262** has been reviewed and is accepted. The terminal disclaimer has been recorded.

Allowable Subject Matter

The following is an examiner's statement of reasons for allowance:

Upon further consideration of the prior art both in whole and in part, the claimed invention is not taught. Specifically, the prior art does not teach "A method for treating at least one of rhinitis, congestion, and rhinorrhea within a sino-nasal cavity of a patient, the method comprising: advancing a multi-electrode end effector into the sino-nasal cavity of the patient, wherein the multi-electrode end effector is operably associated with a shaft of a treatment device and configured for delivering energy to one or more target sites within the sino-nasal cavity of the patient, wherein the multi-electrode end effector comprises a first electrode that is spaced apart from a second electrode along a length of the multi-electrode end effector, wherein each of the first and second electrodes comprise an active state and an inactive state and comprise a respective location on the multi-electrode end effector, and wherein: the first electrode is exposed from a surface of the multi-electrode end effector and is

positioned at a discrete portion thereon, the first electrode extending in a first outward direction relative to a longitudinal axis of the shaft to interact with anatomy at a first location within the nasal cavity; and the second electrode is exposed from the surface of the multi-electrode end effector and is positioned at a discrete portion thereon, the second electrode extending in a second outward direction relative to a longitudinal axis of the shaft to interact with anatomy at a second location within the nasal cavity; and delivering energy, via the first and second electrodes, to one or more target sites within a sino-nasal cavity of the patient to disrupt multiple neural signals to mucus producing and/or mucosal engorgement elements, thereby reducing production of mucus and/or mucosal engorgement within a nose of the patient and reducing or eliminating one or more symptoms associated with at least one of rhinitis, congestion, and rhinorrhea to improve nasal breathability of the patient, wherein the one or more target sites is associated with a posterior nasal nerve and/or an inferior turbinate within the sino-nasal cavity." The most pertinent piece of prior art, U.S. Patent No. 11,998,262, is no longer considered prior art due to the filing of the terminal disclaimer as discussed above. Therefore, it is the Examiner's position that the application is now in condition for allowance.

Any comments considered necessary by applicant must be submitted no later than the payment of the issue fee and, to avoid processing delays, should preferably accompany the issue fee. Such submissions should be clearly labeled "Comments on Statement of Reasons for Allowance."

Conclusion

Any inquiry concerning this communication or earlier communications from the examiner should be directed to Abigail M Bock whose telephone number is (571)272-8856. The examiner can normally be reached M-F 7:30am - 5:00pm.

Examiner interviews are available via telephone, in-person, and video conferencing using a USPTO supplied web-based collaboration tool. To schedule an interview, applicant is encouraged to use the USPTO Automated Interview Request (AIR) at http://www.uspto.gov/interviewpractice.

If attempts to reach the examiner by telephone are unsuccessful, the examiner's supervisor, Linda Dvorak can be reached on 5712724764. The fax phone number for the organization where this application or proceeding is assigned is 571-273-8300.

Information regarding the status of published or unpublished applications may be obtained from Patent Center. Unpublished application information in Patent Center is available to registered users. To file and manage patent submissions in Patent Center, visit: https://patentcenter.uspto.gov. Visit https://www.uspto.gov/patents/apply/patent-center for more information about Patent Center and https://www.uspto.gov/patents/docx for information about filing in DOCX format. For additional questions, contact the Electronic Business Center (EBC) at 866-217-9197 (toll-free). If you would like assistance from a USPTO Customer Service Representative, call 800-786-9199 (IN USA OR CANADA) or 571-272-1000.

/ABIGAIL BOCK/
Examiner, Art Unit 3794

/LINDA C DVORAK/
Supervisory Patent Examiner, Art Unit 3794

Index of Claims	Application/Control No.	Applicant(s)/Patent Under Reexamination
	18/647,755	Townley, David
	Examiner	**Art Unit**
	Abigail M Bock	3794

✓	Rejected	-	Cancelled	N	Non-Elected	A	Appeal
=	Allowed	÷	Restricted	I	Interference	O	Objected

CLAIMS

☐ Claims renumbered in the same order as presented by applicant ☐ CPA ☐ T.D. ☐ R.1.47

CLAIM		DATE								
Final	Original	06/20/2024	07/02/2024							
1	1	✓	=							
2	2	✓	=							
5	3	✓	=							
6	4	✓	=							
10	5	✓	=							
13	6	✓	=							
14	7	✓	=							
11	8	✓	=							
12	9	✓	=							
7	10	✓	=							
8	11	✓	=							
9	12	✓	=							
3	13	✓	=							
4	14	✓	=							
15	15	✓	=							
16	16	✓	=							
17	17	✓	=							
18	18	✓	=							
19	19	✓	=							
20	20	✓	=							

Issue Classification	Application/Control No.	Applicant(s)/Patent Under Reexamination
	18/647,755	Townley, David
	Examiner	**Art Unit**
	Abigail M Bock	3794

CPC

Symbol					Type	Version
A61B	/	18	/	148	F	2013-01-01
A61B	/	2018	/	00434	A	2013-01-01
A61B	/	2018	/	00583	A	2013-01-01
A61B	/	2018	/	1467	A	2013-01-01
A61B	/	2018	/	00327	A	2013-01-01

CPC Combination Sets

Symbol					Type	Set	Ranking	Version
	/		/					

/ABIGAIL BOCK/ Examiner, Art Unit 3794 (Assistant Examiner)	02 July 2024 (Date)	**Total Claims Allowed:** 20	
/LINDA C DVORAK/ Supervisory Patent Examiner, Art Unit 3794 (Primary Examiner)	05 July 2024 (Date)	O.G. Print Claim(s) 1	O.G. Print Figure 4

U.S. Patent and Trademark Office

Part of Paper No.: 20240702

Aerin Exhibit 1002, Page 24 of 327
Aerin Medical Inc. v. Neurent Medical Ltd.
IPR2025-01125

Issue Classification	Application/Control No.	Applicant(s)/Patent Under Reexamination
	18/647,755	Townley, David
	Examiner	**Art Unit**
	Abigail M Bock	3794

INTERNATIONAL CLASSIFICATION				
CLAIMED				
A61B18/14	/	18	/	14
A61B18/00	/	18	/	00

NON-CLAIMED				
	/		/	

US ORIGINAL CLASSIFICATION	
CLASS	**SUBCLASS**

CROSS REFERENCES(S)						
CLASS	**SUBCLASS (ONE SUBCLASS PER BLOCK)**					

/ABIGAIL BOCK/ Examiner, Art Unit 3794 (Assistant Examiner)	02 July 2024 (Date)	**Total Claims Allowed:** 20	
/LINDA C DVORAK/ Supervisory Patent Examiner, Art Unit 3794 (Primary Examiner)	05 July 2024 (Date)	O.G. Print Claim(s) 1	O.G. Print Figure 4

U.S. Patent and Trademark Office

Part of Paper No.: 20240702

Aerin Exhibit 1002, Page 25 of 327
Aerin Medical Inc. v. Neurent Medical Ltd.
IPR2025-01125

Issue Classification	Application/Control No.	Applicant(s)/Patent Under Reexamination
	18/647,755	Townley, David
	Examiner	**Art Unit**
	Abigail M Bock	3794

☑ Claims renumbered in the same order as presented by applicant ☐ CPA ☐ T.D. ☐ R.1.47

CLAIMS

Final	Original	Final	Original	Final	Original	Final	Original	Final	Original	Final	Original	Final	Original	Final	Original
1	1	7	10	19	19										
2	2	8	11	20	20										
5	3	9	12												
6	4	3	13												
10	5	4	14												
13	6	15	15												
14	7	16	16												
11	8	17	17												
12	9	18	18												

/ABIGAIL BOCK/ Examiner, Art Unit 3794 (Assistant Examiner)	02 July 2024 (Date)	**Total Claims Allowed:** 20	
/LINDA C DVORAK/ Supervisory Patent Examiner, Art Unit 3794 (Primary Examiner)	05 July 2024 (Date)	O.G. Print Claim(s) 1	O.G. Print Figure 4

U.S. Patent and Trademark Office

Part of Paper No.: 20240702

Aerin Exhibit 1002, Page 26 of 327
Aerin Medical Inc. v. Neurent Medical Ltd.
IPR2025-01125

Search Notes	Application/Control No.	Applicant(s)/Patent Under Reexamination
	18/647,755	Townley, David
	Examiner	**Art Unit**
	Abigail M Bock	3794

CPC - Searched*		
Symbol	**Date**	**Examiner**
A61B18/148 A61B2018/00327 A612018/00434 A61B2018/00583 A61B2018/1467	06/20/2024	AB

CPC Combination Sets - Searched*		
Symbol	**Date**	**Examiner**

US Classification - Searched*			
Class	**Subclass**	**Date**	**Examiner**

* See search history printout included with this form or the SEARCH NOTES box below to determine the scope of the search.

Search Notes		
Search Notes	**Date**	**Examiner**
Name and assignee search performed in PALM/DAV	06/20/2024	AB
Limited text and classification search performed in PE2E Search - see attached search history	06/20/2024	AB

Interference Search			
US Class/CPC Symbol	**US Subclass/CPC Group**	**Date**	**Examiner**
A	A61B18/148 A61B2018/00327 A612018/00434 A61B2018/00583 A61B2018/1467	07/02/2024	AB

/ABIGAIL BOCK/ Examiner, Art Unit 3794	

Aerin Exhibit 1002, Page 27 of 327
Aerin Medical Inc. v. Neurent Medical Ltd.
IPR2025-01125

PE2E SEARCH - Search History (Prior Art)

Ref #	Hits	Search Query	DBs	Default Operator	Plurals	British Equivalents	Time Stamp
L1	66	((("TOWNLEY") near3 ("David"))).INV.	(US-PGPUB; USPAT; USOCR; EPO; JPO; DERWENT)	OR	ON	ON	2024/06/17 09:32 AM
L2	41	((("NEURENT") near3 ("MEDICAL") near3 ("LIMITED"))).AS,AANM.	(US-PGPUB; USPAT)	OR	ON	ON	2024/06/17 09:32 AM
L3	154	(US-20020068930-$ | US-20020072742-$ | US-20020177765-$ | US-20030016085-$ | US-20030212394-$ | US-20050080409-$ | US-20050171536-$ | US-20050171574-$ | US-20050171582-$ | US-20050171583-$ | US-20050187546-$ | US-20050240147-$ | US-20050283148-$ | US-20050288730-$ | US-20060036237-$ | US-20060055942-$ | US-20060100620-$ | US-20060106375-$ | US-20060116599-$ | US-20060149226-$ | US-20060247683-$ | US-20070006975-$ | US-20070031341-$ | US-20070032786-$ | US-20070083194-$ | US-20070083195-$ | US-20070093803-$ | US-20070129760-$ | US-20070173760-$ | US-20070219600-$ | US-20070233191-$ | US-20070265608-$ | US-20070287994-$ | US-20070299433-$ | US-20080021369-$ | US-20080154250-$ | US-20080287908-$ | US-20090198216-$ | US-20090306644-$ | US-20090318914-$ | US-20100049187-$ | US-20100057048-$ | US-20100168737-$ | US-20100204560-$ | US-20100305715-$ |	(US-PGPUB; USPAT)	OR	ON	ON	2024/06/17 09:32 AM

		US-20110004207-$ | US-20110152855-$ | US-20110238057-$ | US-20110264086-$ | US-20120078377-$ | US-20120191003-$ | US-20120259326-$ | US-20120323214-$ | US-20120323227-$ | US-20120323232-$ | US-20130018367-$ | US-20130123778-$ | US-20130158475-$ | US-20130165916-$ | US-20130172877-$ | US-20130178910-$ | US-20130253387-$ | US-20130253389-$ | US-20130282084-$ | US-20130289552-$ | US-20140005706-$ | US-20140018792-$ | US-20140025069-$ | US-20140074091-$ | US-20140100557-$ | US-20140114233-$ | US-20140180196-$ | US-20140200581-$ | US-20140243793-$ | US-20140276752-$ | US-20140303665-$ | US-20150006606-$ | US-20150018818-$ | US-20150031946-$ | US-20150066006-$ | US-20150112321-$ | US-20150119881-$ | US-20150150624-$ | US-20150164571-$ | US-20150182282-$ | US-20150202003-$ | US-20150257754-$ | US-20150257824-$ | US-20150257825-$ | US-20150265812-$ | US-20150289750-$ | US-20150297282-$ | US-20150313669-$ | US-20150351836-$ | US-20160008053-$ | US-20160015450-$ | US-20160045277-$ | US-20160120598-$ | US-20160128767-$ | US-20160250474-$ | US-20160287315-$ | US-20160331459-$ | US-20160354136-$ |					

		US-20170071494-$ | US-20170095252-$ | US-20170095288-$ | US-20170151014-$ | US-20170209199-$ | US-20170215950-$ | US-20170215952-$ | US-20170231474-$ | US-20170231651-$ | US-20170245924-$ | US-20170252089-$ | US-20170252100-$ | US-20170266422-$ | US-20170312021-$ | US-20180042471-$ | US-20180049802-$ | US-20180063678-$ | US-20180078327-$ | US-20180103994-$ | US-20180125560-$ | US-20180133460-$ | US-20180153375-$ | US-20180161577-$ | US-20180168503-$ | US-20180169414-$ | US-20180177542-$ | US-20180177546-$ | US-20180185085-$ | US-20180228533-$ | US-20180317993-$ | US-20180317997-$ | US-20180344378-$ | US-20180344411-$ | US-20190069949-$ | US-20190076185-$ | US-20190083157-$ | US-20190175242-$ | US-20190223944-$ | US-20190231409-$ | US-20190231429-$ | US-20190239953-$ | US-20190239954-$ | US-20190239955-$ | US-20190239956-$ | US-20190239957-$ | US-20190282289-$ | US-20190314620-$ | US-20200078134-$ | US-20200086112-$ | US-20200107882-$ | US-20200129223-$).DID.					
L4	51	(US-20200289185-$ | US-20210315627-$ | US-10022529-$ | US-10028780-$ | US-10028781-$ | US-	(US-PGPUB; USPAT)	OR	ON	ON	2024/06/17 09:33 AM

		10052465-$ | US- 10155108-$ | US- 10159538-$ | US- 10201687-$ | US- 10238861-$ | US- 10252048-$ | US- 10265115-$ | US- 10307200-$ | US- 10335221-$ | US- 10363094-$ | US- 10376300-$ | US- 10398489-$ | US- 10448985-$ | US- 10456185-$ | US- 10456186-$ | US- 10485603-$ | US- 10588682-$ | US- 10610675-$ | US- 10687883-$ | US- 10695557-$ | US- 10729897-$ | US- 10894011-$ | US- 11033318-$ | US- 11241271-$ | US- 11304746-$ | US- 11679077-$ | US- 11766286-$ | US- 20020606-$ | US- 20020613-$ | US- 20021128-$ | US- 20030123-$ | US- 20031113-$ | US- 20050414-$ | US- 20050804-$ | US- 20050825-$ | US- 20051027-$ | US- 20051222-$ | US- 20051229-$ | US- 20060216-$ | US- 20060316-$ | US- 20060511-$ | US- 20060518-$ | US- 20060601-$ | US- 20060706-$ | US- 20061102-$ | US- 20070111-$ | US- 20070208-$ | US- 20070412-$ | US- 20070426-$ | US- 20070607-$ | US- 20070726-$ | US- 20070920-$ | US- 20071004-$ | US- 20071115-$ | US- 20071213-$ | US- 20071227-$ | US- 20080124-$ | US- 20080626-$ | US-					

		20081120-$ | US- 20090806-$ | US- 20091210-$ | US- 20091224-$ | US- 20100225-$ | US- 20100304-$ | US- 20100701-$ | US- 20100812-$ | US- 20101202-$ | US- 20110106-$ | US- 20110623-$ | US- 20110929-$ | US- 20111027-$ | US- 20120329-$ | US- 20120726-$ | US- 20121011-$ | US- 20121220-$ | US- 20130117-$ | US- 20130516-$ | US- 20130620-$ | US- 20130627-$ | US- 20130704-$ | US- 20130711-$ | US- 20130926-$ | US- 20131024-$ | US- 20131031-$ | US- 20140102-$ | US- 20140116-$ | US- 20140123-$ | US- 20140313-$ | US- 20140410-$ | US- 20140424-$ | US- 20140626-$ | US- 20140717-$ | US- 20140828-$ | US- 20140918-$ | US- 20141009-$ | US- 20150101-$ | US- 20150115-$ | US- 20150129-$ | US- 20150305-$ | US- 20150423-$ | US- 20150430-$ | US- 20150604-$ | US- 20150618-$ | US- 20150702-$ | US- 20150723-$ | US- 20150917-$ | US- 20150924-$ | US- 20151015-$ | US- 20151022-$ | US- 20151105-$ | US- 20151210-$ | US- 20160114-$ | US- 20160121-$ | US- 20160218-$ | US- 20160505-$ | US- 20160512-$ | US-					

		20160901-$ | US- 20161006-$ | US- 20161117-$ | US- 20161208-$ | US- 20170316-$ | US- 20170406-$ | US- 20170601-$ | US- 20170727-$ | US- 20170803-$ | US- 20170817-$ | US- 20170831-$ | US- 20170907-$ | US- 20170921-$ | US- 20171102-$ | US- 20180215-$ | US- 20180222-$ | US- 20180301-$ | US- 20180322-$ | US- 20180419-$ | US- 20180510-$ | US- 20180517-$ | US- 20180607-$ | US- 20180614-$ | US- 20180621-$ | US- 20180628-$ | US- 20180705-$ | US- 20180816-$ | US- 20181108-$ | US- 20181206-$ | US- 20190307-$ | US- 20190314-$ | US- 20190321-$ | US- 20190613-$ | US- 20190725-$ | US- 20190801-$ | US- 20190808-$ | US- 20190919-$ | US- 20191017-$ | US- 20200312-$ | US- 20200319-$ | US- 20200409-$ | US- 20200430-$ | US- 20200917-$ | US- 20211014-$ | US- 2929852-$ | US- 3117571-$ | US- 3538919-$ | US- 3941121-$ | US- 3987795-$ | US- 4271848-$ | US- 4411266-$ | US- 4898169-$ | US- 5184625-$ | US- 5395383-$ | US- 5456662-$ | US- 5562720-$ | US- 5575788-$ | US- 5588429-$ | US-					

		5697536-$ | US- 5697882-$ | US- 5746224-$ | US- 5766605-$ | US- 5800429-$).DID.					
L5	84	(US-5823197-$ | US- 5827277-$ | US- 5836947-$ | US- 5843026-$ | US- 6033397-$ | US- 6045532-$ | US- 6053172-$ | US- 6063079-$ | US- 6106518-$ | US- 6139527-$ | US- 6142991-$ | US- 6273886-$ | US- 6332880-$ | US- 6352533-$ | US- 6517534-$ | US- 6517535-$ | US- 6520185-$ | US- 6529756-$ | US- 6594518-$ | US- 6595988-$ | US- 6626899-$ | US- 6652548-$ | US- 6669689-$ | US- 6685648-$ | US- 6746474-$ | US- 7195629-$ | US- 7232458-$ | US- 7285119-$ | US- 7500985-$ | US- 7524318-$ | US- 7608275-$ | US- 7654997-$ | US- 7655243-$ | US- 7758571-$ | US- 7771409-$ | US- 7803150-$ | US- 8105817-$ | US- 8133497-$ | US- 8231613-$ | US- 8338164-$ | US- 8372068-$ | US- 8382746-$ | US- 8460181-$ | US- 8463359-$ | US- 8512324-$ | US- 8636684-$ | US- 8747401-$ | US- 8920414-$ | US- 8936594-$ | US- 8939970-$ | US- 8961391-$ | US- 8986301-$ | US-	(US-PGPUB; USPAT)	OR	ON	ON	2024/06/17 09:33 AM

		8996137-$ | US-9055965-$ | US-9072597-$ | US-9101384-$ | US-9179964-$ | US-9179967-$ | US-9179973-$ | US-9233245-$ | US-9237924-$ | US-9333023-$ | US-9370649-$ | US-9415194-$ | US-9433463-$ | US-9440065-$ | US-9452010-$ | US-9486278-$ | US-9498278-$ | US-9498283-$ | US-9526571-$ | US-9649156-$ | US-9655667-$ | US-9687288-$ | US-9687296-$ | US-9700707-$ | US-9737702-$ | US-9763723-$ | US-9763743-$ | US-9788886-$ | US-9801752-$ | US-9888957-$ | US-9913682-$ | US-9943361-$).DID.					
L6	68	(WO-0117450-$ | JP-2001120565-$ | JP-2001526077-$ | WO-2007008954-$ | JP-2007537784-$ | JP-2009538641-$ | WO-2009154456-$ | WO-2010077980-$ | JP-2012143573-$ | JP-2015507964-$ | WO-2015013252-$ | WO-2015048806-$ | WO-2016134264-$ | WO-2016183337-$ | JP-2018515314-$ | WO-2018087601-$ | WO-2021205230-$ | WO-2021205231-$ | WO-2021260435-$ | EP-2929852-$ | WO-9410921-$).DID.	(US-PGPUB; USPAT; USOCR; FIT (AU, AP, AT, BE, BG, BR, BY, CA, CH, CN, CS, CU, CZ, DD, DE, DK, EA, EE, EP, ES, FI, FR, GB, HR, HU, ID, IE, IL, IS, IT, JP, KR, LT, LU, LV, MA, OA, RU, SU, WO, MC, MD, MY, NL, NO, NZ, PH, PL, PT, RO, RS, SE, SG, SI, SK, TH, TN, TR, TW, UA, VN); FPRS; EPO; JPO; DERWENT; IBM_TDB)	OR	ON	ON	2024/06/17 09:35 AM
L7	263	((US-20200129223-A1 OR US-20200078134-A1 OR US-20190314620-A1 OR	(US-PGPUB; USPAT; USOCR; FIT (AU, AP, AT, BE, BG, BR, BY, CA, CH, CN, CS, CU,	OR	ON	ON	2024/06/20 09:18 AM

		US-20190282289-A1 OR US-20190223944-A1 OR US-20190076185-A1 OR US-20190069949-A1 OR US-20180344411-A1 OR US-20180344378-A1 OR US-20180317997-A1 OR US-20180177546-A1 OR US-20180161577-A1 OR US-20180133460-A1 OR US-20180125560-A1 OR US-20180103994-A1 OR US-20180063678-A1 OR US-20180049802-A1 OR US-20180042471-A1 OR US-20170312021-A1 OR US-20170266422-A1 OR US-20170252089-A1 OR US-20170231651-A1 OR US-20170231474-A1 OR US-20170215952-A1 OR US-20170215950-A1 OR US-20170151014-A1 OR US-20170095252-A1 OR US-20170071494-A1 OR US-20160331459-A1 OR US-20160250474-A1 OR US-20160128767-A1 OR US-20160120598-A1 OR US-20160045277-A1 OR US-20160008053-A1 OR US-20150351836-A1 OR US-20150313669-A1 OR US-20150297282-A1 OR US-20150289750-A1 OR US-20150265812-A1 OR US-20150257824-A1 OR US-20150257825-A1 OR US-20150257754-A1 OR US-20150202003-A1 OR US-20150182282-A1 OR US-20150164571-A1 OR US-20150150624-A1 OR US-20150119881-	CZ, DD, DE, DK, EA, EE, EP, ES, FI, FR, GB, HR, HU, ID, IE, IL, IS, IT, JP, KR, LT, LU, LV, MA, OA, RU, SU, WO, MC, MD, MY, NL, NO, NZ, PH, PL, PT, RO, RS, SE, SG, SI, SK, TH, TN, TR, TW, UA, VN); FPRS; EPO; JPO; DERWENT; IBM_TDB)				

		A1 OR US-20150112321-A1 OR US-20150066006-A1 OR US-20150031946-A1 OR US-20150018818-A1 OR US-20150006606-A1 OR US-20140303665-A1 OR US-20140276752-A1 OR US-20140243793-A1 OR US-20140200581-A1 OR US-20140180196-A1 OR US-20140100557-A1 OR US-20140074091-A1 OR US-20140025069-A1 OR US-20140018792-A1 OR US-20140005706-A1 OR US-20130289552-A1 OR US-20130282084-A1 OR US-20130253389-A1 OR US-20130253387-A1 OR US-20130178910-A1 OR US-20130172877-A1 OR US-20130165916-A1 OR US-20130158475-A1 OR US-20130123778-A1 OR US-20130018367-A1 OR US-20120323232-A1 OR US-20120323214-A1 OR US-20120259326-A1 OR US-20120191003-A1 OR US-20120078377-A1 OR US-20110264086-A1 OR US-20110238057-A1 OR US-20110152855-A1 OR US-20110004207-A1 OR US-20100305715-A1 OR US-20100204560-A1 OR US-20100168737-A1 OR US-20100057048-A1 OR US-20100049187-A1 OR US-20090318914-A1 OR US-20090306644-A1 OR US-20090198216-A1 OR US-20080287908-A1 OR					

		US-20080021369-A1 OR US-20070299433-A1 OR US-20070287994-A1 OR US-20070265608-A1 OR US-20070233191-A1 OR US-20070219600-A1 OR US-20070173760-A1 OR US-20070129760-A1 OR US-20070093803-A1 OR US-20070083194-A1 OR US-20070083195-A1 OR US-20070032786-A1 OR US-20070031341-A1 OR US-20070006975-A1 OR US-20060247683-A1 OR US-20060149226-A1 OR US-20060116599-A1 OR US-20060106375-A1 OR US-20060100620-A1 OR US-20060055942-A1 OR US-20060036237-A1 OR US-20050288730-A1 OR US-20050283148-A1 OR US-20050240147-A1 OR US-20050187546-A1 OR US-20050171536-A1 OR US-20050171574-A1 OR US-20050171582-A1 OR US-20050171583-A1 OR US-20050080409-A1 OR US-20030212394-A1 OR US-20030016085-A1 OR US-20020177765-A1 OR US-20020072742-A1 OR US-20020068930-A1 OR US-20210315627-A1 OR US-20200289185-A1).did. AND PGPB.dbnm.) OR ((US-11304746-B2 OR US-11241271-B2 OR US-11033318-B2 OR US-10695557-B1 OR US-10687883-B2 OR US-10588682-B2 OR US-10456185-B2 OR US-					

		10363094-B2 OR US- 10252048-B2 OR US- 10201687-B2 OR US- 10159538-B2 OR US- 10155108-B2 OR US- 10052465-B2 OR US- 10028780-B2 OR US- 10028781-B2 OR US- 10022529-B2 OR US- 5766605-A OR US- 5746224-A OR US- 5697536-A OR US- 5697882-A OR US- 5588429-A OR US- 5575788-A OR US- 5562720-A OR US- 5456662-A OR US- 5395383-A OR US- 5184625-A OR US- 4898169-A OR US- 4411266-A OR US- 4271848-A OR US- 3987795-A OR US- 3941121-A OR US- 3538919-A OR US- 3117571-A OR US- 2929852-A OR US- 9763743-B2 OR US- 9687288-B2 OR US- 9655667-B2 OR US- 9649156-B2 OR US- 9498278-B2 OR US- 9415194-B2 OR US- 9333023-B2 OR US- 9233245-B2 OR US- 9179973-B2 OR US- 9101384-B2 OR US- 8996137-B2 OR US- 8986301-B2 OR US- 8936594-B2 OR US- 8920414-B2 OR US- 8747401-B2 OR US- 8512324-B2 OR US- 8463359-B2 OR US- 8460181-B2 OR US- 8382746-B2 OR US- 8372068-B2 OR US- 8231613-B2 OR US- 7771409-B2 OR US- 7758571-B2 OR US- 7654997-B2 OR US- 7655243-B2 OR US- 7608275-B2 OR US- 7524318-B2 OR US- 7285119-B2 OR US- 7195629-B2 OR US- 6746474-B2 OR US- 6685648-B2 OR US-					

		6669689-B2 OR US-6652548-B2 OR US-6626899-B2 OR US-6595988-B2 OR US-6594518-B1 OR US-6529756-B1 OR US-6520185-B1 OR US-6517534-B1 OR US-6517535-B2 OR US-6352533-B1 OR US-6332880-B1 OR US-6273886-B1 OR US-6142991-A OR US-6139527-A OR US-6106518-A OR US-6063079-A OR US-6053172-A OR US-6045532-A OR US-6033397-A OR US-5843026-A OR US-5836947-A OR US-5827277-A OR US-5823197-A).did. AND USPT.dbnm.) OR ((WO-2021260435-A1 OR WO-2021205231-A1 OR WO-2021205230-A1 OR US-20180133460-A1 OR US-20160331459-A1 OR US-20160242667-A1 OR WO-2015048806-A2 OR WO-2015013252-A1 OR US-20120157968-A1 OR WO-2011127216-A2 OR WO-2010077980-A1 OR WO-2009154456-A1 OR WO-2007137235-A2 OR WO-2007037554-A1 OR WO-2007008954-A2 OR US-20050288730-A1 OR US-20050240147-A1 OR JP-2001120565-A OR WO-0117450-A1 OR WO-9932041-A1 OR WO-9410921-A1).did. AND DWPI.dbnm.) OR ((WO-2021260435-A1 OR WO-2021205230-A1 OR WO-2021205231-A1 OR WO-2018087601-A1 OR WO-2016183337-					

		A2 OR WO-2016134264-A1 OR EP-2929852-A1 OR WO-2015048806-A2 OR JP-2015507964-A OR WO-2015013252-A1 OR JP-2009538641-A5 OR WO-2010077980-A1 OR WO-2009154456-A1 OR JP-2009538641-A OR JP-2007537784-A5 OR JP-2007537784-A OR WO-2007008954-A2 OR JP-2001526077-A OR JP-2001120565-A OR WO-0117450-A1 OR WO-9410921-A1).did. AND FTDB.dbnm.) OR ((JP-2012143573-A OR JP-2001120565-A).did. AND JPAB.dbnm.) OR ((WO-2010077980-A1 OR WO-2009154456-A1 OR WO-2007008954-A2 OR WO-9410921-A1).did. AND EPAB.dbnm.)					
L8	6607	(A61B18/148 A61B2018/00327 A612018/00434 A61B2018/00583 A61B2018/1467).CPC.	(US-PGPUB; USPAT)	OR	ON	ON	2024/06/20 09:19 AM
L9	154	(US-20020068930-$ | US-20020072742-$ | US-20020177765-$ | US-20030016085-$ | US-20030212394-$ | US-20050080409-$ | US-20050171536-$ | US-20050171574-$ | US-20050171582-$ | US-20050171583-$ | US-20050187546-$ | US-20050240147-$ | US-20050283148-$ | US-20050288730-$ | US-20060036237-$ | US-20060055942-$ | US-20060100620-$ | US-20060106375-$ | US-20060116599-$ | US-20060149226-$ | US-20060247683-$ | US-20070006975-$ | US-20070031341-$ |	(US-PGPUB; USPAT)	OR	ON	ON	2024/06/26 10:04 AM

		US-20070032786-$ | US-20070083194-$ | US-20070083195-$ | US-20070093803-$ | US-20070129760-$ | US-20070173760-$ | US-20070219600-$ | US-20070233191-$ | US-20070265608-$ | US-20070287994-$ | US-20070299433-$ | US-20080021369-$ | US-20080154250-$ | US-20080287908-$ | US-20090198216-$ | US-20090306644-$ | US-20090318914-$ | US-20100049187-$ | US-20100057048-$ | US-20100168737-$ | US-20100204560-$ | US-20100305715-$ | US-20110004207-$ | US-20110152855-$ | US-20110238057-$ | US-20110264086-$ | US-20120078377-$ | US-20120191003-$ | US-20120259326-$ | US-20120323214-$ | US-20120323227-$ | US-20120323232-$ | US-20130018367-$ | US-20130123778-$ | US-20130158475-$ | US-20130165916-$ | US-20130172877-$ | US-20130178910-$ | US-20130253387-$ | US-20130253389-$ | US-20130282084-$ | US-20130289552-$ | US-20140005706-$ | US-20140018792-$ | US-20140025069-$ | US-20140074091-$ | US-20140100557-$ | US-20140114233-$ | US-20140180196-$ | US-20140200581-$ | US-20140243793-$ | US-20140276752-$ | US-20140303665-$ | US-20150006606-$ | US-20150018818-$ | US-20150031946-$ | US-20150066006-$ | US-20150112321-$ |					

		US-20150119881-$ | US-20150150624-$ | US-20150164571-$ | US-20150182282-$ | US-20150202003-$ | US-20150257754-$ | US-20150257824-$ | US-20150257825-$ | US-20150265812-$ | US-20150289750-$ | US-20150297282-$ | US-20150313669-$ | US-20150351836-$ | US-20160008053-$ | US-20160015450-$ | US-20160045277-$ | US-20160120598-$ | US-20160128767-$ | US-20160250474-$ | US-20160287315-$ | US-20160331459-$ | US-20160354136-$ | US-20170071494-$ | US-20170095252-$ | US-20170095288-$ | US-20170151014-$ | US-20170209199-$ | US-20170215950-$ | US-20170215952-$ | US-20170231474-$ | US-20170231651-$ | US-20170245924-$ | US-20170252089-$ | US-20170252100-$ | US-20170266422-$ | US-20170312021-$ | US-20180042471-$ | US-20180049802-$ | US-20180063678-$ | US-20180078327-$ | US-20180103994-$ | US-20180125560-$ | US-20180133460-$ | US-20180153375-$ | US-20180161577-$ | US-20180168503-$ | US-20180169414-$ | US-20180177542-$ | US-20180177546-$ | US-20180185085-$ | US-20180228533-$ | US-20180317993-$ | US-20180317997-$ | US-20180344378-$ | US-20180344411-$ | US-20190069949-$ | US-20190076185-$ | US-20190083157-$ |					

		US-20190175242-$ | US-20190223944-$ | US-20190231409-$ | US-20190231429-$ | US-20190239953-$ | US-20190239954-$ | US-20190239955-$ | US-20190239956-$ | US-20190239957-$ | US-20190282289-$ | US-20190314620-$ | US-20200078134-$ | US-20200086112-$ | US-20200107882-$ | US-20200129223-$).DID.					
L10	51	(US-20200289185-$ | US-20210315627-$ | US-10022529-$ | US-10028780-$ | US-10028781-$ | US-10052465-$ | US-10155108-$ | US-10159538-$ | US-10201687-$ | US-10238861-$ | US-10252048-$ | US-10265115-$ | US-10307200-$ | US-10335221-$ | US-10363094-$ | US-10376300-$ | US-10398489-$ | US-10448985-$ | US-10456185-$ | US-10456186-$ | US-10485603-$ | US-10588682-$ | US-10610675-$ | US-10687883-$ | US-10695557-$ | US-10729897-$ | US-10894011-$ | US-11033318-$ | US-11241271-$ | US-11304746-$ | US-11679077-$ | US-11766286-$ | US-20020606-$ | US-20020613-$ | US-20021128-$ | US-20030123-$ | US-20031113-$ | US-20050414-$ | US-20050804-$ | US-20050825-$ | US-20051027-$ | US-	(US-PGPUB; USPAT)	OR	ON	ON	2024/06/26 10:04 AM

		20051222-$ | US- 20051229-$ | US- 20060216-$ | US- 20060316-$ | US- 20060511-$ | US- 20060518-$ | US- 20060601-$ | US- 20060706-$ | US- 20061102-$ | US- 20070111-$ | US- 20070208-$ | US- 20070412-$ | US- 20070426-$ | US- 20070607-$ | US- 20070726-$ | US- 20070920-$ | US- 20071004-$ | US- 20071115-$ | US- 20071213-$ | US- 20071227-$ | US- 20080124-$ | US- 20080626-$ | US- 20081120-$ | US- 20090806-$ | US- 20091210-$ | US- 20091224-$ | US- 20100225-$ | US- 20100304-$ | US- 20100701-$ | US- 20100812-$ | US- 20101202-$ | US- 20110106-$ | US- 20110623-$ | US- 20110929-$ | US- 20111027-$ | US- 20120329-$ | US- 20120726-$ | US- 20121011-$ | US- 20121220-$ | US- 20130117-$ | US- 20130516-$ | US- 20130620-$ | US- 20130627-$ | US- 20130704-$ | US- 20130711-$ | US- 20130926-$ | US- 20131024-$ | US- 20131031-$ | US- 20140102-$ | US- 20140116-$ | US- 20140123-$ | US- 20140313-$ | US- 20140410-$ | US- 20140424-$ | US- 20140626-$ | US- 20140717-$ | US- 20140828-$ | US- 20140918-$ | US-					

		20141009-$ | US- 20150101-$ | US- 20150115-$ | US- 20150129-$ | US- 20150305-$ | US- 20150423-$ | US- 20150430-$ | US- 20150604-$ | US- 20150618-$ | US- 20150702-$ | US- 20150723-$ | US- 20150917-$ | US- 20150924-$ | US- 20151015-$ | US- 20151022-$ | US- 20151105-$ | US- 20151210-$ | US- 20160114-$ | US- 20160121-$ | US- 20160218-$ | US- 20160505-$ | US- 20160512-$ | US- 20160901-$ | US- 20161006-$ | US- 20161117-$ | US- 20161208-$ | US- 20170316-$ | US- 20170406-$ | US- 20170601-$ | US- 20170727-$ | US- 20170803-$ | US- 20170817-$ | US- 20170831-$ | US- 20170907-$ | US- 20170921-$ | US- 20171102-$ | US- 20180215-$ | US- 20180222-$ | US- 20180301-$ | US- 20180322-$ | US- 20180419-$ | US- 20180510-$ | US- 20180517-$ | US- 20180607-$ | US- 20180614-$ | US- 20180621-$ | US- 20180628-$ | US- 20180705-$ | US- 20180816-$ | US- 20181108-$ | US- 20181206-$ | US- 20190307-$ | US- 20190314-$ | US- 20190321-$ | US- 20190613-$ | US- 20190725-$ | US- 20190801-$ | US- 20190808-$ | US-					

		20190919-$ | US- 20191017-$ | US- 20200312-$ | US- 20200319-$ | US- 20200409-$ | US- 20200430-$ | US- 20200917-$ | US- 20211014-$ | US- 2929852-$ | US- 3117571-$ | US- 3538919-$ | US- 3941121-$ | US- 3987795-$ | US- 4271848-$ | US- 4411266-$ | US- 4898169-$ | US- 5184625-$ | US- 5395383-$ | US- 5456662-$ | US- 5562720-$ | US- 5575788-$ | US- 5588429-$ | US- 5697536-$ | US- 5697882-$ | US- 5746224-$ | US- 5766605-$ | US- 5800429-$).DID.					
L11	84	(US-5823197-$ | US- 5827277-$ | US- 5836947-$ | US- 5843026-$ | US- 6033397-$ | US- 6045532-$ | US- 6053172-$ | US- 6063079-$ | US- 6106518-$ | US- 6139527-$ | US- 6142991-$ | US- 6273886-$ | US- 6332880-$ | US- 6352533-$ | US- 6517534-$ | US- 6517535-$ | US- 6520185-$ | US- 6529756-$ | US- 6594518-$ | US- 6595988-$ | US- 6626899-$ | US- 6652548-$ | US- 6669689-$ | US- 6685648-$ | US- 6746474-$ | US- 7195629-$ | US- 7232458-$ | US- 7285119-$ | US- 7500985-$ | US- 7524318-$ | US-	(US-PGPUB; USPAT)	OR	ON	ON	2024/06/26 10:04 AM

		7608275-$ | US- 7654997-$ | US- 7655243-$ | US- 7758571-$ | US- 7771409-$ | US- 7803150-$ | US- 8105817-$ | US- 8133497-$ | US- 8231613-$ | US- 8338164-$ | US- 8372068-$ | US- 8382746-$ | US- 8460181-$ | US- 8463359-$ | US- 8512324-$ | US- 8636684-$ | US- 8747401-$ | US- 8920414-$ | US- 8936594-$ | US- 8939970-$ | US- 8961391-$ | US- 8986301-$ | US- 8996137-$ | US- 9055965-$ | US- 9072597-$ | US- 9101384-$ | US- 9179964-$ | US- 9179967-$ | US- 9179973-$ | US- 9233245-$ | US- 9237924-$ | US- 9333023-$ | US- 9370649-$ | US- 9415194-$ | US- 9433463-$ | US- 9440065-$ | US- 9452010-$ | US- 9486278-$ | US- 9498278-$ | US- 9498283-$ | US- 9526571-$ | US- 9649156-$ | US- 9655667-$ | US- 9687288-$ | US- 9687296-$ | US- 9700707-$ | US- 9737702-$ | US- 9763723-$ | US- 9763743-$ | US- 9788886-$ | US- 9801752-$ | US- 9888957-$ | US- 9913682-$ | US- 9943361-$).DID.					
L12	68	(WO-0117450-$ | JP-2001120565-$ | JP-2001526077-$ | WO-	(US-PGPUB; USPAT; USOCR; FIT (AU, AP, AT, BE, BG, BR, BY,	OR	ON	ON	2024/06/26 10:07 AM

		2007008954-$ | JP-2007537784-$ | JP-2009538641-$ | WO-2009154456-$ | WO-2010077980-$ | JP-2012143573-$ | WU-20130117-$ | JP-2015507964-$ | WO-2015013252-$ | WO-2015048806-$ | WO-2016134264-$ | WO-2016183337-$ | JP-2018515314-$ | WO-2018087601-$ | WO-2021205230-$ | WO-2021205231-$ | WO-2021260435-$ | EP-2929852-$ | WO-9410921-$).DID.	CA, CH, CN, CS, CU, CZ, DD, DE, DK, EA, EE, EP, ES, FI, FR, GB, HR, HU, ID, IE, IL, IS, IT, JP, KR, LT, LU, LV, MA, OA, RU, SU, WO, MC, MD, MY, NL, NO, NZ, PH, PL, PT, RO, RS, SE, SG, SI, SK, TH, TN, TR, TW, UA, VN); FPRS; EPO; JPO; DERWENT; IBM_TDB)				
L13	263	((US-20200129223-A1 OR US-20200078134-A1 OR US-20190314620-A1 OR US-20190282289-A1 OR US-20190223944-A1 OR US-20190076185-A1 OR US-20190069949-A1 OR US-20180344411-A1 OR US-20180344378-A1 OR US-20180317997-A1 OR US-20180177546-A1 OR US-20180161577-A1 OR US-20180133460-A1 OR US-20180125560-A1 OR US-20180103994-A1 OR US-20180063678-A1 OR US-20180049802-A1 OR US-20180042471-A1 OR US-20170312021-A1 OR US-20170266422-A1 OR US-20170252089-A1 OR US-20170231651-A1 OR US-20170231474-A1 OR US-20170215952-A1 OR US-20170215950-A1 OR US-20170151014-A1 OR US-20170095252-A1 OR US-20170071494-A1 OR US-20160331459-	(US-PGPUB; USPAT; USOCR; FIT (AU, AP, AT, BE, BG, BR, BY, CA, CH, CN, CS, CU, CZ, DD, DE, DK, EA, EE, EP, ES, FI, FR, GB, HR, HU, ID, IE, IL, IS, IT, JP, KR, LT, LU, LV, MA, OA, RU, SU, WO, MC, MD, MY, NL, NO, NZ, PH, PL, PT, RO, RS, SE, SG, SI, SK, TH, TN, TR, TW, UA, VN); FPRS; EPO; JPO; DERWENT; IBM_TDB)	OR	ON	ON	2024/06/26 10:28 AM

		A1 OR US-20160250474-A1 OR US-20160128767-A1 OR US-20160120598-A1 OR US-20160045277-A1 OR US-20160008053-A1 OR US-20150351836-A1 OR US-20150313669-A1 OR US-20150297282-A1 OR US-20150289750-A1 OR US-20150265812-A1 OR US-20150257824-A1 OR US-20150257825-A1 OR US-20150257754-A1 OR US-20150202003-A1 OR US-20150182282-A1 OR US-20150164571-A1 OR US-20150150624-A1 OR US-20150119881-A1 OR US-20150112321-A1 OR US-20150066006-A1 OR US-20150031946-A1 OR US-20150018818-A1 OR US-20150006606-A1 OR US-20140303665-A1 OR US-20140276752-A1 OR US-20140243793-A1 OR US-20140200581-A1 OR US-20140180196-A1 OR US-20140100557-A1 OR US-20140074091-A1 OR US-20140025069-A1 OR US-20140018792-A1 OR US-20140005706-A1 OR US-20130289552-A1 OR US-20130282084-A1 OR US-20130253389-A1 OR US-20130253387-A1 OR US-20130178910-A1 OR US-20130172877-A1 OR US-20130165916-A1 OR US-20130158475-A1 OR US-20130123778-A1 OR US-20130018367-A1 OR					

		US-20120323232-A1 OR US-20120323214-A1 OR US-20120259326-A1 OR US-20120191003-A1 OR US-20120078377-A1 OR US-20110264086-A1 OR US-20110238057-A1 OR US-20110152855-A1 OR US-20110004207-A1 OR US-20100305715-A1 OR US-20100204560-A1 OR US-20100168737-A1 OR US-20100057048-A1 OR US-20100049187-A1 OR US-20090318914-A1 OR US-20090306644-A1 OR US-20090198216-A1 OR US-20080287908-A1 OR US-20080021369-A1 OR US-20070299433-A1 OR US-20070287994-A1 OR US-20070265608-A1 OR US-20070233191-A1 OR US-20070219600-A1 OR US-20070173760-A1 OR US-20070129760-A1 OR US-20070093803-A1 OR US-20070083194-A1 OR US-20070083195-A1 OR US-20070032786-A1 OR US-20070031341-A1 OR US-20070006975-A1 OR US-20060247683-A1 OR US-20060149226-A1 OR US-20060116599-A1 OR US-20060106375-A1 OR US-20060100620-A1 OR US-20060055942-A1 OR US-20060036237-A1 OR US-20050288730-A1 OR US-20050283148-A1 OR US-20050240147-A1 OR US-20050187546-A1 OR US-20050171536-					

		A1 OR US-20050171574-A1 OR US-20050171582-A1 OR US-20050171583-A1 OR US-20050080409-A1 OR US-20030212394-A1 OR US-20030016085-A1 OR US-20020177765-A1 OR US-20020072742-A1 OR US-20020068930-A1 OR US-20210315627-A1 OR US-20200289185-A1).did. AND PGPB.dbnm.) OR ((US-11304746-B2 OR US-11241271-B2 OR US-11033318-B2 OR US-10695557-B1 OR US-10687883-B2 OR US-10588682-B2 OR US-10456185-B2 OR US-10363094-B2 OR US-10252048-B2 OR US-10201687-B2 OR US-10159538-B2 OR US-10155108-B2 OR US-10052465-B2 OR US-10028780-B2 OR US-10028781-B2 OR US-10022529-B2 OR US-5766605-A OR US-5746224-A OR US-5697536-A OR US-5697882-A OR US-5588429-A OR US-5575788-A OR US-5562720-A OR US-5456662-A OR US-5395383-A OR US-5184625-A OR US-4898169-A OR US-4411266-A OR US-4271848-A OR US-3987795-A OR US-3941121-A OR US-3538919-A OR US-3117571-A OR US-2929852-A OR US-9763743-B2 OR US-9687288-B2 OR US-9655667-B2 OR US-9649156-B2 OR US-9498278-B2 OR US-9415194-B2 OR US-9333023-B2 OR US-					

		9233245-B2 OR US-9179973-B2 OR US-9101384-B2 OR US-8996137-B2 OR US-8986301-B2 OR US-8936594-B2 OR US-8920414-B2 OR US-8747401-B2 OR US-8512324-B2 OR US-8463359-B2 OR US-8460181-B2 OR US-8382746-B2 OR US-8372068-B2 OR US-8231613-B2 OR US-7771409-B2 OR US-7758571-B2 OR US-7654997-B2 OR US-7655243-B2 OR US-7608275-B2 OR US-7524318-B2 OR US-7285119-B2 OR US-7195629-B2 OR US-6746474-B2 OR US-6685648-B2 OR US-6669689-B2 OR US-6652548-B2 OR US-6626899-B2 OR US-6595988-B2 OR US-6594518-B1 OR US-6529756-B1 OR US-6520185-B1 OR US-6517534-B1 OR US-6517535-B2 OR US-6352533-B1 OR US-6332880-B1 OR US-6273886-B1 OR US-6142991-A OR US-6139527-A OR US-6106518-A OR US-6063079-A OR US-6053172-A OR US-6045532-A OR US-6033397-A OR US-5843026-A OR US-5836947-A OR US-5827277-A OR US-5823197-A).did. AND USPT.dbnm.) OR ((WO-2021260435-A1 OR WO-2021205231-A1 OR WO-2021205230-A1 OR US-20180133460-A1 OR US-20160331459-A1 OR US-20160242667-A1 OR WO-2015048806-A2 OR WO-2015013252-					

		A1 OR US-20120157968-A1 OR WO-2011127216-A2 OR WO-2010077980-A1 OR WO-2009154456-A1 OR WO-2007137235-A2 OR WO-2007037554-A1 OR WO-2007008954-A2 OR US-20050288730-A1 OR US-20050240147-A1 OR JP-2001120565-A OR WO-0117450-A1 OR WO-9932041-A1 OR WO-9410921-A1).did. AND DWPI.dbnm.) OR ((WO-2021260435-A1 OR WO-2021205230-A1 OR WO-2021205231-A1 OR WO-2018087601-A1 OR WO-2016183337-A2 OR WO-2016134264-A1 OR EP-2929852-A1 OR WO-2015048806-A2 OR JP-2015507964-A OR WO-2015013252-A1 OR JP-2009538641-A5 OR WO-2010077980-A1 OR WO-2009154456-A1 OR JP-2009538641-A OR JP-2007537784-A5 OR JP-2007537784-A OR WO-2007008954-A2 OR JP-2001526077-A OR JP-2001120565-A OR WO-0117450-A1 OR WO-9410921-A1).did. AND FTDB.dbnm.) OR ((JP-2012143573-A OR JP-2001120565-A).did. AND JPAB.dbnm.) OR ((WO-2010077980-A1 OR WO-2009154456-A1 OR WO-2007008954-A2 OR WO-9410921-A1).did. AND EPAB.dbnm.)					
L14	60	L8 AND (L1 OR L2)	(US-PGPUB; USPAT)	OR	ON	ON	2024/07/02 02:23 PM

Ref #	Hits	Search Query	DBs	Default Operator	Plurals	British Equivalents	Time Stamp
N1	60	L8 AND (L1 OR L2)	(US-PGPUB; USPAT)	OR	ON	ON	2024/07/02 02:23 PM

Bibliographic Data

Application No: 18/647,755

Foreign Priority claimed: ○ Yes ◉ No

35 USC 119 (a-d) conditions met: ☐ Yes ☑ No | ☐ Met After Allowance

Verified and Acknowledged: /ABIGAIL BOCK/ (Examiner's Signature) | Initials

Title: SYSTEMS AND METHODS FOR THERAPEUTIC NASAL TREATMENT USING HANDHELD DEVICE

FILING or 371(c) DATE	CLASS	GROUP ART UNIT	ATTORNEY DOCKET NO.
04/26/2024	606	3794	NEURE-008/08US 35242/160
RULE			

APPLICANTS

Neurent Medical Limited, Oranmore, IRELAND

INVENTORS

David Townley,

CONTINUING DATA

This application is a CON of 18411476 01/12/2024 PAT 11998262

18411476 is a CON of 17225560 04/08/2021 PAT 11883091

17225560 has PRO of 63007584 04/09/2020

FOREIGN APPLICATIONS

IF REQUIRED, FOREIGN LICENSE GRANTED**

05/08/2024

**** SMALL ENTITY ****

STATE OR COUNTRY

ADDRESS

BROWN RUDNICK LLP
ONE FINANCIAL CENTER
BOSTON, MA 02111
UNITED STATES

FILING FEE RECEIVED

$2,400

UNITED STATES
PATENT AND TRADEMARK OFFICE

P.O. Box 1450
Alexandria, VA 22313 - 1450
www.uspto.gov

ELECTRONIC ACKNOWLEDGEMENT RECEIPT

APPLICATION #	RECEIPT DATE / TIME	ATTORNEY DOCKET #
18/647,755	**06/27/2024 05:48:31 PM Z ET**	**NEURE-008/08US 35242/160**

Title of Invention

SYSTEMS AND METHODS FOR THERAPEUTIC NASAL TREATMENT USING HANDHELD DEVICE

Application Information

APPLICATION TYPE	Utility - Nonprovisional Application under 35 USC 111(a)	PATENT #	-
CONFIRMATION #	9306	FILED BY	Matthew York
PATENT CENTER #	66155156	FILING DATE	04/26/2024
CUSTOMER #	21710	FIRST NAMED INVENTOR	David Townley
CORRESPONDENCE ADDRESS	-	AUTHORIZED BY	-

Documents

TOTAL DOCUMENTS: 1

DOCUMENT	PAGES	DESCRIPTION	SIZE (KB)
NEURE-008-08US_Response_to_OA.pdf	6	Amendment/Request for Reconsideration-After Non-Final Rejection	105 KB

Digest

DOCUMENT	MESSAGE DIGEST(SHA-512)
NEURE-008-08US_Response_to_OA.pdf	8EE0C65F38254637A444D060E013396C23E158EC63AD6E42620B5D56D228A52E3A4A4C9448C910028AAAC06AFBF6A8C571F6855041E65CDB9F86A79BCAAF8706

This Acknowledgement Receipt evidences receipt on the noted date by the USPTO of the indicated documents, characterized by the applicant, and including page counts, where applicable. It serves as evidence of receipt similar to a Post Card, as described in MPEP 503.

New Applications Under 35 U.S.C. 111

If a new application is being filed and the application includes the necessary components for filing date (see 37 CFR 1.53(b)-(d) and MPEP 506), a Filing Receipt (37 CFR 1.54) will be issued in due course and the date shown on this Acknowledgement Receipt will establish the filing date of the application

National Stage of an International Application under 35 U.S.C. 371

If a timely submission to enter the national stage of an international application is compliant with the conditions of 35 U.S.C. 371 and other applicable requirements a Form PCT/DO/EO/903 indicating acceptance of the application as a national stage submission under 35 U.S.C. 371 will be issued in addition to the Filing Receipt, in due course.

New International Application Filed with the USPTO as a Receiving Office

If a new international application is being filed and the international application includes the necessary components for an international filing date (see PCT Article 11 and MPEP 1810), a Notification of the International Application Number and of the International Filing Date (Form PCT/RO/105) will be issued in due course, subject to prescriptions concerning national security, and the date shown on this Acknowledgement Receipt will establish the international filing date of the application.

IN THE UNITED STATES PATENT AND TRADEMARK OFFICE

APPLICANT:	Neurent Medical Limited	ART UNIT:	3794
SERIAL NUMBER:	18/647,755	CONFIRMATION NO.:	9306
FILING DATE:	April 26, 2024	EXAMINER:	Abigail Marie Bock
TITLE:	SYSTEMS AND METHODS FOR THERAPEUTIC NASAL TREATMENT USING HANDHELD DEVICE		

Commissioner for Patents
P. O. Box 1450
Alexandria, VA 22313-1450

FILED ELECTRONICALLY

RESPONSE TO OFFICE ACTION

This paper is in response to the non-final Office Action mailed June 26, 2024 from the United States Patent and Trademark Office.

Applicant believes that no fees are due with this response, but authorizes the Office to charge any required fees due to Deposit Account 500369 to make this response timely and have it considered.

Listing of the Claims begin on page 2.

Remarks begin on page 6.

Listing of the Claims:

No amendments to the claims are made herein.

1. (Original) A method for treating at least one of rhinitis, congestion, and rhinorrhea within a sino-nasal cavity of a patient, the method comprising:

advancing a multi-electrode end effector into the sino-nasal cavity of the patient, wherein the multi-electrode end effector is operably associated with a shaft of a treatment device and configured for delivering energy to one or more target sites within the sino-nasal cavity of the patient, wherein the multi-electrode end effector comprises a first electrode that is spaced apart from a second electrode along a length of the multi-electrode end effector, wherein each of the first and second electrodes comprise an active state and an inactive state and comprise a respective location on the multi-electrode end effector, and wherein:

the first electrode is exposed from a surface of the multi-electrode end effector and is positioned at a discrete portion thereon, the first electrode extending in a first outward direction relative to a longitudinal axis of the shaft to interact with anatomy at a first location within the nasal cavity; and

the second electrode is exposed from the surface of the multi-electrode end effector and is positioned at a discrete portion thereon, the second electrode extending in a second outward direction relative to a longitudinal axis of the shaft to interact with anatomy at a second location within the nasal cavity; and

delivering energy, via the first and second electrodes, to one or more target sites within a sino-nasal cavity of the patient to disrupt multiple neural signals to mucus producing and/or mucosal engorgement elements, thereby reducing production of mucus and/or mucosal engorgement within a nose of the patient and reducing or eliminating one or more symptoms associated with at least one of rhinitis, congestion, and rhinorrhea to improve nasal breathability of the patient, wherein the one or more target sites is associated with a posterior nasal nerve and/or an inferior turbinate within the sino-nasal cavity.

2. (Original) The method of claim 1, wherein radiofrequency (RF) energy is delivered from the first and second electrodes to tissue at the one or more target sites and is controlled via a console unit operably associated with the treatment device and multi-electrode end effector.

3. (Original) The method of claim 2, wherein the console unit is configured to receive feedback from at least one temperature sensor arranged relative to the first and second electrodes and configured to sense temperature at an interface between tissue and the first and second electrodes, wherein the console unit is configured to control energy output from the first and second electrodes based, at least in part, on the feedback in order to maintain a predetermined temperature of tissue at the one or more target sites.

4. (Original) The method of claim 3, wherein the console unit is configured to receive one or more temperature readings from the at least one temperature sensor and process the readings to determine a level of RF energy to be delivered by the first and second electrodes that is sufficient to maintain a temperature of tissue at the one or more target sites below a predetermined threshold.

5. (Original) The method of claim 4, wherein the console unit comprises a hardware processor coupled to non-transitory, computer-readable memory containing instructions executable by the processor to cause the console unit to automatically control and adjust RF energy output from the first and second electrodes based, at least in part, on a predetermined elapsed time period and a predetermined threshold maximum temperature during delivery of RF energy to ensure that application of said RF energy results in the desired effect of reduced engorgement of the tissue at the target site for a given treatment application.

6. (Original) The method of claim 5, the predetermined elapsed time period is from about 1 second to about 20 seconds.

7. (Original) The method of claim 6, wherein the predetermined elapsed time period is from about 10 seconds to about 12 seconds.

8. (Original) The method of claim 5, wherein the predetermined threshold maximum temperature is less than 90°C.

9. (Original) The method of claim 5, wherein the predetermined threshold maximum temperature is greater than 37°C and less than 90°C.

10. (Original) The method of claim 4, wherein the console unit is configured to monitor temperature of tissue at the one or more target sites during delivery of RF energy thereto based on temperature readings from the at least one temperature sensor and further monitor an elapsed time during delivery of RF energy to tissue at the one or more target sites.

11. (Original) The method of claim 4, wherein the console unit is configured to provide, via a display, feedback information to an operator during a given treatment application, wherein said feedback information comprises at least an elapsed time during delivery of RF energy to tissue at the one or more target sites.

12. (Original) The method of claim 11, wherein the display is a touchscreen monitor.

13. The method of claim 2, wherein the console unit is operably coupled to an energy generator configured to generate RF energy to be delivered by the first and second electrodes.

14. (Original) The method of claim 13, wherein the RF energy comprises at least bipolar RF energy.

15. (Original) The method of claim 1, wherein the multi-electrode end effector comprises at least four electrodes,

wherein the at least four electrodes are oriented at an angle less than 90 degrees relative to the shaft for the delivery of radiofrequency (RF) energy,

wherein the shaft is a substantially rigid shaft with a hollow cavity,

wherein the shaft comprises an outer sheath and hypotube,

wherein the first electrode and second electrode is operably coupled to a console unit via wires disposed in the hollow cavity of the substantially rigid shaft, and

wherein RF energy is delivered from the first and second electrodes to tissue at the one or more target sites and is controlled via the console unit operably associated with the treatment device and multi-electrode end effector.

16. (Original) The method of claim 15, wherein the multi-electrode end effector comprises at least six electrodes, and

wherein the at least six electrodes are oriented at an angle less than 90 degrees relative to the shaft for the delivery of RF energy.

17. (Original) The method of claim 15, wherein the multi-electrode end effector comprises at least eight electrodes, and

wherein the at least eight electrodes are oriented at an angle less than 90 degrees relative to the shaft for the delivery of RF energy.

18. (Original) The method of claim 1, wherein delivering energy, via the first and second electrodes, to one or more target sites within a sino-nasal cavity of the patient comprises delivering energy targeting tissue at the one or more target sites around the posterior nasal nerve and/or the inferior turbinate.

19. (Original) The method of claim 18, wherein the targeted tissue comprises submucosal tissue associated with the inferior turbinate.

20. (Original) The method of claim 18, wherein the delivery of energy generates heat within submucosal tissue around a region of the posterior nasal nerve.

REMARKS

No amendments to the claims are made herein. Accordingly, claims 1-20 remain pending.

Double Patenting

The Office Action states at page 4 that claims 1-20 are rejected on the ground of nonstatutory double patenting over claims 1-20 of U.S. Patent No. 11,998,262.

The double patenting rejection is rendered moot with the filing of a terminal disclaimer submitted and approved on June 26, 2024 between the instant application and U.S. Patent No. 11,998,262. Accordingly, Applicant respectfully requests that the double patenting rejection be withdrawn.

Applicant respectfully submits that the pending claims are in condition for allowance, which is respectfully requested. If there are any questions regarding these remarks, the Examiners are invited and encouraged to contact Applicant's representatives at the telephone number provided.

Dated: June 27, 2024

Respectfully submitted,
BROWN RUDNICK LLP

BROWN RUDNICK LLP
One Financial Center
Boston, MA 02111
Tel: 617-856-8152
Fax: 617-856-8201

/Matthew P. York/
Matthew P. York, Reg. No. 66,470
Attorney for Applicant
Email: myork@brownrudnick.com

65370273 v1-036223/0022

Listing of the Claims:

No amendments to the claims are made herein.

1. (Original) A method for treating at least one of rhinitis, congestion, and rhinorrhea within a sino-nasal cavity of a patient, the method comprising:

advancing a multi-electrode end effector into the sino-nasal cavity of the patient, wherein the multi-electrode end effector is operably associated with a shaft of a treatment device and configured for delivering energy to one or more target sites within the sino-nasal cavity of the patient, wherein the multi-electrode end effector comprises a first electrode that is spaced apart from a second electrode along a length of the multi-electrode end effector, wherein each of the first and second electrodes comprise an active state and an inactive state and comprise a respective location on the multi-electrode end effector, and wherein:

the first electrode is exposed from a surface of the multi-electrode end effector and is positioned at a discrete portion thereon, the first electrode extending in a first outward direction relative to a longitudinal axis of the shaft to interact with anatomy at a first location within the nasal cavity; and

the second electrode is exposed from the surface of the multi-electrode end effector and is positioned at a discrete portion thereon, the second electrode extending in a second outward direction relative to a longitudinal axis of the shaft to interact with anatomy at a second location within the nasal cavity; and

delivering energy, via the first and second electrodes, to one or more target sites within a sino-nasal cavity of the patient to disrupt multiple neural signals to mucus producing and/or mucosal engorgement elements, thereby reducing production of mucus and/or mucosal engorgement within a nose of the patient and reducing or eliminating one or more symptoms associated with at least one of rhinitis, congestion, and rhinorrhea to improve nasal breathability of the patient, wherein the one or more target sites is associated with a posterior nasal nerve and/or an inferior turbinate within the sino-nasal cavity.

2. (Original) The method of claim 1, wherein radiofrequency (RF) energy is delivered from the first and second electrodes to tissue at the one or more target sites and is controlled via a console unit operably associated with the treatment device and multi-electrode end effector.

3. (Original) The method of claim 2, wherein the console unit is configured to receive feedback from at least one temperature sensor arranged relative to the first and second electrodes and configured to sense temperature at an interface between tissue and the first and second electrodes, wherein the console unit is configured to control energy output from the first and second electrodes based, at least in part, on the feedback in order to maintain a predetermined temperature of tissue at the one or more target sites.

4. (Original) The method of claim 3, wherein the console unit is configured to receive one or more temperature readings from the at least one temperature sensor and process the readings to determine a level of RF energy to be delivered by the first and second electrodes that is sufficient to maintain a temperature of tissue at the one or more target sites below a predetermined threshold.

5. (Original) The method of claim 4, wherein the console unit comprises a hardware processor coupled to non-transitory, computer-readable memory containing instructions executable by the processor to cause the console unit to automatically control and adjust RF energy output from the first and second electrodes based, at least in part, on a predetermined elapsed time period and a predetermined threshold maximum temperature during delivery of RF energy to ensure that application of said RF energy results in the desired effect of reduced engorgement of the tissue at the target site for a given treatment application.

6. (Original) The method of claim 5, the predetermined elapsed time period is from about 1 second to about 20 seconds.

7. (Original) The method of claim 6, wherein the predetermined elapsed time period is from about 10 seconds to about 12 seconds.

8. (Original) The method of claim 5, wherein the predetermined threshold maximum temperature is less than 90°C.

9. (Original) The method of claim 5, wherein the predetermined threshold maximum temperature is greater than 37°C and less than 90°C.

10. (Original) The method of claim 4, wherein the console unit is configured to monitor temperature of tissue at the one or more target sites during delivery of RF energy thereto based on temperature readings from the at least one temperature sensor and further monitor an elapsed time during delivery of RF energy to tissue at the one or more target sites.

11. (Original) The method of claim 4, wherein the console unit is configured to provide, via a display, feedback information to an operator during a given treatment application, wherein said feedback information comprises at least an elapsed time during delivery of RF energy to tissue at the one or more target sites.

12. (Original) The method of claim 11, wherein the display is a touchscreen monitor.

13. The method of claim 2, wherein the console unit is operably coupled to an energy generator configured to generate RF energy to be delivered by the first and second electrodes.

14. (Original) The method of claim 13, wherein the RF energy comprises at least bipolar RF energy.

15. (Original) The method of claim 1, wherein the multi-electrode end effector comprises at least four electrodes,

wherein the at least four electrodes are oriented at an angle less than 90 degrees relative to the shaft for the delivery of radiofrequency (RF) energy,

wherein the shaft is a substantially rigid shaft with a hollow cavity,

wherein the shaft comprises an outer sheath and hypotube,

wherein the first electrode and second electrode is operably coupled to a console unit via wires disposed in the hollow cavity of the substantially rigid shaft, and

wherein RF energy is delivered from the first and second electrodes to tissue at the one or more target sites and is controlled via the console unit operably associated with the treatment device and multi-electrode end effector.

16. (Original) The method of claim 15, wherein the multi-electrode end effector comprises at least six electrodes, and

wherein the at least six electrodes are oriented at an angle less than 90 degrees relative to the shaft for the delivery of RF energy.

17. (Original) The method of claim 15, wherein the multi-electrode end effector comprises at least eight electrodes, and

wherein the at least eight electrodes are oriented at an angle less than 90 degrees relative to the shaft for the delivery of RF energy.

18. (Original) The method of claim 1, wherein delivering energy, via the first and second electrodes, to one or more target sites within a sino-nasal cavity of the patient comprises delivering energy targeting tissue at the one or more target sites around the posterior nasal nerve and/or the inferior turbinate.

19. (Original) The method of claim 18, wherein the targeted tissue comprises submucosal tissue associated with the inferior turbinate.

20. (Original) The method of claim 18, wherein the delivery of energy generates heat within submucosal tissue around a region of the posterior nasal nerve.

REMARKS

No amendments to the claims are made herein. Accordingly, claims 1-20 remain pending.

Double Patenting

The Office Action states at page 4 that claims 1-20 are rejected on the ground of nonstatutory double patenting over claims 1-20 of U.S. Patent No. 11,998,262.

The double patenting rejection is rendered moot with the filing of a terminal disclaimer submitted and approved on June 26, 2024 between the instant application and U.S. Patent No. 11,998,262. Accordingly, Applicant respectfully requests that the double patenting rejection be withdrawn.

Applicant respectfully submits that the pending claims are in condition for allowance, which is respectfully requested. If there are any questions regarding these remarks, the Examiners are invited and encouraged to contact Applicant's representatives at the telephone number provided.

Dated: June 27, 2024

Respectfully submitted,
BROWN RUDNICK LLP

BROWN RUDNICK LLP
One Financial Center
Boston, MA 02111
Tel: 617-856-8152
Fax: 617-856-8201

/Matthew P. York/
Matthew P. York, Reg. No. 66,470
Attorney for Applicant
Email: myork@brownrudnick.com

65370273 v1-036223/0022

UNITED STATES PATENT AND TRADEMARK OFFICE

UNITED STATES DEPARTMENT OF COMMERCE
United States Patent and Trademark Office
Address: COMMISSIONER FOR PATENTS
P.O. Box 1450
Alexandria, Virginia 22313-1450
www.uspto.gov

APPLICATION NUMBER	FILING OR 371(C) DATE	FIRST NAMED APPLICANT	ATTY. DOCKET NO./TITLE
18/647,755	04/26/2024	David Townley	NEURE-008/08US 35242/160

CONFIRMATION NO. 9306

21710
BROWN RUDNICK LLP
ONE FINANCIAL CENTER
BOSTON, MA 02111

POA ACCEPTANCE LETTER

OC000000074508667

Date Mailed: 06/27/2024

NOTICE OF ACCEPTANCE OF POWER OF ATTORNEY

This is in response to the Power of Attorney filed 06/17/2024.

The Power of Attorney in this application is accepted. Correspondence in this application will be mailed to the above address as provided by 37 CFR 1.33.

Questions about the contents of this notice and the requirements it sets forth should be directed to the Office of Data Management, Application Assistance Unit, at **(571) 272-4000** or **(571) 272-4200** or **1-888-786-0101**.

/hsarwari/

PTO/SB/06 (09-11)
Approved for use through 1/31/2014. OMB 0651-0032
U.S. Patent and Trademark Office; U.S. DEPARTMENT OF COMMERCE
Under the Paperwork Reduction Act of 1995, no persons are required to respond to a collection of information unless it displays a valid OMB control number.

PATENT APPLICATION FEE DETERMINATION RECORD Substitute for Form PTO-875	Application or Docket Number 18/647,755	Filing Date 04/26/2024	☐ To be Mailed

ENTITY: ☐ LARGE ☑ SMALL ☐ MICRO

APPLICATION AS FILED - PART I

FOR	(Column 1) NUMBER FILED	(Column 2) NUMBER EXTRA		RATE ($)	FEE ($)
☐ BASIC FEE (37 CFR 1.16(a), (b), or (c))	N/A	N/A		N/A	
☐ SEARCH FEE (37 CFR 1.16(k), (i), or (m))	N/A	N/A		N/A	
☐ EXAMINATION FEE (37 CFR 1.16(o), (p), or (q))	N/A	N/A		N/A	
TOTAL CLAIMS (37 CFR 1.16(i))	minus 20 =	*		x $40 =	
INDEPENDENT CLAIMS (37 CFR 1.16(h))	minus 3 =	*		x $ 192 =	
☐ APPLICATION SIZE FEE (37 CFR 1.16(s))	If the specification and drawings exceed 100 sheets of paper, the application size fee due is $310 ($155 for small entity) for each additional 50 sheets or fraction thereof. See 35 U.S.C. 41(a)(1)(G) and 37 CFR 1.16(s).				
☐ MULTIPLE DEPENDENT CLAIM PRESENT (37 CFR 1.16(j))					
* If the difference in column 1 is less than zero, enter "0" in column 2.				TOTAL	

APPLICATION AS AMENDED - PART II

AMENDMENT	06/27/2024	(Column 1) CLAIMS REMAINING AFTER AMENDMENT		(Column 2) HIGHEST NUMBER PREVIOUSLY PAID FOR	(Column 3) PRESENT EXTRA		RATE ($)	ADDITIONAL FEE ($)
	Total (37 CFR 1.16(i))	* 20	Minus	** 20	= 0		x $40 =	0
	Independent (37 CFR 1.16(h))	* 1	Minus	*** 3	= 0		x $ 192 =	0
	☐ Application Size Fee (37 CFR 1.16(s))							
	☐ FIRST PRESENTATION OF MULTIPLE DEPENDENT CLAIM (37 CFR 1.16(j))							
							TOTAL ADD'L FEE	0

AMENDMENT		(Column 1) CLAIMS REMAINING AFTER AMENDMENT		(Column 2) HIGHEST NUMBER PREVIOUSLY PAID FOR	(Column 3) PRESENT EXTRA		RATE ($)	ADDITIONAL FEE ($)
	Total (37 CFR 1.16(i))	*	Minus	**	=		x $0 =	
	Independent (37 CFR 1.16(h))	*	Minus	***	=		x $0 =	
	☐ Application Size Fee (37 CFR 1.16(s))							
	☐ FIRST PRESENTATION OF MULTIPLE DEPENDENT CLAIM (37 CFR 1.16(j))							
							TOTAL ADD'L FEE	

* If the entry in column 1 is less than the entry in column 2, write "0" in column 3.	HSLIE
** If the "Highest Number Previously Paid For" IN THIS SPACE is less than 20, enter "20".	/TRACIE V HARGROVE/
*** If the "Highest Number Previously Paid For" IN THIS SPACE is less than 3, enter "3".	
The "Highest Number Previously Paid For" (Total or Independent) is the highest number found in the appropriate box in column 1.	

This collection of information is required by 37 CFR 1.16. The information is required to obtain or retain a benefit by the public which is to file (and by the USPTO to process) an application. Confidentiality is governed by 35 U.S.C. 122 and 37 CFR 1.14. This collection is estimated to take 12 minutes to complete, including gathering, preparing, and submitting the completed application form to the USPTO. Time will vary depending upon the individual case. Any comments on the amount of time you require to complete this form and/or suggestions for reducing this burden, should be sent to the Chief Information Officer, U.S. Patent and Trademark Office, U.S. Department of Commerce, P.O. Box 1450, Alexandria, VA 22313-1450. DO NOT SEND FEES OR COMPLETED FORMS TO THIS ADDRESS. **SEND TO: Commissioner for Patents, P.O. Box 1450, Alexandria, VA 22313-1450.**

If you need assistance in completing the form, call 1-800-PTO-9199 and select option 2.

Commissioner for Patents
United States Patent and Trademark Office
P.O. Box 1450
Alexandria, VA 22313 - 1450
www.uspto.gov

APPROVAL LETTER

APPLICATION #	FILING DATE	APPLICANT/PATENT UNDER REEXAMINATION
18/647,755	04/26/2024	David Townley

Title of Invention

SYSTEMS AND METHODS FOR THERAPEUTIC NASAL TREATMENT USING HANDHELD DEVICE

Electronic terminal disclaimer filed on 06/26/2024

☑ Approved

This patent is subject to a Terminal Disclaimer

Approved / Disapproved by: Electronic Terminal Disclaimer automatically approved

UNITED STATES
PATENT AND TRADEMARK OFFICE

P.O. Box 1450
Alexandria, VA 22313 - 1450
www.uspto.gov

ELECTRONIC PAYMENT RECEIPT

APPLICATION #	RECEIPT DATE / TIME	ATTORNEY DOCKET #
18/647,755	06/26/2024 05:51:45 PM Z ET	NEURE-008/08US 35242/160

Title of Invention

SYSTEMS AND METHODS FOR THERAPEUTIC NASAL TREATMENT USING HANDHELD DEVICE

Application Information

APPLICATION TYPE	Utility - Nonprovisional Application under 35 USC 111(a)	PATENT #	-
CONFIRMATION #	9306	FILED BY	Matthew York
PATENT CENTER #	66136204	AUTHORIZED BY	-
CUSTOMER #	21710	FILING DATE	04/26/2024
CORRESPONDENCE ADDRESS	-	FIRST NAMED INVENTOR	David Townley

Payment Information

PAYMENT METHOD	PAYMENT TRANSACTION ID	PAYMENT AUTHORIZED BY
DA / 500369	E20246PH51569161	Matthew York

FEE CODE	DESCRIPTION	ITEM PRICE($)	QUANTITY	ITEM TOTAL($)
2814	STATUTORY DISCLAIMER, INCLUDING TERMINAL DISCLAIMER	170.00	1	170.00
			TOTAL AMOUNT:	$170.00

This Acknowledgement Receipt evidences receipt on the noted date by the USPTO of the indicated documents, characterized by the applicant, and including page counts, where applicable. It serves as evidence of receipt similar to a Post Card, as described in MPEP 503.

New Applications Under 35 U.S.C. 111

If a new application is being filed and the application includes the necessary components for filing date (see 37 CFR 1.53(b)-(d) and MPEP 506), a Filing Receipt (37 CFR 1.54) will be issued in due course and the date shown on this Acknowledgement Receipt will establish the filing date of the application

National Stage of an International Application under 35 U.S.C. 371

If a timely submission to enter the national stage of an international application is compliant with the conditions of 35 U.S.C. 371 and other applicable requirements a Form PCT/DO/EO/903 indicating acceptance of the application as a national stage submission under 35 U.S.C. 371 will be issued in addition to the Filing Receipt, in due course.

New International Application Filed with the USPTO as a Receiving Office

If a new international application is being filed and the international application includes the necessary components for an international filing date (see PCT Article 11 and MPEP 1810), a Notification of the International Application Number and of the International Filing Date (Form PCT/RO/105) will be issued in due course, subject to prescriptions concerning national security, and the date shown on this Acknowledgement Receipt will establish the international filing date of the application.

P.O. Box 1450
Alexandria, VA 22313 - 1450
www.uspto.gov

TERMINAL DISCLAIMER TO OBVIATE A DOUBLE PATENTING REJECTION OVER A PRIOR PATENT

APPLICATION #	FILING DATE	FIRST NAMED INVENTOR	ATTORNEY DOCKET #
18647755	04/26/2024	David Townley	NEURE-008/08US 35242/160

Title of Invention

SYSTEMS AND METHODS FOR THERAPEUTIC NASAL TREATMENT USING HANDHELD DEVICE

✔ Filing of terminal disclaimer does not obviate requirement for response under 37 CFR 1.111 to outstanding Office Action

✔ This electronic Terminal Disclaimer is not being used for a Joint Research Agreement.

Owner	Percent Interest
Neurent Medical Limited	100%
Total	100%

The owner(s) of percent interest listed above in the instant application hereby disclaims, except as provided below, the terminal part of the statutory term of any patent granted on the instant application which would extend beyond the expiration date of the full statutory term of any patent granted on pending reference Application Number(s)

Application #	Filing Date

as the term of any patent granted on said reference application may be shortened by any terminal disclaimer filed prior to the grant of any patent on the pending reference application. The owner hereby agrees that any patent so granted on the instant application shall be enforceable only for and during such period that it and any patent granted on the reference application are commonly owned. This agreement runs with any patent granted on the

instant application and is binding upon the grantee, its successors or assigns.
In making the above disclaimer, the owner does not disclaim the terminal part of any patent granted on the instant application that would extend to the expiration date of the full statutory term of any patent granted on said reference application, "as the term of any patent granted on said reference application may be shortened by any terminal disclaimer filed prior to the grant of any patent on the pending reference application," in the event that any such patent granted on the pending reference application: expires for failure to pay a maintenance fee, is held unenforceable, is found invalid by a court of competent jurisdiction, is statutorily disclaimed in whole or terminally disclaimed under 37 CFR 1.321, has all claims canceled by a reexamination certificate, is reissued, or is in any manner terminated prior to the expiration of its full statutory term as shortened by any terminal disclaimer filed prior to its grant.

The owner(s) of percent interest listed above in the instant application hereby disclaims, except as provided below, the terminal part of the statutory term of any patent granted on the instant application which would extend beyond the expiration date of the full statutory term of prior patent number(s)

Patent #
11998262

as the term of said prior patent is presently shortened by any terminal disclaimer. The owner hereby agrees that any patent so granted on the instant application shall be enforceable only for and during such period that it and the prior patent are commonly owned. This agreement runs with any patent granted on the instant application and is binding upon the grantee, its successors or assigns.
In making the above disclaimer, the owner does not disclaim the terminal part of the term of any patent granted on the instant application that would extend to the expiration date of the full statutory term of the prior patent, "as the term of said prior patent is presently shortened by any terminal disclaimer," in the event that said prior patent later:
- expires for failure to pay a maintenance fee;
- is held unenforceable;
- is found invalid by a court of competent jurisdiction;
- is statutorily disclaimed in whole or terminally disclaimed under 37 CFR 1.321;
- has all claims canceled by a reexamination certificate;
- is reissued; or
- is in any manner terminated prior to the expiration of its full statutory term as presently shortened by any terminal disclaimer.

✔ Terminal disclaimer fee under 37 CFR 1.20(d) included with Electronic Terminal Disclaimer request.

Applicant claims the following entity status:
Small

I hereby declare that all statements made herein of my own knowledge are true and that all statemnts made on information and belief are believed to be true; and further that these statements were made with the knowledge that willful false statements and the like so made are punishable by fine or imprisonment, or both, under Section 1001 of Title 18 of the United States Code and that such willful false statements may jeopardize the validity of the application or any patent issued thereon.

I certify, in accordance with 37 CFR 1.4(d)(4) that I am: An attorney or agent registered to practice before the Patent and Trademark Office who is of record in this application

Signature	Name	Registration #
/Matthew P. York/	Matthew York	66470

* Statement under 37 CFR 3.73(b) is required if terminal disclaimer is signed by the assignee (owner). Form PTO/SB/96 may be used for making this certification. See MPEP 324.

UNITED STATES
PATENT AND TRADEMARK OFFICE

P.O. Box 1450
Alexandria, VA 22313 - 1450
www.uspto.gov

ELECTRONIC ACKNOWLEDGEMENT RECEIPT

APPLICATION #	RECEIPT DATE / TIME	ATTORNEY DOCKET #
18/647,755	**06/26/2024 05:51:45 PM Z ET**	**NEURE-008/08US 35242/160**

Title of Invention

SYSTEMS AND METHODS FOR THERAPEUTIC NASAL TREATMENT USING HANDHELD DEVICE

Application Information

APPLICATION TYPE	Utility - Nonprovisional Application under 35 USC 111(a)	PATENT #	-
CONFIRMATION #	9306	FILED BY	Matthew York
PATENT CENTER #	66136204	FILING DATE	04/26/2024
CUSTOMER #	21710	FIRST NAMED INVENTOR	David Townley
CORRESPONDENCE ADDRESS	-	AUTHORIZED BY	-

Documents

TOTAL DOCUMENTS: 2

DOCUMENT	PAGES	DESCRIPTION	SIZE (KB)
petition-request.pdf	3	Terminal Disclaimer-Filed (Electronic)	48 KB
grantLetter.pdf	1	Terminal Disclaimer-Electronic-Approved	19 KB

Digest

DOCUMENT	MESSAGE DIGEST(SHA-512)
petition-request.pdf	70E96D71C53CEF052B11532567BC7C3E36F5BD98699F0414D 83198CFD4C378CA8C98BEC7F59F1E0B45B47F32B7A931B38D

	4EC1C3F0D1F60E551887CFD20CC7CE
grantLetter.pdf	E07FAD22B0FA699220331D524C18D750ED47BBE3F65D065BD2D60EF2B87BEF9E7EECB5E4E4DC56DF44EA718658A3E13E8856EF9D128CAD3E2AC88BF55F38E72A

This Acknowledgement Receipt evidences receipt on the noted date by the USPTO of the indicated documents, characterized by the applicant, and including page counts, where applicable. It serves as evidence of receipt similar to a Post Card, as described in MPEP 503.

New Applications Under 35 U.S.C. 111

If a new application is being filed and the application includes the necessary components for filing date (see 37 CFR 1.53(b)-(d) and MPEP 506), a Filing Receipt (37 CFR 1.54) will be issued in due course and the date shown on this Acknowledgement Receipt will establish the filing date of the application.

National Stage of an International Application under 35 U.S.C. 371

If a timely submission to enter the national stage of an international application is compliant with the conditions of 35 U.S.C. 371 and other applicable requirements a Form PCT/DO/EO/903 indicating acceptance of the application as a national stage submission under 35 U.S.C. 371 will be issued in addition to the Filing Receipt, in due course.

New International Application Filed with the USPTO as a Receiving Office

If a new international application is being filed and the international application includes the necessary components for an international filing date (see PCT Article 11 and MPEP 1810), a Notification of the International Application Number and of the International Filing Date (Form PCT/RO/105) will be issued in due course, subject to prescriptions concerning national security, and the date shown on this Acknowledgement Receipt will establish the international filing date of the application.

UNITED STATES PATENT AND TRADEMARK OFFICE

UNITED STATES DEPARTMENT OF COMMERCE
United States Patent and Trademark Office
Address: COMMISSIONER FOR PATENTS
P.O. Box 1450
Alexandria, Virginia 22313-1450
www.uspto.gov

APPLICATION NO.	FILING DATE	FIRST NAMED INVENTOR	ATTORNEY DOCKET NO.	CONFIRMATION NO.
18/647,755	04/26/2024	David Townley	NEURE-008/08US 35242/160	9306

21710 7590 06/26/2024
BROWN RUDNICK LLP
ONE FINANCIAL CENTER
BOSTON, MA 02111

EXAMINER
BOCK, ABIGAIL MARIE

ART UNIT	PAPER NUMBER
3794	

NOTIFICATION DATE	DELIVERY MODE
06/26/2024	ELECTRONIC

Please find below and/or attached an Office communication concerning this application or proceeding.

The time period for reply, if any, is set in the attached communication.

Notice of the Office communication was sent electronically on above-indicated "Notification Date" to the following e-mail address(es):

ip@brownrudnick.com
usactions@brownrudnick.com

PTOL-90A (Rev. 04/07)

Office Action Summary	Application No. 18/647,755	Applicant(s) Townley, David	
	Examiner Abigail M Bock	Art Unit 3794	AIA (FITF) Status Yes

-- The MAILING DATE of this communication appears on the cover sheet with the correspondence address --

Period for Reply

A SHORTENED STATUTORY PERIOD FOR REPLY IS SET TO EXPIRE 3 MONTHS FROM THE MAILING DATE OF THIS COMMUNICATION.

- Extensions of time may be available under the provisions of 37 CFR 1.136(a). In no event, however, may a reply be timely filed after SIX (6) MONTHS from the mailing date of this communication.
- If NO period for reply is specified above, the maximum statutory period will apply and will expire SIX (6) MONTHS from the mailing date of this communication.
- Failure to reply within the set or extended period for reply will, by statute, cause the application to become ABANDONED (35 U.S.C. § 133). Any reply received by the Office later than three months after the mailing date of this communication, even if timely filed, may reduce any earned patent term adjustment. See 37 CFR 1.704(b).

Status

1)☑ Responsive to communication(s) filed on 04/26/2024.

☐ A declaration(s)/affidavit(s) under **37 CFR 1.130(b)** was/were filed on _____.

2a)☐ This action is **FINAL.** 2b) ☑ This action is non-final.

3)☐ An election was made by the applicant in response to a restriction requirement set forth during the interview on _____; the restriction requirement and election have been incorporated into this action.

4)☐ Since this application is in condition for allowance except for formal matters, prosecution as to the merits is closed in accordance with the practice under *Ex parte Quayle*, 1935 C.D. 11, 453 O.G. 213.

Disposition of Claims*

5) ☑ Claim(s) 1-20 is/are pending in the application.

5a) Of the above claim(s) _____ is/are withdrawn from consideration.

6) ☐ Claim(s) _____ is/are allowed.

7) ☑ Claim(s) 1-20 is/are rejected.

8) ☐ Claim(s) _____ is/are objected to.

9) ☐ Claim(s) _____ are subject to restriction and/or election requirement

* If any claims have been determined allowable, you may be eligible to benefit from the **Patent Prosecution Highway** program at a participating intellectual property office for the corresponding application. For more information, please see http://www.uspto.gov/patents/init_events/pph/index.jsp or send an inquiry to **PPHfeedback@uspto.gov.**

Application Papers

10)☐ The specification is objected to by the Examiner.

11)☑ The drawing(s) filed on 4-26-2024 is/are: a)☑ accepted or b)☐ objected to by the Examiner.

Applicant may not request that any objection to the drawing(s) be held in abeyance. See 37 CFR 1.85(a).

Replacement drawing sheet(s) including the correction is required if the drawing(s) is objected to. See 37 CFR 1.121(d).

Priority under 35 U.S.C. § 119

12)☐ Acknowledgment is made of a claim for foreign priority under 35 U.S.C. § 119(a)-(d) or (f).

Certified copies:

a)☐ All b)☐ Some** c)☐ None of the:

1.☐ Certified copies of the priority documents have been received.

2.☐ Certified copies of the priority documents have been received in Application No. _____.

3.☐ Copies of the certified copies of the priority documents have been received in this National Stage application from the International Bureau (PCT Rule 17.2(a)).

** See the attached detailed Office action for a list of the certified copies not received.

Attachment(s)

1) ☑ Notice of References Cited (PTO-892)

2) ☑ Information Disclosure Statement(s) (PTO/SB/08a and/or PTO/SB/08b) Paper No(s)/Mail Date _____.

3) ☐ Interview Summary (PTO-413) Paper No(s)/Mail Date _____.

4) ☐ Other: _____.

DETAILED ACTION

Notice of Pre-AIA or AIA Status

The present application, filed on or after March 16, 2013, is being examined under the first inventor to file provisions of the AIA.

In the event the determination of the status of the application as subject to AIA 35 U.S.C. 102 and 103 (or as subject to pre-AIA 35 U.S.C. 102 and 103) is incorrect, any correction of the statutory basis (i.e., changing from AIA to pre-AIA) for the rejection will not be considered a new ground of rejection if the prior art relied upon, and the rationale supporting the rejection, would be the same under either status.

Information Disclosure Statement

The information disclosure statement (IDS) submitted on 05/01/2024 and 06/17/2024 was filed after the mailing date of the application on 04/26/2024. The submission is in compliance with the provisions of 37 CFR 1.97. Accordingly, the information disclosure statement is being considered by the examiner.

Double Patenting

The nonstatutory double patenting rejection is based on a judicially created doctrine grounded in public policy (a policy reflected in the statute) so as to prevent the unjustified or improper timewise extension of the "right to exclude" granted by a patent and to prevent possible harassment by multiple assignees. A nonstatutory double patenting rejection is appropriate where the conflicting claims are not identical, but at least one examined application claim is not patentably distinct from the reference claim(s) because the examined application claim is either anticipated by, or would have been obvious over, the reference claim(s). See, e.g., *In re Berg*, 140 F.3d 1428, 46 USPQ2d 1226 (Fed. Cir. 1998); *In re Goodman*, 11 F.3d 1046, 29 USPQ2d 2010 (Fed. Cir. 1993); *In re Longi*, 759 F.2d 887, 225 USPQ 645 (Fed.

Cir. 1985); *In re Van Ornum*, 686 F.2d 937, 214 USPQ 761 (CCPA 1982); *In re Vogel*, 422 F.2d 438, 164 USPQ 619 (CCPA 1970); *In re Thorington*, 418 F.2d 528, 163 USPQ 644 (CCPA 1969).

A timely filed terminal disclaimer in compliance with 37 CFR 1.321(c) or 1.321(d) may be used to overcome an actual or provisional rejection based on nonstatutory double patenting provided the reference application or patent either is shown to be commonly owned with the examined application, or claims an invention made as a result of activities undertaken within the scope of a joint research agreement. See MPEP § 717.02 for applications subject to examination under the first inventor to file provisions of the AIA as explained in MPEP § 2159. See MPEP § 2146 *et seq.* for applications not subject to examination under the first inventor to file provisions of the AIA. A terminal disclaimer must be signed in compliance with 37 CFR 1.321(b).

The filing of a terminal disclaimer by itself is not a complete reply to a nonstatutory double patenting (NSDP) rejection. A complete reply requires that the terminal disclaimer be accompanied by a reply requesting reconsideration of the prior Office action. Even where the NSDP rejection is provisional the reply must be complete. See MPEP § 804, subsection I.B.1. For a reply to a non-final Office action, see 37 CFR 1.111(a). For a reply to final Office action, see 37 CFR 1.113(c). A request for reconsideration while not provided for in 37 CFR 1.113(c) may be filed after final for consideration. See MPEP §§ 706.07(e) and 714.13.

The USPTO Internet website contains terminal disclaimer forms which may be used. Please visit www.uspto.gov/patent/patents-forms. The actual filing date of the application in which the form is filed determines what form (e.g., PTO/SB/25, PTO/SB/26, PTO/AIA/25, or PTO/AIA/26) should be used. A web-based eTerminal Disclaimer may be filled out completely online using web-screens. An eTerminal Disclaimer that meets all requirements is auto-processed and approved immediately upon submission. For more information about eTerminal Disclaimers, refer to www.uspto.gov/patents/apply/applying-online/eterminal-disclaimer.

Claims 1-20 are rejected on the ground of nonstatutory double patenting as being unpatentable over **claims 1-20** of **U.S. Patent No. 11,998,262**. Although the claims at issue are not identical, they are not patentably distinct from each other because the similarity between the claims. The current application does not differ from the patented material presented in U.S. Patent No. 11,998,262 because both applications share the same structural limitations and use cases described. Specifically, both applications describe a method for improving a patient's sleep through the use of a multi-end effector that includes a first electrode and second electrode with active and inactive states, wherein the first electrode is exposed from a surface and separate from the second electrode, where both electrodes target sites within the sino-nasal cavity and deliver energy thereto. It is the Examiner's position that there is no patentable distinction between the two applications. Appropriate correction is required.

Conclusion

Any inquiry concerning this communication or earlier communications from the examiner should be directed to Abigail M Bock whose telephone number is (571)272-8856. The examiner can normally be reached M-F 7:30am - 5:00pm.

Examiner interviews are available via telephone, in-person, and video conferencing using a USPTO supplied web-based collaboration tool. To schedule an interview, applicant is encouraged to use the USPTO Automated Interview Request (AIR) at http://www.uspto.gov/interviewpractice.

If attempts to reach the examiner by telephone are unsuccessful, the examiner's supervisor, Linda Dvorak can be reached on 5712724764. The fax phone number for the organization where this application or proceeding is assigned is 571-273-8300.

Information regarding the status of published or unpublished applications may be obtained from Patent Center. Unpublished application information in Patent Center is available to registered users. To file and manage patent submissions in Patent Center, visit: https://patentcenter.uspto.gov. Visit https://www.uspto.gov/patents/apply/patent-center for more information about Patent Center and

https://www.uspto.gov/patents/docx for information about filing in DOCX format. For additional questions, contact the Electronic Business Center (EBC) at 866-217-9197 (toll-free). If you would like assistance from a USPTO Customer Service Representative, call 800-786-9199 (IN USA OR CANADA) or 571-272-1000.

/ABIGAIL BOCK/
Examiner, Art Unit 3794

/LINDA C DVORAK/
Supervisory Patent Examiner, Art Unit 3794

Notice of References Cited	Application/Control No. 18/647,755	Applicant(s)/Patent Under Reexamination Townley, David	
	Examiner Abigail M Bock	Art Unit 3794	Page 1 of 1

U.S. PATENT DOCUMENTS

*		Document Number Country Code-Number-Kind Code	Date YYYY-MM-DD	Name	CPC Classification	US Classification
*	A	US-11998262-B1	2024-06-04	Townley; David	A61B18/1492	1/1
	B					
	C					
	D					
	E					
	F					
	G					
	H					
	I					
	J					
	K					
	L					
	M					

FOREIGN PATENT DOCUMENTS

*		Document Number Country Code-Number-Kind Code	Date YYYY-MM-DD	Country	Name	CPC Classification
	N					
	O					
	P					
	Q					
	R					
	S					
	T					

NON-PATENT DOCUMENTS

*		Include as applicable: Author, Title Date, Publisher, Edition or Volume, Pertinent Pages)
	U	
	V	
	W	
	X	

*A copy of this reference is not being furnished with this Office action. (See MPEP § 707.05(a).)
Dates in YYYY-MM-DD format are publication dates. Classifications may be US or foreign.

Index of Claims	Application/Control No.	Applicant(s)/Patent Under Reexamination
	18/647,755	Townley, David
	Examiner	**Art Unit**
	Abigail M Bock	3794

✓	Rejected	-	Cancelled	N	Non-Elected	A	Appeal
=	Allowed	÷	Restricted	I	Interference	O	Objected

CLAIMS

☐ Claims renumbered in the same order as presented by applicant ☐ CPA ☐ T.D. ☐ R.1.47

CLAIM		DATE								
Final	Original	06/20/2024								
	1	✓								
	2	✓								
	3	✓								
	4	✓								
	5	✓								
	6	✓								
	7	✓								
	8	✓								
	9	✓								
	10	✓								
	11	✓								
	12	✓								
	13	✓								
	14	✓								
	15	✓								
	16	✓								
	17	✓								
	18	✓								
	19	✓								
	20	✓								

Search Notes	Application/Control No.	Applicant(s)/Patent Under Reexamination
	18/647,755	Townley, David
	Examiner	**Art Unit**
	Abigail M Bock	3794

CPC - Searched*		
Symbol	**Date**	**Examiner**
A61B18/148 A61B2018/00327 A612018/00434 A61B2018/00583 A61B2018/1467	06/20/2024	AB

CPC Combination Sets - Searched*		
Symbol	**Date**	**Examiner**

US Classification - Searched*			
Class	**Subclass**	**Date**	**Examiner**

* See search history printout included with this form or the SEARCH NOTES box below to determine the scope of the search.

Search Notes		
Search Notes	**Date**	**Examiner**
Name and assignee search performed in PALM/DAV	06/20/2024	AB
Limited text and classification search performed in PE2E Search - see attached search history	06/20/2024	AB

Interference Search			
US Class/CPC Symbol	**US Subclass/CPC Group**	**Date**	**Examiner**

/ABIGAIL BOCK/ Examiner, Art Unit 3794	

Aerin Exhibit 1002, Page 88 of 327
Aerin Medical Inc. v. Neurent Medical Ltd.
IPR2025-01125

Bibliographic Data

Application No: 18/647,755

Foreign Priority claimed: ○ Yes ◉ No

35 USC 119 (a-d) conditions met: ☐ Yes ☑ No | ☐ Met After Allowance

Verified and Acknowledged: /ABIGAIL BOCK/ (Examiner's Signature) | Initials

Title: SYSTEMS AND METHODS FOR THERAPEUTIC NASAL TREATMENT USING HANDHELD DEVICE

FILING or 371(c) DATE	CLASS	GROUP ART UNIT	ATTORNEY DOCKET NO.
04/26/2024	606	3794	NEURE-008/08US 35242/160
RULE			

APPLICANTS

Neurent Medical Limited, Oranmore, IRELAND

INVENTORS

David Townley,

CONTINUING DATA

This application is a CON of 18411476 01/12/2024 PAT 11998262

18411476 is a CON of 17225560 04/08/2021 PAT 11883091

17225560 has PRO of 63007584 04/09/2020

FOREIGN APPLICATIONS

IF REQUIRED, FOREIGN LICENSE GRANTED**

05/08/2024

**** SMALL ENTITY ****

STATE OR COUNTRY

ADDRESS

BROWN RUDNICK LLP
ONE FINANCIAL CENTER
BOSTON, MA 02111
UNITED STATES

FILING FEE RECEIVED

$2,400

Doc code: IDS
Doc description: Information Disclosure Statement (IDS) Filed

PTO/SB/08a (01-22)
Approved for use through 05/31/2024. OMB 0651-0031
U.S. Patent and Trademark Office; U.S. DEPARTMENT OF COMMERCE
Under the Paperwork Reduction Act of 1995, no persons are required to respond to a collection of information unless it contains a valid OMB control number.

INFORMATION DISCLOSURE STATEMENT BY APPLICANT (**Not for submission under 37 CFR 1.99)**		
	Application Number	18647755
	Filing Date	2024-04-26
	First Named Inventor	David Townley
	Art Unit	3794
	Examiner Name	A. M. Bock
	Attorney Docket Number	NEURE-008/08US 35242/160

U.S.PATENTS Remove

Examiner Initial*	Cite No	Patent Number	Kind Code[1]	Issue Date	Name of Patentee or Applicant of cited Document	Pages,Columns,Lines where Relevant Passages or Relevant Figures Appear
	1					

If you wish to add additional U.S. Patent citation information please click the Add button. Add

U.S.PATENT APPLICATION PUBLICATIONS Remove

Examiner Initial*	Cite No	Publication Number	Kind Code[1]	Publication Date	Name of Patentee or Applicant of cited Document	Pages,Columns,Lines where Relevant Passages or Relevant Figures Appear
	1					

If you wish to add additional U.S. Published Application citation information please click the Add button. Add

FOREIGN PATENT DOCUMENTS Remove

Examiner Initial*	Cite No	Foreign Document Number[3]	Country Code[2] ¡	Kind Code[4]	Publication Date	Name of Patentee or Applicant of cited Document	Pages,Columns,Lines where Relevant Passages or Relevant Figures Appear	T[5]
	1							☐

If you wish to add additional Foreign Patent Document citation information please click the Add button Add

NON-PATENT LITERATURE DOCUMENTS Remove

Examiner Initials*	Cite No	Include name of the author (in CAPITAL LETTERS), title of the article (when appropriate), title of the item (book, magazine, journal, serial, symposium, catalog, etc), date, pages(s), volume-issue number(s), publisher, city and/or country where published.	T[5]

ALL REFERENCES CONSIDERED EXCEPT WHERE LINED THROUGH. /A.M.B./

INFORMATION DISCLOSURE STATEMENT BY APPLICANT (Not for submission under 37 CFR 1.99)		
	Application Number	18647755
	Filing Date	2024-04-26
	First Named Inventor	David Townley
	Art Unit	3794
	Examiner Name	A. M. Bock
	Attorney Docket Number	NEURE-008/08US 35242/160

	1	Aerin Medical FDA 510(k) Summary - 510(k) Number K150637, dated October 23, 2015 (8 pages)	☐
	2	Aerin Medical FDA 510(k) Summary - 510(k) Number K161994, dated August 19, 2016 (6 pages)	☐
	3	Aerin Medical FDA 510(k) Summary - 510(k) Number K162810, dated December 9, 2016 (7 pages)	☐
	4	Aerin Medical FDA 510(k) Summary - 510(k) Number K172529, dated November 2, 2017 (7 pages)	☐
	5	Aerin Medical FDA 510(k) Summary - 510(k) Number K192471, dated September 9, 2019 (7 pages)	☐
	6	Aerin Medical FDA 510(k) Summary - 510(k) Number K200300, dated March 13, 2020 (6 pages)	☐

If you wish to add additional non-patent literature document citation information please click the Add button Add

EXAMINER SIGNATURE

Examiner Signature	/ABIGAIL BOCK/	Date Considered	06/20/2024

*EXAMINER: Initial if reference considered, whether or not citation is in conformance with MPEP 609. Draw line through a citation if not in conformance and not considered. Include copy of this form with next communication to applicant.

[1] See Kind Codes of USPTO Patent Documents at www.USPTO.GOV or MPEP 901.04. [2] Enter office that issued the document, by the two-letter code (WIPO Standard ST.3). [3] For Japanese patent documents, the indication of the year of the reign of the Emperor must precede the serial number of the patent document. [4] Kind of document by the appropriate symbols as indicated on the document under WIPO Standard ST.16 if possible. [5] Applicant is to place a check mark here if English language translation is attached.

ALL REFERENCES CONSIDERED EXCEPT WHERE LINED THROUGH. /A.M.B./

INFORMATION DISCLOSURE STATEMENT BY APPLICANT (Not for submission under 37 CFR 1.99)		
	Application Number	18647755
	Filing Date	2024-04-26
	First Named Inventor	David Townley
	Art Unit	3794
	Examiner Name	A. M. Bock
	Attorney Docket Number	NEURE-008/08US 35242/160

CERTIFICATION STATEMENT

Please see 37 CFR 1.97 and 1.98 to make the appropriate selection(s):

☐ That each item of information contained in the information disclosure statement was first cited in any communication from a foreign patent office in a counterpart foreign application not more than three months prior to the filing of the information disclosure statement. See 37 CFR 1.97(e)(1).

OR

☐ That no item of information contained in the information disclosure statement was cited in a communication from a foreign patent office in a counterpart foreign application, and, to the knowledge of the person signing the certification after making reasonable inquiry, no item of information contained in the information disclosure statement was known to any individual designated in 37 CFR 1.56(c) more than three months prior to the filing of the information disclosure statement. See 37 CFR 1.97(e)(2).

☐ See attached certification statement.

☐ The fee set forth in 37 CFR 1.17 (p) has been submitted herewith.

☒ A certification statement is not submitted herewith.

SIGNATURE

A signature of the applicant or representative is required in accordance with CFR 1.33, 10.18. Please see CFR 1.4(d) for the form of the signature.

Signature	/Matthew P. York/	Date (YYYY-MM-DD)	2024-06-17
Name/Print	Matthew P. York	Registration Number	66,470

This collection of information is required by 37 CFR 1.97 and 1.98. The information is required to obtain or retain a benefit by the public which is to file (and by the USPTO to process) an application. Confidentiality is governed by 35 U.S.C. 122 and 37 CFR 1.14. This collection is estimated to take 1 hour to complete, including gathering, preparing and submitting the completed application form to the USPTO. Time will vary depending upon the individual case. Any comments on the amount of time you require to complete this form and/or suggestions for reducing this burden, should be sent to the Chief Information Officer, U.S. Patent and Trademark Office, U.S. Department of Commerce, P.O. Box 1450, Alexandria, VA 22313-1450. DO NOT SEND FEES OR COMPLETED FORMS TO THIS ADDRESS. **SEND TO: Commissioner for Patents, P.O. Box 1450, Alexandria, VA 22313-1450.**

ALL REFERENCES CONSIDERED EXCEPT WHERE LINED THROUGH. /A.M.B./

Privacy Act Statement

The Privacy Act of 1974 (P.L. 93-579) requires that you be given certain information in connection with your submission of the attached form related to a patent application or patent. Accordingly, pursuant to the requirements of the Act, please be advised that: (1) the general authority for the collection of this information is 35 U.S.C. 2(b)(2); (2) furnishing of the information solicited is voluntary; and (3) the principal purpose for which the information is used by the U.S. Patent and Trademark Office is to process and/or examine your submission related to a patent application or patent. If you do not furnish the requested information, the U.S. Patent and Trademark Office may not be able to process and/or examine your submission, which may result in termination of proceedings or abandonment of the application or expiration of the patent.

The information provided by you in this form will be subject to the following routine uses:

1. The information on this form will be treated confidentially to the extent allowed under the Freedom of Information Act (5 U.S.C. 552) and the Privacy Act (5 U.S.C. 552a). Records from this system of records may be disclosed to the Department of Justice to determine whether the Freedom of Information Act requires disclosure of these record s.

2. A record from this system of records may be disclosed, as a routine use, in the course of presenting evidence to a court, magistrate, or administrative tribunal, including disclosures to opposing counsel in the course of settlement negotiations.

3. A record in this system of records may be disclosed, as a routine use, to a Member of Congress submitting a request involving an individual, to whom the record pertains, when the individual has requested assistance from the Member with respect to the subject matter of the record.

4. A record in this system of records may be disclosed, as a routine use, to a contractor of the Agency having need for the information in order to perform a contract. Recipients of information shall be required to comply with the requirements of the Privacy Act of 1974, as amended, pursuant to 5 U.S.C. 552a(m).

5. A record related to an International Application filed under the Patent Cooperation Treaty in this system of records may be disclosed, as a routine use, to the International Bureau of the World Intellectual Property Organization, pursuant to the Patent Cooperation Treaty.

6. A record in this system of records may be disclosed, as a routine use, to another federal agency for purposes of National Security review (35 U.S.C. 181) and for review pursuant to the Atomic Energy Act (42 U.S.C. 218(c)).

7. A record from this system of records may be disclosed, as a routine use, to the Administrator, General Services, or his/her designee, during an inspection of records conducted by GSA as part of that agency's responsibility to recommend improvements in records management practices and programs, under authority of 44 U.S.C. 2904 and 2906. Such disclosure shall be made in accordance with the GSA regulations governing inspection of records for this purpose, and any other relevant (i.e., GSA or Commerce) directive. Such disclosure shall not be used to make determinations about individuals.

8. A record from this system of records may be disclosed, as a routine use, to the public after either publication of the application pursuant to 35 U.S.C. 122(b) or issuance of a patent pursuant to 35 U.S.C. 151. Further, a record may be disclosed, subject to the limitations of 37 CFR 1.14, as a routine use, to the public if the record was filed in an application which became abandoned or in which the proceedings were terminated and which application is referenced by either a published application, an application open to public inspections or an issued patent.

9. A record from this system of records may be disclosed, as a routine use, to a Federal, State, or local law enforcement agency, if the USPTO becomes aware of a violation or potential violation of law or regulation.

ALL REFERENCES CONSIDERED EXCEPT WHERE LINED THROUGH. /A.M.B./

PE2E SEARCH - Search History (Prior Art)

Ref #	Hits	Search Query	DBs	Default Operator	Plurals	British Equivalents	Time Stamp
L1	66	((("TOWNLEY") near3 ("David"))).INV.	(US-PGPUB; USPAT; USOCR; EPO; JPO; DERWENT)	OR	ON	ON	2024/06/17 09:32 AM
L2	41	((("NEURENT") near3 ("MEDICAL") near3 ("LIMITED"))).AS,AANM.	(US-PGPUB; USPAT)	OR	ON	ON	2024/06/17 09:32 AM
L3	154	(US-20020068930-$ | US-20020072742-$ | US-20020177765-$ | US-20030016085-$ | US-20030212394-$ | US-20050080409-$ | US-20050171536-$ | US-20050171574-$ | US-20050171582-$ | US-20050171583-$ | US-20050187546-$ | US-20050240147-$ | US-20050283148-$ | US-20050288730-$ | US-20060036237-$ | US-20060055942-$ | US-20060100620-$ | US-20060106375-$ | US-20060116599-$ | US-20060149226-$ | US-20060247683-$ | US-20070006975-$ | US-20070031341-$ | US-20070032786-$ | US-20070083194-$ | US-20070083195-$ | US-20070093803-$ | US-20070129760-$ | US-20070173760-$ | US-20070219600-$ | US-20070233191-$ | US-20070265608-$ | US-20070287994-$ | US-20070299433-$ | US-20080021369-$ | US-20080154250-$ | US-20080287908-$ | US-20090198216-$ | US-20090306644-$ | US-20090318914-$ | US-20100049187-$ | US-20100057048-$ | US-20100168737-$ | US-20100204560-$ | US-20100305715-$ |	(US-PGPUB; USPAT)	OR	ON	ON	2024/06/17 09:32 AM

		US-20110004207-$ | US-20110152855-$ | US-20110238057-$ | US-20110264086-$ | US-20120078377-$ | US-20120191003-$ | US-20120259326-$ | US-20120323214-$ | US-20120323227-$ | US-20120323232-$ | US-20130018367-$ | US-20130123778-$ | US-20130158475-$ | US-20130165916-$ | US-20130172877-$ | US-20130178910-$ | US-20130253387-$ | US-20130253389-$ | US-20130282084-$ | US-20130289552-$ | US-20140005706-$ | US-20140018792-$ | US-20140025069-$ | US-20140074091-$ | US-20140100557-$ | US-20140114233-$ | US-20140180196-$ | US-20140200581-$ | US-20140243793-$ | US-20140276752-$ | US-20140303665-$ | US-20150006606-$ | US-20150018818-$ | US-20150031946-$ | US-20150066006-$ | US-20150112321-$ | US-20150119881-$ | US-20150150624-$ | US-20150164571-$ | US-20150182282-$ | US-20150202003-$ | US-20150257754-$ | US-20150257824-$ | US-20150257825-$ | US-20150265812-$ | US-20150289750-$ | US-20150297282-$ | US-20150313669-$ | US-20150351836-$ | US-20160008053-$ | US-20160015450-$ | US-20160045277-$ | US-20160120598-$ | US-20160128767-$ | US-20160250474-$ | US-20160287315-$ | US-20160331459-$ | US-20160354136-$ |					

		US-20170071494-$ | US-20170095252-$ | US-20170095288-$ | US-20170151014-$ | US-20170209199-$ | US-20170215950-$ | US-20170215952-$ | US-20170231474-$ | US-20170231651-$ | US-20170245924-$ | US-20170252089-$ | US-20170252100-$ | US-20170266422-$ | US-20170312021-$ | US-20180042471-$ | US-20180049802-$ | US-20180063678-$ | US-20180078327-$ | US-20180103994-$ | US-20180125560-$ | US-20180133460-$ | US-20180153375-$ | US-20180161577-$ | US-20180168503-$ | US-20180169414-$ | US-20180177542-$ | US-20180177546-$ | US-20180185085-$ | US-20180228533-$ | US-20180317993-$ | US-20180317997-$ | US-20180344378-$ | US-20180344411-$ | US-20190069949-$ | US-20190076185-$ | US-20190083157-$ | US-20190175242-$ | US-20190223944-$ | US-20190231409-$ | US-20190231429-$ | US-20190239953-$ | US-20190239954-$ | US-20190239955-$ | US-20190239956-$ | US-20190239957-$ | US-20190282289-$ | US-20190314620-$ | US-20200078134-$ | US-20200086112-$ | US-20200107882-$ | US-20200129223-$).DID.					
L4	51	(US-20200289185-$ | US-20210315627-$ | US-10022529-$ | US-10028780-$ | US-10028781-$ | US-	(US-PGPUB; USPAT)	OR	ON	ON	2024/06/17 09:33 AM

		10052465-$ | US- 10155108-$ | US- 10159538-$ | US- 10201687-$ | US- 10238861-$ | US- 10252048-$ | US- 10265115-$ | US- 10307200-$ | US- 10335221-$ | US- 10363094-$ | US- 10376300-$ | US- 10398489-$ | US- 10448985-$ | US- 10456185-$ | US- 10456186-$ | US- 10485603-$ | US- 10588682-$ | US- 10610675-$ | US- 10687883-$ | US- 10695557-$ | US- 10729897-$ | US- 10894011-$ | US- 11033318-$ | US- 11241271-$ | US- 11304746-$ | US- 11679077-$ | US- 11766286-$ | US- 20020606-$ | US- 20020613-$ | US- 20021128-$ | US- 20030123-$ | US- 20031113-$ | US- 20050414-$ | US- 20050804-$ | US- 20050825-$ | US- 20051027-$ | US- 20051222-$ | US- 20051229-$ | US- 20060216-$ | US- 20060316-$ | US- 20060511-$ | US- 20060518-$ | US- 20060601-$ | US- 20060706-$ | US- 20061102-$ | US- 20070111-$ | US- 20070208-$ | US- 20070412-$ | US- 20070426-$ | US- 20070607-$ | US- 20070726-$ | US- 20070920-$ | US- 20071004-$ | US- 20071115-$ | US- 20071213-$ | US- 20071227-$ | US- 20080124-$ | US- 20080626-$ | US-					

		20081120-$ | US- 20090806-$ | US- 20091210-$ | US- 20091224-$ | US- 20100225-$ | US- 20100304-$ | US- 20100701-$ | US- 20100812-$ | US- 20101202-$ | US- 20110106-$ | US- 20110623-$ | US- 20110929-$ | US- 20111027-$ | US- 20120329-$ | US- 20120726-$ | US- 20121011-$ | US- 20121220-$ | US- 20130117-$ | US- 20130516-$ | US- 20130620-$ | US- 20130627-$ | US- 20130704-$ | US- 20130711-$ | US- 20130926-$ | US- 20131024-$ | US- 20131031-$ | US- 20140102-$ | US- 20140116-$ | US- 20140123-$ | US- 20140313-$ | US- 20140410-$ | US- 20140424-$ | US- 20140626-$ | US- 20140717-$ | US- 20140828-$ | US- 20140918-$ | US- 20141009-$ | US- 20150101-$ | US- 20150115-$ | US- 20150129-$ | US- 20150305-$ | US- 20150423-$ | US- 20150430-$ | US- 20150604-$ | US- 20150618-$ | US- 20150702-$ | US- 20150723-$ | US- 20150917-$ | US- 20150924-$ | US- 20151015-$ | US- 20151022-$ | US- 20151105-$ | US- 20151210-$ | US- 20160114-$ | US- 20160121-$ | US- 20160218-$ | US- 20160505-$ | US- 20160512-$ | US-					

		20160901-$ | US- 20161006-$ | US- 20161117-$ | US- 20161208-$ | US- 20170316-$ | US- 20170406-$ | US- 20170601-$ | US- 20170727-$ | US- 20170803-$ | US- 20170817-$ | US- 20170831-$ | US- 20170907-$ | US- 20170921-$ | US- 20171102-$ | US- 20180215-$ | US- 20180222-$ | US- 20180301-$ | US- 20180322-$ | US- 20180419-$ | US- 20180510-$ | US- 20180517-$ | US- 20180607-$ | US- 20180614-$ | US- 20180621-$ | US- 20180628-$ | US- 20180705-$ | US- 20180816-$ | US- 20181108-$ | US- 20181206-$ | US- 20190307-$ | US- 20190314-$ | US- 20190321-$ | US- 20190613-$ | US- 20190725-$ | US- 20190801-$ | US- 20190808-$ | US- 20190919-$ | US- 20191017-$ | US- 20200312-$ | US- 20200319-$ | US- 20200409-$ | US- 20200430-$ | US- 20200917-$ | US- 20211014-$ | US- 2929852-$ | US- 3117571-$ | US- 3538919-$ | US- 3941121-$ | US- 3987795-$ | US- 4271848-$ | US- 4411266-$ | US- 4898169-$ | US- 5184625-$ | US- 5395383-$ | US- 5456662-$ | US- 5562720-$ | US- 5575788-$ | US- 5588429-$ | US-					

		5697536-$ | US- 5697882-$ | US- 5746224-$ | US- 5766605-$ | US- 5800429-$).DID.					
L5	84	(US-5823197-$ | US- 5827277-$ | US- 5836947-$ | US- 5843026-$ | US- 6033397-$ | US- 6045532-$ | US- 6053172-$ | US- 6063079-$ | US- 6106518-$ | US- 6139527-$ | US- 6142991-$ | US- 6273886-$ | US- 6332880-$ | US- 6352533-$ | US- 6517534-$ | US- 6517535-$ | US- 6520185-$ | US- 6529756-$ | US- 6594518-$ | US- 6595988-$ | US- 6626899-$ | US- 6652548-$ | US- 6669689-$ | US- 6685648-$ | US- 6746474-$ | US- 7195629-$ | US- 7232458-$ | US- 7285119-$ | US- 7500985-$ | US- 7524318-$ | US- 7608275-$ | US- 7654997-$ | US- 7655243-$ | US- 7758571-$ | US- 7771409-$ | US- 7803150-$ | US- 8105817-$ | US- 8133497-$ | US- 8231613-$ | US- 8338164-$ | US- 8372068-$ | US- 8382746-$ | US- 8460181-$ | US- 8463359-$ | US- 8512324-$ | US- 8636684-$ | US- 8747401-$ | US- 8920414-$ | US- 8936594-$ | US- 8939970-$ | US- 8961391-$ | US- 8986301-$ | US-	(US-PGPUB; USPAT)	OR	ON	ON	2024/06/17 09:33 AM

		8996137-$ | US-9055965-$ | US-9072597-$ | US-9101384-$ | US-9179964-$ | US-9179967-$ | US-9179973-$ | US-9233245-$ | US-9237924-$ | US-9333023-$ | US-9370649-$ | US-9415194-$ | US-9433463-$ | US-9440065-$ | US-9452010-$ | US-9486278-$ | US-9498278-$ | US-9498283-$ | US-9526571-$ | US-9649156-$ | US-9655667-$ | US-9687288-$ | US-9687296-$ | US-9700707-$ | US-9737702-$ | US-9763723-$ | US-9763743-$ | US-9788886-$ | US-9801752-$ | US-9888957-$ | US-9913682-$ | US-9943361-$).DID.					
L6	68	(WO-0117450-$ | JP-2001120565-$ | JP-2001526077-$ | WO-2007008954-$ | JP-2007537784-$ | JP-2009538641-$ | WO-2009154456-$ | WO-2010077980-$ | JP-2012143573-$ | JP-2015507964-$ | WO-2015013252-$ | WO-2015048806-$ | WO-2016134264-$ | WO-2016183337-$ | JP-2018515314-$ | WO-2018087601-$ | WO-2021205230-$ | WO-2021205231-$ | WO-2021260435-$ | EP-2929852-$ | WO-9410921-$).DID.	(US-PGPUB; USPAT; USOCR; FIT (AU, AP, AT, BE, BG, BR, BY, CA, CH, CN, CS, CU, CZ, DD, DE, DK, EA, EE, EP, ES, FI, FR, GB, HR, HU, ID, IE, IL, IS, IT, JP, KR, LT, LU, LV, MA, OA, RU, SU, WO, MC, MD, MY, NL, NO, NZ, PH, PL, PT, RO, RS, SE, SG, SI, SK, TH, TN, TR, TW, UA, VN); FPRS; EPO; JPO; DERWENT; IBM_TDB)	OR	ON	ON	2024/06/17 09:35 AM
L7	263	((US-20200129223-A1 OR US-20200078134-A1 OR US-20190314620-A1 OR	(US-PGPUB; USPAT; USOCR; FIT (AU, AP, AT, BE, BG, BR, BY, CA, CH, CN, CS, CU,	OR	ON	ON	2024/06/20 09:18 AM

		US-20190282289-A1 OR US-20190223944-A1 OR US-20190076185-A1 OR US-20190069949-A1 OR US-20180344411-A1 OR US-20180344378-A1 OR US-20180317997-A1 OR US-20180177546-A1 OR US-20180161577-A1 OR US-20180133460-A1 OR US-20180125560-A1 OR US-20180103994-A1 OR US-20180063678-A1 OR US-20180049802-A1 OR US-20180042471-A1 OR US-20170312021-A1 OR US-20170266422-A1 OR US-20170252089-A1 OR US-20170231651-A1 OR US-20170231474-A1 OR US-20170215952-A1 OR US-20170215950-A1 OR US-20170151014-A1 OR US-20170095252-A1 OR US-20170071494-A1 OR US-20160331459-A1 OR US-20160250474-A1 OR US-20160128767-A1 OR US-20160120598-A1 OR US-20160045277-A1 OR US-20160008053-A1 OR US-20150351836-A1 OR US-20150313669-A1 OR US-20150297282-A1 OR US-20150289750-A1 OR US-20150265812-A1 OR US-20150257824-A1 OR US-20150257825-A1 OR US-20150257754-A1 OR US-20150202003-A1 OR US-20150182282-A1 OR US-20150164571-A1 OR US-20150150624-A1 OR US-20150119881-	CZ, DD, DE, DK, EA, EE, EP, ES, FI, FR, GB, HR, HU, ID, IE, IL, IS, IT, JP, KR, LT, LU, LV, MA, OA, RU, SU, WO, MC, MD, MY, NL, NO, NZ, PH, PL, PT, RO, RS, SE, SG, SI, SK, TH, TN, TR, TW, UA, VN); FPRS; EPO; JPO; DERWENT; IBM_TDB)				

		A1 OR US-20150112321-A1 OR US-20150066006-A1 OR US-20150031946-A1 OR US-20150018818-A1 OR US-20150006606-A1 OR US-20140303665-A1 OR US-20140276752-A1 OR US-20140243793-A1 OR US-20140200581-A1 OR US-20140180196-A1 OR US-20140100557-A1 OR US-20140074091-A1 OR US-20140025069-A1 OR US-20140018792-A1 OR US-20140005706-A1 OR US-20130289552-A1 OR US-20130282084-A1 OR US-20130253389-A1 OR US-20130253387-A1 OR US-20130178910-A1 OR US-20130172877-A1 OR US-20130165916-A1 OR US-20130158475-A1 OR US-20130123778-A1 OR US-20130018367-A1 OR US-20120323232-A1 OR US-20120323214-A1 OR US-20120259326-A1 OR US-20120191003-A1 OR US-20120078377-A1 OR US-20110264086-A1 OR US-20110238057-A1 OR US-20110152855-A1 OR US-20110004207-A1 OR US-20100305715-A1 OR US-20100204560-A1 OR US-20100168737-A1 OR US-20100057048-A1 OR US-20100049187-A1 OR US-20090318914-A1 OR US-20090306644-A1 OR US-20090198216-A1 OR US-20080287908-A1 OR					

		US-20080021369-A1 OR US-20070299433-A1 OR US-20070287994-A1 OR US-20070265608-A1 OR US-20070233191-A1 OR US-20070219600-A1 OR US-20070173760-A1 OR US-20070129760-A1 OR US-20070093803-A1 OR US-20070083194-A1 OR US-20070083195-A1 OR US-20070032786-A1 OR US-20070031341-A1 OR US-20070006975-A1 OR US-20060247683-A1 OR US-20060149226-A1 OR US-20060116599-A1 OR US-20060106375-A1 OR US-20060100620-A1 OR US-20060055942-A1 OR US-20060036237-A1 OR US-20050288730-A1 OR US-20050283148-A1 OR US-20050240147-A1 OR US-20050187546-A1 OR US-20050171536-A1 OR US-20050171574-A1 OR US-20050171582-A1 OR US-20050171583-A1 OR US-20050080409-A1 OR US-20030212394-A1 OR US-20030016085-A1 OR US-20020177765-A1 OR US-20020072742-A1 OR US-20020068930-A1 OR US-20210315627-A1 OR US-20200289185-A1).did. AND PGPB.dbnm.) OR ((US-11304746-B2 OR US-11241271-B2 OR US-11033318-B2 OR US-10695557-B1 OR US-10687883-B2 OR US-10588682-B2 OR US-10456185-B2 OR US-					

		10363094-B2 OR US- 10252048-B2 OR US- 10201687-B2 OR US- 10159538-B2 OR US- 10155108-B2 OR US- 10052465-B2 OR US- 10028780-B2 OR US- 10028781-B2 OR US- 10022529-B2 OR US- 5766605-A OR US- 5746224-A OR US- 5697536-A OR US- 5697882-A OR US- 5588429-A OR US- 5575788-A OR US- 5562720-A OR US- 5456662-A OR US- 5395383-A OR US- 5184625-A OR US- 4898169-A OR US- 4411266-A OR US- 4271848-A OR US- 3987795-A OR US- 3941121-A OR US- 3538919-A OR US- 3117571-A OR US- 2929852-A OR US- 9763743-B2 OR US- 9687288-B2 OR US- 9655667-B2 OR US- 9649156-B2 OR US- 9498278-B2 OR US- 9415194-B2 OR US- 9333023-B2 OR US- 9233245-B2 OR US- 9179973-B2 OR US- 9101384-B2 OR US- 8996137-B2 OR US- 8986301-B2 OR US- 8936594-B2 OR US- 8920414-B2 OR US- 8747401-B2 OR US- 8512324-B2 OR US- 8463359-B2 OR US- 8460181-B2 OR US- 8382746-B2 OR US- 8372068-B2 OR US- 8231613-B2 OR US- 7771409-B2 OR US- 7758571-B2 OR US- 7654997-B2 OR US- 7655243-B2 OR US- 7608275-B2 OR US- 7524318-B2 OR US- 7285119-B2 OR US- 7195629-B2 OR US- 6746474-B2 OR US- 6685648-B2 OR US-					

		6669689-B2 OR US-6652548-B2 OR US-6626899-B2 OR US-6595988-B2 OR US-6594518-B1 OR US-6529756-B1 OR US-6520185-B1 OR US-6517534-B1 OR US-6517535-B2 OR US-6352533-B1 OR US-6332880-B1 OR US-6273886-B1 OR US-6142991-A OR US-6139527-A OR US-6106518-A OR US-6063079-A OR US-6053172-A OR US-6045532-A OR US-6033397-A OR US-5843026-A OR US-5836947-A OR US-5827277-A OR US-5823197-A).did. AND USPT.dbnm.) OR ((WO-2021260435-A1 OR WO-2021205231-A1 OR WO-2021205230-A1 OR US-20180133460-A1 OR US-20160331459-A1 OR US-20160242667-A1 OR WO-2015048806-A2 OR WO-2015013252-A1 OR US-20120157968-A1 OR WO-2011127216-A2 OR WO-2010077980-A1 OR WO-2009154456-A1 OR WO-2007137235-A2 OR WO-2007037554-A1 OR WO-2007008954-A2 OR US-20050288730-A1 OR US-20050240147-A1 OR JP-2001120565-A OR WO-0117450-A1 OR WO-9932041-A1 OR WO-9410921-A1).did. AND DWPI.dbnm.) OR ((WO-2021260435-A1 OR WO-2021205230-A1 OR WO-2021205231-A1 OR WO-2018087601-A1 OR WO-2016183337-					

		A2 OR WO-2016134264-A1 OR EP-2929852-A1 OR WO-2015048806-A2 OR JP-2015507964-A OR WO-2015013252-A1 OR JP-2009538641-A5 OR WO-2010077980-A1 OR WO-2009154456-A1 OR JP-2009538641-A OR JP-2007537784-A5 OR JP-2007537784-A OR WO-2007008954-A2 OR JP-2001526077-A OR JP-2001120565-A OR WO-0117450-A1 OR WO-9410921-A1).did. AND FTDB.dbnm.) OR ((JP-2012143573-A OR JP-2001120565-A).did. AND JPAB.dbnm.) OR ((WO-2010077980-A1 OR WO-2009154456-A1 OR WO-2007008954-A2 OR WO-9410921-A1).did. AND EPAB.dbnm.)					
L8	6607	(A61B18/148 A61B2018/00327 A612018/00434 A61B2018/00583 A61B2018/1467).CPC.	(US-PGPUB; USPAT)	OR	ON	ON	2024/06/20 09:19 AM

PE2E SEARCH - Search History (Interference)

There are no Interference searches to show.

Doc code: IDS
Doc description: Information Disclosure Statement (IDS) Filed

PTO/SB/08a (01-22)
Approved for use through 05/31/2024. OMB 0651-0031
U.S. Patent and Trademark Office; U.S. DEPARTMENT OF COMMERCE
Under the Paperwork Reduction Act of 1995, no persons are required to respond to a collection of information unless it contains a valid OMB control number.

INFORMATION DISCLOSURE STATEMENT BY APPLICANT (Not for submission under 37 CFR 1.99)		
	Application Number	18647755
	Filing Date	2024-04-26
	First Named Inventor	David Townley
	Art Unit	N/A
	Examiner Name	Not Yet Assigned
	Attorney Docket Number	NEURE-008/08US 35242/160

U.S.PATENTS Remove

Examiner Initial*	Cite No	Patent Number	Kind Code[1]	Issue Date	Name of Patentee or Applicant of cited Document	Pages,Columns,Lines where Relevant Passages or Relevant Figures Appear
	1	874178		1907-12-17	LEE DE FOREST	
	2	3117571		1964-01-14	FRY et al.	
	3	3538919		1970-11-10	MEYER ROBERT G	
	4	3941121		1976-03-02	Olinger et al.	
	5	3987795		1976-10-26	Morrison, Charles F.	
	6	4271848		1981-06-09	Turner et al.	
	7	4411266		1983-10-25	Cosman, Eric R.	
	8	4898169		1990-02-06	Norman et al.	

ALL REFERENCES CONSIDERED EXCEPT WHERE LINED THROUGH. /A.M.B./

INFORMATION DISCLOSURE STATEMENT BY APPLICANT (Not for submission under 37 CFR 1.99)		
	Application Number	18647755
	Filing Date	2024-04-26
	First Named Inventor	David Townley
	Art Unit	N/A
	Examiner Name	Not Yet Assigned
	Attorney Docket Number	NEURE-008/08US 35242/160

	9	5184625		1993-02-09	Cottone, Jr. et al.	
	10	5395383		1995-03-07	Adams et al.	
	11	5456662		1995-10-10	Edwards et al.	
	12	5562720		1996-10-08	Stern et al.	
	13	5575788		1996-11-19	Baker et al.	
	14	5588429		1996-12-31	Isaacson et al.	
	15	5697536		1997-12-16	Eggers et al.	
	16	5697882		1997-12-16	Eggers et al.	
	17	5746224		1998-05-05	Edwards	
	18	5766605		1998-06-16	Sanders et al.	
	19	5800429		1998-09-01	Edwards, Stuart D.	

ALL REFERENCES CONSIDERED EXCEPT WHERE LINED THROUGH. /A.M.B./

INFORMATION DISCLOSURE STATEMENT BY APPLICANT (Not for submission under 37 CFR 1.99)		
	Application Number	18647755
	Filing Date	2024-04-26
	First Named Inventor	David Townley
	Art Unit	N/A
	Examiner Name	Not Yet Assigned
	Attorney Docket Number	NEURE-008/08US 35242/160

	20	5823197		1998-10-20	Edwards	
	21	5827277		1998-10-27	Edwards	
	22	5836947		1998-11-17	Fleischman et al.	
	23	5843026		1998-12-01	Edwards et al.	
	24	6033397		2000-03-07	Laufer et al.	
	25	6045532		2000-04-04	Eggers et al.	
	26	6053172		2000-04-25	Hovda et al.	
	27	6063079		2000-05-16	Hovda et al.	
	28	6106518		2000-08-22	Wittenberger et al.	
	29	6139527		2000-10-31	Laufer et al.	
	30	6142991		2000-11-07	Schatzberger, Shaike	

ALL REFERENCES CONSIDERED EXCEPT WHERE LINED THROUGH. /A.M.B./

INFORMATION DISCLOSURE STATEMENT BY APPLICANT (Not for submission under 37 CFR 1.99)		
	Application Number	18647755
	Filing Date	2024-04-26
	First Named Inventor	David Townley
	Art Unit	N/A
	Examiner Name	Not Yet Assigned
	Attorney Docket Number	NEURE-008/08US 35242/160

	31	6273886		2001-08-14	Edwards et al.	
	32	6332880		2001-12-25	Yang et al.	
	33	6352533		2002-03-05	Ellman et al.	
	34	6517534		2003-02-11	McGovern et al.	
	35	6517535		2003-02-11	Edwards, Stuart D.	
	36	6520185		2003-02-18	Bommannan et al.	
	37	6529756		2003-03-04	Phan et al.	
	38	6594518		2003-07-15	Benaron et al.	
	39	6595988		2003-07-22	Wittenberger et al.	
	40	6626899		2003-09-30	Houser et al.	
	41	6652548		2003-11-25	Evans et al.	

ALL REFERENCES CONSIDERED EXCEPT WHERE LINED THROUGH. /A.M.B./

INFORMATION DISCLOSURE STATEMENT BY APPLICANT (Not for submission under 37 CFR 1.99)		
	Application Number	18647755
	Filing Date	2024-04-26
	First Named Inventor	David Townley
	Art Unit	N/A
	Examiner Name	Not Yet Assigned
	Attorney Docket Number	NEURE-008/08US 35242/160

	42	6669689		2003-12-30	Lehmann et al.	
	43	6685648		2004-02-03	Flaherty et al.	
	44	6746474		2004-06-08	Saadat	
	45	7195629		2007-03-27	Behl et al.	
	46	7232458		2007-06-19	Saadat	
	47	7285119		2007-10-23	Stewart et al.	
	48	7500985		2009-03-10	Saadat	
	49	7524318		2009-04-28	Young et al.	
	50	7608275		2009-10-27	Deem et al.	
	51	7654997		2010-02-02	Makower et al.	
	52	7655243		2010-02-02	Deem et al.	

ALL REFERENCES CONSIDERED EXCEPT WHERE LINED THROUGH. /A.M.B./

INFORMATION DISCLOSURE STATEMENT BY APPLICANT (Not for submission under 37 CFR 1.99)		
	Application Number	18647755
	Filing Date	2024-04-26
	First Named Inventor	David Townley
	Art Unit	N/A
	Examiner Name	Not Yet Assigned
	Attorney Docket Number	NEURE-008/08US 35242/160

	53	7758571		2010-07-20	Saadat	
	54	7771409		2010-08-10	Chang et al.	
	55	7803150		2010-09-28	Chang et al.	
	56	8105817		2012-01-31	Deem et al.	
	57	8133497		2012-03-13	Deem et al.	
	58	8231613		2012-07-31	Baxter et al.	
	59	8338164		2012-12-25	Deem et al.	
	60	8372068		2013-02-12	Truckai	
	61	8382746		2013-02-26	Williams et al.	
	62	8460181		2013-06-11	Saadat et al.	
	63	8463359		2013-06-11	Saadat et al.	

ALL REFERENCES CONSIDERED EXCEPT WHERE LINED THROUGH. /A.M.B./

INFORMATION DISCLOSURE STATEMENT BY APPLICANT (Not for submission under 37 CFR 1.99)		
	Application Number	18647755
	Filing Date	2024-04-26
	First Named Inventor	David Townley
	Art Unit	N/A
	Examiner Name	Not Yet Assigned
	Attorney Docket Number	NEURE-008/08US 35242/160

	64	8512324		2013-08-20	Abboud et al.	
	65	8636684		2014-01-28	Deem et al.	
	66	8747401		2014-06-10	Gonzalez et al.	
	67	8920414		2014-12-30	Stone et al.	
	68	8936594		2015-01-20	Wolf et al.	
	69	8939970		2015-01-27	Stone et al.	
	70	8961391		2015-02-24	Deem et al.	
	71	8986301		2015-03-24	Wolf et al.	
	72	8996137		2015-03-31	Ackermann et al.	
	73	9055965		2015-06-16	Chang et al.	
	74	9072597		2015-07-07	Wolf et al.	

ALL REFERENCES CONSIDERED EXCEPT WHERE LINED THROUGH. /A.M.B./

INFORMATION DISCLOSURE STATEMENT BY APPLICANT (Not for submission under 37 CFR 1.99)		
	Application Number	18647755
	Filing Date	2024-04-26
	First Named Inventor	David Townley
	Art Unit	N/A
	Examiner Name	Not Yet Assigned
	Attorney Docket Number	NEURE-008/08US 35242/160

	75	9101384		2015-08-11	Makower et al.	
	76	9179964		2015-11-10	Wolf et al.	
	77	9179967		2015-11-10	Wolf et al.	
	78	9179973		2015-11-10	Nabutovsky et al.	
	79	9233245	B2	2016-01-12	Lamensdorf et al.	
	80	9237924		2016-01-19	Wolf et al.	
	81	9333023		2016-05-10	Wittenberger	
	82	9370649		2016-06-21	Chang et al.	
	83	9415194		2016-08-16	Wolf et al.	
	84	9433463		2016-09-06	Wolf et al.	
	85	9440065		2016-09-13	Ackermann et al.	

ALL REFERENCES CONSIDERED EXCEPT WHERE LINED THROUGH. /A.M.B./

INFORMATION DISCLOSURE STATEMENT BY APPLICANT (Not for submission under 37 CFR 1.99)		
	Application Number	18647755
	Filing Date	2024-04-26
	First Named Inventor	David Townley
	Art Unit	N/A
	Examiner Name	Not Yet Assigned
	Attorney Docket Number	NEURE-008/08US 35242/160

	86	9452010		2016-09-27	Wolf et al.	
	87	9486278		2016-11-08	Wolf et al.	
	88	9498278		2016-11-22	Couture et al.	
	89	9498283		2016-11-22	Deem et al.	
	90	9526571		2016-12-27	Wolf et al.	
	91	9649156		2017-05-16	Jenson et al.	
	92	9655667		2017-05-23	Hon	
	93	9687288		2017-06-27	Saadat	
	94	9687296		2017-06-27	Wolf et al.	
	95	9700707		2017-07-11	Deem et al.	
	96	9737702		2017-08-22	Ackermann et al.	

ALL REFERENCES CONSIDERED EXCEPT WHERE LINED THROUGH. /A.M.B./

INFORMATION DISCLOSURE STATEMENT BY APPLICANT (Not for submission under 37 CFR 1.99)		
	Application Number	18647755
	Filing Date	2024-04-26
	First Named Inventor	David Townley
	Art Unit	N/A
	Examiner Name	Not Yet Assigned
	Attorney Docket Number	NEURE-008/08US 35242/160

	97	9763723		2017-09-19	Saadat	
	98	9763743		2017-09-19	Lin et al.	
	99	9788886		2017-10-17	Wolf et al.	
	100	9801752		2017-10-31	Wolf et al.	
	101	9888957		2018-02-13	Wolf et al.	
	102	9913682		2018-03-13	Wolf et al.	
	103	9943361		2018-04-17	Wolf et al.	
	104	10022529		2018-07-17	Deem et al.	
	105	10028780		2018-07-24	Wolf et al.	
	106	10028781		2018-07-24	Saadat	
	107	10052465		2018-08-21	Deem et al.	

ALL REFERENCES CONSIDERED EXCEPT WHERE LINED THROUGH. /A.M.B./

INFORMATION DISCLOSURE STATEMENT BY APPLICANT (Not for submission under 37 CFR 1.99)		
	Application Number	18647755
	Filing Date	2024-04-26
	First Named Inventor	David Townley
	Art Unit	N/A
	Examiner Name	Not Yet Assigned
	Attorney Docket Number	NEURE-008/08US 35242/160

	108	10155108		2018-12-18	Ackermann et al.	
	109	10159538		2018-12-25	Lin et al.	
	110	10201687		2019-02-12	Saadat	
	111	10238861		2019-03-26	Ackermann et al.	
	112	10252048		2019-04-09	Loudin et al.	
	113	10265115		2019-04-23	Wolf et al.	
	114	10307200		2019-06-04	Saadat	
	115	10335221		2019-07-02	Wolf et al.	
	116	10363094		2019-07-30	Brannan et al.	
	117	10376300		2019-08-13	Wolf et al.	
	118	10398489		2019-09-03	Wolf et al.	

ALL REFERENCES CONSIDERED EXCEPT WHERE LINED THROUGH. /A.M.B./

INFORMATION DISCLOSURE STATEMENT BY APPLICANT (Not for submission under 37 CFR 1.99)		
	Application Number	18647755
	Filing Date	2024-04-26
	First Named Inventor	David Townley
	Art Unit	N/A
	Examiner Name	Not Yet Assigned
	Attorney Docket Number	NEURE-008/08US 35242/160

	119	10448985		2019-10-22	Saadat	
	120	10456185		2019-10-29	Wolf et al.	
	121	10456186		2019-10-29	Wolf et al.	
	122	10485603		2019-11-26	Wolf et al.	
	123	10588682		2020-03-17	Kelly et al.	
	124	10610675		2020-04-07	Deem et al.	
	125	10687883		2020-06-23	Aklog et al.	
	126	10695557		2020-06-30	Townley et al.	
	127	10729897		2020-08-04	Deem et al.	
	128	10894011		2021-01-19	Deem et al.	
	129	11033318		2021-06-15	Wolf et al.	

ALL REFERENCES CONSIDERED EXCEPT WHERE LINED THROUGH. /A.M.B./

INFORMATION DISCLOSURE STATEMENT BY APPLICANT (Not for submission under 37 CFR 1.99)		
	Application Number	18647755
	Filing Date	2024-04-26
	First Named Inventor	David Townley
	Art Unit	N/A
	Examiner Name	Not Yet Assigned
	Attorney Docket Number	NEURE-008/08US 35242/160

	130	11241271		2022-02-08	Wolf et al.	
	131	11304746		2022-04-19	Wolf et al.	
	132	11679077		2023-06-20	Deem et al.	
	133	11766286		2023-09-26	Wolf et al.	

If you wish to add additional U.S. Patent citation information please click the Add button. Add

U.S.PATENT APPLICATION PUBLICATIONS Remove

Examiner Initial*	Cite No	Publication Number	Kind Code[1]	Publication Date	Name of Patentee or Applicant of cited Document	Pages,Columns,Lines where Relevant Passages or Relevant Figures Appear
	1	20020068930	A1	2002-06-06	Tasto et al.	
	2	20020072742	A1	2002-06-13	Schaefer et al.	
	3	20020177765	A1	2002-11-28	Bowe et al.	
	4	20030016085	A1	2003-01-23	Yamazaki	
	5	20030212394	A1	2003-11-13	Pearson et al.	

ALL REFERENCES CONSIDERED EXCEPT WHERE LINED THROUGH. /A.M.B./

INFORMATION DISCLOSURE STATEMENT BY APPLICANT (Not for submission under 37 CFR 1.99)		
	Application Number	18647755
	Filing Date	2024-04-26
	First Named Inventor	David Townley
	Art Unit	N/A
	Examiner Name	Not Yet Assigned
	Attorney Docket Number	NEURE-008/08US 35242/160

	6	20050080409	A1	2005-04-14	Young et al.	
	7	20050171536	A1	2005-08-04	Phan et al.	
	8	20050171574	A1	2005-08-04	Rubinsky et al.	
	9	20050171582	A1	2005-08-04	Matlock	
	10	20050171583	A1	2005-08-04	Mosher et al.	
	11	20050187546	A1	2005-08-25	Bek et al.	
	12	20050240147	A1	2005-10-27	Makower et al.	
	13	20050283148	A1	2005-12-22	Janssen et al.	
	14	20050288730	A1	2005-12-29	Deem et al.	
	15	20060036237	A1	2006-02-16	Davison et al.	
	16	20060055942	A1	2006-03-16	Krattiger, Beat	

ALL REFERENCES CONSIDERED EXCEPT WHERE LINED THROUGH. /A.M.B./

INFORMATION DISCLOSURE STATEMENT BY APPLICANT (Not for submission under 37 CFR 1.99)		
	Application Number	18647755
	Filing Date	2024-04-26
	First Named Inventor	David Townley
	Art Unit	N/A
	Examiner Name	Not Yet Assigned
	Attorney Docket Number	NEURE-008/08US 35242/160

	17	20060100620	A1	2006-05-11	Daniel et al.	
	18	20060106375	A1	2006-05-18	Werneth et al.	
	19	20060116599	A1	2006-06-01	Davis, Grant E.	
	20	20060149226	A1	2006-07-06	McCullagh et al.	
	21	20060247683	A1	2006-11-02	Danek et al.	
	22	20070006975	A1	2007-01-11	Corghi, Remo	
	23	20070031341	A1	2007-02-08	DiMauro et al.	
	24	20070032786	A1	2007-02-08	Francischelli, David E.	
	25	20070083194	A1	2007-04-12	Kunis et al.	
	26	20070083195	A1	2007-04-12	Werneth et al.	
	27	20070093803	A1	2007-04-26	Dalbec et al.	

ALL REFERENCES CONSIDERED EXCEPT WHERE LINED THROUGH. /A.M.B./

INFORMATION DISCLOSURE STATEMENT BY APPLICANT (Not for submission under 37 CFR 1.99)		
	Application Number	18647755
	Filing Date	2024-04-26
	First Named Inventor	David Townley
	Art Unit	N/A
	Examiner Name	Not Yet Assigned
	Attorney Docket Number	NEURE-008/08US 35242/160

	28	20070129760	A1	2007-06-07	Demarais et al.	
	29	20070173760	A1	2007-07-26	Fedenia et al.	
	30	20070219600	A1	2007-09-20	Gertner et al.	
	31	20070233191	A1	2007-10-04	Parmer, Jonathan B.	
	32	20070265608	A1	2007-11-15	Hernandez, Lyndon V.	
	33	20070287994	A1	2007-12-13	Patel, Pankaj Amrit	
	34	20070299433	A1	2007-12-27	Williams et al.	
	35	20080021369	A1	2008-01-24	Deem et al.	
	36	20080154250	A1	2008-06-26	Makower et al.	
	37	20080287908	A1	2008-11-20	Muni et al.	
	38	20090198216	A1	2009-08-06	Muni et al.	

ALL REFERENCES CONSIDERED EXCEPT WHERE LINED THROUGH. /A.M.B./

INFORMATION DISCLOSURE STATEMENT BY APPLICANT (Not for submission under 37 CFR 1.99)		
	Application Number	18647755
	Filing Date	2024-04-26
	First Named Inventor	David Townley
	Art Unit	N/A
	Examiner Name	Not Yet Assigned
	Attorney Docket Number	NEURE-008/08US 35242/160

	39	20090306644	A1	2009-12-10	Mayse et al.	
	40	20090318914	A1	2009-12-24	Utley et al.	
	41	20100049187	A1	2010-02-25	Carlton et al.	
	42	20100057048	A1	2010-03-04	Eldredge	
	43	20100168737	A1	2010-07-01	Grunewald	
	44	20100204560	A1	2010-08-12	Salahieh et al.	
	45	20100305715	A1	2010-12-02	Mathis et al.	
	46	20110004207	A1	2011-01-06	Wallace et al.	
	47	20110152855	A1	2011-06-23	Mayse et al.	
	48	20110238057	A1	2011-09-29	Moss et al.	
	49	20110264086	A1	2011-10-27	Ingle	

ALL REFERENCES CONSIDERED EXCEPT WHERE LINED THROUGH. /A.M.B./

INFORMATION DISCLOSURE STATEMENT BY APPLICANT (Not for submission under 37 CFR 1.99)		
	Application Number	18647755
	Filing Date	2024-04-26
	First Named Inventor	David Townley
	Art Unit	N/A
	Examiner Name	Not Yet Assigned
	Attorney Docket Number	NEURE-008/08US 35242/160

	50	20120078377	A1	2012-03-29	Gonzales et al.	
	51	20120191003		2012-07-26	Robert Garabedian	
	52	20120259326	A1	2012-10-11	Brannan et al.	
	53	20120323214	A1	2012-12-20	Shantha	
	54	20120323227	A1	2012-12-20	Wolf et al.	
	55	20120323232	A1	2012-12-20	Wolf et al.	
	56	20130018367	A1	2013-01-17	Wu et al.	
	57	20130123778	A1	2013-05-16	RICHARDSON et al.	
	58	20130158475	A1	2013-06-20	Xia et al.	
	59	20130165916	A1	2013-06-27	MATHUR et al.	
	60	20130172877		2013-07-04	Boston Scientific Scimed, Inc.	

ALL REFERENCES CONSIDERED EXCEPT WHERE LINED THROUGH. /A.M.B./

INFORMATION DISCLOSURE STATEMENT BY APPLICANT (Not for submission under 37 CFR 1.99)		
	Application Number	18647755
	Filing Date	2024-04-26
	First Named Inventor	David Townley
	Art Unit	N/A
	Examiner Name	Not Yet Assigned
	Attorney Docket Number	NEURE-008/08US 35242/160

	61	20130178910	A1	2013-07-11	Azamian et al.	
	62	20130253387	A1	2013-09-26	Bonutti et al.	
	63	20130253389	A1	2013-09-26	JUTO et al.	
	64	20130282084	A1	2013-10-24	Mathur et al.	
	65	20130289552	A1	2013-10-31	Young, Kimbolt	
	66	20140005706	A1	2014-01-02	Gelfand et al.	
	67	20140018792	A1	2014-01-16	Gang et al.	
	68	20140025069	A1	2014-01-23	WILLARD et al.	
	69	20140074091	A1	2014-03-13	ARYA et al.	
	70	20140100557	A1	2014-04-10	Bohner et al.	
	71	20140114233	A1	2014-04-24	Deem et al.	

ALL REFERENCES CONSIDERED EXCEPT WHERE LINED THROUGH. /A.M.B./

INFORMATION DISCLOSURE STATEMENT BY APPLICANT (Not for submission under 37 CFR 1.99)		
	Application Number	18647755
	Filing Date	2024-04-26
	First Named Inventor	David Townley
	Art Unit	N/A
	Examiner Name	Not Yet Assigned
	Attorney Docket Number	NEURE-008/08US 35242/160

	72	20140180196	A1	2014-06-26	STONE et al.	
	73	20140200581	A1	2014-07-17	Aluru et al.	
	74	20140243793	A1	2014-08-28	Morriss et al.	
	75	20140276752	A1	2014-09-18	WANG et al.	
	76	20140303665	A1	2014-10-09	Gerrans et al.	
	77	20150006606	A1	2015-01-01	Fleury et al.	
	78	20150018818	A1	2015-01-15	WILLARD et al.	
	79	20150031946	A1	2015-01-29	SAADAT et al.	
	80	20150066006	A1	2015-03-05	Srivastava	
	81	20150112321	A1	2015-04-23	Cadouri	
	82	20150119881	A1	2015-04-30	BAGLEY et al.	

ALL REFERENCES CONSIDERED EXCEPT WHERE LINED THROUGH. /A.M.B./

INFORMATION DISCLOSURE STATEMENT BY APPLICANT (Not for submission under 37 CFR 1.99)		
	Application Number	18647755
	Filing Date	2024-04-26
	First Named Inventor	David Townley
	Art Unit	N/A
	Examiner Name	Not Yet Assigned
	Attorney Docket Number	NEURE-008/08US 35242/160

	83	20150150624	A1	2015-06-04	Petersohn	
	84	20150164571	A1	2015-06-18	SAADAT	
	85	20150182282	A1	2015-07-02	Zemel et al.	
	86	20150202003	A1	2015-07-23	WOLF et al.	
	87	20150257754	A1	2015-09-17	WENG et al.	
	88	20150257824	A1	2015-09-17	Mauch	
	89	20150257825	A1	2015-09-17	Kelly et al.	
	90	20150265812	A1	2015-09-24	LALONDE	
	91	20150289750	A1	2015-10-15	Stigall et al.	
	92	20150297282	A1	2015-10-22	CADOURI	
	93	20150313669	A1	2015-11-05	Darmos et al.	

ALL REFERENCES CONSIDERED EXCEPT WHERE LINED THROUGH. /A.M.B./

INFORMATION DISCLOSURE STATEMENT BY APPLICANT (Not for submission under 37 CFR 1.99)		
	Application Number	18647755
	Filing Date	2024-04-26
	First Named Inventor	David Townley
	Art Unit	N/A
	Examiner Name	Not Yet Assigned
	Attorney Docket Number	NEURE-008/08US 35242/160

	94	20150351836	A1	2015-12-10	PRUTCHI	
	95	20160008053	A1	2016-01-14	MATHUR et al.	
	96	20160015450	A1	2016-01-21	WOLF et al.	
	97	20160045277	A1	2016-02-18	LIN et al.	
	98	20160120598	A1	2016-05-05	Brink et al.	
	99	20160128767	A1	2016-05-12	Azamian et al.	
	100	20160250474	A1	2016-09-01	Stack et al.	
	101	20160287315	A1	2016-10-06	Wolf et al.	
	102	20160331459	A1	2016-11-17	Townley et al.	
	103	20160354136	A1	2016-12-08	Saadat	
	104	20170071494	A1	2017-03-16	Solis et al.	

ALL REFERENCES CONSIDERED EXCEPT WHERE LINED THROUGH. /A.M.B./

INFORMATION DISCLOSURE STATEMENT BY APPLICANT (Not for submission under 37 CFR 1.99)		
	Application Number	18647755
	Filing Date	2024-04-26
	First Named Inventor	David Townley
	Art Unit	N/A
	Examiner Name	Not Yet Assigned
	Attorney Docket Number	NEURE-008/08US 35242/160

	105	20170095252	A1	2017-04-06	Smith et al.	
	106	20170095288	A1	2017-04-06	Wolf et al.	
	107	20170151014	A1	2017-06-01	Perfler	
	108	20170209199	A1	2017-07-27	Wolf et al.	
	109	20170215950	A1	2017-08-03	GROSS et al.	
	110	20170215952	A1	2017-08-03	Nair	
	111	20170231474	A1	2017-08-17	Saadat et al.	
	112	20170231651	A1	2017-08-17	DINGER et al.	
	113	20170245924	A1	2017-08-31	WOLF et al.	
	114	20170252089	A1	2017-09-07	Hester et al.	
	115	20170252100	A1	2017-09-07	WOLF et al.	

ALL REFERENCES CONSIDERED EXCEPT WHERE LINED THROUGH. /A.M.B./

INFORMATION DISCLOSURE STATEMENT BY APPLICANT (Not for submission under 37 CFR 1.99)		
	Application Number	18647755
	Filing Date	2024-04-26
	First Named Inventor	David Townley
	Art Unit	N/A
	Examiner Name	Not Yet Assigned
	Attorney Docket Number	NEURE-008/08US 35242/160

	116	20170266422	A1	2017-09-21	Deem et al.	
	117	20170312021	A1	2017-11-02	Pilcher et al.	
	118	20180042471	A1	2018-02-15	Chandler et al.	
	119	20180049802	A1	2018-02-22	YANG et al.	
	120	20180063678	A1	2018-03-01	Zhu et al.	
	121	20180078327	A1	2018-03-22	Lin et al.	
	122	20180103994	A1	2018-04-19	Fox et al.	
	123	20180125560	A1	2018-05-10	Saadat et al.	
	124	20180133460	A1	2018-05-17	Townley et al.	
	125	20180153375	A1	2018-06-07	Saadat et al.	
	126	20180161577	A1	2018-06-14	Goedeke et al.	

ALL REFERENCES CONSIDERED EXCEPT WHERE LINED THROUGH. /A.M.B./

INFORMATION DISCLOSURE STATEMENT BY APPLICANT (Not for submission under 37 CFR 1.99)		
	Application Number	18647755
	Filing Date	2024-04-26
	First Named Inventor	David Townley
	Art Unit	N/A
	Examiner Name	Not Yet Assigned
	Attorney Docket Number	NEURE-008/08US 35242/160

	127	20180168503	A1	2018-06-21	Waldhauser et al.	
	128	20180169414	A1	2018-06-21	Goedeke et al.	
	129	20180177542	A1	2018-06-28	WOLF et al.	
	130	20180177546	A1	2018-06-28	DINGER et al.	
	131	20180185085	A1	2018-07-05	Wolf et al.	
	132	20180228533	A1	2018-08-16	WOLF et al.	
	133	20180317993	A1	2018-11-08	Saadat	
	134	20180317997	A1	2018-11-08	DINGER et al.	
	135	20180344378	A1	2018-12-06	WOLF et al.	
	136	20180344411	A1	2018-12-06	Fahey et al.	
	137	20190069949	A1	2019-03-07	Vrba et al.	

ALL REFERENCES CONSIDERED EXCEPT WHERE LINED THROUGH. /A.M.B./

INFORMATION DISCLOSURE STATEMENT BY APPLICANT (Not for submission under 37 CFR 1.99)		
	Application Number	18647755
	Filing Date	2024-04-26
	First Named Inventor	David Townley
	Art Unit	N/A
	Examiner Name	Not Yet Assigned
	Attorney Docket Number	NEURE-008/08US 35242/160

	138	20190076185	A1	2019-03-14	DINGER et al.	
	139	20190083157	A1	2019-03-21	Saadat	
	140	20190175242	A1	2019-06-13	WOLF et al.	
	141	20190223944	A1	2019-07-25	Coates	
	142	20190231409	A1	2019-08-01	WOLF et al.	
	143	20190231429	A1	2019-08-01	Townley et al.	
	144	20190239953	A1	2019-08-08	Townley et al.	
	145	20190239954	A1	2019-08-08	Townley et al.	
	146	20190239955	A1	2019-08-08	Townley et al.	
	147	20190239956	A1	2019-08-08	Townley et al.	
	148	20190239957	A1	2019-08-08	Townley et al.	

ALL REFERENCES CONSIDERED EXCEPT WHERE LINED THROUGH. /A.M.B./

INFORMATION DISCLOSURE STATEMENT BY APPLICANT (Not for submission under 37 CFR 1.99)		
	Application Number	18647755
	Filing Date	2024-04-26
	First Named Inventor	David Townley
	Art Unit	N/A
	Examiner Name	Not Yet Assigned
	Attorney Docket Number	NEURE-008/08US 35242/160

	149	20190282289	A1	2019-09-19	WOLF et al.	
	150	20190314620	A1	2019-10-17	Chang et al.	
	151	20200078134	A1	2020-03-12	Loyd et al.	
	152	20200086112	A1	2020-03-19	Townley et al.	
	153	20200107882	A1	2020-04-09	Townley et al.	
	154	20200129223	A1	2020-04-30	Angeles et al.	
	155	20200289185	A1	2020-09-17	FORSYTH et al.	
	156	20210315627	A1	2021-10-14	BABKIN et al.	

If you wish to add additional U.S. Published Application citation information please click the Add button. Add

FOREIGN PATENT DOCUMENTS Remove

Examiner Initial*	Cite No	Foreign Document Number[3]	Country Code[2] ¡	Kind Code[4]	Publication Date	Name of Patentee or Applicant of cited Document	Pages,Columns,Lines where Relevant Passages or Relevant Figures Appear	T[5]
	1	2929852	EP	A1	2015-10-14	Holaira, Inc		☐

EFS Web 2.1.18

ALL REFERENCES CONSIDERED EXCEPT WHERE LINED THROUGH. /A.M.B./

INFORMATION DISCLOSURE STATEMENT BY APPLICANT (Not for submission under 37 CFR 1.99)		
	Application Number	18647755
	Filing Date	2024-04-26
	First Named Inventor	David Townley
	Art Unit	N/A
	Examiner Name	Not Yet Assigned
	Attorney Docket Number	NEURE-008/08US 35242/160

	2	2001-120565	JP	A	2001-05-08	Olympus Optical Co		☒
	3	2001-526077	JP	A	2001-12-18	Somnus Medical Technologies Inc		☒
	4	2007/537784	JP	A	2007-12-27	Acclarent, Inc.		☒
	5	2009-538641	JP	A	2009-11-12	THE FOUNDRY, LLC		☒
	6	2012-143573	JP	A	2012-08-02	Medtronic Ardian Luxembourg Sarl		☒
	7	2015-507964	JP	A	2015-03-16	DOLOR TECHNOLOGIES, LLC		☒
	8	2018-515314	JP	A	2018-06-14	National University of Ireland Galway NUI		☒
	9	01/17450	WO	A1	2001-03-15	Curon Medical, Inc		☐
	10	2007/008954	WO	A2	2007-01-18	Ablation Frontiers		☐
	11	2009/154456	WO	A1	2009-12-23	Kerphos B V		☐
	12	2010/077980	WO	A1	2010-07-08	Aardvark Medical, Inc		☐

ALL REFERENCES CONSIDERED EXCEPT WHERE LINED THROUGH. /A.M.B./

INFORMATION DISCLOSURE STATEMENT BY APPLICANT (Not for submission under 37 CFR 1.99)		
	Application Number	18647755
	Filing Date	2024-04-26
	First Named Inventor	David Townley
	Art Unit	N/A
	Examiner Name	Not Yet Assigned
	Attorney Docket Number	NEURE-008/08US 35242/160

	13	2015/013252	WO	A1	2015-01-29	Wedge Therapeutics, LLC		☐
	14	2015/048806	WO	A2	2015-04-02	Nidus Medical, LLC		☐
	15	2016/134264	WO	A1	2016-08-25	Boston Scient Scimed Inc		☐
	16	2016/183337	WO	A2	2016-11-17	Nat Univ Ireland Galway		☐
	17	2018/087601	WO	A1	2018-05-17	National University Of Ireland, Galway		☐
	18	2021/205230	WO	A1	2021-10-14	Neurent Medical Ltd		☐
	19	2021/205231	WO	A1	2021-10-14	Neurent Medical Ltd		☐
	20	2021/260435	WO	A1	2021-12-30	Neurent Medical Ltd		☐
	21	94/10921	WO	A1	1994-05-26	Ep Technologies, Inc		☐

If you wish to add additional Foreign Patent Document citation information please click the Add button Add

NON-PATENT LITERATURE DOCUMENTS Remove

Examiner Initials*	Cite No	Include name of the author (in CAPITAL LETTERS), title of the article (when appropriate), title of the item (book, magazine, journal, serial, symposium, catalog, etc), date, pages(s), volume-issue number(s), publisher, city and/or country where published.	T[5]

ALL REFERENCES CONSIDERED EXCEPT WHERE LINED THROUGH. /A.M.B./

INFORMATION DISCLOSURE STATEMENT BY APPLICANT (Not for submission under 37 CFR 1.99)		
	Application Number	18647755
	Filing Date	2024-04-26
	First Named Inventor	David Townley
	Art Unit	N/A
	Examiner Name	Not Yet Assigned
	Attorney Docket Number	NEURE-008/08US 35242/160

	1	Annotated Perfler Fig 11 (2022)	☐
	2	Anonymous: Flexible electronics - Wikipedia, 8 August 202, pages 1-9	☐
	3	Arora, 1980, Cryodestruction of Vidian Nerve Branches, Indian Journal of Otolaryngology, 32(3):80-82	☐
	4	Chen, 2005, Radiofrequency treatment of nasal posterior-under nerve ethmoidal nerve and infraturbinal for perennial allergic rhinitis under nasal endoscope, China Journal of Endoscopy, 11(3):239-243	☐
	5	Fang, 2005, Nasal endoscopy combined with multiple radiofrequency for perennial allergic rhinitis, J. First Mil. Medic Univ., 25(7):876-877	☐
	6	Horesh, 2006, Some novel approaches in modelling and image reconstruction for multi-frequency Electrical Impedance Tomography of the human brain, Thesis (Ph.D.)--University of London, University College London (United Kingdom), 2006.; Publication Number: AAT U592053	☐
	7	Ikeda, 2008, Effect of resection of the posterior nasal nerve on functional and morphological changes in the inferior turbinate mucosa, Acta Oto-Laryngologica, 128, pages 1337-1341	☐
	8	International Search Report and Written Opinion for International Application No. PCT/US2016/032132, filed May 12, 2016, Applicant: NATIONAL UNIVERSITY OF IRELAND, GALWAY, Date of Mailing: November 14, 2016, 26 pages	☐
	9	International Search Report and Written Opinion issued in International Application No. PCT/IB2017/001541, date of mailing: April 3, 2018, 15 pages	☐
	10	International Search Report and Written Opinion issued in International Application No. PCT/IB2019/001298, date of mailing May 12, 2020, 15 pages	☐
	11	International Search Report and Written Opinion issued in International Application No. PCT/IB2020/000544, date of mailing January 11, 2021, 15 pages	☐

ALL REFERENCES CONSIDERED EXCEPT WHERE LINED THROUGH. /A.M.B./

INFORMATION DISCLOSURE STATEMENT BY APPLICANT (Not for submission under 37 CFR 1.99)		
	Application Number	18647755
	Filing Date	2024-04-26
	First Named Inventor	David Townley
	Art Unit	N/A
	Examiner Name	Not Yet Assigned
	Attorney Docket Number	NEURE-008/08US 35242/160

	12	International Search Report and Written Opinion issued in International Application No. PCT/IB2021/000234, date of mailing: August 6, 2021, 14 pages	☐
	13	International Search Report and Written Opinion issued in International Application No. PCT/IB2021/000243, date of mailing: August 25, 2021, 15 pages	☐
	14	International Search Report and Written Opinion issued in International Application No. PCT/IB2021/000597, date of mailing: January 22, 2022, 18 pages	☐
	15	International Search Report and Written Opinion issued in International Application No. PCT/IB2021/000667, date of mailing: February 2, 2022, 17 pages	☐
	16	International Search Report and Written Opinion issued in International Application No. PCT/IB2021/000699, date mailing: February 4, 2022, 28 pages	☐
	17	International Search Report and Written Opinion issued in International Application No. PCT/IB2021/000700, date of mailing: April 4, 2022, 20 pages	☐
	18	Kanaya, 2009, Endoscopic posterior nasal neurectomy: an alternative to Vidian neurectomy, Clinical and Experimental Allergy Reviews, pages 24-27	☐
	19	Kanaya, 2009, Endoscopic posterior nasal neurectomy: an alternative to Vidian neurectomy, Clinical and Experimental Allergy Reviews, pages 24-27	☐
	20	Kikawada, 2007, Endoscopic posterior nasal neurectomy: An alternative to vidian neurectomy, Operative Techniques in Otolaryngology, 18(4), 5 pages	☐
	21	Kikawada, 2007, Endoscopic posterior nasal neurectomy: An alternative to vidian neurectomy, Operative Techniques in Otolaryngology, 18(4), 5 pages	☐
	22	Kobayashi, 2012, Resection of peripheral branches of the posterior nasal nerve compared to conventional posterior neuectomy in severe allergic rhinitis, Auris Nasus Larynx, 39 (2012):593-596	☐

ALL REFERENCES CONSIDERED EXCEPT WHERE LINED THROUGH. /A.M.B./

INFORMATION DISCLOSURE STATEMENT BY APPLICANT (Not for submission under 37 CFR 1.99)		
	Application Number	18647755
	Filing Date	2024-04-26
	First Named Inventor	David Townley
	Art Unit	N/A
	Examiner Name	Not Yet Assigned
	Attorney Docket Number	NEURE-008/08US 35242/160

	23	Kobayashi, 2012, Resection of peripheral branches of the posterior nasal nerve compared to conventional posterior neuectomy in severe allergic rhinitis, Auris Nasus Larynx, 39 (2012):593-596	☐
	24	Kong, 2005, Low-temperature plasma ablation of inferior turbinate for the treatment of perennial allergic rhinitis, 19:5 J Clin Otorhinolaryngol (China), 19:5:214	☐
	25	Lane, 2004, Nasal anatomy and physiology, Facial Plast Surg Clin North Am., 12(4):387-395	☐
	26	Lee, 2003, Sampling and Reconstruction, In: Structure and Interpretation of Singals and Systems, Reading, MA: Addison-Wesley, ISBN: 0-201-74551-8, Pearson Education, Inc., pp. 373-392	☐
	27	Liang, 1999, Radiofrequency treatment of ethmoidal nerve with allergic rhinitis under nasal endoscopy, J. Clin Otorhinolaryngol, 13(8):341-342	☐
	28	Lin, 2003, Radiofrequency for the treatment of allergic rhinits refactory to medical therapy, The Laryngoscope, 113, pages 673-678	☐
	29	Lin, 2003, Radiofrequency for the treatment of allergic rhinits refactory to medical therapy, The Laryngoscope, 113, pages 673-678	☐
	30	Lin, 2010, Long-term results of radiofrequency turbinoplasty for allergic rhinits refactor to medical therapy, Arch Otolaryngol Head Neck Surg, 136(9) 4 pages	☐
	31	Lin, 2010, Long-term results of radiofrequency turbinoplasty for allergic rhinits refactor to medical therapy, Arch Otolaryngol Head Neck Surg, 136(9) 4 pages	☐
	32	Min, 2015, Impedance Detection, In: Li, D. (eds) Encyclopedia of Microfluidics and Nanofluidics, Springer, New York, NY, https://doi.org/10.1007/978-1-4614-5491-5_1783, pp. 1333-1472	☐
	33	Neubauer, 2022, Endothelial cells and coagulation, Cell Tissue Res, 387:391-398	☐

ALL REFERENCES CONSIDERED EXCEPT WHERE LINED THROUGH. /A.M.B./

INFORMATION DISCLOSURE STATEMENT BY APPLICANT (Not for submission under 37 CFR 1.99)		
	Application Number	18647755
	Filing Date	2024-04-26
	First Named Inventor	David Townley
	Art Unit	N/A
	Examiner Name	Not Yet Assigned
	Attorney Docket Number	NEURE-008/08US 35242/160

	34	Ozenbeger, 1970, Cryosurgery in chronic rhinitis, The Laryngoscope, vol. 8, issue 5, pp. 723-734	☐
	35	Ozenberger, 1973, Cryosurgery for the treatment of chronic rhinitis, The Laryngoscope, vol. 83, issue 4, pp. 508-516	☐
	36	Ozenberger, 1973, Cryosurgery for the treatment of chronic rhinitis, The Laryngoscope, vol. 83, issue 4, pp. 508-516	☐
	37	Paterno, 2009, Frequency-dpmain reconstruction of singals in electrical bioimpedance spectroscopy, Med Biol Eng Comput, 47(10):1093-1102	☐
	38	Yang, 2014, Electrical Impedance Tomography: Algorithms and Application, University of Bath, 143 pages	☐

If you wish to add additional non-patent literature document citation information please click the Add button Add

EXAMINER SIGNATURE

Examiner Signature	/ABIGAIL BOCK/	Date Considered	06/17/2024

*EXAMINER: Initial if reference considered, whether or not citation is in conformance with MPEP 609. Draw line through a citation if not in conformance and not considered. Include copy of this form with next communication to applicant.

[1] See Kind Codes of USPTO Patent Documents at www.USPTO.GOV or MPEP 901.04. [2] Enter office that issued the document, by the two-letter code (WIPO Standard ST.3). [3] For Japanese patent documents, the indication of the year of the reign of the Emperor must precede the serial number of the patent document. [4] Kind of document by the appropriate symbols as indicated on the document under WIPO Standard ST.16 if possible. [5] Applicant is to place a check mark here if English language translation is attached.

ALL REFERENCES CONSIDERED EXCEPT WHERE LINED THROUGH. /A.M.B./

INFORMATION DISCLOSURE STATEMENT BY APPLICANT (Not for submission under 37 CFR 1.99)		
	Application Number	18647755
	Filing Date	2024-04-26
	First Named Inventor	David Townley
	Art Unit	N/A
	Examiner Name	Not Yet Assigned
	Attorney Docket Number	NEURE-008/08US 35242/160

CERTIFICATION STATEMENT

Please see 37 CFR 1.97 and 1.98 to make the appropriate selection(s):

☐ That each item of information contained in the information disclosure statement was first cited in any communication from a foreign patent office in a counterpart foreign application not more than three months prior to the filing of the information disclosure statement. See 37 CFR 1.97(e)(1).

OR

☐ That no item of information contained in the information disclosure statement was cited in a communication from a foreign patent office in a counterpart foreign application, and, to the knowledge of the person signing the certification after making reasonable inquiry, no item of information contained in the information disclosure statement was known to any individual designated in 37 CFR 1.56(c) more than three months prior to the filing of the information disclosure statement. See 37 CFR 1.97(e)(2).

☐ See attached certification statement.

☐ The fee set forth in 37 CFR 1.17 (p) has been submitted herewith.

☒ A certification statement is not submitted herewith.

SIGNATURE

A signature of the applicant or representative is required in accordance with CFR 1.33, 10.18. Please see CFR 1.4(d) for the form of the signature.

Signature	/Matthew P. York/	Date (YYYY-MM-DD)	2024-05-01
Name/Print	Matthew P. York	Registration Number	66,470

This collection of information is required by 37 CFR 1.97 and 1.98. The information is required to obtain or retain a benefit by the public which is to file (and by the USPTO to process) an application. Confidentiality is governed by 35 U.S.C. 122 and 37 CFR 1.14. This collection is estimated to take 1 hour to complete, including gathering, preparing and submitting the completed application form to the USPTO. Time will vary depending upon the individual case. Any comments on the amount of time you require to complete this form and/or suggestions for reducing this burden, should be sent to the Chief Information Officer, U.S. Patent and Trademark Office, U.S. Department of Commerce, P.O. Box 1450, Alexandria, VA 22313-1450. DO NOT SEND FEES OR COMPLETED FORMS TO THIS ADDRESS. **SEND TO: Commissioner for Patents, P.O. Box 1450, Alexandria, VA 22313-1450.**

ALL REFERENCES CONSIDERED EXCEPT WHERE LINED THROUGH. /A.M.B./

Privacy Act Statement

The Privacy Act of 1974 (P.L. 93-579) requires that you be given certain information in connection with your submission of the attached form related to a patent application or patent. Accordingly, pursuant to the requirements of the Act, please be advised that: (1) the general authority for the collection of this information is 35 U.S.C. 2(b)(2); (2) furnishing of the information solicited is voluntary; and (3) the principal purpose for which the information is used by the U.S. Patent and Trademark Office is to process and/or examine your submission related to a patent application or patent. If you do not furnish the requested information, the U.S. Patent and Trademark Office may not be able to process and/or examine your submission, which may result in termination of proceedings or abandonment of the application or expiration of the patent.

The information provided by you in this form will be subject to the following routine uses:

1. The information on this form will be treated confidentially to the extent allowed under the Freedom of Information Act (5 U.S.C. 552) and the Privacy Act (5 U.S.C. 552a). Records from this system of records may be disclosed to the Department of Justice to determine whether the Freedom of Information Act requires disclosure of these record s.

2. A record from this system of records may be disclosed, as a routine use, in the course of presenting evidence to a court, magistrate, or administrative tribunal, including disclosures to opposing counsel in the course of settlement negotiations.

3. A record in this system of records may be disclosed, as a routine use, to a Member of Congress submitting a request involving an individual, to whom the record pertains, when the individual has requested assistance from the Member with respect to the subject matter of the record.

4. A record in this system of records may be disclosed, as a routine use, to a contractor of the Agency having need for the information in order to perform a contract. Recipients of information shall be required to comply with the requirements of the Privacy Act of 1974, as amended, pursuant to 5 U.S.C. 552a(m).

5. A record related to an International Application filed under the Patent Cooperation Treaty in this system of records may be disclosed, as a routine use, to the International Bureau of the World Intellectual Property Organization, pursuant to the Patent Cooperation Treaty.

6. A record in this system of records may be disclosed, as a routine use, to another federal agency for purposes of National Security review (35 U.S.C. 181) and for review pursuant to the Atomic Energy Act (42 U.S.C. 218(c)).

7. A record from this system of records may be disclosed, as a routine use, to the Administrator, General Services, or his/her designee, during an inspection of records conducted by GSA as part of that agency's responsibility to recommend improvements in records management practices and programs, under authority of 44 U.S.C. 2904 and 2906. Such disclosure shall be made in accordance with the GSA regulations governing inspection of records for this purpose, and any other relevant (i.e., GSA or Commerce) directive. Such disclosure shall not be used to make determinations about individuals.

8. A record from this system of records may be disclosed, as a routine use, to the public after either publication of the application pursuant to 35 U.S.C. 122(b) or issuance of a patent pursuant to 35 U.S.C. 151. Further, a record may be disclosed, subject to the limitations of 37 CFR 1.14, as a routine use, to the public if the record was filed in an application which became abandoned or in which the proceedings were terminated and which application is referenced by either a published application, an application open to public inspections or an issued patent.

9. A record from this system of records may be disclosed, as a routine use, to a Federal, State, or local law enforcement agency, if the USPTO becomes aware of a violation or potential violation of law or regulation.

ALL REFERENCES CONSIDERED EXCEPT WHERE LINED THROUGH. /A.M.B./

Docket No.: NEURE-008/08US
35242/160
(PATENT)

IN THE UNITED STATES PATENT AND TRADEMARK OFFICE

In re Patent Application of:
Neurent Medical Limited

Application No.: 18/647,755

Confirmation No.: 9306

Filed: April 26, 2024

Art Unit: 3794

For: SYSTEMS AND METHODS FOR THERAPEUTIC NASAL TREATMENT USING HANDHELD DEVICE

Examiner: Abigail Marie Bock

Commissioner for Patents
P.O. Box 1450
Alexandria, VA 22313-1450

INFORMATION DISCLOSURE STATEMENT (IDS)

Pursuant to 37 C.F.R. §§ 1.56, 1.97, and 1.98, the attention of the United States Patent and Trademark Office is hereby directed to the references listed on the attached PTO/SB/08. It is respectfully requested that the information be expressly considered during the prosecution of the above-identified application, and that the references be made of record therein and appear among the "References Cited" on any patent to issue therefrom.

Copies of the references listed below are attached:

Non-Patent Literature or Other Documents
Aerin Medical FDA 510(k) Summary - 510(k) Number K150637, dated October 23, 2015 (8 pages)
Aerin Medical FDA 510(k) Summary - 510(k) Number K161994, dated August 19, 2016 (6 pages)
Aerin Medical FDA 510(k) Summary - 510(k) Number K162810, dated December 9, 2016 (7 pages)
Aerin Medical FDA 510(k) Summary - 510(k) Number K172529, dated November 2, 2017 (7 pages)
Aerin Medical FDA 510(k) Summary - 510(k) Number K192471, dated September 9, 2019 (7 pages)
Aerin Medical FDA 510(k) Summary - 510(k) Number K200300, dated March 13, 2020 (6 pages)
International Search Report and Written Opinion issued in International Patent Application No. PCT/IB2020/000544, date of mailing January 11, 2021, 15 pages

65376116

It is submitted that the Information Disclosure Statement is in compliance with 37 C.F.R. § 1.98, and the Examiner is respectfully requested to consider the listed references.

Applicant further submits that submission of the information provided in the attached PTO/SB/08 does not constitute any admission that such information is considered prior art or satisfies the requirements to be a prior art publication.

Applicant believes no fee is due with this response. However, if a fee is due, please charge our Deposit Account No. 50-0369, under Order No. NEURE-008/08US from which the undersigned is authorized to draw.

Dated: June 17, 2024

Respectfully submitted,

Electronic signature: /Matthew P. York/
Matthew P. York
Registration No.: 66,470
BROWN RUDNICK LLP
Brown Rudnick LLP
One Financial Center
Boston, Massachusetts 02111
(617) 856-8200
Attorney for Applicant

65386020 v1-WorkSiteUS-035242/0160

UNITED STATES
PATENT AND TRADEMARK OFFICE

P.O. Box 1450
Alexandria, VA 22313 - 1450
www.uspto.gov

ELECTRONIC ACKNOWLEDGEMENT RECEIPT

APPLICATION #	RECEIPT DATE / TIME	ATTORNEY DOCKET #
18/647,755	**06/17/2024 04:15:56 PM Z ET**	**NEURE-008/08US 35242/160**

Title of Invention

SYSTEMS AND METHODS FOR THERAPEUTIC NASAL TREATMENT USING HANDHELD DEVICE

Application Information

APPLICATION TYPE	Utility - Nonprovisional Application under 35 USC 111(a)	PATENT #	-
CONFIRMATION #	9306	FILED BY	Kelley Warren
PATENT CENTER #	66000390	FILING DATE	04/26/2024
CUSTOMER #	21710	FIRST NAMED INVENTOR	David Townley
CORRESPONDENCE ADDRESS	-	AUTHORIZED BY	Matthew York

Documents

TOTAL DOCUMENTS: 8

DOCUMENT	PAGES	DESCRIPTION	SIZE (KB)
35242_160US - Information Disclosure Statement Fillable PDF.pdf	4	Information Disclosure Statement (IDS) Form (SB08)	1234 KB
35242_21US - Aerin-Medical_FDA-510 k - Summary_K150637-NPL.pdf	8	Non Patent Literature	337 KB
35242_21US - Aerin-Medical_FDA-510 k - Summary_K161994-NPL.pdf	6	Non Patent Literature	432 KB
35242_21US - Aerin-Medical_FDA-510 k - Summary_K162810-NPL.pdf	7	Non Patent Literature	245 KB

35242_21US - Aerin-Medical_FDA-510 k - Summary_K172529-NPL.pdf	7	Non Patent Literature	167 KB
35242_21US - Aerin-Medical_FDA-510 k - Summary_K192471-NPL.pdf	7	Non Patent Literature	2340 KB
35242_21US - Aerin-Medical_FDA-510 k - Summary_K200300-NPL.pdf	6	Non Patent Literature	512 KB
NEURE-008-08US_35242-160_IDS_Transmittal_Letter.pdf	2	Transmittal Letter	97 KB

Digest

DOCUMENT	MESSAGE DIGEST(SHA-512)
35242_160US - Information Disclosure Statement Fillable PDF.pdf	6F974095BD2E4708C4548FDED5190C652F6543E4C6D0EDDC211FD68F68C3076EDC5B968AF1E864AAA3465CE9D1F5D363DEE05E166DCF634E7C74CEFA9AA5B242
35242_21US - Aerin-Medical_FDA-510 k - Summary_K150637-NPL.pdf	346DED32BE160B023182EA9BFC913611C731AA8AA3CA16ACF79F02D5BA4FE0E12B0C132D3588EA1985185C042BCEC50CF174030326CE713B4B51AA399328ECE4
35242_21US - Aerin-Medical_FDA-510 k - Summary_K161994-NPL.pdf	6258FAF3E11C3E17B2915DE92E48F5962E33B2319C36E4524DDF0BF916BEB2115983767 5AE5C4E218A362EB8FB0E18A1DE84443ACBDAEDEC03B015B22CEF7627
35242_21US - Aerin-Medical_FDA-510 k - Summary_K162810-NPL.pdf	96973421DD55EB5CFE14993EB23625B44E62EAB287049BF340320082F59DBB90F5357CC1AF7F0E3CFD00767D72DEE8C64EBF02888E1E18D27BD9E4F843E715A7
35242_21US - Aerin-Medical_FDA-510 k -	723F389578B3639E08F5A0EA6A9E2F6DA4C4187BEC87117DEE8ECC263819E73FA83F0276CAEFB972DC9E2491CC8CDE864

Summary_K172529-NPL.pdf	882EEC4C5CC90B8F5E61474878E8098
35242_21US - Aerin-Medical_FDA-510 k - Summary_K192471-NPL.pdf	B4EA01DB8DCAB669A280137E1D37070561ACE0B9AC325FF62D081E5BC60890DD12F1DA88B4B2255837C636FAAC6DF28DAA19A3792DF20202AEA08D3428ECBB43
35242_21US - Aerin-Medical_FDA-510 k - Summary_K200300-NPL.pdf	49E49E363BCA114D6BC54F8D05F940AC8D7E07E67F22CC8993AE3E1101F542BF08C696F88B6A51A9552C9283A7B07DFC15E06A7E904834C3C47F14D7145D2678
NEURE-008-08US_35242-160_IDS_Transmittal_Letter.pdf	2F59AB76849345201FC244EBEF66148D89434B36F24E1377CCF8DC961500E6915773FA0ADFB4AA8E2E93AD029B78C8847190C13AF75A9C3BB9D90C6F5E01CA75

This Acknowledgement Receipt evidences receipt on the noted date by the USPTO of the indicated documents, characterized by the applicant, and including page counts, where applicable. It serves as evidence of receipt similar to a Post Card, as described in MPEP 503.

New Applications Under 35 U.S.C. 111

If a new application is being filed and the application includes the necessary components for filing date (see 37 CFR 1.53(b)-(d) and MPEP 506), a Filing Receipt (37 CFR 1.54) will be issued in due course and the date shown on this Acknowledgement Receipt will establish the filing date of the application

National Stage of an International Application under 35 U.S.C. 371

If a timely submission to enter the national stage of an international application is compliant with the conditions of 35 U.S.C. 371 and other applicable requirements a Form PCT/DO/EO/903 indicating acceptance of the application as a national stage submission under 35 U.S.C. 371 will be issued in addition to the Filing Receipt, in due course.

New International Application Filed with the USPTO as a Receiving Office

If a new international application is being filed and the international application includes the necessary components for an international filing date (see PCT Article 11 and MPEP 1810), a Notification of the International Application Number and of the International Filing Date (Form PCT/RO/105) will be issued in due course, subject to prescriptions concerning national security, and the date shown on this Acknowledgement Receipt will establish the international filing date of the application.

PTO/SB/08a (01-22)
Approved for use through 05/31/2024. OMB 0651-0031
U.S. Patent and Trademark Office; U.S. DEPARTMENT OF COMMERCE
Under the Paperwork Reduction Act of 1995, no persons are required to respond to a collection of information unless it contains a valid OMB control number.

INFORMATION DISCLOSURE STATEMENT BY APPLICANT (**Not for submission under 37 CFR 1.99)**		
	Application Number	18647755
	Filing Date	2024-04-26
	First Named Inventor	David Townley
	Art Unit	3794
	Examiner Name	A. M. Bock
	Attorney Docket Number	NEURE-008/08US 35242/160

U.S.PATENTS Remove

Examiner Initial*	Cite No	Patent Number	Kind Code[1]	Issue Date	Name of Patentee or Applicant of cited Document	Pages,Columns,Lines where Relevant Passages or Relevant Figures Appear
	1					

If you wish to add additional U.S. Patent citation information please click the Add button. Add

U.S.PATENT APPLICATION PUBLICATIONS Remove

Examiner Initial*	Cite No	Publication Number	Kind Code[1]	Publication Date	Name of Patentee or Applicant of cited Document	Pages,Columns,Lines where Relevant Passages or Relevant Figures Appear
	1					

If you wish to add additional U.S. Published Application citation information please click the Add button. Add

FOREIGN PATENT DOCUMENTS Remove

Examiner Initial*	Cite No	Foreign Document Number[3]	Country Code[2] ¡	Kind Code[4]	Publication Date	Name of Patentee or Applicant of cited Document	Pages,Columns,Lines where Relevant Passages or Relevant Figures Appear	T[5]
	1							☐

If you wish to add additional Foreign Patent Document citation information please click the Add button Add

NON-PATENT LITERATURE DOCUMENTS Remove

Examiner Initials*	Cite No	Include name of the author (in CAPITAL LETTERS), title of the article (when appropriate), title of the item (book, magazine, journal, serial, symposium, catalog, etc), date, pages(s), volume-issue number(s), publisher, city and/or country where published.	T[5]

INFORMATION DISCLOSURE STATEMENT BY APPLICANT (Not for submission under 37 CFR 1.99)		
	Application Number	18647755
	Filing Date	2024-04-26
	First Named Inventor	David Townley
	Art Unit	3794
	Examiner Name	A. M. Bock
	Attorney Docket Number	NEURE-008/08US 35242/160

	1	Aerin Medical FDA 510(k) Summary - 510(k) Number K150637, dated October 23, 2015 (8 pages)	☐
	2	Aerin Medical FDA 510(k) Summary - 510(k) Number K161994, dated August 19, 2016 (6 pages)	☐
	3	Aerin Medical FDA 510(k) Summary - 510(k) Number K162810, dated December 9, 2016 (7 pages)	☐
	4	Aerin Medical FDA 510(k) Summary - 510(k) Number K172529, dated November 2, 2017 (7 pages)	☐
	5	Aerin Medical FDA 510(k) Summary - 510(k) Number K192471, dated September 9, 2019 (7 pages)	☐
	6	Aerin Medical FDA 510(k) Summary - 510(k) Number K200300, dated March 13, 2020 (6 pages)	☐

If you wish to add additional non-patent literature document citation information please click the Add button Add

EXAMINER SIGNATURE

Examiner Signature		Date Considered	

*EXAMINER: Initial if reference considered, whether or not citation is in conformance with MPEP 609. Draw line through a citation if not in conformance and not considered. Include copy of this form with next communication to applicant.

[1] See Kind Codes of USPTO Patent Documents at www.USPTO.GOV or MPEP 901.04. [2] Enter office that issued the document, by the two-letter code (WIPO Standard ST.3). [3] For Japanese patent documents, the indication of the year of the reign of the Emperor must precede the serial number of the patent document. [4] Kind of document by the appropriate symbols as indicated on the document under WIPO Standard ST.16 if possible. [5] Applicant is to place a check mark here if English language translation is attached.

INFORMATION DISCLOSURE STATEMENT BY APPLICANT (Not for submission under 37 CFR 1.99)		
	Application Number	18647755
	Filing Date	2024-04-26
	First Named Inventor	David Townley
	Art Unit	3794
	Examiner Name	A. M. Bock
	Attorney Docket Number	NEURE-008/08US 35242/160

CERTIFICATION STATEMENT

Please see 37 CFR 1.97 and 1.98 to make the appropriate selection(s):

☐ That each item of information contained in the information disclosure statement was first cited in any communication from a foreign patent office in a counterpart foreign application not more than three months prior to the filing of the information disclosure statement. See 37 CFR 1.97(e)(1).

OR

☐ That no item of information contained in the information disclosure statement was cited in a communication from a foreign patent office in a counterpart foreign application, and, to the knowledge of the person signing the certification after making reasonable inquiry, no item of information contained in the information disclosure statement was known to any individual designated in 37 CFR 1.56(c) more than three months prior to the filing of the information disclosure statement. See 37 CFR 1.97(e)(2).

☐ See attached certification statement.

☐ The fee set forth in 37 CFR 1.17 (p) has been submitted herewith.

☒ A certification statement is not submitted herewith.

SIGNATURE

A signature of the applicant or representative is required in accordance with CFR 1.33, 10.18. Please see CFR 1.4(d) for the form of the signature.

Signature	/Matthew P. York/	Date (YYYY-MM-DD)	2024-06-17
Name/Print	Matthew P. York	Registration Number	66,470

This collection of information is required by 37 CFR 1.97 and 1.98. The information is required to obtain or retain a benefit by the public which is to file (and by the USPTO to process) an application. Confidentiality is governed by 35 U.S.C. 122 and 37 CFR 1.14. This collection is estimated to take 1 hour to complete, including gathering, preparing and submitting the completed application form to the USPTO. Time will vary depending upon the individual case. Any comments on the amount of time you require to complete this form and/or suggestions for reducing this burden, should be sent to the Chief Information Officer, U.S. Patent and Trademark Office, U.S. Department of Commerce, P.O. Box 1450, Alexandria, VA 22313-1450. DO NOT SEND FEES OR COMPLETED FORMS TO THIS ADDRESS. **SEND TO: Commissioner for Patents, P.O. Box 1450, Alexandria, VA 22313-1450.**

Privacy Act Statement

The Privacy Act of 1974 (P.L. 93-579) requires that you be given certain information in connection with your submission of the attached form related to a patent application or patent. Accordingly, pursuant to the requirements of the Act, please be advised that: (1) the general authority for the collection of this information is 35 U.S.C. 2(b)(2); (2) furnishing of the information solicited is voluntary; and (3) the principal purpose for which the information is used by the U.S. Patent and Trademark Office is to process and/or examine your submission related to a patent application or patent. If you do not furnish the requested information, the U.S. Patent and Trademark Office may not be able to process and/or examine your submission, which may result in termination of proceedings or abandonment of the application or expiration of the patent.

The information provided by you in this form will be subject to the following routine uses:

1. The information on this form will be treated confidentially to the extent allowed under the Freedom of Information Act (5 U.S.C. 552) and the Privacy Act (5 U.S.C. 552a). Records from this system of records may be disclosed to the Department of Justice to determine whether the Freedom of Information Act requires disclosure of these record s.

2. A record from this system of records may be disclosed, as a routine use, in the course of presenting evidence to a court, magistrate, or administrative tribunal, including disclosures to opposing counsel in the course of settlement negotiations.

3. A record in this system of records may be disclosed, as a routine use, to a Member of Congress submitting a request involving an individual, to whom the record pertains, when the individual has requested assistance from the Member with respect to the subject matter of the record.

4. A record in this system of records may be disclosed, as a routine use, to a contractor of the Agency having need for the information in order to perform a contract. Recipients of information shall be required to comply with the requirements of the Privacy Act of 1974, as amended, pursuant to 5 U.S.C. 552a(m).

5. A record related to an International Application filed under the Patent Cooperation Treaty in this system of records may be disclosed, as a routine use, to the International Bureau of the World Intellectual Property Organization, pursuant to the Patent Cooperation Treaty.

6. A record in this system of records may be disclosed, as a routine use, to another federal agency for purposes of National Security review (35 U.S.C. 181) and for review pursuant to the Atomic Energy Act (42 U.S.C. 218(c)).

7. A record from this system of records may be disclosed, as a routine use, to the Administrator, General Services, or his/her designee, during an inspection of records conducted by GSA as part of that agency's responsibility to recommend improvements in records management practices and programs, under authority of 44 U.S.C. 2904 and 2906. Such disclosure shall be made in accordance with the GSA regulations governing inspection of records for this purpose, and any other relevant (i.e., GSA or Commerce) directive. Such disclosure shall not be used to make determinations about individuals.

8. A record from this system of records may be disclosed, as a routine use, to the public after either publication of the application pursuant to 35 U.S.C. 122(b) or issuance of a patent pursuant to 35 U.S.C. 151. Further, a record may be disclosed, subject to the limitations of 37 CFR 1.14, as a routine use, to the public if the record was filed in an application which became abandoned or in which the proceedings were terminated and which application is referenced by either a published application, an application open to public inspections or an issued patent.

9. A record from this system of records may be disclosed, as a routine use, to a Federal, State, or local law enforcement agency, if the USPTO becomes aware of a violation or potential violation of law or regulation.

UNITED STATES
PATENT AND TRADEMARK OFFICE

P.O. Box 1450
Alexandria, VA 22313 - 1450
www.uspto.gov

ELECTRONIC ACKNOWLEDGEMENT RECEIPT

APPLICATION #	RECEIPT DATE / TIME	ATTORNEY DOCKET #
18/647,755	**06/17/2024 03:25:02 PM Z ET**	**NEURE-008/08US 35242/160**

Title of Invention

SYSTEMS AND METHODS FOR THERAPEUTIC NASAL TREATMENT USING HANDHELD DEVICE

Application Information

APPLICATION TYPE	Utility - Nonprovisional Application under 35 USC 111(a)	PATENT #	-
CONFIRMATION #	9306	FILED BY	Matthew York
PATENT CENTER #	65999664	FILING DATE	04/26/2024
CUSTOMER #	21710	FIRST NAMED INVENTOR	David Townley
CORRESPONDENCE ADDRESS	-	AUTHORIZED BY	-

Documents

TOTAL DOCUMENTS: 1

DOCUMENT	PAGES	DESCRIPTION	SIZE (KB)
NEURE-008-08US_POA.pdf	2	Power of Attorney	331 KB

Digest

DOCUMENT	MESSAGE DIGEST(SHA-512)
NEURE-008-08US_POA.pdf	2CC55BC3FC6086C4DC70C4DD81AA3D9E71AAE3A19A4877980D7C4178AC7634C0AD26A558C39D6EBD7AFF24FC8F839EFBBF8DECD2FB6E15F35D48A330F185AEDF

This Acknowledgement Receipt evidences receipt on the noted date by the USPTO of the indicated documents, characterized by the applicant, and including page counts, where applicable. It serves as evidence of receipt similar to a Post Card, as

described in MPEP 503.

New Applications Under 35 U.S.C. 111

If a new application is being filed and the application includes the necessary components for filing date (see 37 CFR 1.53(b)-(d) and MPEP 506), a Filing Receipt (37 CFR 1.54) will be issued in due course and the date shown on this Acknowledgement Receipt will establish the filing date of the application

National Stage of an International Application under 35 U.S.C. 371

If a timely submission to enter the national stage of an international application is compliant with the conditions of 35 U.S.C. 371 and other applicable requirements a Form PCT/DO/EO/903 indicating acceptance of the application as a national stage submission under 35 U.S.C. 371 will be issued in addition to the Filing Receipt, in due course.

New International Application Filed with the USPTO as a Receiving Office

If a new international application is being filed and the international application includes the necessary components for an international filing date (see PCT Article 11 and MPEP 1810), a Notification of the International Application Number and of the International Filing Date (Form PCT/RO/105) will be issued in due course, subject to prescriptions concerning national security, and the date shown on this Acknowledgement Receipt will establish the international filing date of the application.

Doc Code: PA..
Document Description: Power of Attorney

PTO/AIA/82A (07-13)
Approved for use through 09/30/2025. OMB 0651-0035
U.S. Patent and Trademark Office; U.S. DEPARTMENT OF COMMERCE
Under the Paperwork Reduction Act of 1995, no persons are required to respond to a collection of information unless it displays a valid OMB control number.

TRANSMITTAL FOR POWER OF ATTORNEY TO ONE OR MORE REGISTERED PRACTITIONERS

NOTE: This form is to be submitted with the Power of Attorney by Applicant form (PTO/AIA/82B) to identify the application to which the Power of Attorney is directed, in accordance with 37 CFR 1.5, unless the application number and filing date are identified in the Power of Attorney by Applicant form. If neither form PTO/AIA/82A nor form PTO/AIA82B identifies the application to which the Power of Attorney is directed, the Power of Attorney will not be recognized in the application.

Application Number	18/647,755
Filing Date	April 26, 2024
First Named Inventor	David Townley
Title	SYSTEMS AND METHODS FOR THERAPEUTIC NASAL TREATMENT USING HANDHELD DEVICE
Art Unit	3794
Examiner Name	Abigail Marie Bock
Attorney Docket Number	NEURE-008/08US 35242/160

SIGNATURE of Applicant or Patent Practitioner

Signature	/Matthew P. York/	Date (Optional)	
Name	Matthew P. York	Registration Number	66470
Title (if Applicant is a juristic entity)			
Applicant Name (if Applicant is a juristic entity)			

NOTE: This form must be signed in accordance with 37 CFR 1.33. See 37 CFR 1.4(d) for signature requirements and certifications. If more than one applicant, use multiple forms.

☑ *Total of 2 forms are submitted.

A Federal agency may not conduct or sponsor, and a person is not required to respond to, nor shall a person be subject to a penalty for failure to comply with an information collection subject to the requirements of the Paperwork Reduction Act of 1995, unless the information collection has a currently valid OMB Control Number. The OMB Control Number for this information collection is 0651-0035. Public burden for this form is estimated to average 3 minutes per response, including the time for reviewing instructions, searching existing data sources, gathering and maintaining the data needed, and completing and reviewing the information collection. Send comments regarding this burden estimate or any other aspect of this information collection, including suggestions for reducing this burden to the Chief Administrative Officer, United States Patent and Trademark Office, P.O. Box 1450, Alexandria, VA 22313-1450 or email InformationCollection@uspto.gov. **DO NOT SEND FEES OR COMPLETED FORMS TO THIS ADDRESS.** If filing this completed form by mail, send to: **Commissioner for Patents, P.O. Box 1450, Alexandria, VA 22313-1450.**

If you need assistance in completing the form, call 1-800-PTO-9199 and select option 2.

Doc Code: PA..
Document Description: Power of Attorney

PTO/AIA/82B (07-13)
Approved for use through 03/31/2021. OMB 0651-0035
U.S. Patent and Trademark Office; U.S. DEPARTMENT OF COMMERCE
Under the Paperwork Reduction Act of 1995, no persons are required to respond to a collection of information unless it displays a valid OMB control number

POWER OF ATTORNEY BY APPLICANT

I hereby revoke all previous powers of attorney given in the application identified in either the attached transmittal letter or the boxes below.

Application Number	Filing Date

(Note: The boxes above may be left blank if information is provided on form PTO/AIA/82A.)

☑ I hereby appoint the Patent Practitioner(s) associated with the following Customer Number as my/our attorney(s) or agent(s), and to transact all business in the United States Patent and Trademark Office connected therewith for the application referenced in the attached transmittal letter (form PTO/AIA/82A) or identified above: 21710

OR

☐ I hereby appoint Practitioner(s) named in the attached list (form PTO/AIA/82C) as my/our attorney(s) or agent(s), and to transact all business in the United States Patent and Trademark Office connected therewith for the patent application referenced in the attached transmittal letter (form PTO/AIA/82A) or identified above. (Note: Complete form PTO/AIA/82C.)

Please recognize or change the correspondence address for the application identified in the attached transmittal letter or the boxes above to:

☑ The address associated with the above-mentioned Customer Number

OR

☐ The address associated with Customer Number:

OR

☐ Firm or Individual Name					
Address					
City		State		Zip	
Country					
Telephone		Email			

I am the Applicant (if the Applicant is a juristic entity, list the Applicant name in the box):

Neurent Medical Limited

☐ Inventor or Joint Inventor (title not required below)

☐ Legal Representative of a Deceased or Legally Incapacitated Inventor (title not required below)

☑ Assignee or Person to Whom the Inventor is Under an Obligation to Assign (provide signer's title if applicant is a juristic entity)

☐ Person Who Otherwise Shows Sufficient Proprietary Interest (e.g., a petition under 37 CFR 1.46(b)(2) was granted in the application or is concurrently being filed with this document) (provide signer's title if applicant is a juristic entity)

SIGNATURE of Applicant for Patent

The undersigned (whose title is supplied below) is authorized to act on behalf of the applicant (e.g., where the applicant is a juristic entity).

Signature		Date (Optional)	1 June 2020
Name	David Townley		
Title	Chief Technology Officer (CTO), Neurent Medical Limited		

NOTE: Signature - This form must be signed by the applicant in accordance with 37 CFR 1.33. See 37 CFR 1.4 for signature requirements and certifications. If more than one applicant, use multiple forms.

☐ Total of forms are submitted.

This collection of information is required by 37 CFR 1.131, 1.32, and 1.33. The information is required to obtain or retain a benefit by the public which is to file (and by the USPTO to process) an application. Confidentiality is governed by 35 U.S.C. 122 and 37 CFR 1.11 and 1.14. This collection is estimated to take 3 minutes to complete, including gathering, preparing, and submitting the completed application form to the USPTO. Time will vary depending upon the individual case. Any comments on the amount of time you require to complete this form and/or suggestions for reducing this burden, should be sent to the Chief Information Officer, U.S. Patent and Trademark Office, U.S. Department of Commerce, P.O. Box 1450, Alexandria, VA 22313-1450. DO NOT SEND FEES OR COMPLETED FORMS TO THIS ADDRESS. **SEND TO: Commissioner for Patents, P.O. Box 1450, Alexandria, VA 22313-1450.**

If you need assistance in completing the form, call 1-800-PTO-9199 and select option 2.

UNITED STATES PATENT AND TRADEMARK OFFICE

UNITED STATES DEPARTMENT OF COMMERCE
United States Patent and Trademark Office
Address: COMMISSIONER FOR PATENTS
P.O. Box 1450
Alexandria, Virginia 22313-1450
www.uspto.gov

APPLICATION NO.	FILING DATE	FIRST NAMED INVENTOR	ATTORNEY DOCKET NO.	CONFIRMATION NO.
18/647,755	04/26/2024	David Townley	NEURE-008/08US 35242/160	9306

21710 7590 06/05/2024
BROWN RUDNICK LLP
ONE FINANCIAL CENTER
BOSTON, MA 02111

EXAMINER
CENTRAL, DOCKET

ART UNIT	PAPER NUMBER
3794	

NOTIFICATION DATE	DELIVERY MODE
06/05/2024	ELECTRONIC

Please find below and/or attached an Office communication concerning this application or proceeding.

The time period for reply, if any, is set in the attached communication.

Notice of the Office communication was sent electronically on above-indicated "Notification Date" to the following e-mail address(es):

ip@brownrudnick.com
usactions@brownrudnick.com

PTOL-90A (Rev. 04/07)

Decision Granting Request for Prioritized Examination (Track I)	**Application No.** 18/647,755	**Applicant(s)** Townley, David	
	Examiner MICHELLE R EASON	**Art Unit** OPET	**AIA (FITF) Status** Yes

1. THE REQUEST FILED 26 April 2024 IS **GRANTED** .

   The above-identified application has met the requirements for prioritized examination
   A. ☑ for an original nonprovisional application (Track I).
   B. ☐ for an application undergoing continued examination (RCE).

2. **The above-identified application will undergo prioritized examination**. The application will be accorded special status throughout its entire course of prosecution until one of the following occurs:

   A. filing a **petition for extension of time** to extend the time period for filing a reply;

   B. filing an **amendment to amend the application to contain more than four independent claims, more than thirty total claims** , or a multiple dependent claim;

   C. filing a **request for continued examination** ;

   D. filing a notice of appeal;

   E. filing a request for suspension of action;

   F. mailing of a notice of allowance;

   G. mailing of a final Office action;

   H. completion of examination as defined in 37 CFR 41.102; or

   I. abandonment of the application.

Telephone inquiries with regard to this decision should be directed to MICHELLE EASON at (571) 272-4231. In his/her absence, calls may be directed to Petition Help Desk at (571) 272-3282.

/Michelle R. Eason/ Lead Paralegal Specialist, OPET	

U.S. Patent and Trademark Office
PTO-2298 (Rev. 02-2012)

UNITED STATES PATENT AND TRADEMARK OFFICE

UNITED STATES DEPARTMENT OF COMMERCE
United States Patent and Trademark Office
Address: COMMISSIONER FOR PATENTS
P.O. Box 1450
Alexandria, Virginia 22313-1450
www.uspto.gov

APPLICATION NUMBER	FILING or 371(c) DATE	GRP ART UNIT	FIL FEE REC'D	ATTY.DOCKET.NO	TOT CLAIMS	IND CLAIMS
18/647,755	04/26/2024		664	NEURE-008/08US 35242/160	20	1

CONFIRMATION NO. 9306

21710
BROWN RUDNICK LLP
ONE FINANCIAL CENTER
BOSTON, MA 02111

FILING RECEIPT

OC000000072382590

Date Mailed: 05/09/2024

Receipt is acknowledged of this non-provisional utility patent application. The application will be taken up for examination in due course. Applicant will be notified as to the results of the examination. Any correspondence concerning the application must include the following identification information: the U.S. APPLICATION NUMBER, FILING DATE, NAME OF FIRST INVENTOR, and TITLE OF INVENTION. Fees transmitted by check or draft are subject to collection.

Please verify the accuracy of the data presented on this receipt. If an error is noted on this Filing Receipt, please submit a written request for a corrected Filing Receipt, including a properly marked-up ADS showing the changes with strike-through for deletions and underlining for additions. If you received a "Notice to File Missing Parts" or other Notice requiring a response for this application, please submit any request for correction to this Filing Receipt with your reply to the Notice. When the USPTO processes the reply to the Notice, the USPTO will generate another Filing Receipt incorporating the requested corrections provided that the request is grantable.

Inventor(s)

David Townley, County Clare, IRELAND;

Applicant(s)

Neurent Medical Limited, Oranmore, IRELAND;

Power of Attorney: None

Domestic Priority data as claimed by applicant

This application is a CON of 18/411,476 01/12/2024
which is a CON of 17/225,560 04/08/2021 PAT 11,883,091
which claims benefit of 63/007,584 04/09/2020

Foreign Applications for which priority is claimed (You may be eligible to benefit from the Patent Prosecution Highway program at the USPTO. Please see http://www.uspto.gov for more information.) - None.
Foreign application information must be provided in an Application Data Sheet in order to constitute a claim to foreign priority. See 37 CFR 1.55 and 1.76.

Permission to Access Application via Priority Document Exchange: Yes

Permission to Access Search Results: Yes

Applicant may provide or rescind an authorization for access using Form PTO/SB/39 or Form PTO/SB/69 as appropriate.

If Required, Foreign Filing License Granted: 05/08/2024

The country code and number of your priority application, to be used for filing abroad under the Paris Convention, is **US 18/647,755**

Projected Publication Date: 08/15/2024

Non-Publication Request: No

Early Publication Request: No
**** SMALL ENTITY ****
Title

SYSTEMS AND METHODS FOR THERAPEUTIC NASAL TREATMENT USING HANDHELD DEVICE

Preliminary Class

Statement under 37 CFR 1.55 or 1.78 for AIA (First Inventor to File) Transition Applications: No

PROTECTING YOUR INVENTION OUTSIDE THE UNITED STATES

Since the rights granted by a U.S. patent extend only throughout the territory of the United States and have no effect in a foreign country, an inventor who wishes patent protection in another country must apply for a patent in a specific country or in regional patent offices. Applicants may wish to consider the filing of an international application under the Patent Cooperation Treaty (PCT). An international (PCT) application generally has the same effect as a regular national patent application in each PCT-member country. The PCT process **simplifies** the filing of patent applications on the same invention in member countries, but **does not result** in a grant of "an international patent" and does not eliminate the need of applicants to file additional documents and fees in countries where patent protection is desired.

Almost every country has its own patent law, and a person desiring a patent in a particular country must make an application for patent in that country in accordance with its particular laws. Since the laws of many countries differ in various respects from the patent law of the United States, applicants are advised to seek guidance from specific foreign countries to ensure that patent rights are not lost prematurely.

Applicants also are advised that in the case of inventions made in the United States, the Director of the USPTO must issue a license before applicants can apply for a patent in a foreign country. The filing of a U.S. patent application serves as a request for a foreign filing license. The application's filing receipt contains further information and guidance as to the status of applicant's license for foreign filing.

Applicants may wish to consult the USPTO booklet, "General Information Concerning Patents" (specifically, the section entitled "Treaties and Foreign Patents") for more information on timeframes and deadlines for filing foreign patent applications. The guide is available either by contacting the USPTO Contact Center at 800-786-9199, or it can be viewed on the USPTO website at http://www.uspto.gov/web/offices/pac/doc/general/index.html.

For information on preventing theft of your intellectual property (patents, trademarks and copyrights), you may wish to consult the U.S. Government website, http://www.stopfakes.gov. Part of a Department of Commerce initiative, this website includes self-help "toolkits" giving innovators guidance on how to protect intellectual property in specific countries such as China, Korea and Mexico. For questions regarding patent enforcement issues, applicants may call the U.S. Government hotline at 1-866-999-HALT (1-866-999-4258).

LICENSE FOR FOREIGN FILING UNDER

Title 35, United States Code, Section 184

Title 37, Code of Federal Regulations, 5.11 & 5.15

GRANTED

The applicant has been granted a license under 35 U.S.C. 184, if the phrase "IF REQUIRED, FOREIGN FILING LICENSE GRANTED" followed by a date appears on this form. Such licenses are issued in all applications where the conditions for issuance of a license have been met, regardless of whether or not a license may be required as set forth in 37 CFR 5.15. The scope and limitations of this license are set forth in 37 CFR 5.15(a) unless an earlier license has been issued under 37 CFR 5.15(b). The license is subject to revocation upon written notification. The date indicated is the effective date of the license, unless an earlier license of similar scope has been granted under 37 CFR 5.13 or 5.14.

This license is to be retained by the licensee and may be used at any time on or after the effective date thereof unless it is revoked. This license is automatically transferred to any related applications(s) filed under 37 CFR 1.53(d). This license is not retroactive.

The grant of a license does not in any way lessen the responsibility of a licensee for the security of the subject matter as imposed by any Government contract or the provisions of existing laws relating to espionage and the national security or the export of technical data. Licensees should apprise themselves of current regulations especially with respect to certain countries, of other agencies, particularly the Office of Defense Trade Controls, Department of State (with respect to Arms, Munitions and Implements of War (22 CFR 121-128)); the Bureau of Industry and Security, Department of Commerce (15 CFR parts 730-774); the Office of Foreign AssetsControl, Department of Treasury (31 CFR Parts 500+) and the Department of Energy.

NOT GRANTED

No license under 35 U.S.C. 184 has been granted at this time, if the phrase "IF REQUIRED, FOREIGN FILING LICENSE GRANTED" DOES NOT appear on this form. Applicant may still petition for a license under 37 CFR 5.12, if a license is desired before the expiration of 6 months from the filing date of the application. If 6 months has lapsed from the filing date of this application and the licensee has not received any indication of a secrecy order under 35 U.S.C. 181, the licensee may foreign file the application pursuant to 37 CFR 5.15(b).

SelectUSA

The United States represents the largest, most dynamic marketplace in the world and is an unparalleled location for business investment, innovation, and commercialization of new technologies. The U.S. offers tremendous resources and advantages for those who invest and manufacture goods here. Through SelectUSA, our nation works to promote and facilitate business investment. SelectUSA provides information assistance to the international investor community; serves as an ombudsman for existing and potential investors; advocates on behalf of U.S. cities, states, and regions competing for global investment; and counsels U.S. economic development organizations on investment attraction best practices. To learn more about why the United States is the best country in the world to develop technology, manufacture products, deliver services, and grow your business, visit http://www.SelectUSA.gov or call +1-202-482-6800.

PATENT APPLICATION FEE DETERMINATION RECORD Substitute for Form PTO-875	Application or Docket Number 18/647,755

APPLICATION AS FILED - PART I

FOR	(Column 1) NUMBER FILED	(Column 2) NUMBER EXTRA	SMALL ENTITY RATE($)	SMALL ENTITY FEE($)	OR	OTHER THAN SMALL ENTITY RATE($)	OTHER THAN SMALL ENTITY FEE($)
BASIC FEE (37 CFR 1.16(a), (b), or (c))	N/A	N/A	N/A	64		N/A	
SEARCH FEE (37 CFR 1.16(k), (i), or (m))	N/A	N/A	N/A	280		N/A	
EXAMINATION FEE (37 CFR 1.16(o), (p), or (q))	N/A	N/A	N/A	320		N/A	
TOTAL CLAIMS (37 CFR 1.16(i))	20 minus 20 =	* 0	x =	0	OR		
INDEPENDENT CLAIMS (37 CFR 1.16(h))	1 minus 3 =	*	x =	0			
APPLICATION SIZE FEE (37 CFR 1.16(s))	If the specification and drawings exceed 100 sheets of paper, the application size fee due is $310 ($155 for small entity) for each additional 50 sheets or fraction thereof. See 35 U.S.C. 41(a)(1)(G) and 37 CFR 1.16(s).			0			
MULTIPLE DEPENDENT CLAIM PRESENT (37 CFR 1.16(j))				0			
* If the difference in column 1 is less than zero, enter "0" in column 2.			TOTAL	664		TOTAL	

APPLICATION AS AMENDED - PART II

		(Column 1) CLAIMS REMAINING AFTER AMENDMENT		(Column 2) HIGHEST NUMBER PREVIOUSLY PAID FOR	(Column 3) PRESENT EXTRA	SMALL ENTITY RATE($)	SMALL ENTITY ADDITIONAL FEE($)	OR	OTHER THAN SMALL ENTITY RATE($)	OTHER THAN SMALL ENTITY ADDITIONAL FEE($)
AMENDMENT A	Total (37 CFR 1.16(i))	*	Minus	**	=	x =		OR	x =	
AMENDMENT A	Independent (37 CFR 1.16(h))	*	Minus	***	=	x =		OR	x =	
AMENDMENT A	Application Size Fee (37 CFR 1.16(s))									
AMENDMENT A	FIRST PRESENTATION OF MULTIPLE DEPENDENT CLAIM (37 CFR 1.16(j))							OR		
						TOTAL ADD'L FEE		OR	TOTAL ADD'L FEE	

		(Column 1) CLAIMS REMAINING AFTER AMENDMENT		(Column 2) HIGHEST NUMBER PREVIOUSLY PAID FOR	(Column 3) PRESENT EXTRA	RATE($)	ADDITIONAL FEE($)		RATE($)	ADDITIONAL FEE($)
AMENDMENT B	Total (37 CFR 1.16(i))	*	Minus	**	=	x =		OR	x =	
AMENDMENT B	Independent (37 CFR 1.16(h))	*	Minus	***	=	x =		OR	x =	
AMENDMENT B	Application Size Fee (37 CFR 1.16(s))									
AMENDMENT B	FIRST PRESENTATION OF MULTIPLE DEPENDENT CLAIM (37 CFR 1.16(j))							OR		
						TOTAL ADD'L FEE		OR	TOTAL ADD'L FEE	

* If the entry in column 1 is less than the entry in column 2, write "0" in column 3.
** If the "Highest Number Previously Paid For" IN THIS SPACE is less than 20, enter "20".
*** If the "Highest Number Previously Paid For" IN THIS SPACE is less than 3, enter "3".
The "Highest Number Previously Paid For" (Total or Independent) is the highest found in the appropriate box in column 1.

United States Patent and Trademark Office

Under Secretary of Commerce for Intellectual Property and
Director of the United States Patent and Trademark Office

WELCOME TO THE UNITED STATES PATENT AND TRADEMARK OFFICE (USPTO)

*Congratulations on taking the first step to protect your invention. You can now advertise or mark any products covered by this application for your invention as **"Patent Pending"** for as long as this application is pending!*

We are here to help you on the rest of your journey.

New to the process? The Patent Basics page will take you from "What is a patent?" to assistance with the application process.

- **www.uspto.gov/PatentBasics**

Consider cost savings. You might qualify for small entity or micro entity status, which means a discount on most USPTO patent fees.

- **www.uspto.gov/EntityStatus**

Become a registered electronic filer (eFiler). You'll gain access to the full capabilities of Patent Center. As a registered eFiler, you can electronically view your submission, track the progress of your application, and respond to USPTO correspondence.

- **www.uspto.gov/NewPatentFilers**

Learn how to identify which of your creative ideas might be intellectual property assets and how to protect them by using the USPTO Intellectual Property (IP) Identifier.

- **ipidentifier.uspto.gov**

We also provide Pro Se Assistance, support specifically geared for **independent inventors without an attorney or agent.** Follow the link below, call us at 866-767-3848, or email **proseassistancecenter@uspto.gov**.

- **www.uspto.gov/ProSePatents**

Need help near you? We have regional offices across the country, as well as Patent and Trademark Resource Centers in libraries in nearly every state, with specialists standing by to help you at no cost.

- **www.uspto.gov/locations**
- **www.uspto.gov/ptrc**

Contact us:

- **General information:** USPTO Contact Center
  - **www.uspto.gov/help**
- **Patent Center:**
  Patent Electronic Business Center
  - **www.uspto.gov/EBC**
- **Pre or post-examination:** Application Assistance Unit
  - **www.uspto.gov/PatentAssistance**

Want to learn more?

- **Access our free services** all in one spot. Find all of our contact centers, nationwide services, events, education, and training.
  - **www.uspto.gov/FreeServices**
- **Connect with us** on Instagram, LinkedIn, Twitter, Facebook, and YouTube.
- **Hear about resources for startups, inventors, and entrepreneurs,** as well as our initiatives engaging women, the military community, and others. These programs offer helpful tips and tricks on identifying and managing your IP, finding options for funding, and expanding your network to support your business.
  - **www.uspto.gov/startups**
  - **www.uspto.gov/inventors**
  - **www.uspto.gov/initiatives**
- We hope you connect with us by subscribing to receive important notifications by email.
  - **www.uspto.gov/subscribe**

Kathi Vidal

Kathi Vidal
Under Secretary of Commerce for Intellectual Property and
Director of the United States Patent and Trademark Office

Derrick Brent
Deputy Under Secretary of Commerce for Intellectual Property and
Deputy Director of the United States Patent and Trademark Office

Docket No.: NEURE-008/08US
35242/160
(PATENT)

IN THE UNITED STATES PATENT AND TRADEMARK OFFICE

In re Patent Application of:
Neurent Medical Limited

Application No.: 18/647,755

Confirmation No.: 9306

Filed: April 26, 2024

Art Unit: Not Yet Assigned

For: SYSTEMS AND METHODS FOR THERAPEUTIC NASAL TREATMENT USING HANDHELD DEVICE

Examiner: Not Yet Assigned

Commissioner for Patents
P.O. Box 1450
Alexandria, VA 22313-1450

INFORMATION DISCLOSURE STATEMENT (IDS)

Pursuant to 37 C.F.R. §§ 1.56, 1.97, and 1.98, the attention of the United States Patent and Trademark Office is hereby directed to the references listed on the attached PTO/SB/08. It is respectfully requested that the information be expressly considered during the prosecution of the above-identified application, and that the references be made of record therein and appear among the "References Cited" on any patent to issue therefrom.

In accordance with 37 C.F.R. § 1.98(d)(1) the references are not supplied because they were previously cited by or submitted to the Office in prior application numbers 18/411476 filed January 12, 2024 and 17/225560 filed April 8, 2021 and relied on in the above-identified application for an earlier effective filing date under 35 U.S.C. § 120.

It is submitted that the Information Disclosure Statement is in compliance with 37 C.F.R. § 1.98, and the Examiner is respectfully requested to consider the listed references.

65348551

Applicant believes no fee is due with this response. However, if a fee is due, please charge our Deposit Account No. 50-0369, under Order No. NEURE-008/08US from which the undersigned is authorized to draw.

Dated: May 1, 2024

Respectfully submitted,

Electronic signature: /Matthew P. York/
Matthew P. York
Registration No.: 66,470
BROWN RUDNICK LLP
Brown Rudnick LLP
One Financial Center
Boston, Massachusetts 02111
(617) 856-8200
Attorney for Applicant

PTO/SB/08a (01-22)
Approved for use through 05/31/2024. OMB 0651-0031
U.S. Patent and Trademark Office; U.S. DEPARTMENT OF COMMERCE
Under the Paperwork Reduction Act of 1995, no persons are required to respond to a collection of information unless it contains a valid OMB control number.

INFORMATION DISCLOSURE STATEMENT BY APPLICANT (Not for submission under 37 CFR 1.99)		
	Application Number	18647755
	Filing Date	2024-04-26
	First Named Inventor	David Townley
	Art Unit	N/A
	Examiner Name	Not Yet Assigned
	Attorney Docket Number	NEURE-008/08US 35242/160

U.S.PATENTS Remove

Examiner Initial*	Cite No	Patent Number	Kind Code[1]	Issue Date	Name of Patentee or Applicant of cited Document	Pages,Columns,Lines where Relevant Passages or Relevant Figures Appear
	1	874178		1907-12-17	LEE DE FOREST	
	2	3117571		1964-01-14	FRY et al.	
	3	3538919		1970-11-10	MEYER ROBERT G	
	4	3941121		1976-03-02	Olinger et al.	
	5	3987795		1976-10-26	Morrison, Charles F.	
	6	4271848		1981-06-09	Turner et al.	
	7	4411266		1983-10-25	Cosman, Eric R.	
	8	4898169		1990-02-06	Norman et al.	

INFORMATION DISCLOSURE STATEMENT BY APPLICANT (Not for submission under 37 CFR 1.99)		
	Application Number	18647755
	Filing Date	2024-04-26
	First Named Inventor	David Townley
	Art Unit	N/A
	Examiner Name	Not Yet Assigned
	Attorney Docket Number	NEURE-008/08US 35242/160

	9	5184625		1993-02-09	Cottone, Jr. et al.	
	10	5395383		1995-03-07	Adams et al.	
	11	5456662		1995-10-10	Edwards et al.	
	12	5562720		1996-10-08	Stern et al.	
	13	5575788		1996-11-19	Baker et al.	
	14	5588429		1996-12-31	Isaacson et al.	
	15	5697536		1997-12-16	Eggers et al.	
	16	5697882		1997-12-16	Eggers et al.	
	17	5746224		1998-05-05	Edwards	
	18	5766605		1998-06-16	Sanders et al.	
	19	5800429		1998-09-01	Edwards, Stuart D.	

INFORMATION DISCLOSURE STATEMENT BY APPLICANT (Not for submission under 37 CFR 1.99)		
	Application Number	18647755
	Filing Date	2024-04-26
	First Named Inventor	David Townley
	Art Unit	N/A
	Examiner Name	Not Yet Assigned
	Attorney Docket Number	NEURE-008/08US 35242/160

	20	5823197		1998-10-20	Edwards	
	21	5827277		1998-10-27	Edwards	
	22	5836947		1998-11-17	Fleischman et al.	
	23	5843026		1998-12-01	Edwards et al.	
	24	6033397		2000-03-07	Laufer et al.	
	25	6045532		2000-04-04	Eggers et al.	
	26	6053172		2000-04-25	Hovda et al.	
	27	6063079		2000-05-16	Hovda et al.	
	28	6106518		2000-08-22	Wittenberger et al.	
	29	6139527		2000-10-31	Laufer et al.	
	30	6142991		2000-11-07	Schatzberger, Shaike	

INFORMATION DISCLOSURE STATEMENT BY APPLICANT (Not for submission under 37 CFR 1.99)		
	Application Number	18647755
	Filing Date	2024-04-26
	First Named Inventor	David Townley
	Art Unit	N/A
	Examiner Name	Not Yet Assigned
	Attorney Docket Number	NEURE-008/08US 35242/160

	31	6273886		2001-08-14	Edwards et al.	
	32	6332880		2001-12-25	Yang et al.	
	33	6352533		2002-03-05	Ellman et al.	
	34	6517534		2003-02-11	McGovern et al.	
	35	6517535		2003-02-11	Edwards, Stuart D.	
	36	6520185		2003-02-18	Bommannan et al.	
	37	6529756		2003-03-04	Phan et al.	
	38	6594518		2003-07-15	Benaron et al.	
	39	6595988		2003-07-22	Wittenberger et al.	
	40	6626899		2003-09-30	Houser et al.	
	41	6652548		2003-11-25	Evans et al.	

INFORMATION DISCLOSURE STATEMENT BY APPLICANT (Not for submission under 37 CFR 1.99)	Application Number	18647755
	Filing Date	2024-04-26
	First Named Inventor	David Townley
	Art Unit	N/A
	Examiner Name	Not Yet Assigned
	Attorney Docket Number	NEURE-008/08US 35242/160

	42	6669689		2003-12-30	Lehmann et al.	
	43	6685648		2004-02-03	Flaherty et al.	
	44	6746474		2004-06-08	Saadat	
	45	7195629		2007-03-27	Behl et al.	
	46	7232458		2007-06-19	Saadat	
	47	7285119		2007-10-23	Stewart et al.	
	48	7500985		2009-03-10	Saadat	
	49	7524318		2009-04-28	Young et al.	
	50	7608275		2009-10-27	Deem et al.	
	51	7654997		2010-02-02	Makower et al.	
	52	7655243		2010-02-02	Deem et al.	

INFORMATION DISCLOSURE STATEMENT BY APPLICANT (Not for submission under 37 CFR 1.99)		
	Application Number	18647755
	Filing Date	2024-04-26
	First Named Inventor	David Townley
	Art Unit	N/A
	Examiner Name	Not Yet Assigned
	Attorney Docket Number	NEURE-008/08US 35242/160

	53	7758571		2010-07-20	Saadat	
	54	7771409		2010-08-10	Chang et al.	
	55	7803150		2010-09-28	Chang et al.	
	56	8105817		2012-01-31	Deem et al.	
	57	8133497		2012-03-13	Deem et al.	
	58	8231613		2012-07-31	Baxter et al.	
	59	8338164		2012-12-25	Deem et al.	
	60	8372068		2013-02-12	Truckai	
	61	8382746		2013-02-26	Williams et al.	
	62	8460181		2013-06-11	Saadat et al.	
	63	8463359		2013-06-11	Saadat et al.	

INFORMATION DISCLOSURE STATEMENT BY APPLICANT (Not for submission under 37 CFR 1.99)	Application Number	18647755
	Filing Date	2024-04-26
	First Named Inventor	David Townley
	Art Unit	N/A
	Examiner Name	Not Yet Assigned
	Attorney Docket Number	NEURE-008/08US 35242/160

	64	8512324		2013-08-20	Abboud et al.	
	65	8636684		2014-01-28	Deem et al.	
	66	8747401		2014-06-10	Gonzalez et al.	
	67	8920414		2014-12-30	Stone et al.	
	68	8936594		2015-01-20	Wolf et al.	
	69	8939970		2015-01-27	Stone et al.	
	70	8961391		2015-02-24	Deem et al.	
	71	8986301		2015-03-24	Wolf et al.	
	72	8996137		2015-03-31	Ackermann et al.	
	73	9055965		2015-06-16	Chang et al.	
	74	9072597		2015-07-07	Wolf et al.	

	75	9101384		2015-08-11	Makower et al.	
	76	9179964		2015-11-10	Wolf et al.	
	77	9179967		2015-11-10	Wolf et al.	
	78	9179973		2015-11-10	Nabutovsky et al.	
	79	9233245	B2	2016-01-12	Lamensdorf et al.	
	80	9237924		2016-01-19	Wolf et al.	
	81	9333023		2016-05-10	Wittenberger	
	82	9370649		2016-06-21	Chang et al.	
	83	9415194		2016-08-16	Wolf et al.	
	84	9433463		2016-09-06	Wolf et al.	
	85	9440065		2016-09-13	Ackermann et al.	

INFORMATION DISCLOSURE STATEMENT BY APPLICANT (Not for submission under 37 CFR 1.99)		
	Application Number	18647755
	Filing Date	2024-04-26
	First Named Inventor	David Townley
	Art Unit	N/A
	Examiner Name	Not Yet Assigned
	Attorney Docket Number	NEURE-008/08US 35242/160

	86	9452010		2016-09-27	Wolf et al.	
	87	9486278		2016-11-08	Wolf et al.	
	88	9498278		2016-11-22	Couture et al.	
	89	9498283		2016-11-22	Deem et al.	
	90	9526571		2016-12-27	Wolf et al.	
	91	9649156		2017-05-16	Jenson et al.	
	92	9655667		2017-05-23	Hon	
	93	9687288		2017-06-27	Saadat	
	94	9687296		2017-06-27	Wolf et al.	
	95	9700707		2017-07-11	Deem et al.	
	96	9737702		2017-08-22	Ackermann et al.	

INFORMATION DISCLOSURE STATEMENT BY APPLICANT (Not for submission under 37 CFR 1.99)		
	Application Number	18647755
	Filing Date	2024-04-26
	First Named Inventor	David Townley
	Art Unit	N/A
	Examiner Name	Not Yet Assigned
	Attorney Docket Number	NEURE-008/08US 35242/160

	97	9763723		2017-09-19	Saadat	
	98	9763743		2017-09-19	Lin et al.	
	99	9788886		2017-10-17	Wolf et al.	
	100	9801752		2017-10-31	Wolf et al.	
	101	9888957		2018-02-13	Wolf et al.	
	102	9913682		2018-03-13	Wolf et al.	
	103	9943361		2018-04-17	Wolf et al.	
	104	10022529		2018-07-17	Deem et al.	
	105	10028780		2018-07-24	Wolf et al.	
	106	10028781		2018-07-24	Saadat	
	107	10052465		2018-08-21	Deem et al.	

INFORMATION DISCLOSURE STATEMENT BY APPLICANT (Not for submission under 37 CFR 1.99)		
	Application Number	18647755
	Filing Date	2024-04-26
	First Named Inventor	David Townley
	Art Unit	N/A
	Examiner Name	Not Yet Assigned
	Attorney Docket Number	NEURE-008/08US 35242/160

	108	10155108		2018-12-18	Ackermann et al.	
	109	10159538		2018-12-25	Lin et al.	
	110	10201687		2019-02-12	Saadat	
	111	10238861		2019-03-26	Ackermann et al.	
	112	10252048		2019-04-09	Loudin et al.	
	113	10265115		2019-04-23	Wolf et al.	
	114	10307200		2019-06-04	Saadat	
	115	10335221		2019-07-02	Wolf et al.	
	116	10363094		2019-07-30	Brannan et al.	
	117	10376300		2019-08-13	Wolf et al.	
	118	10398489		2019-09-03	Wolf et al.	

INFORMATION DISCLOSURE STATEMENT BY APPLICANT (Not for submission under 37 CFR 1.99)		
	Application Number	18647755
	Filing Date	2024-04-26
	First Named Inventor	David Townley
	Art Unit	N/A
	Examiner Name	Not Yet Assigned
	Attorney Docket Number	NEURE-008/08US 35242/160

	119	10448985		2019-10-22	Saadat	
	120	10456185		2019-10-29	Wolf et al.	
	121	10456186		2019-10-29	Wolf et al.	
	122	10485603		2019-11-26	Wolf et al.	
	123	10588682		2020-03-17	Kelly et al.	
	124	10610675		2020-04-07	Deem et al.	
	125	10687883		2020-06-23	Aklog et al.	
	126	10695557		2020-06-30	Townley et al.	
	127	10729897		2020-08-04	Deem et al.	
	128	10894011		2021-01-19	Deem et al.	
	129	11033318		2021-06-15	Wolf et al.	

INFORMATION DISCLOSURE STATEMENT BY APPLICANT (Not for submission under 37 CFR 1.99)		
	Application Number	18647755
	Filing Date	2024-04-26
	First Named Inventor	David Townley
	Art Unit	N/A
	Examiner Name	Not Yet Assigned
	Attorney Docket Number	NEURE-008/08US 35242/160

	130	11241271		2022-02-08	Wolf et al.	
	131	11304746		2022-04-19	Wolf et al.	
	132	11679077		2023-06-20	Deem et al.	
	133	11766286		2023-09-26	Wolf et al.	

If you wish to add additional U.S. Patent citation information please click the Add button. Add

U.S.PATENT APPLICATION PUBLICATIONS Remove

Examiner Initial*	Cite No	Publication Number	Kind Code[1]	Publication Date	Name of Patentee or Applicant of cited Document	Pages,Columns,Lines where Relevant Passages or Relevant Figures Appear
	1	20020068930	A1	2002-06-06	Tasto et al.	
	2	20020072742	A1	2002-06-13	Schaefer et al.	
	3	20020177765	A1	2002-11-28	Bowe et al.	
	4	20030016085	A1	2003-01-23	Yamazaki	
	5	20030212394	A1	2003-11-13	Pearson et al.	

INFORMATION DISCLOSURE STATEMENT BY APPLICANT (Not for submission under 37 CFR 1.99)		
	Application Number	18647755
	Filing Date	2024-04-26
	First Named Inventor	David Townley
	Art Unit	N/A
	Examiner Name	Not Yet Assigned
	Attorney Docket Number	NEURE-008/08US 35242/160

	6	20050080409	A1	2005-04-14	Young et al.	
	7	20050171536	A1	2005-08-04	Phan et al.	
	8	20050171574	A1	2005-08-04	Rubinsky et al.	
	9	20050171582	A1	2005-08-04	Matlock	
	10	20050171583	A1	2005-08-04	Mosher et al.	
	11	20050187546	A1	2005-08-25	Bek et al.	
	12	20050240147	A1	2005-10-27	Makower et al.	
	13	20050283148	A1	2005-12-22	Janssen et al.	
	14	20050288730	A1	2005-12-29	Deem et al.	
	15	20060036237	A1	2006-02-16	Davison et al.	
	16	20060055942	A1	2006-03-16	Krattiger, Beat	

INFORMATION DISCLOSURE STATEMENT BY APPLICANT (Not for submission under 37 CFR 1.99)		
	Application Number	18647755
	Filing Date	2024-04-26
	First Named Inventor	David Townley
	Art Unit	N/A
	Examiner Name	Not Yet Assigned
	Attorney Docket Number	NEURE-008/08US 35242/160

	17	20060100620	A1	2006-05-11	Daniel et al.	
	18	20060106375	A1	2006-05-18	Werneth et al.	
	19	20060116599	A1	2006-06-01	Davis, Grant E.	
	20	20060149226	A1	2006-07-06	McCullagh et al.	
	21	20060247683	A1	2006-11-02	Danek et al.	
	22	20070006975	A1	2007-01-11	Corghi, Remo	
	23	20070031341	A1	2007-02-08	DiMauro et al.	
	24	20070032786	A1	2007-02-08	Francischelli, David E.	
	25	20070083194	A1	2007-04-12	Kunis et al.	
	26	20070083195	A1	2007-04-12	Werneth et al.	
	27	20070093803	A1	2007-04-26	Dalbec et al.	

INFORMATION DISCLOSURE STATEMENT BY APPLICANT (Not for submission under 37 CFR 1.99)		
	Application Number	18647755
	Filing Date	2024-04-26
	First Named Inventor	David Townley
	Art Unit	N/A
	Examiner Name	Not Yet Assigned
	Attorney Docket Number	NEURE-008/08US 35242/160

	28	20070129760	A1	2007-06-07	Demarais et al.	
	29	20070173760	A1	2007-07-26	Fedenia et al.	
	30	20070219600	A1	2007-09-20	Gertner et al.	
	31	20070233191	A1	2007-10-04	Parmer, Jonathan B.	
	32	20070265608	A1	2007-11-15	Hernandez, Lyndon V.	
	33	20070287994	A1	2007-12-13	Patel, Pankaj Amrit	
	34	20070299433	A1	2007-12-27	Williams et al.	
	35	20080021369	A1	2008-01-24	Deem et al.	
	36	20080154250	A1	2008-06-26	Makower et al.	
	37	20080287908	A1	2008-11-20	Muni et al.	
	38	20090198216	A1	2009-08-06	Muni et al.	

INFORMATION DISCLOSURE STATEMENT BY APPLICANT (Not for submission under 37 CFR 1.99)	Application Number	18647755
	Filing Date	2024-04-26
	First Named Inventor	David Townley
	Art Unit	N/A
	Examiner Name	Not Yet Assigned
	Attorney Docket Number	NEURE-008/08US 35242/160

	39	20090306644	A1	2009-12-10	Mayse et al.	
	40	20090318914	A1	2009-12-24	Utley et al.	
	41	20100049187	A1	2010-02-25	Carlton et al.	
	42	20100057048	A1	2010-03-04	Eldredge	
	43	20100168737	A1	2010-07-01	Grunewald	
	44	20100204560	A1	2010-08-12	Salahieh et al.	
	45	20100305715	A1	2010-12-02	Mathis et al.	
	46	20110004207	A1	2011-01-06	Wallace et al.	
	47	20110152855	A1	2011-06-23	Mayse et al.	
	48	20110238057	A1	2011-09-29	Moss et al.	
	49	20110264086	A1	2011-10-27	Ingle	

INFORMATION DISCLOSURE STATEMENT BY APPLICANT (Not for submission under 37 CFR 1.99)		
	Application Number	18647755
	Filing Date	2024-04-26
	First Named Inventor	David Townley
	Art Unit	N/A
	Examiner Name	Not Yet Assigned
	Attorney Docket Number	NEURE-008/08US 35242/160

	50	20120078377	A1	2012-03-29	Gonzales et al.	
	51	20120191003		2012-07-26	Robert Garabedian	
	52	20120259326	A1	2012-10-11	Brannan et al.	
	53	20120323214	A1	2012-12-20	Shantha	
	54	20120323227	A1	2012-12-20	Wolf et al.	
	55	20120323232	A1	2012-12-20	Wolf et al.	
	56	20130018367	A1	2013-01-17	Wu et al.	
	57	20130123778	A1	2013-05-16	RICHARDSON et al.	
	58	20130158475	A1	2013-06-20	Xia et al.	
	59	20130165916	A1	2013-06-27	MATHUR et al.	
	60	20130172877		2013-07-04	Boston Scientific Scimed, Inc.	

INFORMATION DISCLOSURE STATEMENT BY APPLICANT (Not for submission under 37 CFR 1.99)	Application Number	18647755
	Filing Date	2024-04-26
	First Named Inventor	David Townley
	Art Unit	N/A
	Examiner Name	Not Yet Assigned
	Attorney Docket Number	NEURE-008/08US 35242/160

	61	20130178910	A1	2013-07-11	Azamian et al.	
	62	20130253387	A1	2013-09-26	Bonutti et al.	
	63	20130253389	A1	2013-09-26	JUTO et al.	
	64	20130282084	A1	2013-10-24	Mathur et al.	
	65	20130289552	A1	2013-10-31	Young, Kimbolt	
	66	20140005706	A1	2014-01-02	Gelfand et al.	
	67	20140018792	A1	2014-01-16	Gang et al.	
	68	20140025069	A1	2014-01-23	WILLARD et al.	
	69	20140074091	A1	2014-03-13	ARYA et al.	
	70	20140100557	A1	2014-04-10	Bohner et al.	
	71	20140114233	A1	2014-04-24	Deem et al.	

INFORMATION DISCLOSURE STATEMENT BY APPLICANT (Not for submission under 37 CFR 1.99)	Application Number	18647755
	Filing Date	2024-04-26
	First Named Inventor	David Townley
	Art Unit	N/A
	Examiner Name	Not Yet Assigned
	Attorney Docket Number	NEURE-008/08US 35242/160

	72	20140180196	A1	2014-06-26	STONE et al.	
	73	20140200581	A1	2014-07-17	Aluru et al.	
	74	20140243793	A1	2014-08-28	Morriss et al.	
	75	20140276752	A1	2014-09-18	WANG et al.	
	76	20140303665	A1	2014-10-09	Gerrans et al.	
	77	20150006606	A1	2015-01-01	Fleury et al.	
	78	20150018818	A1	2015-01-15	WILLARD et al.	
	79	20150031946	A1	2015-01-29	SAADAT et al.	
	80	20150066006	A1	2015-03-05	Srivastava	
	81	20150112321	A1	2015-04-23	Cadouri	
	82	20150119881	A1	2015-04-30	BAGLEY et al.	

INFORMATION DISCLOSURE STATEMENT BY APPLICANT (Not for submission under 37 CFR 1.99)		
	Application Number	18647755
	Filing Date	2024-04-26
	First Named Inventor	David Townley
	Art Unit	N/A
	Examiner Name	Not Yet Assigned
	Attorney Docket Number	NEURE-008/08US 35242/160

	83	20150150624	A1	2015-06-04	Petersohn	
	84	20150164571	A1	2015-06-18	SAADAT	
	85	20150182282	A1	2015-07-02	Zemel et al.	
	86	20150202003	A1	2015-07-23	WOLF et al.	
	87	20150257754	A1	2015-09-17	WENG et al.	
	88	20150257824	A1	2015-09-17	Mauch	
	89	20150257825	A1	2015-09-17	Kelly et al.	
	90	20150265812	A1	2015-09-24	LALONDE	
	91	20150289750	A1	2015-10-15	Stigall et al.	
	92	20150297282	A1	2015-10-22	CADOURI	
	93	20150313669	A1	2015-11-05	Darmos et al.	

INFORMATION DISCLOSURE STATEMENT BY APPLICANT (Not for submission under 37 CFR 1.99)	Application Number	18647755
	Filing Date	2024-04-26
	First Named Inventor	David Townley
	Art Unit	N/A
	Examiner Name	Not Yet Assigned
	Attorney Docket Number	NEURE-008/08US 35242/160

	94	20150351836	A1	2015-12-10	PRUTCHI	
	95	20160008053	A1	2016-01-14	MATHUR et al.	
	96	20160015450	A1	2016-01-21	WOLF et al.	
	97	20160045277	A1	2016-02-18	LIN et al.	
	98	20160120598	A1	2016-05-05	Brink et al.	
	99	20160128767	A1	2016-05-12	Azamian et al.	
	100	20160250474	A1	2016-09-01	Stack et al.	
	101	20160287315	A1	2016-10-06	Wolf et al.	
	102	20160331459	A1	2016-11-17	Townley et al.	
	103	20160354136	A1	2016-12-08	Saadat	
	104	20170071494	A1	2017-03-16	Solis et al.	

INFORMATION DISCLOSURE STATEMENT BY APPLICANT (Not for submission under 37 CFR 1.99)		
	Application Number	18647755
	Filing Date	2024-04-26
	First Named Inventor	David Townley
	Art Unit	N/A
	Examiner Name	Not Yet Assigned
	Attorney Docket Number	NEURE-008/08US 35242/160

	105	20170095252	A1	2017-04-06	Smith et al.	
	106	20170095288	A1	2017-04-06	Wolf et al.	
	107	20170151014	A1	2017-06-01	Perfler	
	108	20170209199	A1	2017-07-27	Wolf et al.	
	109	20170215950	A1	2017-08-03	GROSS et al.	
	110	20170215952	A1	2017-08-03	Nair	
	111	20170231474	A1	2017-08-17	Saadat et al.	
	112	20170231651	A1	2017-08-17	DINGER et al.	
	113	20170245924	A1	2017-08-31	WOLF et al.	
	114	20170252089	A1	2017-09-07	Hester et al.	
	115	20170252100	A1	2017-09-07	WOLF et al.	

INFORMATION DISCLOSURE STATEMENT BY APPLICANT (Not for submission under 37 CFR 1.99)	Application Number	18647755
	Filing Date	2024-04-26
	First Named Inventor	David Townley
	Art Unit	N/A
	Examiner Name	Not Yet Assigned
	Attorney Docket Number	NEURE-008/08US 35242/160

	116	20170266422	A1	2017-09-21	Deem et al.	
	117	20170312021	A1	2017-11-02	Pilcher et al.	
	118	20180042471	A1	2018-02-15	Chandler et al.	
	119	20180049802	A1	2018-02-22	YANG et al.	
	120	20180063678	A1	2018-03-01	Zhu et al.	
	121	20180078327	A1	2018-03-22	Lin et al.	
	122	20180103994	A1	2018-04-19	Fox et al.	
	123	20180125560	A1	2018-05-10	Saadat et al.	
	124	20180133460	A1	2018-05-17	Townley et al.	
	125	20180153375	A1	2018-06-07	Saadat et al.	
	126	20180161577	A1	2018-06-14	Goedeke et al.	

INFORMATION DISCLOSURE STATEMENT BY APPLICANT (Not for submission under 37 CFR 1.99)		
	Application Number	18647755
	Filing Date	2024-04-26
	First Named Inventor	David Townley
	Art Unit	N/A
	Examiner Name	Not Yet Assigned
	Attorney Docket Number	NEURE-008/08US 35242/160

	127	20180168503	A1	2018-06-21	Waldhauser et al.	
	128	20180169414	A1	2018-06-21	Goedeke et al.	
	129	20180177542	A1	2018-06-28	WOLF et al.	
	130	20180177546	A1	2018-06-28	DINGER et al.	
	131	20180185085	A1	2018-07-05	Wolf et al.	
	132	20180228533	A1	2018-08-16	WOLF et al.	
	133	20180317993	A1	2018-11-08	Saadat	
	134	20180317997	A1	2018-11-08	DINGER et al.	
	135	20180344378	A1	2018-12-06	WOLF et al.	
	136	20180344411	A1	2018-12-06	Fahey et al.	
	137	20190069949	A1	2019-03-07	Vrba et al.	

INFORMATION DISCLOSURE STATEMENT BY APPLICANT (Not for submission under 37 CFR 1.99)	Application Number	18647755
	Filing Date	2024-04-26
	First Named Inventor	David Townley
	Art Unit	N/A
	Examiner Name	Not Yet Assigned
	Attorney Docket Number	NEURE-008/08US 35242/160

	138	20190076185	A1	2019-03-14	DINGER et al.	
	139	20190083157	A1	2019-03-21	Saadat	
	140	20190175242	A1	2019-06-13	WOLF et al.	
	141	20190223944	A1	2019-07-25	Coates	
	142	20190231409	A1	2019-08-01	WOLF et al.	
	143	20190231429	A1	2019-08-01	Townley et al.	
	144	20190239953	A1	2019-08-08	Townley et al.	
	145	20190239954	A1	2019-08-08	Townley et al.	
	146	20190239955	A1	2019-08-08	Townley et al.	
	147	20190239956	A1	2019-08-08	Townley et al.	
	148	20190239957	A1	2019-08-08	Townley et al.	

INFORMATION DISCLOSURE STATEMENT BY APPLICANT (Not for submission under 37 CFR 1.99)		
	Application Number	18647755
	Filing Date	2024-04-26
	First Named Inventor	David Townley
	Art Unit	N/A
	Examiner Name	Not Yet Assigned
	Attorney Docket Number	NEURE-008/08US 35242/160

	149	20190282289	A1	2019-09-19	WOLF et al.	
	150	20190314620	A1	2019-10-17	Chang et al.	
	151	20200078134	A1	2020-03-12	Loyd et al.	
	152	20200086112	A1	2020-03-19	Townley et al.	
	153	20200107882	A1	2020-04-09	Townley et al.	
	154	20200129223	A1	2020-04-30	Angeles et al.	
	155	20200289185	A1	2020-09-17	FORSYTH et al.	
	156	20210315627	A1	2021-10-14	BABKIN et al.	

If you wish to add additional U.S. Published Application citation information please click the Add button. Add

FOREIGN PATENT DOCUMENTS Remove

Examiner Initial*	Cite No	Foreign Document Number[3]	Country Code[2] ¡	Kind Code[4]	Publication Date	Name of Patentee or Applicant of cited Document	Pages,Columns,Lines where Relevant Passages or Relevant Figures Appear	T[5]
	1	2929852	EP	A1	2015-10-14	Holaira, Inc		☐

EFS Web 2.1.18

INFORMATION DISCLOSURE STATEMENT BY APPLICANT (Not for submission under 37 CFR 1.99)		
	Application Number	18647755
	Filing Date	2024-04-26
	First Named Inventor	David Townley
	Art Unit	N/A
	Examiner Name	Not Yet Assigned
	Attorney Docket Number	NEURE-008/08US 35242/160

	2	2001-120565	JP	A	2001-05-08	Olympus Optical Co		☒
	3	2001-526077	JP	A	2001-12-18	Somnus Medical Technologies Inc		☒
	4	2007/537784	JP	A	2007-12-27	Acclarent, Inc.		☒
	5	2009-538641	JP	A	2009-11-12	THE FOUNDRY, LLC		☒
	6	2012-143573	JP	A	2012-08-02	Medtronic Ardian Luxembourg Sarl		☒
	7	2015-507964	JP	A	2015-03-16	DOLOR TECHNOLOGIES, LLC		☒
	8	2018-515314	JP	A	2018-06-14	National University of Ireland Galway NUI		☒
	9	01/17450	WO	A1	2001-03-15	Curon Medical, Inc		☐
	10	2007/008954	WO	A2	2007-01-18	Ablation Frontiers		☐
	11	2009/154456	WO	A1	2009-12-23	Kerphos B V		☐
	12	2010/077980	WO	A1	2010-07-08	Aardvark Medical, Inc		☐

INFORMATION DISCLOSURE STATEMENT BY APPLICANT (Not for submission under 37 CFR 1.99)		
	Application Number	18647755
	Filing Date	2024-04-26
	First Named Inventor	David Townley
	Art Unit	N/A
	Examiner Name	Not Yet Assigned
	Attorney Docket Number	NEURE-008/08US 35242/160

	13	2015/013252	WO	A1	2015-01-29	Wedge Therapeutics, LLC		☐
	14	2015/048806	WO	A2	2015-04-02	Nidus Medical, LLC		☐
	15	2016/134264	WO	A1	2016-08-25	Boston Scient Scimed Inc		☐
	16	2016/183337	WO	A2	2016-11-17	Nat Univ Ireland Galway		☐
	17	2018/087601	WO	A1	2018-05-17	National University Of Ireland, Galway		☐
	18	2021/205230	WO	A1	2021-10-14	Neurent Medical Ltd		☐
	19	2021/205231	WO	A1	2021-10-14	Neurent Medical Ltd		☐
	20	2021/260435	WO	A1	2021-12-30	Neurent Medical Ltd		☐
	21	94/10921	WO	A1	1994-05-26	Ep Technologies, Inc		☐

If you wish to add additional Foreign Patent Document citation information please click the Add button Add

NON-PATENT LITERATURE DOCUMENTS Remove

Examiner Initials*	Cite No	Include name of the author (in CAPITAL LETTERS), title of the article (when appropriate), title of the item (book, magazine, journal, serial, symposium, catalog, etc), date, pages(s), volume-issue number(s), publisher, city and/or country where published.	T5

EFS Web 2.1.18

INFORMATION DISCLOSURE STATEMENT BY APPLICANT (Not for submission under 37 CFR 1.99)		
	Application Number	18647755
	Filing Date	2024-04-26
	First Named Inventor	David Townley
	Art Unit	N/A
	Examiner Name	Not Yet Assigned
	Attorney Docket Number	NEURE-008/08US 35242/160

	1	Annotated Perfler Fig 11 (2022)	☐
	2	Anonymous: Flexible electronics - Wikipedia, 8 August 202, pages 1-9	☐
	3	Arora, 1980, Cryodestruction of Vidian Nerve Branches, Indian Journal of Otolaryngology, 32(3):80-82	☐
	4	Chen, 2005, Radiofrequency treatment of nasal posterior-under nerve ethmoidal nerve and infraturbinal for perennial allergic rhinitis under nasal endoscope, China Journal of Endoscopy, 11(3):239-243	☐
	5	Fang, 2005, Nasal endoscopy combined with multiple radiofrequency for perennial allergic rhinitis, J. First Mil. Medic Univ., 25(7):876-877	☐
	6	Horesh, 2006, Some novel approaches in modelling and image reconstruction for multi-frequency Electrical Impedance Tomography of the human brain, Thesis (Ph.D.)--University of London, University College London (United Kingdom), 2006.; Publication Number: AAT U592053	☐
	7	Ikeda, 2008, Effect of resection of the posterior nasal nerve on functional and morphological changes in the inferior turbinate mucosa, Acta Oto-Laryngologica, 128, pages 1337-1341	☐
	8	International Search Report and Written Opinion for International Application No. PCT/US2016/032132, filed May 12, 2016, Applicant: NATIONAL UNIVERSITY OF IRELAND, GALWAY, Date of Mailing: November 14, 2016, 26 pages	☐
	9	International Search Report and Written Opinion issued in International Application No. PCT/IB2017/001541, date of mailing: April 3, 2018, 15 pages	☐
	10	International Search Report and Written Opinion issued in International Application No. PCT/IB2019/001298, date of mailing May 12, 2020, 15 pages	☐
	11	International Search Report and Written Opinion issued in International Application No. PCT/IB2020/000544, date of mailing January 11, 2021, 15 pages	☐

INFORMATION DISCLOSURE STATEMENT BY APPLICANT (Not for submission under 37 CFR 1.99)		
	Application Number	18647755
	Filing Date	2024-04-26
	First Named Inventor	David Townley
	Art Unit	N/A
	Examiner Name	Not Yet Assigned
	Attorney Docket Number	NEURE-008/08US 35242/160

	12	International Search Report and Written Opinion issued in International Application No. PCT/IB2021/000234, date of mailing: August 6, 2021, 14 pages	☐
	13	International Search Report and Written Opinion issued in International Application No. PCT/IB2021/000243, date of mailing: August 25, 2021, 15 pages	☐
	14	International Search Report and Written Opinion issued in International Application No. PCT/IB2021/000597, date of mailing: January 22, 2022, 18 pages	☐
	15	International Search Report and Written Opinion issued in International Application No. PCT/IB2021/000667, date of mailing: February 2, 2022, 17 pages	☐
	16	International Search Report and Written Opinion issued in International Application No. PCT/IB2021/000699, date mailing: February 4, 2022, 28 pages	☐
	17	International Search Report and Written Opinion issued in International Application No. PCT/IB2021/000700, date of mailing: April 4, 2022, 20 pages	☐
	18	Kanaya, 2009, Endoscopic posterior nasal neurectomy: an alternative to Vidian neurectomy, Clinical and Experimental Allergy Reviews, pages 24-27	☐
	19	Kanaya, 2009, Endoscopic posterior nasal neurectomy: an alternative to Vidian neurectomy, Clinical and Experimental Allergy Reviews, pages 24-27	☐
	20	Kikawada, 2007, Endoscopic posterior nasal neurectomy: An alternative to vidian neurectomy, Operative Techniques in Otolaryngology, 18(4), 5 pages	☐
	21	Kikawada, 2007, Endoscopic posterior nasal neurectomy: An alternative to vidian neurectomy, Operative Techniques in Otolaryngology, 18(4), 5 pages	☐
	22	Kobayashi, 2012, Resection of peripheral branches of the posterior nasal nerve compared to conventional posterior neuectomy in severe allergic rhinitis, Auris Nasus Larynx, 39 (2012):593-596	☐

INFORMATION DISCLOSURE STATEMENT BY APPLICANT (Not for submission under 37 CFR 1.99)		
	Application Number	18647755
	Filing Date	2024-04-26
	First Named Inventor	David Townley
	Art Unit	N/A
	Examiner Name	Not Yet Assigned
	Attorney Docket Number	NEURE-008/08US 35242/160

	23	Kobayashi, 2012, Resection of peripheral branches of the posterior nasal nerve compared to conventional posterior neuectomy in severe allergic rhinitis, Auris Nasus Larynx, 39 (2012):593-596	☐
	24	Kong, 2005, Low-temperature plasma ablation of inferior turbinate for the treatment of perennial allergic rhinitis, 19:5 J Clin Otorhinolaryngol (China), 19:5:214	☐
	25	Lane, 2004, Nasal anatomy and physiology, Facial Plast Surg Clin North Am., 12(4):387-395	☐
	26	Lee, 2003, Sampling and Reconstruction, In: Structure and Interpretation of Singals and Systems, Reading, MA: Addison-Wesley, ISBN: 0-201-74551-8, Pearson Education, Inc., pp. 373-392	☐
	27	Liang, 1999, Radiofrequency treatment of ethmoidal nerve with allergic rhinitis under nasal endoscopy, J. Clin Otorhinolaryngol, 13(8):341-342	☐
	28	Lin, 2003, Radiofrequency for the treatment of allergic rhinits refactory to medical therapy, The Laryngoscope, 113, pages 673-678	☐
	29	Lin, 2003, Radiofrequency for the treatment of allergic rhinits refactory to medical therapy, The Laryngoscope, 113, pages 673-678	☐
	30	Lin, 2010, Long-term results of radiofrequency turbinoplasty for allergic rhinits refactor to medical therapy, Arch Otolaryngol Head Neck Surg, 136(9) 4 pages	☐
	31	Lin, 2010, Long-term results of radiofrequency turbinoplasty for allergic rhinits refactor to medical therapy, Arch Otolaryngol Head Neck Surg, 136(9) 4 pages	☐
	32	Min, 2015, Impedance Detection, In: Li, D. (eds) Encyclopedia of Microfluidics and Nanofluidics, Springer, New York, NY, https://doi.org/10.1007/978-1-4614-5491-5_1783, pp. 1333-1472	☐
	33	Neubauer, 2022, Endothelial cells and coagulation, Cell Tissue Res, 387:391-398	☐

INFORMATION DISCLOSURE STATEMENT BY APPLICANT (Not for submission under 37 CFR 1.99)		
	Application Number	18647755
	Filing Date	2024-04-26
	First Named Inventor	David Townley
	Art Unit	N/A
	Examiner Name	Not Yet Assigned
	Attorney Docket Number	NEURE-008/08US 35242/160

	34	Ozenbeger, 1970, Cryosurgery in chronic rhinitis, The Laryngoscope, vol. 8, issue 5, pp. 723-734	☐
	35	Ozenberger, 1973, Cryosurgery for the treatment of chronic rhinitis, The Laryngoscope, vol. 83, issue 4, pp. 508-516	☐
	36	Ozenberger, 1973, Cryosurgery for the treatment of chronic rhinitis, The Laryngoscope, vol. 83, issue 4, pp. 508-516	☐
	37	Paterno, 2009, Frequency-dpmain reconstruction of singals in electrical bioimpedance spectroscopy, Med Biol Eng Comput, 47(10):1093-1102	☐
	38	Yang, 2014, Electrical Impedance Tomography: Algorithms and Application, University of Bath, 143 pages	☐

If you wish to add additional non-patent literature document citation information please click the Add button Add

EXAMINER SIGNATURE

Examiner Signature		Date Considered	

*EXAMINER: Initial if reference considered, whether or not citation is in conformance with MPEP 609. Draw line through a citation if not in conformance and not considered. Include copy of this form with next communication to applicant.

[1] See Kind Codes of USPTO Patent Documents at www.USPTO.GOV or MPEP 901.04. [2] Enter office that issued the document, by the two-letter code (WIPO Standard ST.3). [3] For Japanese patent documents, the indication of the year of the reign of the Emperor must precede the serial number of the patent document. [4] Kind of document by the appropriate symbols as indicated on the document under WIPO Standard ST.16 if possible. [5] Applicant is to place a check mark here if English language translation is attached.

INFORMATION DISCLOSURE STATEMENT BY APPLICANT (Not for submission under 37 CFR 1.99)		
	Application Number	18647755
	Filing Date	2024-04-26
	First Named Inventor	David Townley
	Art Unit	N/A
	Examiner Name	Not Yet Assigned
	Attorney Docket Number	NEURE-008/08US 35242/160

CERTIFICATION STATEMENT

Please see 37 CFR 1.97 and 1.98 to make the appropriate selection(s):

☐ That each item of information contained in the information disclosure statement was first cited in any communication from a foreign patent office in a counterpart foreign application not more than three months prior to the filing of the information disclosure statement. See 37 CFR 1.97(e)(1).

OR

☐ That no item of information contained in the information disclosure statement was cited in a communication from a foreign patent office in a counterpart foreign application, and, to the knowledge of the person signing the certification after making reasonable inquiry, no item of information contained in the information disclosure statement was known to any individual designated in 37 CFR 1.56(c) more than three months prior to the filing of the information disclosure statement. See 37 CFR 1.97(e)(2).

☐ See attached certification statement.

☐ The fee set forth in 37 CFR 1.17 (p) has been submitted herewith.

☒ A certification statement is not submitted herewith.

SIGNATURE

A signature of the applicant or representative is required in accordance with CFR 1.33, 10.18. Please see CFR 1.4(d) for the form of the signature.

Signature	/Matthew P. York/	Date (YYYY-MM-DD)	2024-05-01
Name/Print	Matthew P. York	Registration Number	66,470

This collection of information is required by 37 CFR 1.97 and 1.98. The information is required to obtain or retain a benefit by the public which is to file (and by the USPTO to process) an application. Confidentiality is governed by 35 U.S.C. 122 and 37 CFR 1.14. This collection is estimated to take 1 hour to complete, including gathering, preparing and submitting the completed application form to the USPTO. Time will vary depending upon the individual case. Any comments on the amount of time you require to complete this form and/or suggestions for reducing this burden, should be sent to the Chief Information Officer, U.S. Patent and Trademark Office, U.S. Department of Commerce, P.O. Box 1450, Alexandria, VA 22313-1450. DO NOT SEND FEES OR COMPLETED FORMS TO THIS ADDRESS. **SEND TO: Commissioner for Patents, P.O. Box 1450, Alexandria, VA 22313-1450.**

Privacy Act Statement

The Privacy Act of 1974 (P.L. 93-579) requires that you be given certain information in connection with your submission of the attached form related to a patent application or patent. Accordingly, pursuant to the requirements of the Act, please be advised that: (1) the general authority for the collection of this information is 35 U.S.C. 2(b)(2); (2) furnishing of the information solicited is voluntary; and (3) the principal purpose for which the information is used by the U.S. Patent and Trademark Office is to process and/or examine your submission related to a patent application or patent. If you do not furnish the requested information, the U.S. Patent and Trademark Office may not be able to process and/or examine your submission, which may result in termination of proceedings or abandonment of the application or expiration of the patent.

The information provided by you in this form will be subject to the following routine uses:

1. The information on this form will be treated confidentially to the extent allowed under the Freedom of Information Act (5 U.S.C. 552) and the Privacy Act (5 U.S.C. 552a). Records from this system of records may be disclosed to the Department of Justice to determine whether the Freedom of Information Act requires disclosure of these record s.

2. A record from this system of records may be disclosed, as a routine use, in the course of presenting evidence to a court, magistrate, or administrative tribunal, including disclosures to opposing counsel in the course of settlement negotiations.

3. A record in this system of records may be disclosed, as a routine use, to a Member of Congress submitting a request involving an individual, to whom the record pertains, when the individual has requested assistance from the Member with respect to the subject matter of the record.

4. A record in this system of records may be disclosed, as a routine use, to a contractor of the Agency having need for the information in order to perform a contract. Recipients of information shall be required to comply with the requirements of the Privacy Act of 1974, as amended, pursuant to 5 U.S.C. 552a(m).

5. A record related to an International Application filed under the Patent Cooperation Treaty in this system of records may be disclosed, as a routine use, to the International Bureau of the World Intellectual Property Organization, pursuant to the Patent Cooperation Treaty.

6. A record in this system of records may be disclosed, as a routine use, to another federal agency for purposes of National Security review (35 U.S.C. 181) and for review pursuant to the Atomic Energy Act (42 U.S.C. 218(c)).

7. A record from this system of records may be disclosed, as a routine use, to the Administrator, General Services, or his/her designee, during an inspection of records conducted by GSA as part of that agency's responsibility to recommend improvements in records management practices and programs, under authority of 44 U.S.C. 2904 and 2906. Such disclosure shall be made in accordance with the GSA regulations governing inspection of records for this purpose, and any other relevant (i.e., GSA or Commerce) directive. Such disclosure shall not be used to make determinations about individuals.

8. A record from this system of records may be disclosed, as a routine use, to the public after either publication of the application pursuant to 35 U.S.C. 122(b) or issuance of a patent pursuant to 35 U.S.C. 151. Further, a record may be disclosed, subject to the limitations of 37 CFR 1.14, as a routine use, to the public if the record was filed in an application which became abandoned or in which the proceedings were terminated and which application is referenced by either a published application, an application open to public inspections or an issued patent.

9. A record from this system of records may be disclosed, as a routine use, to a Federal, State, or local law enforcement agency, if the USPTO becomes aware of a violation or potential violation of law or regulation.

UNITED STATES
PATENT AND TRADEMARK OFFICE

P.O. Box 1450
Alexandria, VA 22313 - 1450
www.uspto.gov

ELECTRONIC ACKNOWLEDGEMENT RECEIPT

APPLICATION #	RECEIPT DATE / TIME	ATTORNEY DOCKET #
18/647,755	**05/01/2024 04:50:17 PM Z ET**	**NEURE-008/08US 35242/160**

Title of Invention

SYSTEMS AND METHODS FOR THERAPEUTIC NASAL TREATMENT USING HANDHELD DEVICE

Application Information

APPLICATION TYPE	Utility - Nonprovisional Application under 35 USC 111(a)	PATENT #	-
CONFIRMATION #	9306	FILED BY	Kelley Warren
PATENT CENTER #	65314520	FILING DATE	-
CUSTOMER #	21710	FIRST NAMED INVENTOR	David Townley
CORRESPONDENCE ADDRESS	-	AUTHORIZED BY	Matthew York

Documents

TOTAL DOCUMENTS: 2

DOCUMENT	PAGES	DESCRIPTION	SIZE (KB)
35242_160_Information_Disclosure_Statement_Fillable_PDF.pdf	35	Information Disclosure Statement (IDS) Form (SB08)	1243 KB
35242_160_Information_Disclosure_Statement.pdf	2	Transmittal Letter	112 KB

Digest

DOCUMENT	MESSAGE DIGEST(SHA-512)
35242_160_Information_Disclos	F55EE24EA611196ECB0918F54B4D39312E8C915982CB461D5

ure_Statement_Fillable_PDF.pdf	8F5C21207E1F69DFD083469E2626866C9A324CA89493DC87F754E2136E101B3DB1E7D76DB32652F
35242_160_Information_Disclosure_Statement.pdf	D1427C6A2C1637136F05F09C4F37D77C3C50207BFC227278D0ED8AFE9D7FD00487F92783B5853A220A66B7B6D512E77D9F50E70E98B56CFAAB28C88FB4AAB494

This Acknowledgement Receipt evidences receipt on the noted date by the USPTO of the indicated documents, characterized by the applicant, and including page counts, where applicable. It serves as evidence of receipt similar to a Post Card, as described in MPEP 503.

New Applications Under 35 U.S.C. 111

If a new application is being filed and the application includes the necessary components for filing date (see 37 CFR 1.53(b)-(d) and MPEP 506), a Filing Receipt (37 CFR 1.54) will be issued in due course and the date shown on this Acknowledgement Receipt will establish the filing date of the application

National Stage of an International Application under 35 U.S.C. 371

If a timely submission to enter the national stage of an international application is compliant with the conditions of 35 U.S.C. 371 and other applicable requirements a Form PCT/DO/EO/903 indicating acceptance of the application as a national stage submission under 35 U.S.C. 371 will be issued in addition to the Filing Receipt, in due course.

New International Application Filed with the USPTO as a Receiving Office

If a new international application is being filed and the international application includes the necessary components for an international filing date (see PCT Article 11 and MPEP 1810), a Notification of the International Application Number and of the International Filing Date (Form PCT/RO/105) will be issued in due course, subject to prescriptions concerning national security, and the date shown on this Acknowledgement Receipt will establish the international filing date of the application.

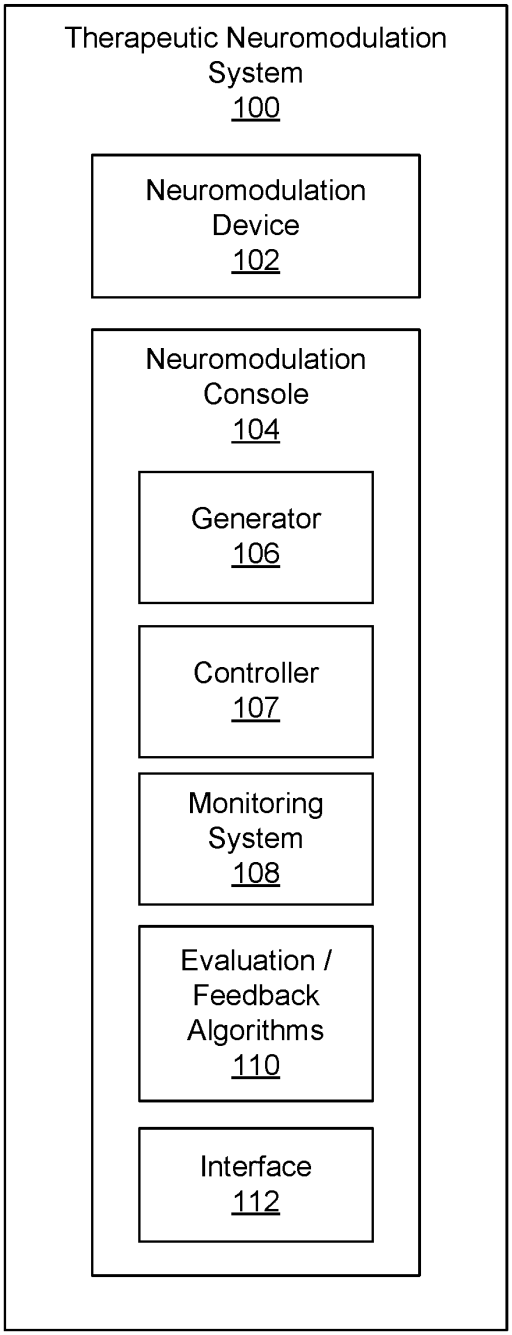
Therapeutic Neuromodulation System
100
Neuromodulation Device
102
Neuromodulation Console
104
Generator
106
Controller
107
Monitoring System
108
Evaluation / Feedback Algorithms
110
Interface
112

FIG. 1A

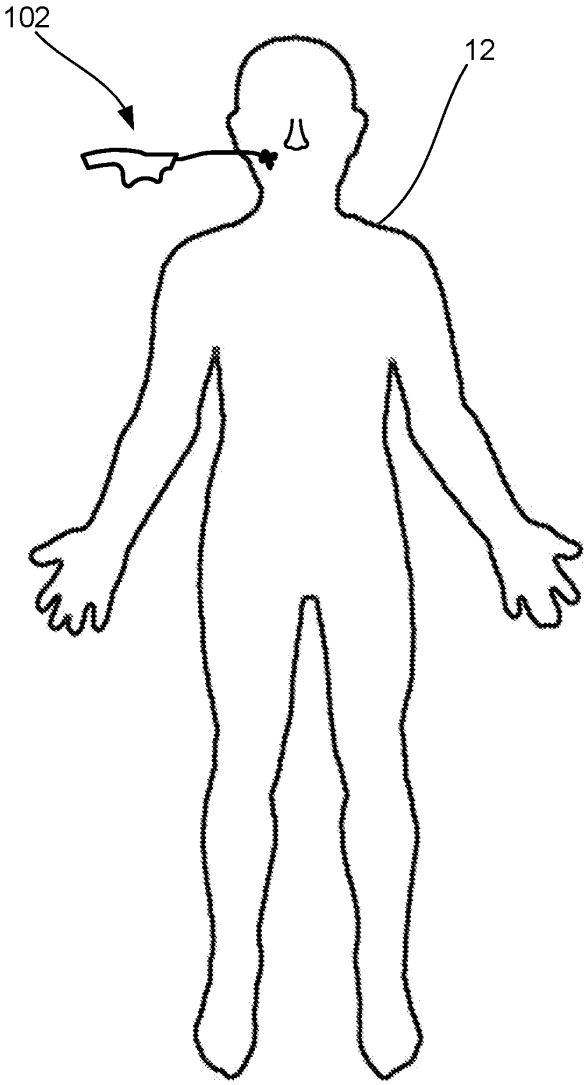
102
12

FIG. 1B

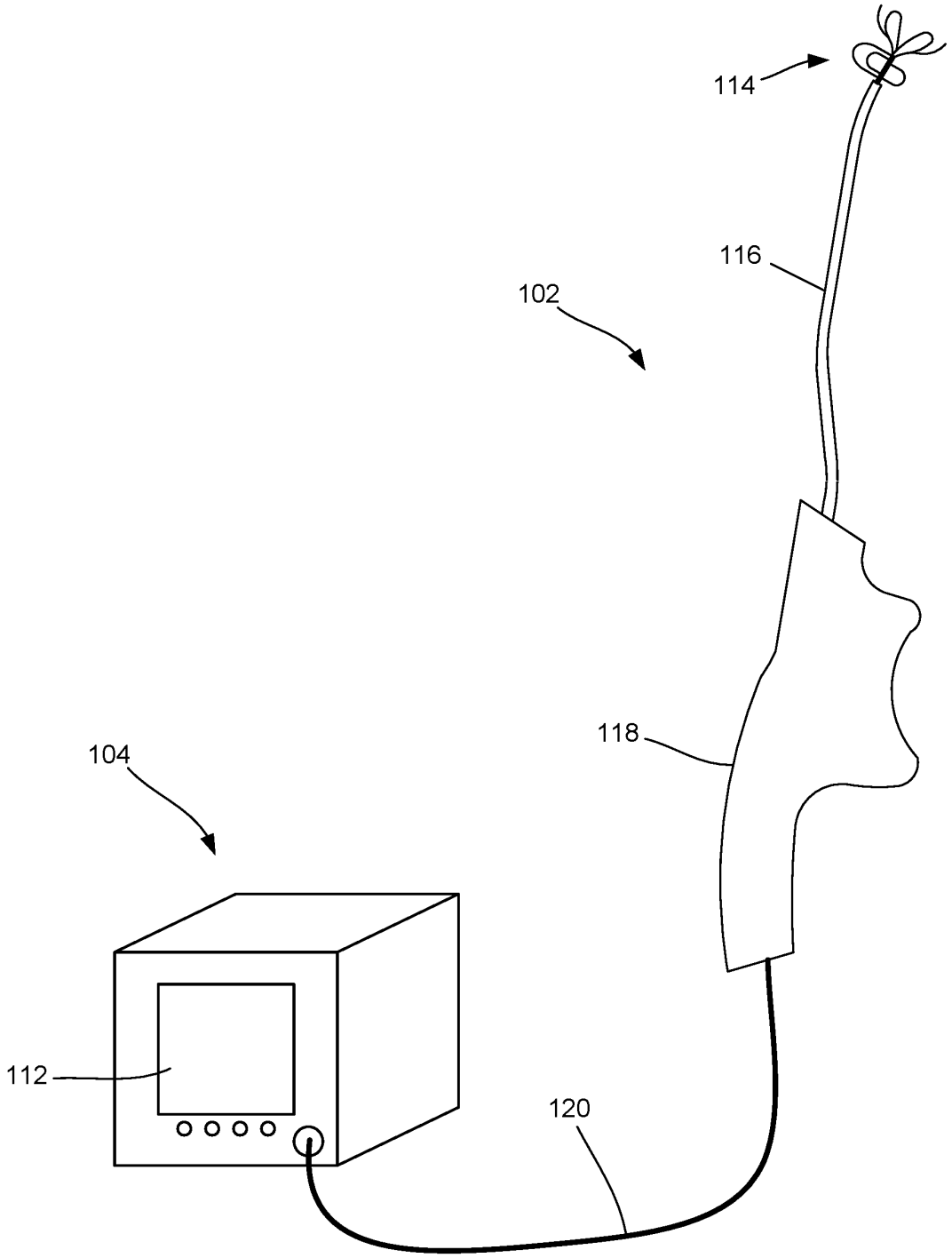

FIG. 2

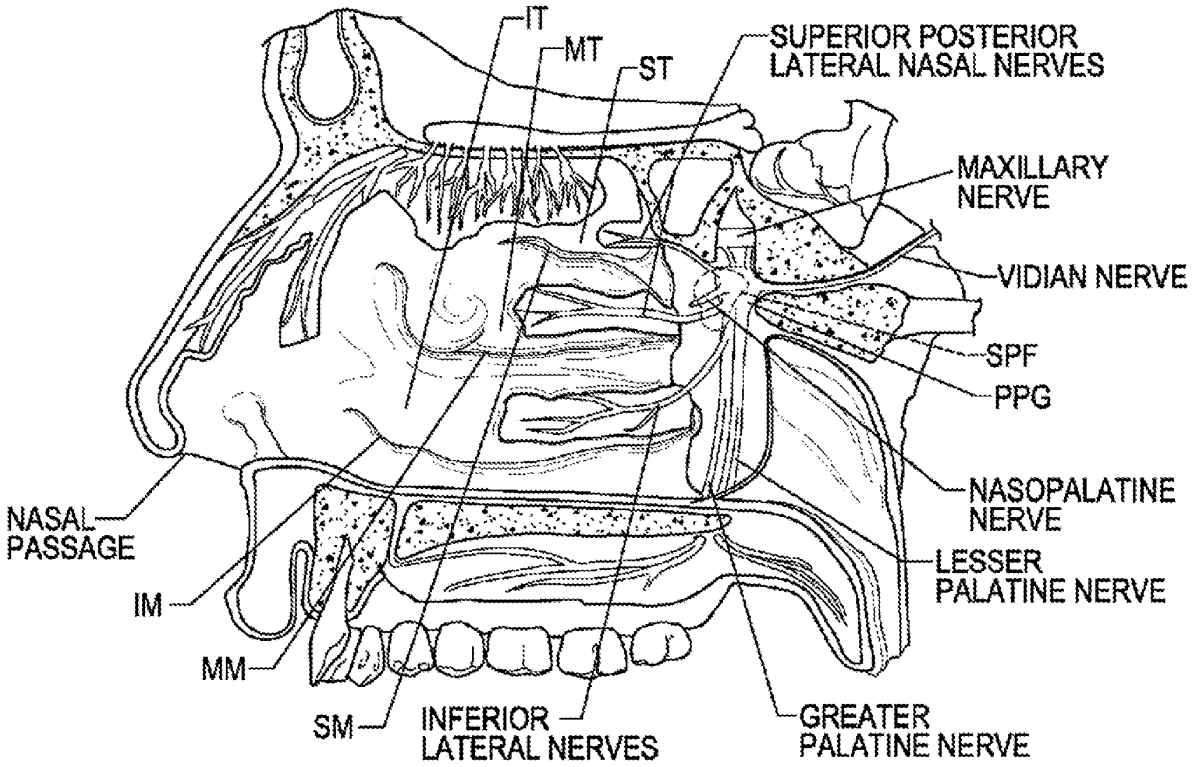
IT
MT
ST
SUPERIOR POSTERIOR
LATERAL NASAL NERVES
MAXILLARY
NERVE
VIDIAN NERVE
SPF
PPG
NASOPALATINE
NERVE
LESSER
PALATINE NERVE
NASAL
PASSAGE
IM
MM
SM
INFERIOR
LATERAL NERVES
GREATER
PALATINE NERVE

FIG. 3A

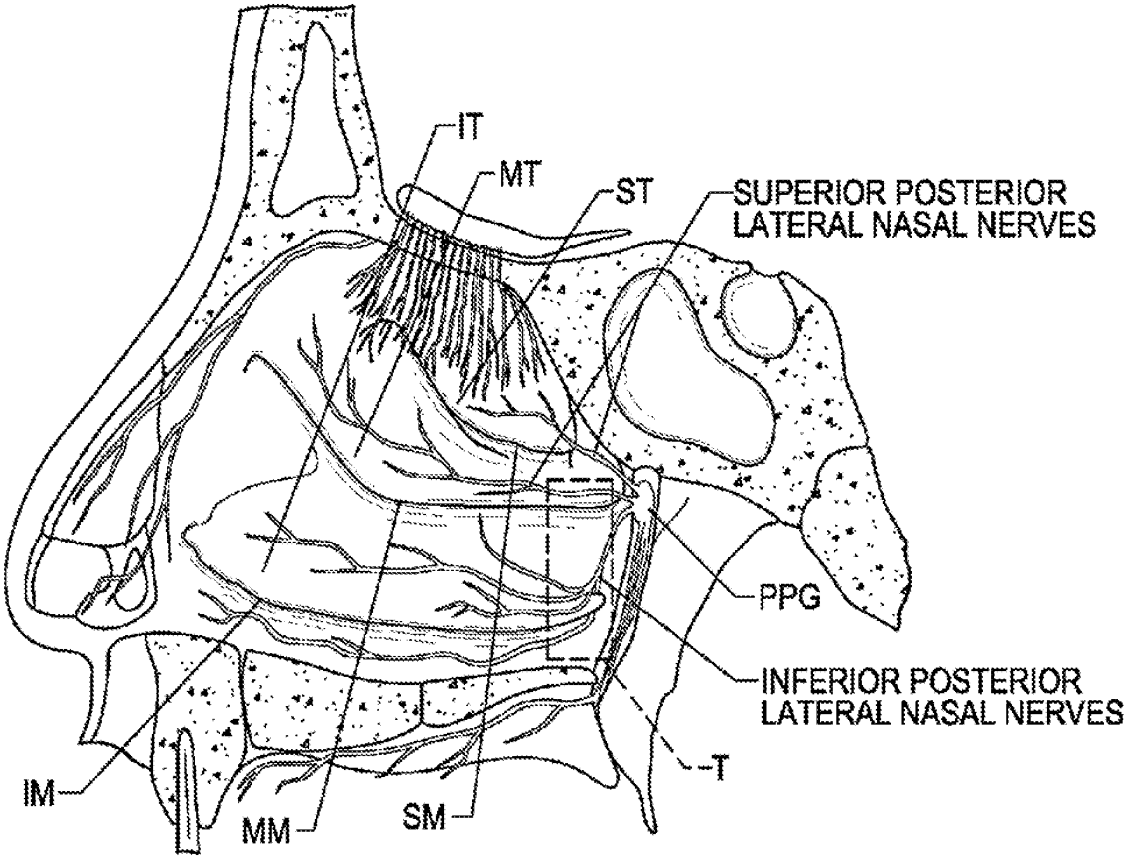
IT
MT
ST
SUPERIOR POSTERIOR
LATERAL NASAL NERVES
PPG
INFERIOR POSTERIOR
LATERAL NASAL NERVES
T
IM
MM
SM

FIG. 3B

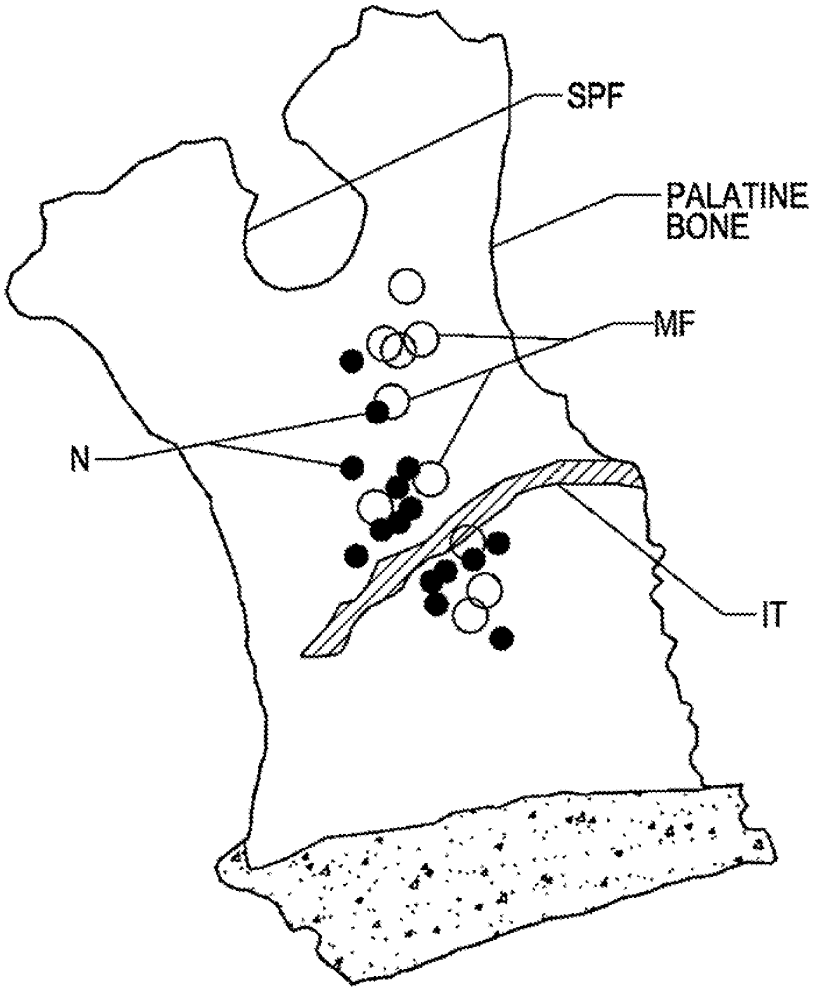

FIG. 3C

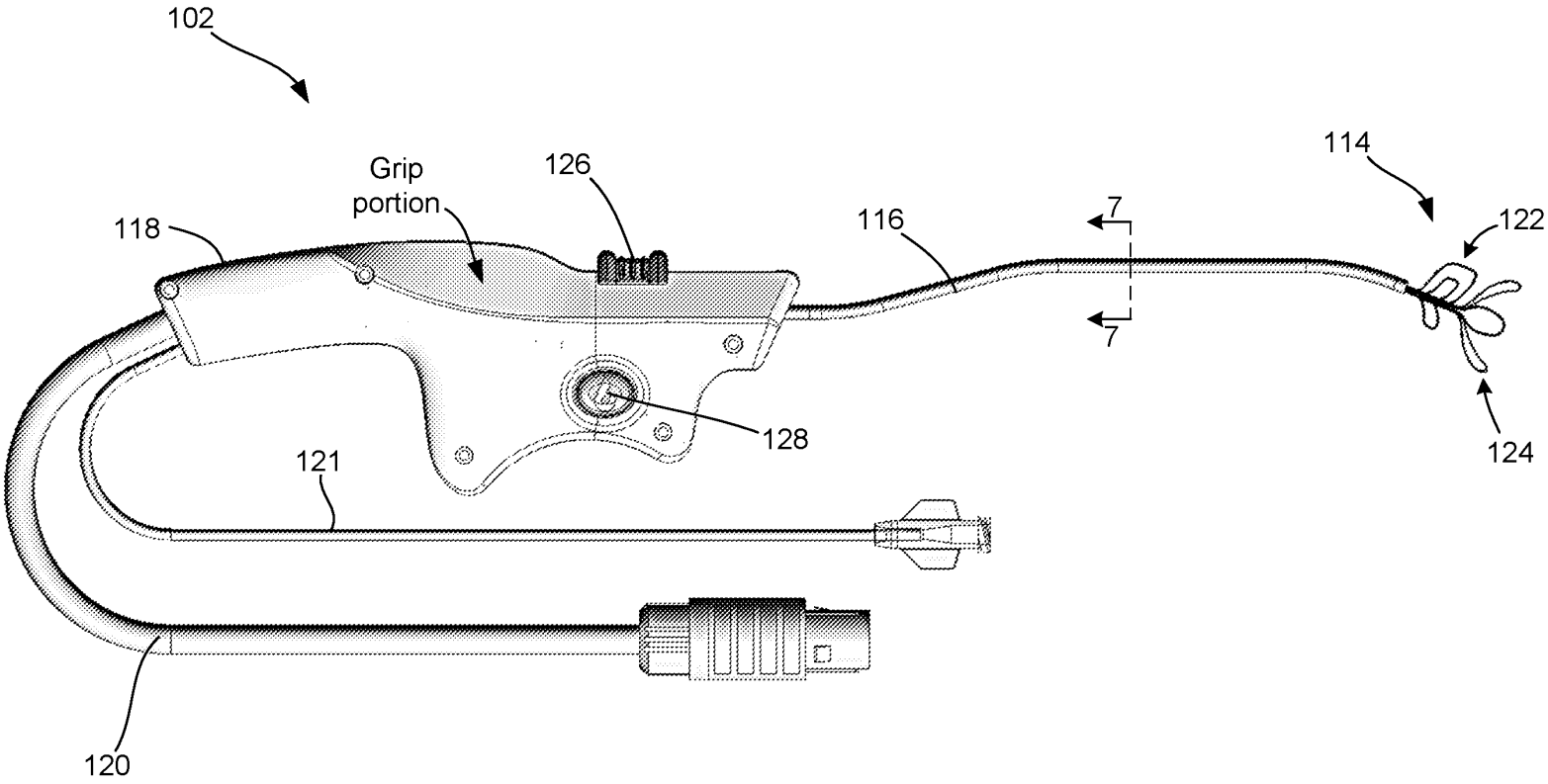

FIG. 4

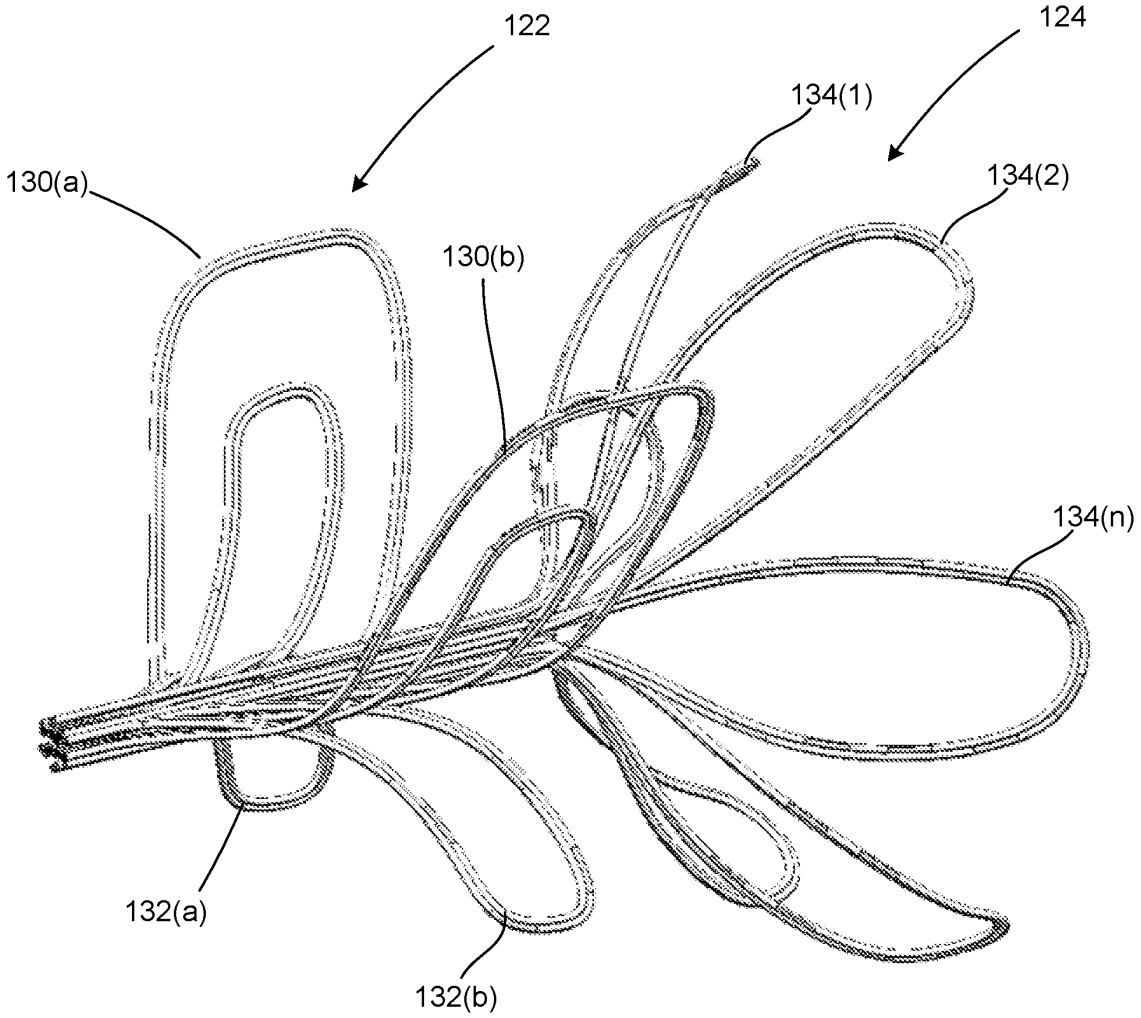

FIG. 5A

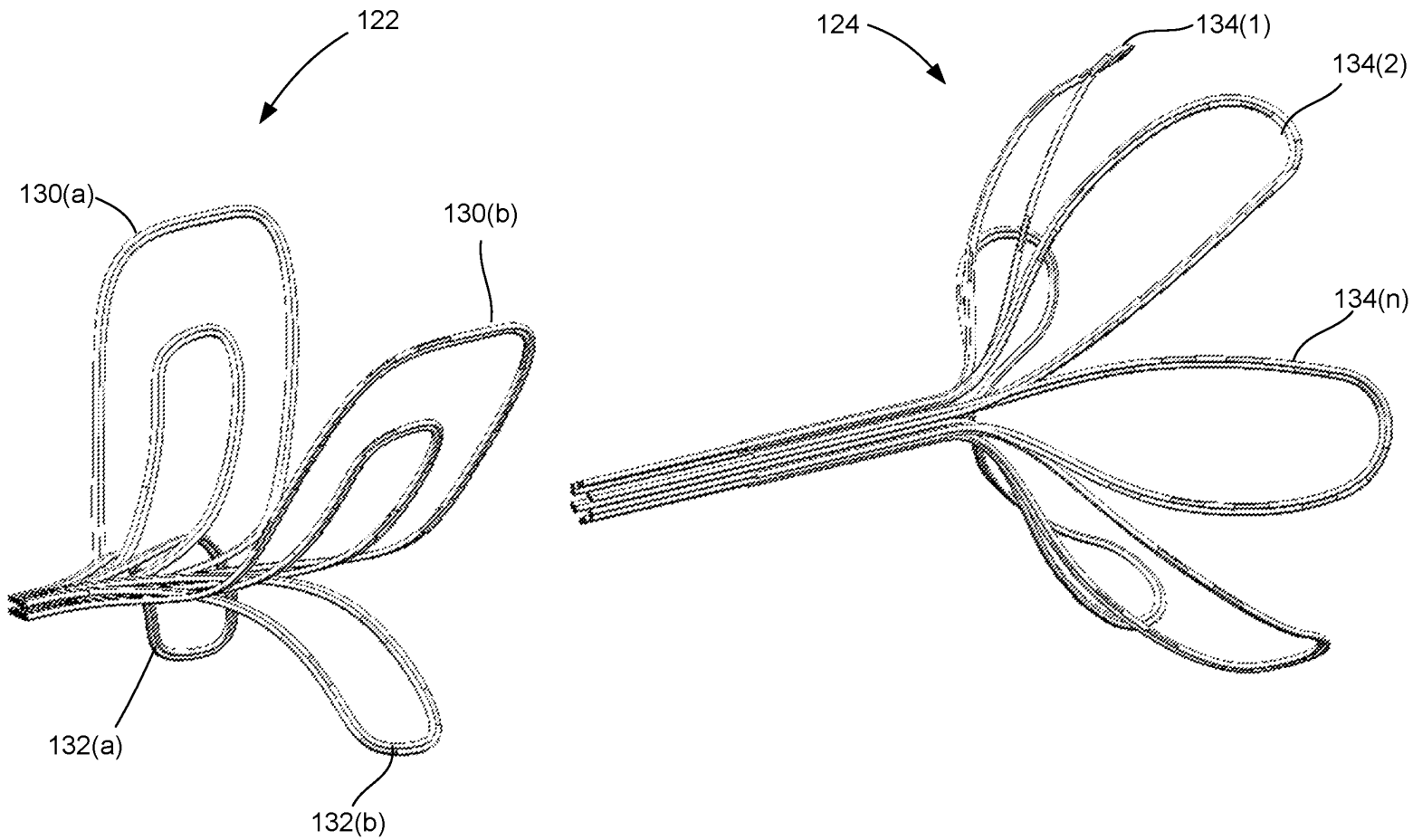

FIG. 5B

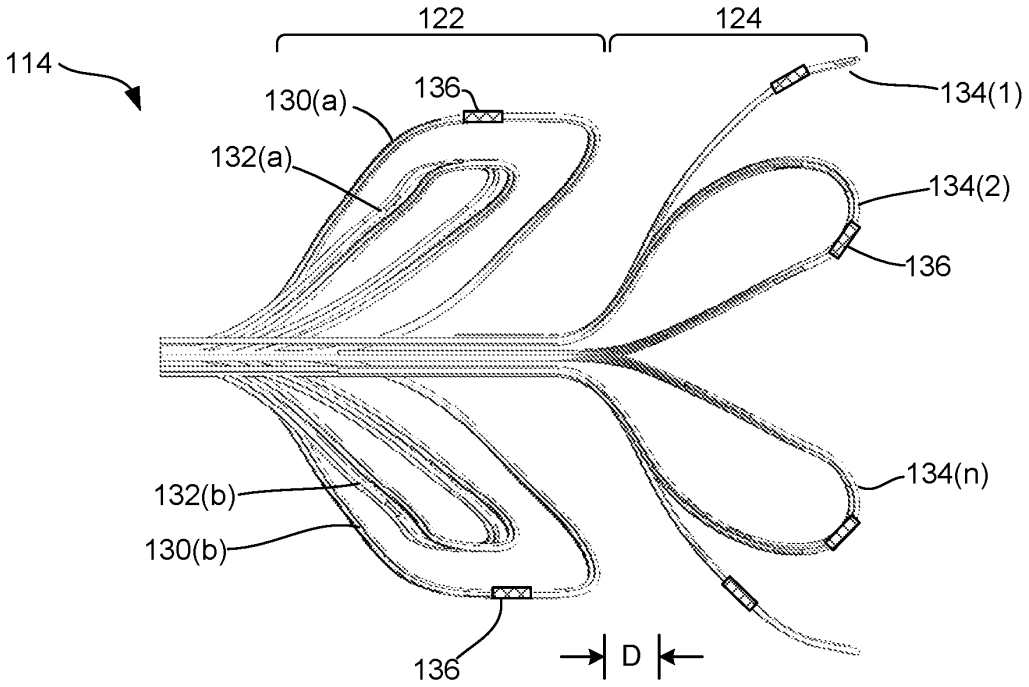
122
124
114
130(a)
136
134(1)
132(a)
134(2)
136
134(n)
132(b)
130(b)
136
D

FIG. 5C

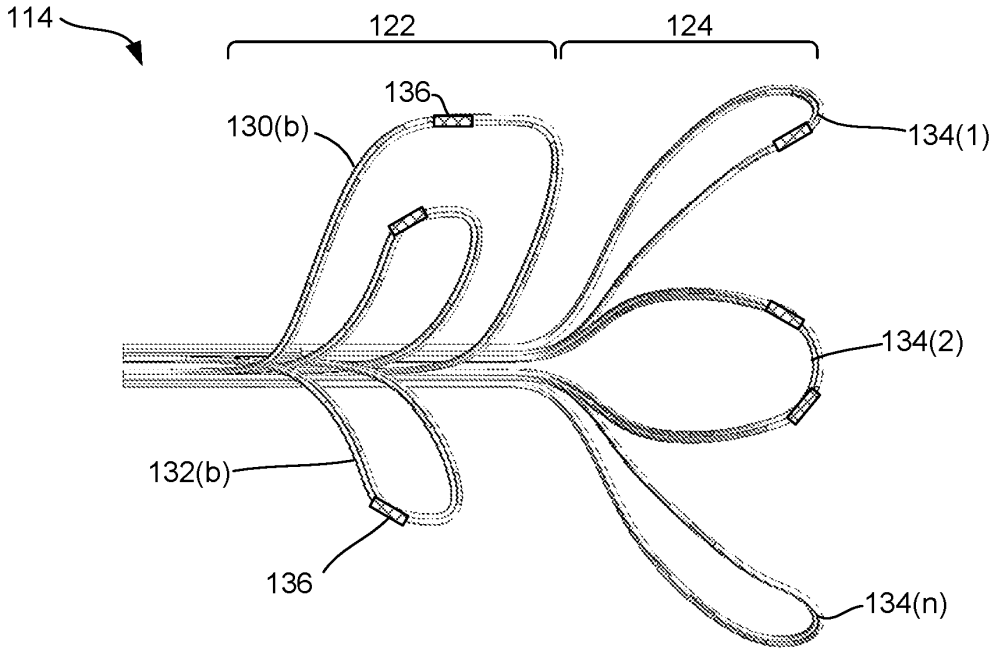
114
122
124
136
130(b)
134(1)
134(2)
132(b)
136
134(n)

FIG. 5D

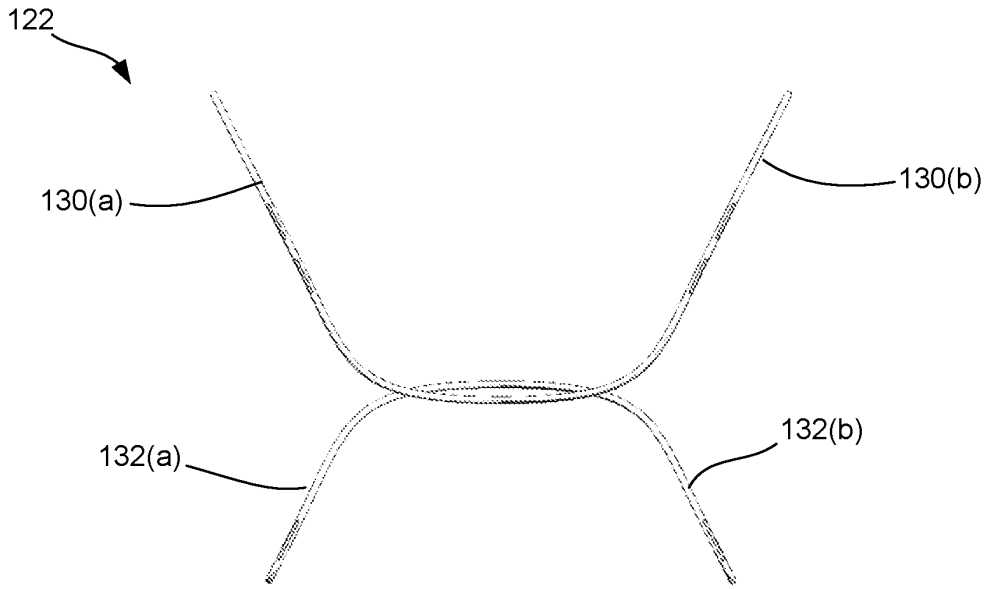

FIG. 5E

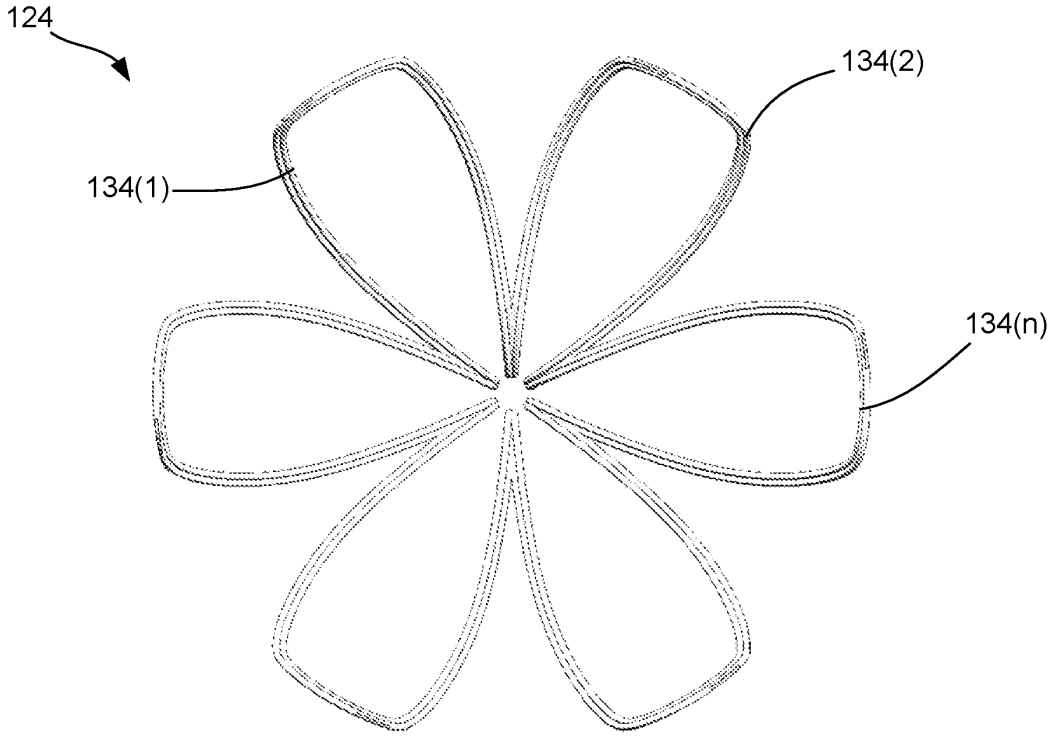

FIG. 5F

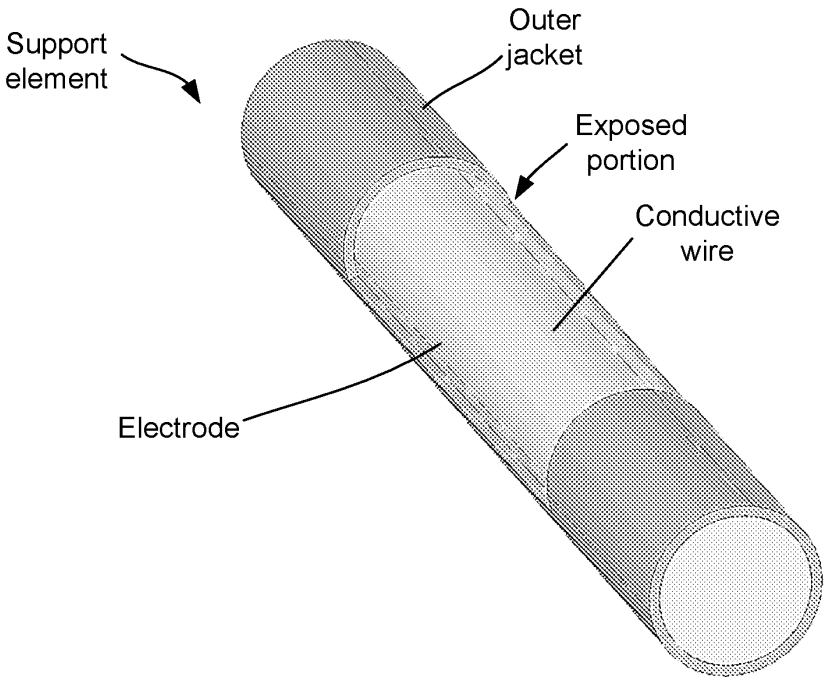
Support element
Outer jacket
Exposed portion
Conductive wire
Electrode

FIG. 6

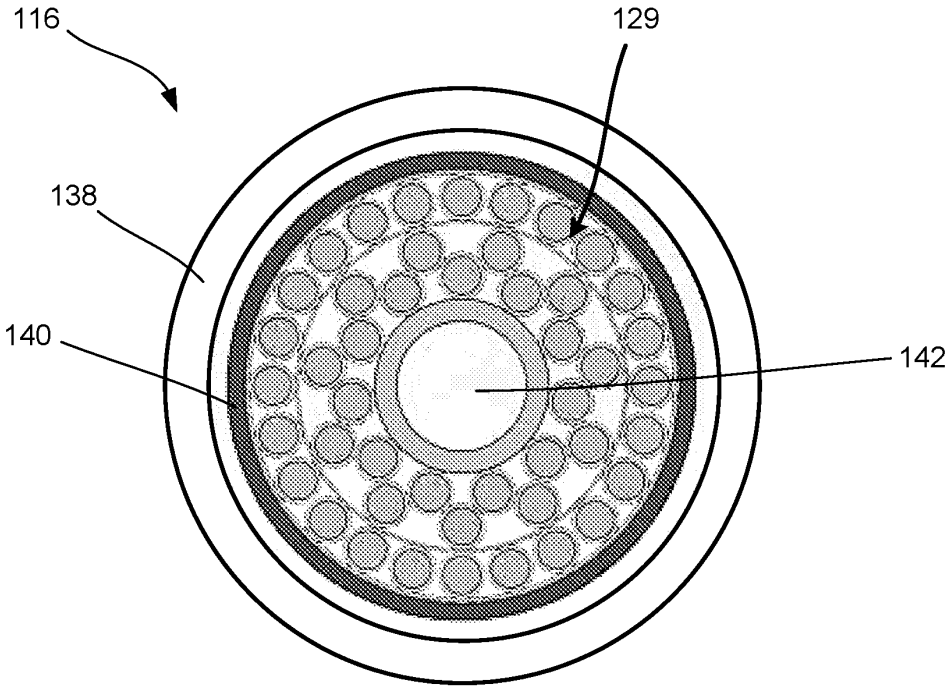
116
129
138
140
142

FIG. 7

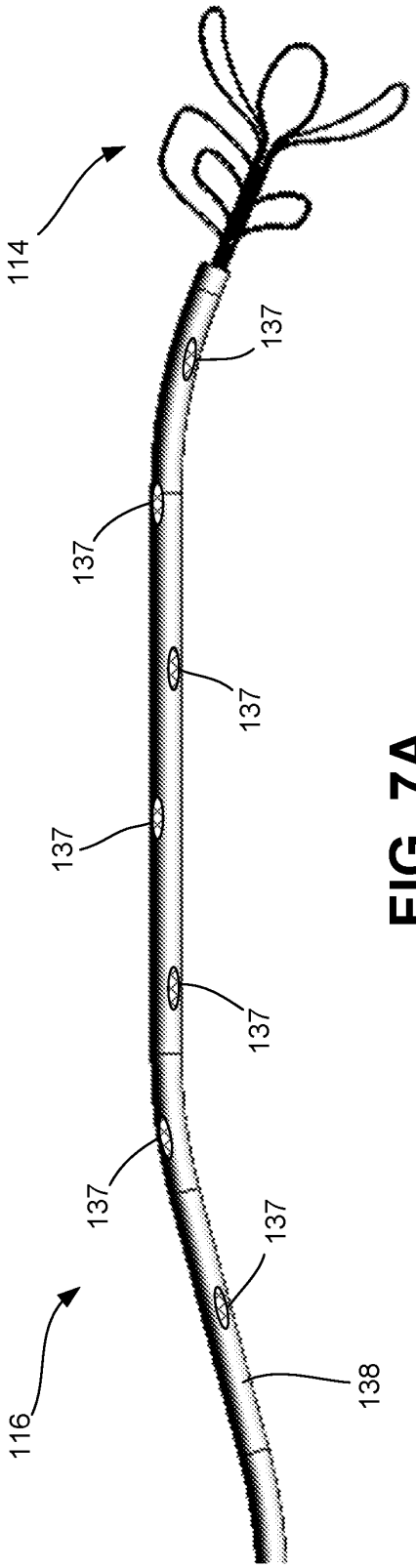

FIG. 7A

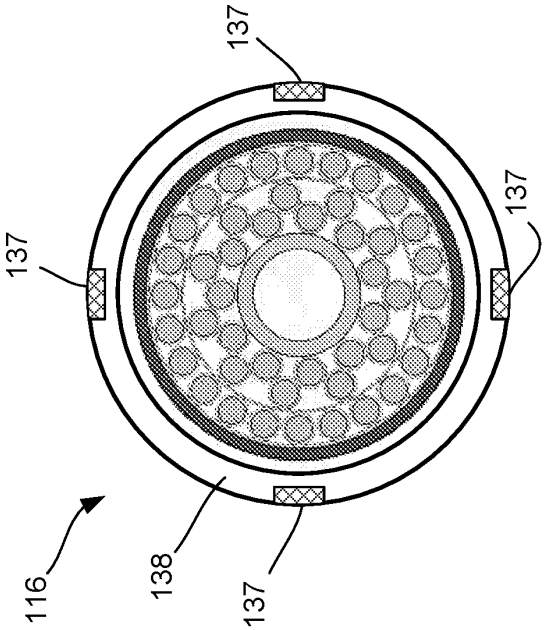

FIG. 7B

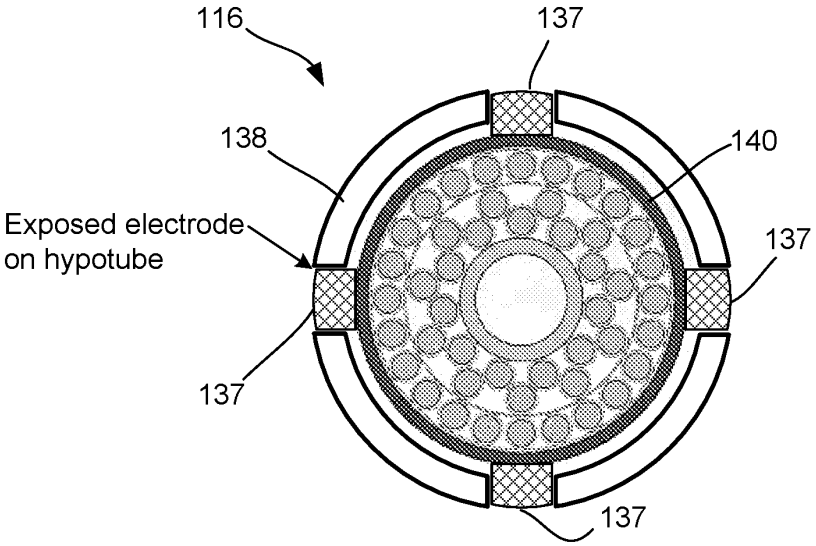
116
137
138
140
Exposed electrode
on hypotube
137
137
137

FIG. 7C

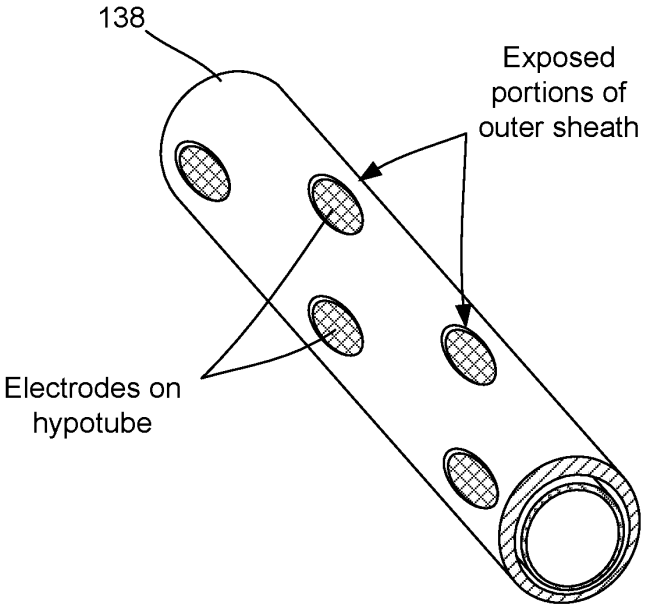
138
Exposed
portions of
outer sheath
Electrodes on
hypotube

FIG. 7D

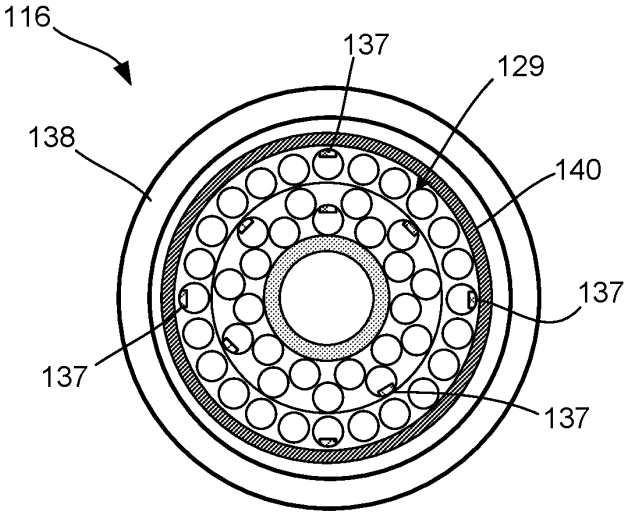

FIG. 7E

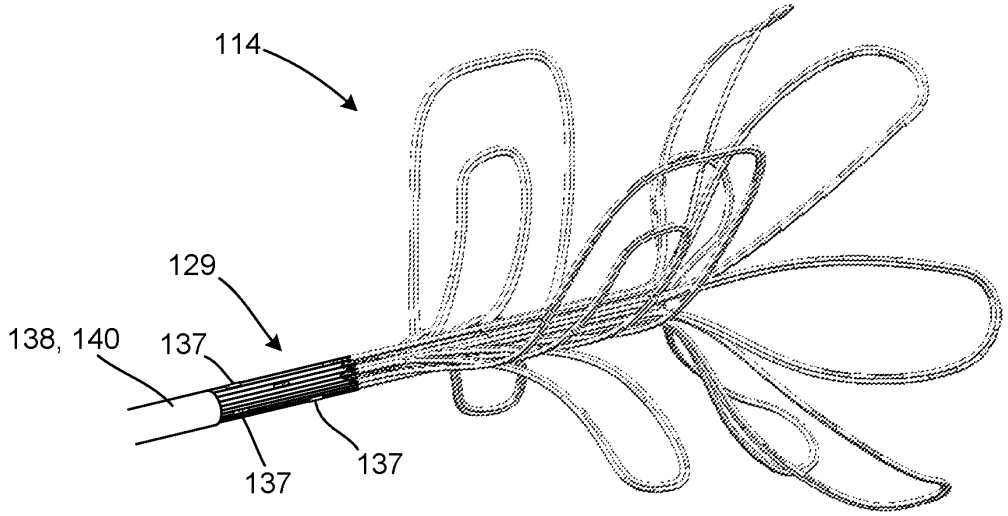

FIG. 7F

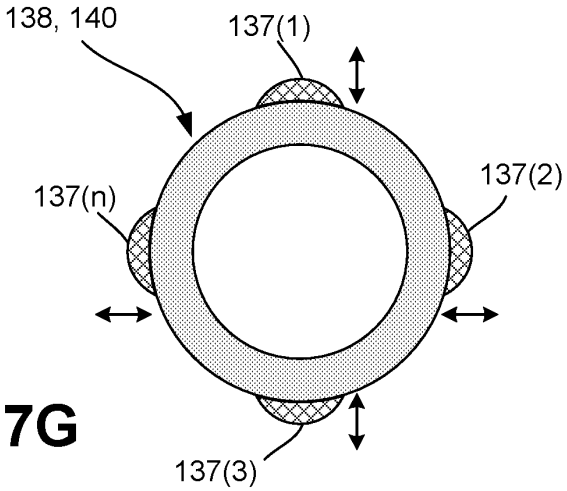

FIG. 7G

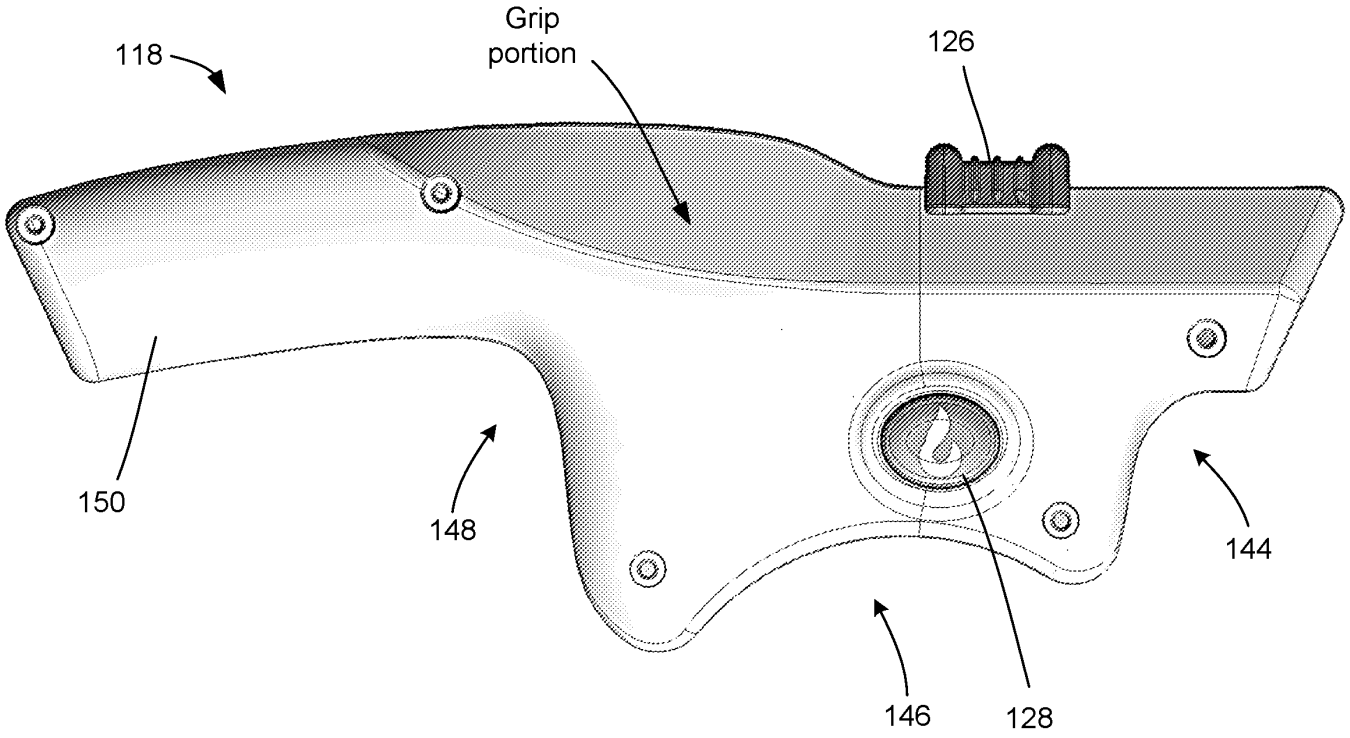

FIG. 8

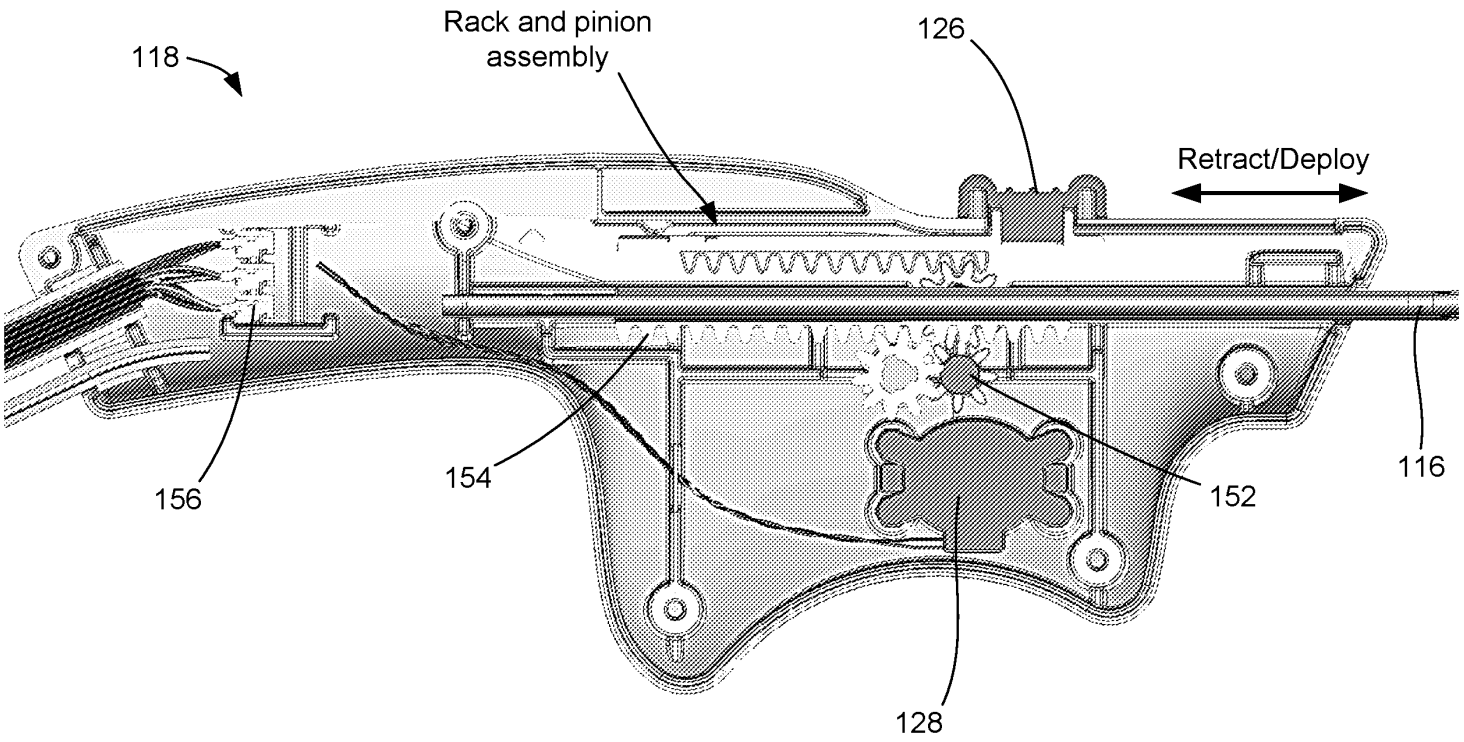
118
Rack and pinion assembly
126
Retract/Deploy
156
154
152
116
128

FIG. 9

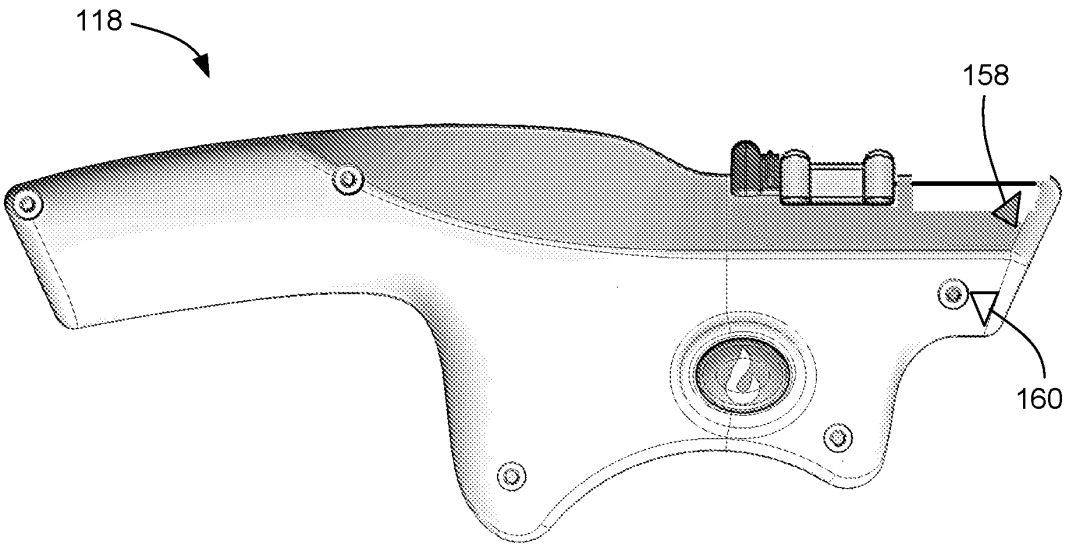

FIG. 10

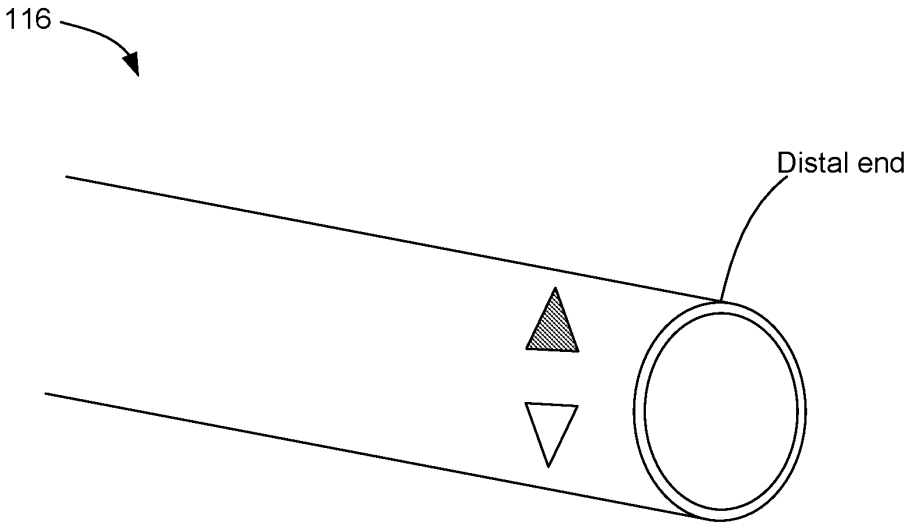

FIG. 11

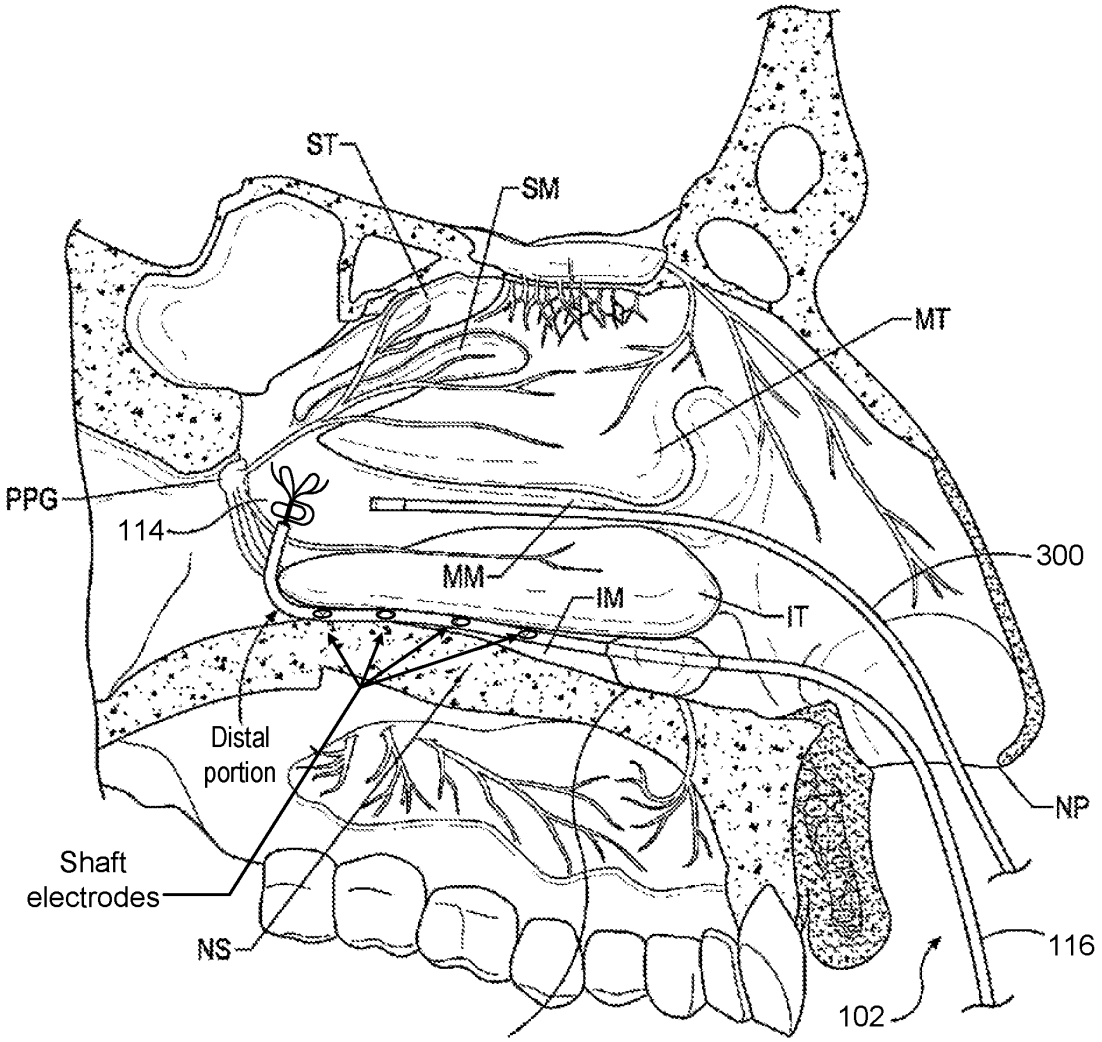
ST
SM
MT
PPG
114
300
MM
IM
IT
Distal
portion
NP
Shaft
electrodes
NS
116
102

FIG. 12

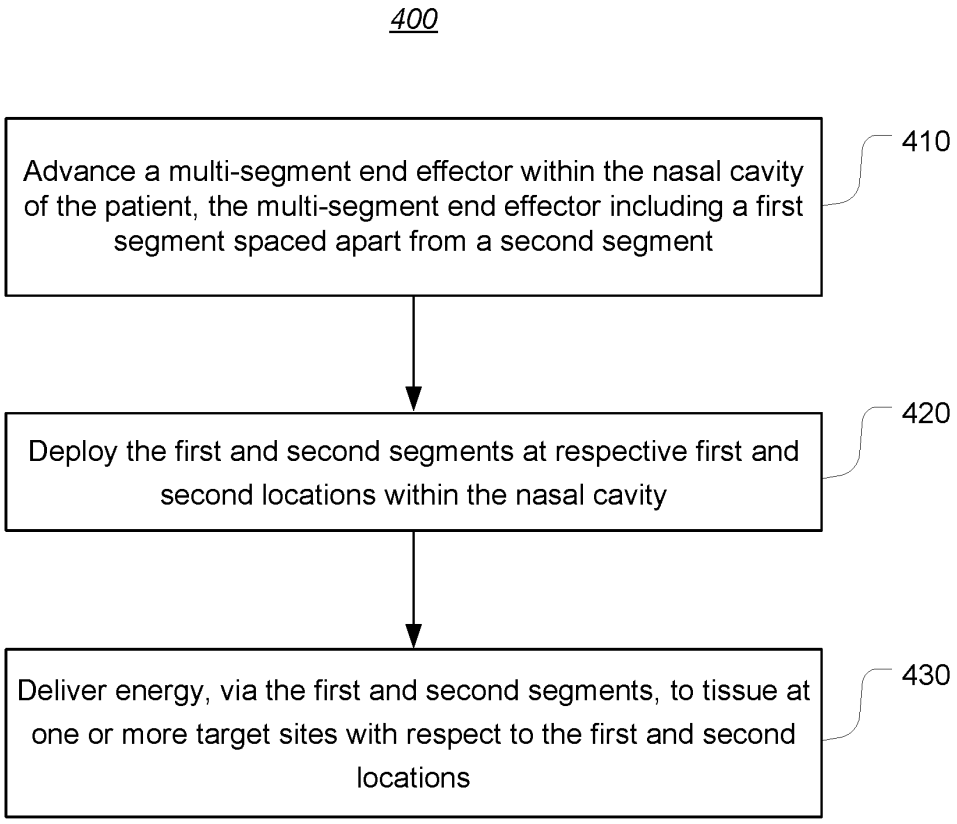
400
Advance a multi-segment end effector within the nasal cavity of the patient, the multi-segment end effector including a first segment spaced apart from a second segment
410
Deploy the first and second segments at respective first and second locations within the nasal cavity
420
Deliver energy, via the first and second segments, to tissue at one or more target sites with respect to the first and second locations
430

FIG. 13

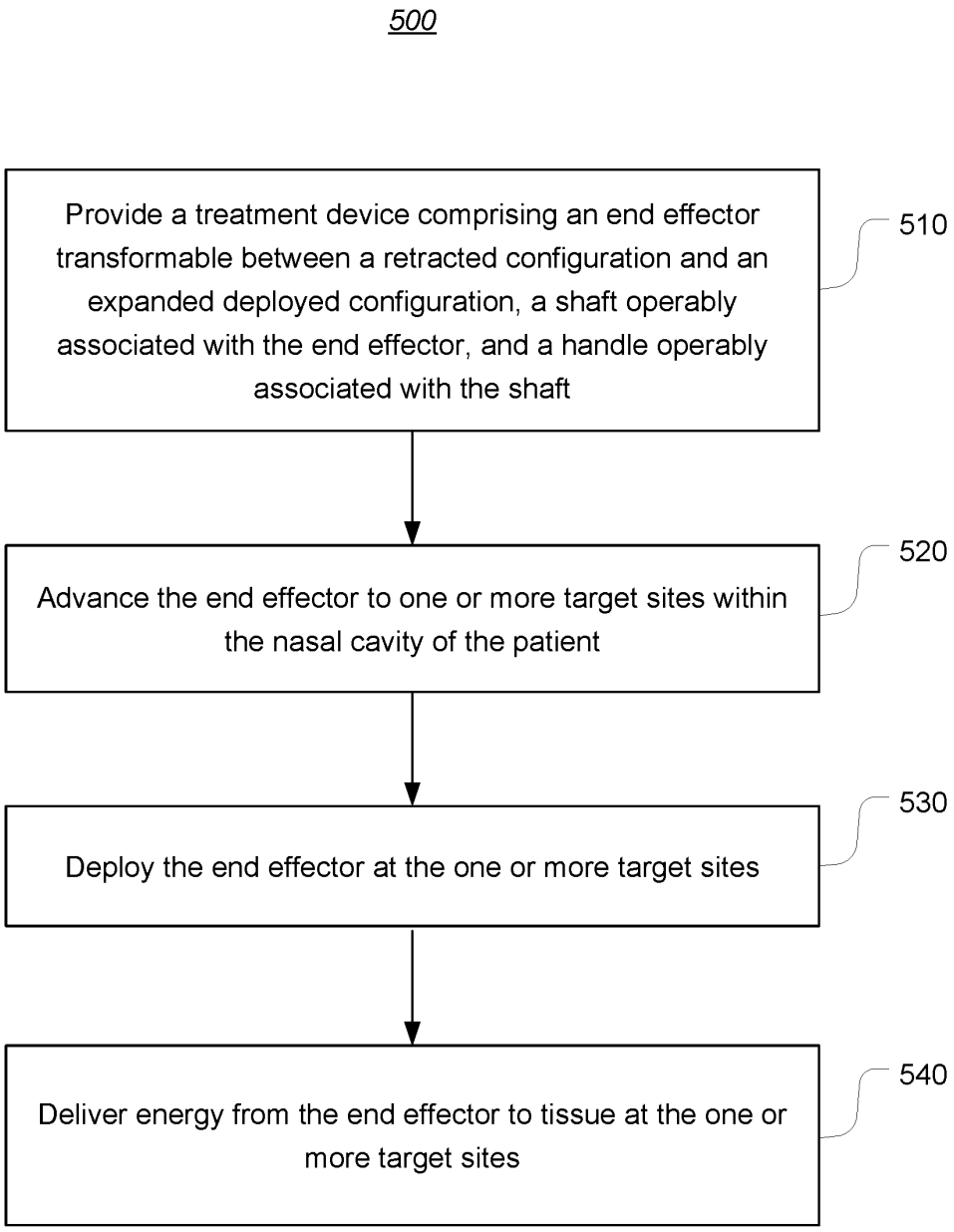
500
Provide a treatment device comprising an end effector transformable between a retracted configuration and an expanded deployed configuration, a shaft operably associated with the end effector, and a handle operably associated with the shaft
510
Advance the end effector to one or more target sites within the nasal cavity of the patient
520
Deploy the end effector at the one or more target sites
530
Deliver energy from the end effector to tissue at the one or more target sites
540

FIG. 14

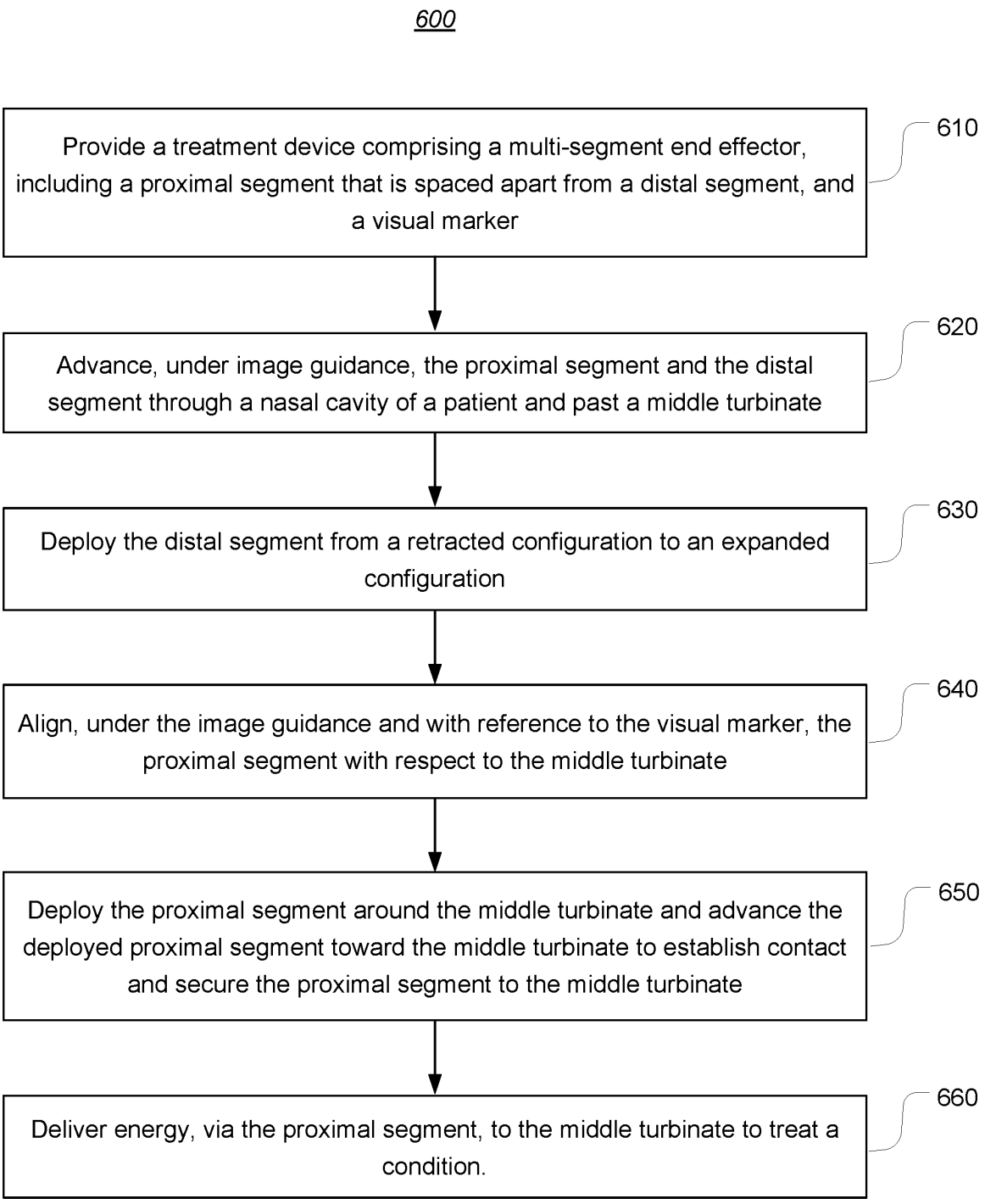
600
Provide a treatment device comprising a multi-segment end effector, including a proximal segment that is spaced apart from a distal segment, and a visual marker
610
Advance, under image guidance, the proximal segment and the distal segment through a nasal cavity of a patient and past a middle turbinate
620
Deploy the distal segment from a retracted configuration to an expanded configuration
630
Align, under the image guidance and with reference to the visual marker, the proximal segment with respect to the middle turbinate
640
Deploy the proximal segment around the middle turbinate and advance the deployed proximal segment toward the middle turbinate to establish contact and secure the proximal segment to the middle turbinate
650
Deliver energy, via the proximal segment, to the middle turbinate to treat a condition.
660

FIG. 15

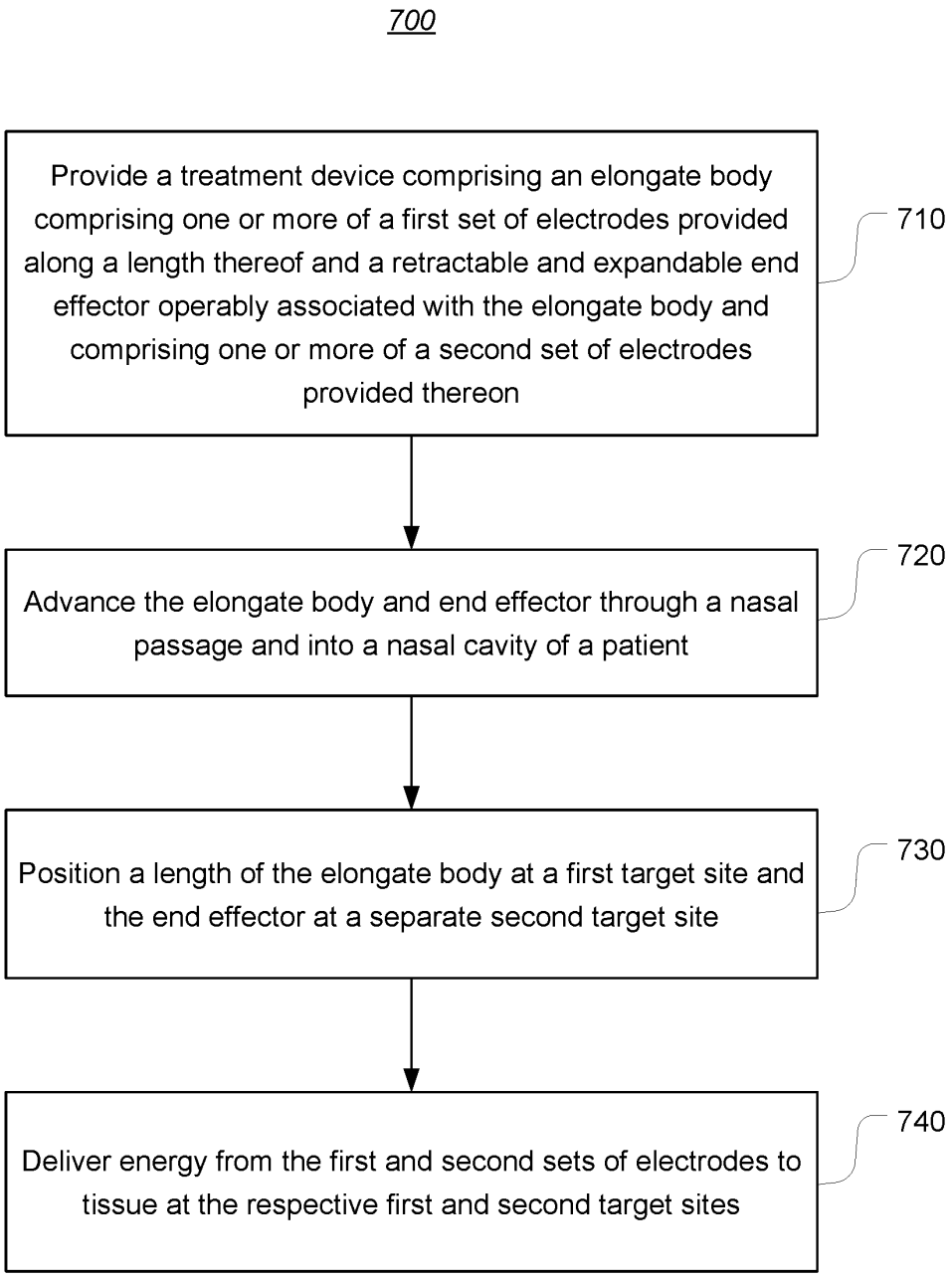
700
Provide a treatment device comprising an elongate body comprising one or more of a first set of electrodes provided along a length thereof and a retractable and expandable end effector operably associated with the elongate body and comprising one or more of a second set of electrodes provided thereon
710
Advance the elongate body and end effector through a nasal passage and into a nasal cavity of a patient
720
Position a length of the elongate body at a first target site and the end effector at a separate second target site
730
Deliver energy from the first and second sets of electrodes to tissue at the respective first and second target sites
740

FIG. 16

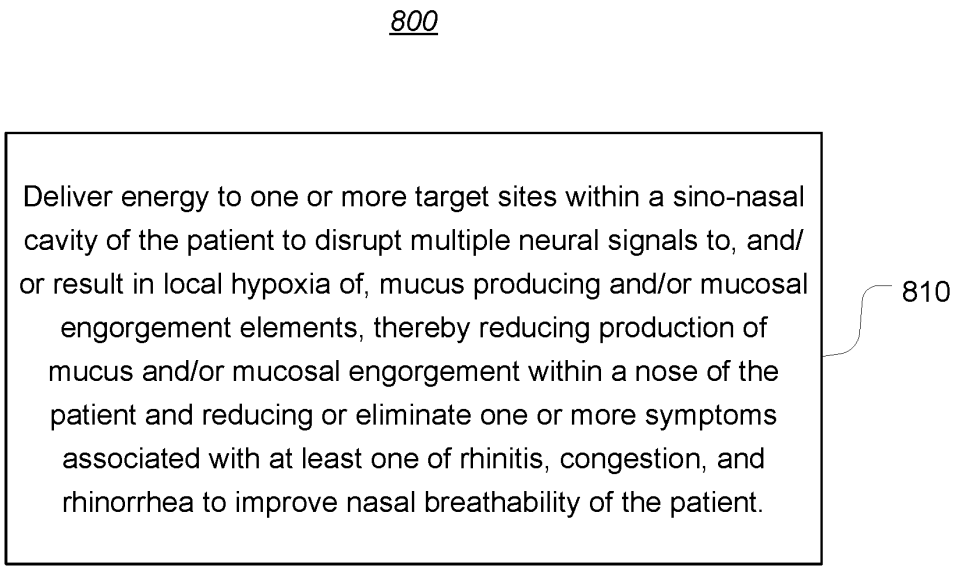
800
Deliver energy to one or more target sites within a sino-nasal cavity of the patient to disrupt multiple neural signals to, and/or result in local hypoxia of, mucus producing and/or mucosal engorgement elements, thereby reducing production of mucus and/or mucosal engorgement within a nose of the patient and reducing or eliminate one or more symptoms associated with at least one of rhinitis, congestion, and rhinorrhea to improve nasal breathability of the patient.
810

FIG. 17

Doc Code: TRACK1.REQ
Document Description: TrackOne Request

PTO/AIA/424 (11-23)

CERTIFICATION AND REQUEST FOR PRIORITIZED EXAMINATION UNDER 37 CFR 1.102(e) (Page 1 of 1)

First Named Inventor:	David Townley	Nonprovisional Application Number (if known):	Not Yet Assigned
Title of Invention:	SYSTEMS AND METHODS FOR THERAPEUTIC NASAL TREATMENT USING HANDHELD DEVICE		

APPLICANT HEREBY CERTIFIES THE FOLLOWING AND REQUESTS PRIORITIZED EXAMINATION FOR THE ABOVE-IDENTIFIED APPLICATION.

1. The processing fee set forth in 37 CFR 1.17(i)(1) and the prioritized examination fee set forth in 37 CFR 1.17(c) have been filed with the request. The publication fee requirement is met because that fee, set forth in 37 CFR 1.18(d), is currently $0. The basic filing fee, search fee, and examination fee are filed with the request or have been already been paid. I understand that any required excess claims fees or application size fee must be paid for the application.
2. I understand that the application may not contain, or be amended to contain, more than four independent claims, more than thirty total claims, or any multiple dependent claims, and that any request for an extension of time will cause an outstanding Track I request to be dismissed.
3. The applicable box is checked below:

I. [x] **Original Application (Track One) - Prioritized Examination under § 1.102(e)(1)**

i. (a) The application is an original nonprovisional utility application filed under 35 U.S.C. 111(a). This certification and request is being filed with the utility application via USPTO patent electronic filing system.

---OR---

(b) The application is an original nonprovisional plant application filed under 35 U.S.C. 111(a). This certification and request is being filed with the plant application in paper.

ii. An executed inventor's oath or declaration under 37 CFR 1.63 or 37 CFR 1.64 for each inventor, **or** the application data sheet meeting the conditions specified in 37 CFR 1.53(f)(3)(i) is filed with the application.

II. [ ] **Request for Continued Examination - Prioritized Examination under § 1.102(e)(2)**

i. A request for continued examination has been filed with, or prior to, this form.
ii. If the application is a utility application, this certification and request is being filed via USPTO patent electronic filing system.
iii. The application is an original nonprovisional utility application filed under 35 U.S.C. 111(a), or is a national stage entry under 35 U.S.C. 371.
iv. This certification and request is being filed prior to the mailing of a first Office action responsive to the request for continued examination.
v. No prior request for continued examination has been granted prioritized examination status under 37 CFR 1.102(e)(2).

Signature	/Adam M. Schoen/	Date	April 26, 2024
Name (Print/Typed)	Adam M. Schoen	Practitioner Registration Number	58,576

***Note**: This form must be signed in accordance with 37 CFR 1.33. See 37 CFR 1.4(d) for signature requirements and certifications. Submit multiple forms if more than one signature is required. **

[ ] *Total of 1 forms are submitted.

65346552 v1-WorkSiteUS-035242/0160

PTO/AIA/14 (01-22)
Approved for use through 05/31/2024. OMB 0651-0032
U.S. Patent and Trademark Office; U.S. DEPARTMENT OF COMMERCE
Under the Paperwork Reduction Act of 1995, no persons are required to respond to a collection of information unless it contains a valid OMB control number.

Application Data Sheet 37 CFR 1.76	Attorney Docket Number	NEURE-008/08US 35242/160
	Application Number	
Title of Invention	SYSTEMS AND METHODS FOR THERAPEUTIC NASAL TREATMENT USING HANDHELD DEVICE	

The application data sheet is part of the provisional or nonprovisional application for which it is being submitted. The following form contains the bibliographic data arranged in a format specified by the United States Patent and Trademark Office as outlined in 37 CFR 1.76.
This document may be completed electronically and submitted to the Office in electronic format using the Electronic Filing System (EFS) or the document may be printed and included in a paper filed application.

Secrecy Order 37 CFR 5.2:

☐ Portions or all of the application associated with this Application Data Sheet may fall under a Secrecy Order pursuant to 37 CFR 5.2 (Paper filers only. Applications that fall under Secrecy Order may not be filed electronically.)

Inventor Information:

Inventor 1 Remove

Legal Name

Prefix	Given Name	Middle Name	Family Name	Suffix
	David		Townley	

Residence Information (Select One) ○ US Residency ◉ Non US Residency ○ Active US Military Service

City	County Clare	Country of Residence i	IE

Mailing Address of Inventor:

Address 1	Latoon North, Newmarket-on-Fergus		
Address 2			
City	County Clare	**State/Province**	
Postal Code		**Country** i	IE

All Inventors Must Be Listed - Additional Inventor Information blocks may be generated within this form by selecting the **Add** button. Add

Correspondence Information:

Enter either Customer Number or complete the Correspondence Information section below.
For further information see 37 CFR 1.33(a).

☐ **An Address is being provided for the correspondence Information of this application.**

Customer Number	21710		
Email Address	ip@brownrudnick.com	Add Email	Remove Email

Application Information:

Title of the Invention	SYSTEMS AND METHODS FOR THERAPEUTIC NASAL TREATMENT USING HANDHELD DEVICE		
Attorney Docket Number	NEURE-008/08US 35242/160	**Small Entity Status Claimed**	☒
Application Type	Nonprovisional		
Subject Matter	Utility		
Total Number of Drawing Sheets (if any)	23	**Suggested Figure for Publication (if any)**	1A

Under the Paperwork Reduction Act of 1995, no persons are required to respond to a collection of information unless it contains a valid OMB control number.

Application Data Sheet 37 CFR 1.76	Attorney Docket Number	NEURE-008/08US 35242/160
	Application Number	
Title of Invention	SYSTEMS AND METHODS FOR THERAPEUTIC NASAL TREATMENT USING HANDHELD DEVICE	

Filing By Reference:

Only complete this section when filing an application by reference under 35 U.S.C. 111(c) and 37 CFR 1.57(a). Do not complete this section if application papers including a specification and any drawings are being filed. Any domestic benefit or foreign priority information must be provided in the appropriate section(s) below (i.e., "Domestic Benefit/National Stage Information" and "Foreign Priority Information").

For the purposes of a filing date under 37 CFR 1.53(b), the description and any drawings of the present application are replaced by this reference to the previously filed application, subject to conditions and requirements of 37 CFR 1.57(a).

Application number of the previously filed application	Filing date (YYYY-MM-DD)	Intellectual Property Authority or Country

Publication Information:

☐ Request Early Publication (Fee required at time of Request 37 CFR 1.219)

☐ **Request Not to Publish.** I hereby request that the attached application not be published under 35 U.S.C. 122(b) and certify that the invention disclosed in the attached application **has not and will not** be the subject of an application filed in another country, or under a multilateral international agreement, that requires publication at eighteen months after filing.

Representative Information:

Representative information should be provided for all practitioners having a power of attorney in the application. Providing this information in the Application Data Sheet does not constitute a power of attorney in the application (see 37 CFR 1.32).
Either enter Customer Number or complete the Representative Name section below. If both sections are completed the customer Number will be used for the Representative Information during processing.

Please Select One:	◉ Customer Number	○ US Patent Practitioner	○ Limited Recognition (37 CFR 11.9)
Customer Number	21710		

Domestic Benefit/National Stage Information:

This section allows for the applicant to either claim benefit under 35 U.S.C. 119(e), 120, 121, 365(c), or 386(c) or indicate National Stage entry from a PCT application. Providing benefit claim information in the Application Data Sheet constitutes the specific reference required by 35 U.S.C. 119(e) or 120, and 37 CFR 1.78.
When referring to the current application, please leave the "Application Number" field blank.

Prior Application Status	Pending		Remove
Application Number	Continuity Type	Prior Application Number	Filing or 371(c) Date (YYYY-MM-DD)
	Continuation of	18/411476	2024-01-12

Application Data Sheet 37 CFR 1.76	Attorney Docket Number	NEURE-008/08US 35242/160
	Application Number	
Title of Invention	SYSTEMS AND METHODS FOR THERAPEUTIC NASAL TREATMENT USING HANDHELD DEVICE	

Prior Application Status	Patented				Remove
Application Number	Continuity Type	Prior Application Number	Filing Date (YYYY-MM-DD)	Patent Number	Issue Date (YYYY-MM-DD)
18/411476	Continuation of	17/225560	2021-04-08	11883091	2024-01-30

Prior Application Status	Expired		Remove
Application Number	Continuity Type	Prior Application Number	Filing or 371(c) Date (YYYY-MM-DD)
17/225560	Claims benefit of provisional	63/007584	2020-04-09

Additional Domestic Benefit/National Stage Data may be generated within this form by selecting the **Add** button. Add

Foreign Priority Information:

This section allows for the applicant to claim priority to a foreign application. Providing this information in the application data sheet constitutes the claim for priority as required by 35 U.S.C. 119(b) and 37 CFR 1.55. When priority is claimed to a foreign application that is eligible for retrieval under the priority document exchange program (PDX)[i] the information will be used by the Office to automatically attempt retrieval pursuant to 37 CFR 1.55(i)(1) and (2). Under the PDX program, applicant bears the ultimate responsibility for ensuring that a copy of the foreign application is received by the Office from the participating foreign intellectual property office, or a certified copy of the foreign priority application is filed, within the time period specified in 37 CFR 1.55(g)(1).

Remove

Application Number	Country[i]	Filing Date (YYYY-MM-DD)	Access Code[i] (if applicable)

Additional Foreign Priority Data may be generated within this form by selecting the **Add** button. Add

Statement under 37 CFR 1.55 or 1.78 for AIA (First Inventor to File) Transition Applications

☐ This application (1) claims priority to or the benefit of an application filed before March 16, 2013 and (2) also contains, or contained at any time, a claim to a claimed invention that has an effective filing date on or after March 16, 2013.
NOTE: By providing this statement under 37 CFR 1.55 or 1.78, this application, with a filing date on or after March 16, 2013, will be examined under the first inventor to file provisions of the AIA.

Application Data Sheet 37 CFR 1.76	Attorney Docket Number	NEURE-008/08US 35242/160
	Application Number	
Title of Invention	SYSTEMS AND METHODS FOR THERAPEUTIC NASAL TREATMENT USING HANDHELD DEVICE	

Authorization or Opt-Out of Authorization to Permit Access:

When this Application Data Sheet is properly signed and filed with the application, applicant has provided written authority to permit a participating foreign intellectual property (IP) office access to the instant application-as-filed (see paragraph A in subsection 1 below) and the European Patent Office (EPO) access to any search results from the instant application (see paragraph B in subsection 1 below).

Should applicant choose not to provide an authorization identified in subsection 1 below, applicant **must opt-out** of the authorization by checking the corresponding box A or B or both in subsection 2 below.

NOTE: This section of the Application Data Sheet is **ONLY** reviewed and processed with the **INITIAL** filing of an application. After the initial filing of an application, an Application Data Sheet cannot be used to provide or rescind authorization for access by a foreign IP office(s). Instead, Form PTO/SB/39 or PTO/SB/69 must be used as appropriate.

1. Authorization to Permit Access by a Foreign Intellectual Property Office(s)

A. Priority Document Exchange (PDX) - Unless box A in subsection 2 (opt-out of authorization) is checked, the undersigned hereby **grants the USPTO authority** to provide the European Patent Office (EPO), the Japan Patent Office (JPO), the Korean Intellectual Property Office (KIPO), the State Intellectual Property Office of the People's Republic of China (SIPO), the World Intellectual Property Organization (WIPO), and any other foreign intellectual property office participating with the USPTO in a bilateral or multilateral priority document exchange agreement in which a foreign application claiming priority to the instant patent application is filed, access to: (1) the instant patent application-as-filed and its related bibliographic data, (2) any foreign or domestic application to which priority or benefit is claimed by the instant application and its related bibliographic data, and (3) the date of filing of this Authorization. See 37 CFR 1.14(h)(1).

B. Search Results from U.S. Application to EPO - Unless box B in subsection 2 (opt-out of authorization) is checked, the undersigned hereby **grants the USPTO authority** to provide the EPO access to the bibliographic data and search results from the instant patent application when a European patent application claiming priority to the instant patent application is filed. See 37 CFR 1.14(h)(2).

The applicant is reminded that the EPO's Rule 141(1) EPC (European Patent Convention) requires applicants to submit a copy of search results from the instant application without delay in a European patent application that claims priority to the instant application.

2. Opt-Out of Authorizations to Permit Access by a Foreign Intellectual Property Office(s)

☐ A. Applicant **DOES NOT** authorize the USPTO to permit a participating foreign IP office access to the instant application-as-filed. If this box is checked, the USPTO will not be providing a participating foreign IP office with any documents and information identified in subsection 1A above.

☐ B. Applicant **DOES NOT** authorize the USPTO to transmit to the EPO any search results from the instant patent application. If this box is checked, the USPTO will not be providing the EPO with search results from the instant application.

NOTE: Once the application has published or is otherwise publicly available, the USPTO may provide access to the application in accordance with 37 CFR 1.14.

Application Data Sheet 37 CFR 1.76	Attorney Docket Number	NEURE-008/08US 35242/160
	Application Number	
Title of Invention	SYSTEMS AND METHODS FOR THERAPEUTIC NASAL TREATMENT USING HANDHELD DEVICE	

Applicant Information:

Providing assignment information in this section does not substitute for compliance with any requirement of part 3 of Title 37 of CFR to have an assignment recorded by the Office.

Applicant 1 Remove

If the applicant is the inventor (or the remaining joint inventor or inventors under 37 CFR 1.45), this section should not be completed. The information to be provided in this section is the name and address of the legal representative who is the applicant under 37 CFR 1.43; or the name and address of the assignee, person to whom the inventor is under an obligation to assign the invention, or person who otherwise shows sufficient proprietary interest in the matter who is the applicant under 37 CFR 1.46. If the applicant is an applicant under 37 CFR 1.46 (assignee, person to whom the inventor is obligated to assign, or person who otherwise shows sufficient proprietary interest) together with one or more joint inventors, then the joint inventor or inventors who are also the applicant should be identified in this section. Clear

- (●) Assignee
- ( ) Legal Representative under 35 U.S.C. 117
- ( ) Joint Inventor
- ( ) Person to whom the inventor is obligated to assign.
- ( ) Person who shows sufficient proprietary interest

If applicant is the legal representative, indicate the authority to file the patent application, the inventor is:

Name of the Deceased or Legally Incapacitated Inventor:

If the Applicant is an Organization check here. [X]

Organization Name	Neurent Medical Limited		
Mailing Address Information For Applicant:			
Address 1	No. 1 Oran Point		
Address 2	Main Street		
City	Oranmore, Galway	**State/Province**	
Country	IE	Postal Code	
Phone Number		Fax Number	
Email Address			

Additional Applicant Data may be generated within this form by selecting the Add button. Add

Assignee Information including Non-Applicant Assignee Information:

Providing assignment information in this section does not substitute for compliance with any requirement of part 3 of Title 37 of CFR to have an assignment recorded by the Office.

Application Data Sheet 37 CFR 1.76	Attorney Docket Number	NEURE-008/08US 35242/160
	Application Number	
Title of Invention	SYSTEMS AND METHODS FOR THERAPEUTIC NASAL TREATMENT USING HANDHELD DEVICE	

Assignee 1

Complete this section if assignee information, including non-applicant assignee information, is desired to be included on the patent application publication. An assignee-applicant identified in the "Applicant Information" section will appear on the patent application publication as an applicant. For an assignee-applicant, complete this section only if identification as an assignee is also desired on the patent application publication.

Remove

If the Assignee or Non-Applicant Assignee is an Organization check here. ☐

Prefix	**Given Name**	Middle Name	**Family Name**	Suffix

Mailing Address Information For Assignee including Non-Applicant Assignee:

Address 1			
Address 2			
City		**State/Province**	
Country i		Postal Code	
Phone Number		Fax Number	
Email Address			

Additional Assignee or Non-Applicant Assignee Data may be generated within this form by selecting the Add button. Add

Signature:

Remove

NOTE: This Application Data Sheet must be signed in accordance with 37 CFR 1.33(b). **However, if this Application Data Sheet is submitted with the INITIAL filing of the application and either box A or B is not checked in subsection 2 of the "Authorization or Opt-Out of Authorization to Permit Access" section, then this form must also be signed in accordance with 37 CFR 1.14(c).**

This Application Data Sheet **must** be signed by a patent practitioner if one or more of the applicants is a **juristic entity** (e.g., corporation or association). If the applicant is two or more joint inventors, this form must be signed by a patent practitioner, **all** joint inventors who are the applicant, or one or more joint inventor-applicants who have been given power of attorney (e.g., see USPTO Form PTO/AIA/81) on behalf of **all** joint inventor-applicants.

See 37 CFR 1.4(d) for the manner of making signatures and certifications.

Signature	/Adam M. Schoen/			Date (YYYY-MM-DD)	2024-04-26
First Name	Adam	Last Name	Schoen	Registration Number	58,576

Additional Signature may be generated within this form by selecting the Add button. Add

Application Data Sheet 37 CFR 1.76	Attorney Docket Number	NEURE-008/08US 35242/160
	Application Number	
Title of Invention	SYSTEMS AND METHODS FOR THERAPEUTIC NASAL TREATMENT USING HANDHELD DEVICE	

This collection of information is required by 37 CFR 1.76. The information is required to obtain or retain a benefit by the public which is to file (and by the USPTO to process) an application. Confidentiality is governed by 35 U.S.C. 122 and 37 CFR 1.14. This collection is estimated to take 23 minutes to complete, including gathering, preparing, and submitting the completed application data sheet form to the USPTO. Time will vary depending upon the individual case. Any comments on the amount of time you require to complete this form and/or suggestions for reducing this burden, should be sent to the Chief Information Officer, U.S. Patent and Trademark Office, U.S. Department of Commerce, P.O. Box 1450, Alexandria, VA 22313-1450. DO NOT SEND FEES OR COMPLETED FORMS TO THIS ADDRESS. **SEND TO: Commissioner for Patents, P.O. Box 1450, Alexandria, VA 22313-1450.**

Privacy Act Statement

The Privacy Act of 1974 (P.L. 93-579) requires that you be given certain information in connection with your submission of the attached form related to a patent application or patent. Accordingly, pursuant to the requirements of the Act, please be advised that: (1) the general authority for the collection of this information is 35 U.S.C. 2(b)(2); (2) furnishing of the information solicited is voluntary; and (3) the principal purpose for which the information is used by the U.S. Patent and Trademark Office is to process and/or examine your submission related to a patent application or patent. If you do not furnish the requested information, the U.S. Patent and Trademark Office may not be able to process and/or examine your submission, which may result in termination of proceedings or abandonment of the application or expiration of the patent.

The information provided by you in this form will be subject to the following routine uses:

1 The information on this form will be treated confidentially to the extent allowed under the Freedom of Information Act (5 U.S.C. 552) and the Privacy Act (5 U.S.C. 552a). Records from this system of records may be disclosed to the Department of Justice to determine whether the Freedom of Information Act requires disclosure of these records.

2. A record from this system of records may be disclosed, as a routine use, in the course of presenting evidence to a court, magistrate, or administrative tribunal, including disclosures to opposing counsel in the course of settlement negotiations.

3 A record in this system of records may be disclosed, as a routine use, to a Member of Congress submitting a request involving an individual, to whom the record pertains, when the individual has requested assistance from the Member with respect to the subject matter of the record.

4. A record in this system of records may be disclosed, as a routine use, to a contractor of the Agency having need for the information in order to perform a contract. Recipients of information shall be required to comply with the requirements of the Privacy Act of 1974, as amended, pursuant to 5 U.S.C. 552a(m).

5. A record related to an International Application filed under the Patent Cooperation Treaty in this system of records may be disclosed, as a routine use, to the International Bureau of the World Intellectual Property Organization, pursuant to the Patent CooperationTreaty.

6. A record in this system of records may be disclosed, as a routine use, to another federal agency for purposes of National Security review (35 U.S.C. 181) and for review pursuant to the Atomic Energy Act (42 U.S.C. 218(c)).

7. A record from this system of records may be disclosed, as a routine use, to the Administrator, General Services, or his/her designee, during an inspection of records conducted by GSA as part of that agency's responsibility to recommend improvements in records management practices and programs, under authority of 44 U.S.C. 2904 and 2906. Such disclosure shall be made in accordance with the GSA regulations governing inspection of records for this purpose, and any other relevant (i.e., GSA or Commerce) directive. Such disclosure shall not be used to make determinations about individuals.

8. A record from this system of records may be disclosed, as a routine use, to the public after either publication of the application pursuant to 35 U.S.C. 122(b) or issuance of a patent pursuant to 35 U.S.C. 151. Further, a record may be disclosed, subject to the limitations of 37 CFR 1.14, as a routine use, to the public if the record was filed in an application which became abandoned or in which the proceedings were terminated and which application is referenced by either a published application, an application open to public inspections or an issued patent.

9. A record from this system of records may be disclosed, as a routine use, to a Federal, State, or local law enforcement agency, if the USPTO becomes aware of a violation or potential violation of law or regulation.

SYSTEMS AND METHODS FOR THERAPEUTIC NASAL TREATMENT USING HANDHELD DEVICE

Cross-reference to Related Applications

This application is a continuation of U.S. Patent Application No. 18/411,476, filed January 12, 2024, which is a continuation of U.S. Patent Application No. 17/225,560, filed April 8, 2021 (now issued as U.S. Patent No. 11,883,091), which claims the benefit of, and priority to, U.S. Provisional Patent Application No. 63/007,584, filed April 9, 2020, the contents of each of which are hereby incorporated by reference in their entireties.

Field of the Invention

The invention generally relates to systems and methods for improving sleep by treating at least one of rhinitis, congestion, and/or rhinorrhea to thereby reduce or eliminate symptoms associated therewith, including, but not limited to, nasal congestion, coughing, sneezing, and nasal or throat irritation and itching.

Background

Many people suffer from breathing issues as a result of various health-related problems. For example, rhinitis is an inflammatory disease of the nose and is reported to affect up to 40% of the population. It is the fifth most common chronic disease in the United States. Allergic rhinitis accounts for up to 65% of all rhinitis patients. Allergic rhinitis is an immune response to an exposure to allergens, such as airborne plant pollens, pet dander or dust. As non-allergic rhinitis is not an immune response, its symptoms are not normally seasonal and are often more persistent.

The most common and impactful symptoms of rhinitis (both allergic and non-allergic) include a runny nose, coughing, sneezing, nasal and/or throat irritation and itching, and overall general congestion of the nasal passage. As a result, sleep problems are very common in individuals suffering from rhinitis, as such symptoms impact a person's ability to either fall asleep or remain asleep for adequate periods of time. In addition, sleep problems are linked with fatigue and daytime sleepiness, as well as decreased productivity at work or school, impaired learning and memory, depression, and a reduced quality of life.

For example, most individuals suffering from rhinitis are unable to breathe efficiently through their nose due to restricted nasal passages, and are prone to breathe through their mouth. Studies have established that nocturnal mouth breathing is a primary cause of loud snoring, which is a precursor to sleep apnea, and sleep apnea is a precursor to heart attacks. Due to the lack of proper oxygenation, the ability to deliver fully oxygenated blood to the cells is also greatly reduced. In contrast, proper nose breathing delivers fully oxygenated blood to the body, reduces hypertension and stress, and promotes cardiovascular health. Thus, proper nose breathing is essential for one's wellbeing.

Conventional nose breathing aids may provide relief from restricted breathing, but such relief is temporary. For example, traditional aids include nasal sprays, and various types of nasal dilators, sinus cones, nasal strips, and springs to hold nasal passages open. The disadvantage of most nose mounted dilators, particularly those mounted within the nasal cavity, is that while most of them dilate the nasal passages, the product itself becomes a new obstruction, and is most noticeable during exhalation. Upon exhalation, the user will experience the deflection of hoi breath against the apparatus. Consequently, this apparatus can become bothersome, and will generally not be worn for extended periods of time, thereby forfeiting the benefits of enhanced nose breathing.

Similarly, while allergen avoidance and pharmacotherapy are relatively effective in the majority of mild cases of rhinitis, such medications need to be taken on a long-term basis, incurring costs and side effects and often have suboptimal efficacy. For example, pharmaceutical agents prescribed for rhinosinusitis have limited efficacy and undesirable side effects, such as sedation, irritation, impairment to taste, sore throat, dry nose, and other side effects.

There are two modern surgical options: the delivery of thermal energy to the inflamed soft tissue, resulting in scarring and temporary volumetric reduction of the tissue to improve nasal airflow; and microdebrider resection of the inflamed soft tissue, resulting in the removal of tissue to improve nasal airflow. Both options address congestion as opposed to rhinorrhea and have risks ranging from bleeding and scarring to the use of general anesthetic. Accordingly, current surgical options fail to adequately address the various conditions and the associated symptoms causing breathing issues.

Summary

The invention recognizes that a problem with current aids and surgical procedures is that such products and procedures are either temporary or are not accurate and cause significant collateral damage in order to treat rhinitis and further fail to adequately treat the underlying symptoms and thus further fail to address sleeping problems.

The invention solves that problem by providing treatment devices having a combination of unique components, including an elongate body (which may be in the form of a shaft or sheath, or other elongate body), a retractable and expandable multi-segment end effector, and handle, that, as a whole, provide a high level of precise control and feedback to an operator during a procedure. In particular, the elongate body is configured to not only aid an operator in the positioning and delivery of the multi-segment end effector to a desired target site within the nasal cavity, but further includes an electrode array provided along a length thereof that is configured to deliver energy to specific target sites within the nasal passage and nasal cavity, in conjunction with neuromodulation provided by the multi-segment end effector. The multi-segment end effector is configured to complement anatomy at multiple different locations within the nasal cavity. The handle is configured with multiple ergonomic and functional features that improve device use and feedback, such as independent control of deployment of the end effector and energy delivery and a shape associated with the architecture of the end effector in the deployed configuration. The handle may also include one or more markings that provide a user with a spatial orientation of the end effector while the end effector is in a nasal cavity.

In that manner, the present invention provides devices that are capable of highly conforming to anatomical variations within a nasal passage and nasal cavity while providing unprecedented control and guidance to an operator so that an operator can perform an accurate, minimally invasive, and localized application of energy to one or more target sites within the nasal passage and nasal cavity to cause multi-point interruption of neural signal without causing collateral damage or disruption to other neural structures.

Unlike other surgical treatments for rhinitis, the devices of the invention are minimally invasive. Accordingly, a procedure can be performed in an office environment under local anesthetic. The multi-segment end-effector allows for targeting the autonomic supply to the nasal turbinates and will have a positive impact on both allergic and non-allergic rhinitis. Using this approach, it is expected that devices of the invention will be able to provide long-term

symptom relief (e.g., years instead of months). Since the treatment is accurate with minimal collateral damage to the surrounding tissue, patients will begin to feel symptom relief immediately following the treatment. It is fully expected that patients will be removed from their pharmacotherapies following this therapy.

The systems and methods of the present invention include a handheld device comprising a retractable and expandable multi-segment end effector that, once delivered to the one more target sites within the nasal cavity, can expand to a specific shape and/or size corresponding to anatomical structures within the nasal cavity and associated with the target sites. In particular, the end effector includes at least a first flexible segment and a second flexible segment, each of which includes a specific geometry when in a deployed configuration to complement anatomy of respective locations within the nasal cavity. Once deployed, the first and second segments contact and conform to a shape of the respective locations, including conforming to and complementing shapes of one or more anatomical structures at the respective locations. In turn, the first and second segments become accurately positioned within the nasal cavity to subsequently deliver, via one or more electrodes, precise and focused application of RF thermal energy to the one or more target sites to thereby therapeutically modulate associated neural structures. More specifically, the first and second segments have shapes and sizes when in the expanded configuration that are specifically designed to place portions of the first and second segments, and thus one or more electrodes associated therewith, into contact with target sites within nasal cavity associated with postganglionic parasympathetic fibers that innervate the nasal mucosa.

The handheld device further includes an elongate body operably associated with the end effector and a handle operably associated with the elongate body. The elongate body may be in the form of a shaft or sheath (or other elongate body operably associated with or coupled to the end effector). The elongate body may include a pre-defined shape (i.e., bent or angled at a specific orientation) so as to assist the surgeon (or other medical professional) for placement of the end effector at the target sites. The elongate body further includes one or more electrodes provided on one or respective portions along a length thereof and can be used to deliver energy to tissue adjacent to, or in contact with, such portions of the elongate body. For example, in some embodiments, the elongate body may reside with a portion of the nasal cavity proximate to the inferior turbinate upon advancing and deploying the multi-segment end effector in the

desired location (i.e., a target site associated with a sphenopalatine foramen within the nasal cavity of the patient). Accordingly, in addition to delivering energy from the electrodes of the multi-segment end effector, the surgeon may also activate and deliver energy from electrodes associated with the elongate body to tissue associated with the inferior turbinate. Such energy may be delivered at a level sufficient to reduce engorgement of tissue associated with the inferior turbinate to thereby increase volumetric flow through a nasal passage of the patient and improve a patient's ability to breathe.

Accordingly, the treatment device of the present invention recognizes the desire or need to treat larger areas within the nasal cavity or passage that are located outside of a treatment zone associated with the end effector. For example, when performing surgical procedures using current rhinitis treatment devices, the surgeon must reposition an end effector when attempting to treat multiple areas within the nasal cavity, particularly those areas that are located outside of any given treatment zone. The need to reposition the end effector multiple times during a given procedure can lead to inaccuracy when delivering energy, resulting in unintended collateral damage, and further increases the time in which it takes to complete a given procedure. The treatment device of the present invention recognizes and addresses this problem by providing an elongate body including one or more electrodes thereon, in addition to a multi-segment end effector operably associated with the elongate body and including separate electrodes thereon. Accordingly, the elongate body serves to not only aid in positioning and delivering the end effector to a desired target site (to which the end effector may deliver energy), but the elongate body can also deliver energy to a target site that is separate and remote from the end effector. Such a design improves the efficiency with which a given procedure can be accomplished, particularly those procedures requiring treatment to multiple, separate areas within the nasal cavity or passage.

The handle includes an ergonomically-designed grip portion which provides ambidextrous use for both left and right handed use and conforms to hand anthropometrics to allow for at least one of an overhand grip style and an underhand grip style during use in a procedure. The handle further includes multiple user-operated mechanisms, including at least a first mechanism for deployment of the end effector from the retracted configuration to the expanded deployed configuration and a second mechanism for controlling of energy output by the end effector. The user inputs for the first and second mechanisms are positioned a sufficient

distance to one another to allow for simultaneous one-handed operation of both user inputs during a procedure. Accordingly, the handle accommodates various styles of grip and provides a degree of comfort for the surgeon, thereby further improving execution of the procedure and overall outcome. Furthermore, the handle and/or the elongate body may include markings (e.g., text, symbols, color-coding insignia, etc.) that provide a surgeon with a spatial orientation of the end effector while the end effector is in a nasal cavity. In particular, multiple markings may be provided on the handle and/or elongate body and provide a visual indication of the spatial orientation of one or more portions of the first segment and second segment of the end effector when in the deployed configurations. Thus, during initial placement of the end effector, when in a retracted configuration and enclosed within the elongate body, a surgeon can rely on the markings on the handle and/or elongate body as a visual indication of the spatial orientation of the end effector (e.g., linear, axial, and/or depth position) prior to deployment to thereby ensure that, once deployed, the end effector, including both the first and second segments, are positioned in the intended locations within the nasal cavity.

Accordingly, the handheld device of the present invention provides a surgeon with a user-friendly, non-invasive, and precise means for treating rhinorrhea and other symptoms of rhinosinusitis, notably nasal congestion, coughing, sneezing, and nasal and throat irritation, to thereby improve a patient's sleep (i.e., improve a patient's nasal breathability to increase chances of successfully falling asleep and remaining asleep for adequate periods of time). By improving one's sleep, the systems and methods of the present invention can further improve one's overall quality of life by reducing the subsequent issues commonly associated with poor sleep, such as fatigue and daytime sleepiness, as well as decreased productivity at work or school, impaired learning and memory, and depression.

The handheld device provides for the precise and focused application of energy to the intended target sites for therapeutic modulation of the intended structures, including, but not limited to, engorged sub-mucosal tissue as well as neural structures without causing collateral and unintended damage or disruption to other structures. In particular, by targeting only those specific structures associated with such conditions, notably tissue responsible for providing engorgement of certain structures (i.e., inferior and middle turbinates) and postganglionic parasympathetic nerves innervating nasal mucosa, thereby reducing engorgement of inferior turbinate tissue to thereby increase volumetric flow through a nasal passage of the patient as well

as disrupting the parasympathetic nerve supply and interrupting parasympathetic tone. The device further allows for treatment of multiple areas within the nasal passage and/or nasal cavity that would normally require repositioning of an end effector due to their separated locations. In particular, inclusion of an elongate body with a dedicated set of electrodes, in addition to the multi-segment end effector with its own set of electrodes, allows for two separate target sites to receive treatment simultaneously, thereby reducing the need to reposition the end effector. Accordingly, such treatment is effective at treating rhinosinusitis conditions while greatly reducing the risk of causing lateral damage or disruption to other tissues, including other nerve fibers, thereby reducing the likelihood of unintended complications and side effects.

One aspect of the invention provides a method for improving a patient's sleep by treating at least one of rhinitis, congestion, and rhinorrhea within a sino-nasal cavity of the patient. The method includes delivering energy to one or more target sites within a sino-nasal cavity of the patient to disrupt multiple neural signals to, and/or result in local hypoxia of, mucus producing and/or mucosal engorgement elements, thereby reducing production of mucus and/or mucosal engorgement within a nose of the patient and reducing or eliminate one or more symptoms associated with at least one of rhinitis, congestion, and rhinorrhea to improve nasal breathability of the patient. The one or more symptoms associated with at least one of rhinitis, congestion, and rhinorrhea are selected from the group consisting of nasal congestion, coughing, sneezing, and nasal or throat irritation and itching.

In some embodiments, the step of delivering energy results in ablation of targeted tissue at one or more locations to thereby disrupt the multiple neural signals to the mucus producing and/or mucosal engorgement elements within the nose. For example, the targeted tissue may be associated with one or more target sites proximate or inferior to a sphenopalatine foramen. The energy may be delivered at a level sufficient to therapeutically modulate postganglionic parasympathetic nerves innervating nasal mucosa at foramina and or microforamina of a palatine bone of the patient. As a result, the energy delivered may cause multiple points of interruption of neural branches extending through foramina and microforamina of palatine bone.

In some embodiments, the step of delivering energy results in ablation of targeted tissue at one or more locations to thereby result in local hypoxia of the mucus producing and/or mucosal engorgement elements within the nose. For example, in some embodiments, the ablation of targeted tissue may cause thrombus formation within one or more blood vessels

associated with mucus producing and/or mucosal engorgement elements within the nose. As such, the resulting local hypoxia of the mucus producing and/or mucosal engorgement elements may result in decreased mucosal engorgement to thereby increase volumetric flow through a nasal passage of the patient.

In some embodiments, the ablation is thermal ablation. The thermal ablation may include cyro-ablation, for example. In other embodiments, the ablation may be caused by delivery of radiofrequency (RF) energy.

In some embodiments, the ablation may be caused by a treatment device comprising a handle, an elongate body extending therefrom, and a retractable and expandable end effector operably associated with the elongate body. Accordingly, during a procedure, the method may include advancing the end effector into the sino-nasal cavity under image guidance. The handle may generally control transformation of the end effector from a retracted state to an expanded state. The end effector may include a plurality of energy delivery elements provided thereon, such as electrodes, for example.

When in the expanded state, the end effector may generally position one or more of the plurality of energy delivery elements relative to the one or more target sites. In some embodiments, the end effector includes a proximal segment that is spaced apart from a separate distal segment. In some embodiments, the proximal segment may include a first set of flexible support elements arranged in a deployed configuration to fit around at least a portion of a middle turbinate at an anterior position relative to a lateral attachment and a posterior-inferior edge of the middle turbinate and position one or more energy delivery elements into contact with one or more respective tissue locations associated with the middle turbinate and the distal segment may include a second set of flexible support elements configured in a deployed configuration to position one or more energy delivery elements into contact with one or more respective tissue locations in a cavity at a posterior position relative to the lateral attachment and posterior-inferior edge of the middle turbinate.

In some embodiments, the elongate body may include a shaft to which the end effector is coupled. The shaft includes an outer sheath surrounding a hypotube or metallic member, wherein at least one of the outer sheath and hypotube and metallic member includes the one or more energy delivering elements provided thereon. Yet still, in other embodiments, the elongate body may include one or more of a plurality of support elements forming at least a portion of the

end effector. The energy delivering elements of the elongate body may be configured to deliver energy at one or more target sites associated with an inferior or middle turbinate within the sino-nasal cavity of the patient at a level sufficient to reduce engorgement of tissue associated therewith to thereby increase volumetric flow through a nasal passage of the patient.

Brief Description of the Drawings

FIGS. 1A and 1B are diagrammatic illustrations of a therapeutic neuromodulation system for treating a condition within a nasal cavity using a handheld device according to some embodiments of the present disclosure.

FIG. 2 is a diagrammatic illustration of the console coupled to the handheld neuromodulation device consistent with the present disclosure, further illustrating a multi-segment end effector of the handheld device for delivering energy, via proximal and distal segments, to tissue at the one or more target sites within the nasal cavity.

FIG. 3A is a cut-away side view illustrating the anatomy of a lateral nasal wall.

FIG. 3B is an enlarged side view of the nerves of the lateral nasal wall of FIG. 1A.

FIG. 3C is a front view of a left palatine bone illustrating geometry of microforamina in the left palatine bone.

FIG. 4 is a side view of one embodiment of a handheld device for providing therapeutic nasal neuromodulation consistent with the present disclosure.

FIG. 5A is an enlarged, perspective view of the multi-segment end effector illustrating the first (proximal) segment and second (distal) segment.

FIG. 5B is an exploded, perspective view of the multi-segment end effector.

FIG. 5C is an enlarged, top view of the multi-segment end effector.

FIG. 5D is an enlarged, side view of the multi-segment end effector.

FIG. 5E is an enlarged, front (proximal facing) view of the first (proximal) segment of the multi-segment end effector.

FIG. 5F is an enlarged, front (proximal facing) view of the second (distal) segment of the multi-segment end effector.

FIG. 6 is a perspective view, partly in section, of a portion of a support element illustrating an exposed conductive wire serving as an energy delivery element or electrode element.

FIG. 7 is a cross-sectional view of a portion of the shaft of the handheld device taken along lines 7-7 of FIG. 4.

FIG. 7A is a side view of the shaft and multi-segment end effector extending from a distal end thereof, further illustrating a plurality of electrodes provided on separate respective portions of the shaft.

FIG. 7B is a sectional view of the shaft illustrating one embodiment in which a plurality of electrodes are embedded within the outer sheath of the shaft.

FIG. 7C is a sectional view of the shaft illustrating another embodiment in which a plurality of electrodes are provided on the hypotube and associated portions of the outer sheath are absent or removed to thereby expose the underlying electrodes on the hypotube.

FIG. 7D is a perspective view of a length of the shaft illustrating exposed portions of the outer sheath to reveal the underlying electrodes provided on the hypotube.

FIG. 7E is a sectional view of the shaft illustrating another embodiment in which a plurality of electrodes are provided on one or more support elements extending through the hypotube, portions of which form the end effector.

FIG. 7F is an enlarged, perspective view of the multi-segment end effector extending from the shaft and illustrating the plurality of electrodes provided on the support elements.

FIG. 7G is a cross-sectional view of the shaft illustrating exemplary portions of the shaft that are retractable and expandable.

FIG. 8 is a side view of the handle of the handheld device.

FIG. 9 is a side view of the handle illustrating internal components enclosed within.

FIG. 10 is a side view of the handle illustrating multiple markings on a portion of the handle for providing a user with a spatial orientation of the end effector while the end effector is in a nasal cavity.

FIG. 11 is a perspective view of the shaft illustrating multiple markings on a distal portion thereof for providing a user with a spatial orientation of the end effector while the end effector is in a nasal cavity.

FIG. 12 is a partial cut-away side views illustrating one approach for delivering a shaft and an associated end effector to respective target sites within a nasal region in accordance with embodiments of the present disclosure.

FIG. 13 is a flow diagram illustrating one embodiment of a method for treating a condition within a nasal cavity of a patient.

FIG. 14 is a flow diagram illustrating another embodiment of a method for treating a condition within a nasal cavity of a patient.

FIG. 15 is a flow diagram illustrating another embodiment of a method for treating a condition within a nasal cavity of a patient.

FIG. 16 is a flow diagram illustrating another embodiment of a method for treating a condition within a sino-nasal cavity of a patient.

FIG. 17 is a flow diagram illustrating an embodiment of a method for improving a patient's sleep by treating at least one of rhinitis, congestion, and rhinorrhea within a sino-nasal cavity of the patient.

Detailed Description

There are various conditions related to the nasal cavity which may impact breathing and other functions of the nose. One of the more common conditions is rhinitis, which is defined as inflammation of the membranes lining the nose. The symptoms of rhinitis include nasal blockage, obstruction, congestion, nasal discharge (e.g., rhinorrhea and/or posterior nasal drip), facial pain, facial pressure, and/or reduction or complete loss of smell and/or taste. Sinusitis is another common condition, which involves an inflammation or swelling of the tissue lining the sinuses, and results in similar symptoms as rhinitis, and may further lead to infection if left untreated or if it persists for prolonged periods of time. Rhinitis and sinusitis are frequently associated with one another, as sinusitis is often preceded by rhinitis. Accordingly, the term rhinosinusitis is often used to describe both conditions.

As a result of such symptoms, many who suffer from rhinosinusitis also have sleeping difficulties (i.e., difficulty falling asleep and/or remaining asleep). Sleep is a vital component of a person's overall health and well-being. Studies have shown that sleep problems are linked with fatigue and daytime sleepiness, as well as decreased productivity at work or school, impaired learning and memory, depression, and a reduced quality of life.

Depending on the duration and type of systems, rhinosinusitis can fall within different subtypes, including allergic rhinitis, non-allergic rhinitis, chronic rhinitis, acute rhinitis, recurrent rhinitis, chronic sinusitis, acute sinusitis, recurrent sinusitis, and medical resistant rhinitis and/or

sinusitis, in addition to combinations of one or more of the preceding conditions. It should be noted that an acute rhinosinusitis condition is one in which symptoms last for less than twelve weeks, whereas a chronic rhinosinusitis condition refers to symptoms lasting longer than twelve weeks.

A recurrent rhinosinusitis condition refers to four or more episodes of an acute rhinosinusitis condition within a twelve-month period, with resolution of symptoms between each episode. There are numerous environmental and biological causes of rhinosinusitis. Non-allergic rhinosinusitis, for example, can be caused by environmental irritants, medications, foods, hormonal changes, and/or nasal septum deviation. Triggers of allergic rhinitis can include exposure to seasonal allergens, perennial allergens that occur any time of year, and/or occupational allergens. Accordingly, rhinosinusitis affects millions of people and is a leading cause for patients to seek medical care.

The invention recognizes that a problem with current aids and surgical procedures is that such products and procedures are either temporary or are not accurate and cause significant collateral damage in order to treat rhinitis and further fail to adequately treat the underlying symptoms and thus further fail to address sleeping problems.

The invention solves that problem by providing treatment devices having a combination of unique components, including an elongate body (which may be in the form of a shaft or sheath, or other elongate body), a retractable and expandable multi-segment end effector, and handle, that, as a whole, provide a high level of precise control and feedback to an operator during a procedure. In particular, the elongate body is configured to not only aid an operator in the positioning and delivery of the multi-segment end effector to a desired target site within the nasal cavity, but further includes an electrode array provided along a length thereof that is configured to deliver energy to specific target sites within the nasal passage and nasal cavity, in conjunction with neuromodulation provided by the multi-segment end effector. The multi-segment end effector is configured to complement anatomy at multiple different locations within the nasal cavity. The handle is configured with multiple ergonomic and functional features that improve device use and feedback, such as independent control of deployment of the end effector and energy delivery and a shape associated with the architecture of the end effector in the deployed configuration. The handle may also include one or more markings that provide a user with a spatial orientation of the end effector while the end effector is in a nasal cavity.

In that manner, the present invention provides devices that are capable of highly conforming to anatomical variations within a nasal passage and nasal cavity while providing unprecedented control and guidance to an operator so that an operator can perform an accurate, minimally invasive, and localized application of energy to one or more target sites within the nasal passage and nasal cavity to cause multi-point interruption of neural signal without causing collateral damage or disruption to other neural structures.

Unlike other surgical treatments for rhinitis, the devices of the invention are minimally invasive. Accordingly, a procedure can be performed in an office environment under local anesthetic. The multi-segment end-effector allows for targeting the autonomic supply to the nasal turbinates and will have a positive impact on both allergic and non-allergic rhinitis. Using this approach, it is expected that devices of the invention will be able to provide long-term symptom relief (e.g., years instead of months). Since the treatment is accurate with minimal collateral damage to the surrounding tissue, patients will begin to feel symptom relief immediately following the treatment. It is fully expected that patients will be removed from their pharmacotherapies following this therapy.

The treatment devices of the present invention provides a surgeon with a user-friendly, non-invasive, and precise means for treating rhinorrhea and other symptoms of rhinosinusitis, notably nasal congestion, coughing, sneezing, and nasal and throat irritation, to thereby improve a patient's sleep (i.e., improve a patient's nasal breathability to increase chances of successfully falling asleep and remaining asleep for adequate periods of time). By improving one's sleep, the systems and methods of the present invention can further improve one's overall quality of life by reducing the subsequent issues commonly associated with poor sleep, such as fatigue and daytime sleepiness, as well as decreased productivity at work or school, impaired learning and memory, and depression.

The treatment devices provide for the precise and focused application of energy to the intended target sites for therapeutic modulation of the intended structures, including, but not limited to, engorged sub-mucosal tissue as well as neural structures without causing collateral and unintended damage or disruption to other structures. In particular, by targeting only those specific structures associated with such conditions, notably tissue responsible for providing engorgement of certain structures (i.e., inferior and middle turbinates) and postganglionic parasympathetic nerves innervating nasal mucosa, thereby reducing engorgement of inferior

turbinate tissue to thereby increase volumetric flow through a nasal passage of the patient as well as disrupting the parasympathetic nerve supply and interrupting parasympathetic tone. The device further allows for treatment of multiple areas within the nasal passage and/or nasal cavity that would normally require repositioning of an end effector due to their separated locations. In particular, inclusion of an elongate body with a dedicated set of electrodes, in addition to the multi-segment end effector with its own set of electrodes, allows for two separate target sites to receive treatment simultaneously, thereby reducing the need to reposition the end effector. Accordingly, such treatment is effective at treating rhinosinusitis conditions while greatly reducing the risk of causing lateral damage or disruption to other tissues, including other nerve fibers, thereby reducing the likelihood of unintended complications and side effects.

For example, the systems and methods of the present invention include a handheld device comprising a retractable and expandable multi-segment end effector that, once delivered to the one more target sites within the nasal cavity, can expand to a specific shape and/or size corresponding to anatomical structures within the nasal cavity and associated with the target sites. In particular, the end effector includes at least a first flexible segment and a second flexible segment, each of which includes a specific geometry when in a deployed configuration to complement anatomy of respective locations within the nasal cavity. Once deployed, the first and second segments contact and conform to a shape of the respective locations, including conforming to and complementing shapes of one or more anatomical structures at the respective locations. In turn, the first and second segments become accurately positioned within the nasal cavity to subsequently deliver, via one or more electrodes, precise and focused application of RF thermal energy to the one or more target sites to thereby therapeutically modulate associated neural structures. More specifically, the first and second segments have shapes and sizes when in the expanded configuration that are specifically designed to place portions of the first and second segments, and thus one or more electrodes associated therewith, into contact with target sites within nasal cavity associated with postganglionic parasympathetic fibers that innervate the nasal mucosa.

The handheld device further includes an elongate body operably associated with the end effector and a handle operably associated with the elongate body. The elongate body may be in the form of a shaft or sheath (or other elongate body operably associated with or coupled to the end effector). The elongate body may include a pre-defined shape (i.e., bent or angled at a

specific orientation) so as to assist the surgeon (or other medical professional) for placement of the end effector at the target sites. The elongate body further includes one or more electrodes provided on one or respective portions along a length thereof and can be used to deliver energy to tissue adjacent to, or in contact with, such portions of the elongate body. For example, in some embodiments, the elongate body may reside with a portion of the nasal cavity proximate to the inferior turbinate upon advancing and deploying the multi-segment end effector in the desired location (i.e., a target site associated with a sphenopalatine foramen within the nasal cavity of the patient). Accordingly, in addition to delivering energy from the electrodes of the multi-segment end effector, the surgeon may also activate and deliver energy from electrodes associated with the elongate body to tissue associated with the inferior turbinate. Such energy may be delivered at a level sufficient to reduce engorgement of tissue associated with the inferior turbinate to thereby increase volumetric flow through a nasal passage of the patient and improve a patient's ability to breathe.

Accordingly, the treatment device of the present invention recognizes the desire or need to treat larger areas within the nasal cavity or passage that are located outside of a treatment zone associated with the end effector. For example, when performing surgical procedures using current rhinitis treatment devices, the surgeon must reposition an end effector when attempting to treat multiple areas within the nasal cavity, particularly those areas that are located outside of any given treatment zone. The need to reposition the end effector multiple times during a given procedure can lead to inaccuracy when delivering energy, resulting in unintended collateral damage, and further increases the time in which it takes to complete a given procedure. The treatment device of the present invention recognizes and addresses this problem by providing an elongate body including one or more electrodes thereon, in addition to a multi-segment end effector operably associated with the elongate body and including separate electrodes thereon. Accordingly, the elongate body serves to not only aid in positioning and delivering the end effector to a desired target site (to which the end effector may deliver energy), but the elongate body can also deliver energy to a target site that is separate and remote from the end effector. Such a design improves the efficiency with which a given procedure can be accomplished, particularly those procedures requiring treatment to multiple, separate areas within the nasal cavity or passage.

It should be noted that, although many of the embodiments are described with respect to

devices, systems, and methods for therapeutically modulating tissue (neural and/or non-neural tissue) in the nasal region for the treatment of rhinitis, congestion, and/or rhinorrhea, other applications and other embodiments in addition to those described herein are within the scope of the present disclosure. For example, at least some embodiments of the present disclosure may be useful for the treatment of other indications, such as the treatment of chronic sinusitis and epistaxis. In particular, the embodiments described herein may be configured to treat allergic rhinitis, non-allergic rhinitis, chronic rhinitis, acute rhinitis, chronic sinusitis, acute sinusitis, chronic rhinosinusitis, acute rhinosinusitis, and/or medical resistant rhinitis.

It should further be noted that the devices described herein, most notably the elongate body (which may be in the form of a shaft, outer sheath, hypotube, or other elongate body that is operably associated with the end effector) may be included and incorporated in any of the treatment devices, systems, and methods illustrated and described in U.S. Publication Nos.: 2016/0331459; 2018/0133460; 2017/0231651; 2017/0252089; 2018/0177542; 2018/0177546; 2018/0185085; 2018/0228533; 2018/0317997; 2018/0344378; 2019/0076185; 2019/0175242; 2019/0201069; 2019/0231409; 2019/0282289; 2016/0354136; 2017/0231474; 2018/0078327; 2018/0103994; 2018/0125560; 2018/0153375; 2018/0317993; 2018/0344411; and 2019/0083157, as well as U.S. Patent Nos.: 8,936,594; 8,986,301; 9,072,597; 9,179,964; 9,179,967; 9,237,924; 9,415,194; 9,433,463; 9,452,010; 9,486,278; 9,526,571; 9,687,296; 9,788,886; 9,801,752; 9,888,957; 9,913,682; 9,943,361; 10,028,780; 10,265,115; 10,335,221; 10,376,300; 10,398,489; 10,456,185; 10,456,186; 10,485,603; 7,758,571; 9,687,288; 9,763,723; 9,763,743; 10,028,781; 10,159,538; 10,201,687; 10,307,200; and 10,448,985, the contents of each of which are incorporated by reference herein in their entireties.

FIGS. 1A and 1B are diagrammatic illustrations of a therapeutic neuromodulation system 100 for treating a condition within a nasal cavity using a handheld device 102 according to some embodiments of the present disclosure. The system 100 generally includes a neuromodulation device 102 and a neuromodulation console 104 to which the device 102 is to be connected. FIG. 2 is a diagrammatic illustration of the console 104 coupled to the handheld neuromodulation device 102. As illustrated, the neuromodulation device 102 is a handheld device, which includes a retractable and expandable multi-segment end effector 114, a shaft 116 operably associated with the end effector 114 and a handle 118 operably associated with the shaft 116. The end effector 114 is configured to be advanced into the nasal cavity of a patient 12 and positioned at a

location associated with one or more target sites to undergo therapeutic neuromodulation treatment. It should be noted that the terms "end effector" and "therapeutic assembly" may be used interchangeably throughout this disclosure.

For example, a surgeon or other medical professional performing a procedure can utilize the handle 118 to manipulate and advance the shaft 116 within the nasal cavity, wherein the shaft 116 is configured to locate at least a distal portion thereof intraluminally at a treatment or target site within a nasal region. The one or more target sites may generally be associated with postganglionic parasympathetic fibers that innervate the nasal mucosa. The target site may be a region, volume, or area in which the target nerves are located and may differ in size and shape depending upon the anatomy of the patient. Once positioned, the end effector 114 may be deployed and subsequently deliver energy to the one or more target sites to thereby therapeutically modulating nerves of interest, particularly nerves associated with a rhinosinusitis condition so as to treat such condition. For example, the end effector 114 may include at least one energy delivery element, such as an electrode, configured to therapeutically modulate the postganglionic parasympathetic nerves. For example, one or more electrodes may be provided by one or more portions of the end-effector 114, wherein the electrodes may be configured to apply electromagnetic neuromodulation energy (e.g., radiofrequency (RF) energy) to target sites. In other embodiments, the end effector 114 may include other energy delivery elements configured to provide therapeutic neuromodulation using various other modalities, such as cryotherapeutic cooling, ultrasound energy (e.g., high intensity focused ultrasound ("HIFU") energy), microwave energy (e.g., via a microwave antenna), direct heating, high and/or low power laser energy, mechanical vibration, and/or optical power.

In some embodiments, the end effector 114 may include one or more sensors (not shown), such as one or more temperature sensors (e.g., thermocouples, thermistors, etc.), impedance sensors, and/or other sensors. The sensors and/or the electrodes may be connected to one or more wires extending through the shaft 116 and configured to transmit signals to and from the sensors and/or convey energy to the electrodes.

As shown, the device 102 is operatively coupled to the console 104 via a wired connection, such as cable 120. It should be noted, however, that the device 102 and console 104 may be operatively coupled to one another via a wireless connection. The console 104 is configured to provide various functions for the neuromodulation device 102, which may include,

but is not limited to, controlling, monitoring, supplying, and/or otherwise supporting operation of the neuromodulation device 102. For example, when the neuromodulation device 102 is configured for electrode-based, heat-element-based, and/or transducer-based treatment, the console 104 may include an energy generator 106 configured to generate RF energy (e.g., monopolar, bipolar, or multi-polar RF energy), pulsed electrical energy, microwave energy, optical energy, ultrasound energy (e.g., intraluminally-delivered ultrasound and/or HIFU), direct heat energy, radiation (e.g., infrared, visible, and/or gamma radiation), and/or another suitable type of energy.

In some embodiments, the console 104 may include a controller 107 communicatively coupled to the neuromodulation device 102. However, in the embodiments described herein, the controller 107 may generally be carried by and provided within the handle 118 of the neuromodulation device 102. The controller 107 is configured to initiate, terminate, and/or adjust operation of one or more electrodes provided by the end effector 114 directly and/or via the console 104. For example, the controller 107 can be configured to execute an automated control algorithm and/or to receive control instructions from an operator (e.g., surgeon or other medical professional or clinician). For example, the controller 107 and/or other components of the console 104 (e.g., processors, memory, etc.) can include a computer-readable medium carrying instructions, which when executed by the controller 107, causes the device 102 to perform certain functions (e.g., apply energy in a specific manner, detect impedance, detect temperature, detect nerve locations or anatomical structures, etc.). A memory includes one or more of various hardware devices for volatile and non-volatile storage, and can include both read-only and writable memory. For example, a memory can comprise random access memory (RAM), CPU registers, read-only memory (ROM), and writable non-volatile memory, such as flash memory, hard drives, floppy disks, CDs, DVDs, magnetic storage devices, tape drives, device buffers, and so forth. A memory is not a propagating signal divorced from underlying hardware; a memory is thus non-transitory.

The console 104 may further be configured to provide feedback to an operator before, during, and/or after a treatment procedure via evaluation/feedback algorithms 110. For example, the evaluation/feedback algorithms 110 can be configured to provide information associated with the temperature of the tissue at the treatment site, the location of nerves at the treatment site, and/or the effect of the therapeutic neuromodulation on the nerves at the treatment site. In

certain embodiments, the evaluation/feedback algorithm 110 can include features to confirm efficacy of the treatment and/or enhance the desired performance of the system 100. For example, the evaluation/feedback algorithm 110, in conjunction with the controller 107, can be configured to monitor temperature at the treatment site during therapy and automatically shut off the energy delivery when the temperature reaches a predetermined maximum (e.g., when applying RF energy) or predetermined minimum (e.g., when applying cryotherapy). In other embodiments, the evaluation/feedback algorithm 110, in conjunction with the controller 107, can be configured to automatically terminate treatment after a predetermined maximum time, a predetermined maximum impedance rise of the targeted tissue (i.e., in comparison to a baseline impedance measurement), a predetermined maximum impedance of the targeted tissue), and/or other threshold values for biomarkers associated with autonomic function. This and other information associated with the operation of the system 100 can be communicated to the operator via a graphical user interface (GUI) 112 provided via a display on the console 104 and/or a separate display (not shown) communicatively coupled to the console 104, such as a tablet or monitor. The GUI 112 may generally provide operational instructions for the procedure, such as directing the operator to select which nasal cavity to treat, indicating when the device 102 is primed and ready to perform treatment, and further providing status of therapy during the procedure, including indicating when the treatment is complete.

For example, in some embodiments, the end effector 114and/or other portions of the system 100 can be configured to detect various parameters of the heterogeneous tissue at the target site to determine the anatomy at the target site (e.g., tissue types, tissue locations, vasculature, bone structures, foramen, sinuses, etc.), locate nerves and/or other structures, and allow for neural mapping. For example, the end effector 114 may be configured to detect impedance, dielectric properties, temperature, and/or other properties that indicate the presence of neural fibers in the target region. As shown in FIG. 1, the console 104 may further include a monitoring system 108 configured to receive detected electrical and/or thermal measurements of tissue at the target site taken by the end effector 114, specifically sensed by appropriate sensors (e.g., temperature sensors and/or impedance sensors), and process this information to identify the presence of nerves, the location of nerves, and/or neural activity at the target site. The nerve monitoring system 108 can be operably coupled to the electrodes and/or other features of the end effector 102 via signal wires (e.g., copper wires) that extend through the cable 120 and through

the length of the shaft 116. In other embodiments, the end effector 114 can be communicatively coupled to the nerve monitoring system 108 using other suitable communication means.

The nerve monitoring system 108 can determine neural locations and activity before therapeutic neuromodulation to determine precise treatment regions corresponding to the positions of the desired nerves, during treatment to determine the effect of the therapeutic neuromodulation, and/or after treatment to evaluate whether the therapeutic neuromodulation treated the target nerves to a desired degree. This information can be used to make various determinations related to the nerves proximate to the target site, such as whether the target site is suitable for neuromodulation. In addition, the nerve monitoring system 108 can also compare the detected neural locations and/or activity before and after therapeutic neuromodulation, and compare the change in neural activity to a predetermined threshold to assess whether the application of therapeutic neuromodulation was effective across the treatment site. For example, the nerve monitoring system 108 can further determine electroneurogram (ENG) signals based on recordings of electrical activity of neurons taken by the end effector 114 before and after therapeutic neuromodulation. Statistically meaningful (e.g., measurable or noticeable) decreases in the ENG signal(s) taken after neuromodulation can serve as an indicator that the nerves were sufficiently ablated. Additional features and functions of the nerve monitoring system 108, as well as other functions of the various components of the console 104, including the evaluation/feedback algorithms 110 for providing real-time feedback capabilities for ensuring optimal therapy for a given treatment is administered, are described in at least U.S. Publication No. 2016/0331459 and U.S. Publication No. 2018/0133460, the contents of each of which are incorporated by reference herein in their entireties.

As will be described in greater detail herein, the neuromodulation device 102 provides access to target sites deep within the nasal region, such as at the immediate entrance of parasympathetic fibers into the nasal cavity to therapeutically modulate autonomic activity within the nasal cavity. In certain embodiments, for example, the neuromodulation device 102 can position the end effector 114 into contact with target sites within nasal cavity associated with postganglionic parasympathetic fibers that innervate the nasal mucosa.

FIG. 3A is a cut-away side view illustrating the anatomy of a lateral nasal wall and FIG. 3B is an enlarged side view of the nerves of the lateral nasal wall of FIG. 1A. The sphenopalatine foramen (SPF) is an opening or conduit defined by the palatine bone and the

sphenoid bone through which the sphenopalatine vessels and the posterior superior nasal nerves travel into the nasal cavity. More specifically, the orbital and sphenoidal processes of the perpendicular plate of the palatine bone define the sphenopalatine notch, which is converted into the SPF by the articulation with the surface of the body of the sphenoid bone.

The location of the SPF is highly variable within the posterior region of the lateral nasal cavity, which makes it difficult to visually locate the SPF. Typically, the SPF is located in the middle meatus (MM). However, anatomical variations also result in the SPF being located in the superior meatus (SM) or at the transition of the superior and middle meatuses. In certain individuals, for example, the inferior border of the SPF has been measured at about 19 mm above the horizontal plate of the palatine bone (i.e., the nasal sill), which is about 13 mm above the horizontal lamina of the inferior turbinate (IT) and the average distance from the nasal sill to the SPF is about 64.4 mm, resulting in an angle of approach from the nasal sill to the SPA of about 11.4°. However, studies to measure the precise location of the SPF are of limited practical application due to the wide variation of its location.

The anatomical variations of the SPF are expected to correspond to alterations of the autonomic and vascular pathways traversing into the nasal cavity. In general, it is thought that the posterior nasal nerves (also referred to as lateral posterior superior nasal nerves) branch from the pterygopalatine ganglion (PPG), which is also referred to as the sphenopalatine ganglion, through the SPF to enter the lateral nasal wall of the nasal cavity, and the sphenopalatine artery passes from the pterygopalatine fossa through the SPF on the lateral nasal wall. The sphenopalatine artery branches into two main portions: the posterior lateral nasal branch and the posterior septal branch. The main branch of the posterior lateral nasal artery travels inferiorly into the inferior turbinate IT (e.g., between about 1.0 mm and 1.5 mm from the posterior tip of the inferior turbinate IT), while another branch enters the middle turbinate MT and branches anteriorly and posteriorly.

Beyond the SPF, studies have shown that over 30% of human patients have one or more accessory foramen that also carries arteries and nerves into the nasal cavity. The accessory foramen are typically smaller than the SPF and positioned inferior to the SPF. For example, there can be one, two, three or more branches of the posterior nasal artery and posterior nasal nerves that extend through corresponding accessory foramen. The variability in location, size, and quantity associated with the accessory foramen and the associated branching arteries and

nerves that travel through the accessory foramen gives rise to a great deal of uncertainty regarding the positions of the vasculature and nerves of the sphenopalatine region. Furthermore, the natural anatomy extending from the SPF often includes deep inferior and/or superior grooves that carry neural and arterial pathways, which make it difficult to locate arterial and neural branches. For example the grooves can extend more than 5 mm long, more than 2 mm wide, and more than 1 mm deep, thereby creating a path significant enough to carry both arteries and nerves. The variations caused by the grooves and the accessory foramen in the sphenopalatine region make locating and accessing the arteries and nerves (positioned posterior to the arteries) extremely difficult for surgeons.

Recent microanatomic dissection of the pterygopalatine fossa (PPF) have further evidenced the highly variable anatomy of the region surrounding the SPF, showing that a multiplicity of efferent rami that project from the pterygopalatine ganglion (PPG) to innervate the orbit and nasal mucosa via numerous groups of small nerve fascicles, rather than an individual postganglionic autonomic nerves (e.g., the posterior nasal nerve). Studies have shown that at least 87% of humans have microforamina and micro rami in the palatine bone.

FIG. 3C, for example, is a front view of a left palatine bone illustrating geometry of microforamina and micro rami in a left palatine bone. In FIG. 3C, the solid regions represent nerves traversing directly through the palatine bone, and the open circles represent nerves that were associated with distinct microforamina. As such, FIG. 3C illustrates that a medial portion of the palatine bone can include at least 25 accessory posterolateral nerves.

The respiratory portion of the nasal cavity mucosa is composed of a type of ciliated pseudostratified columnar epithelium with a basement membrane. Nasal secretions (e.g., mucus) are secreted by goblet cells, submucosal glands, and transudate from plasma. Nasal seromucous glands and blood vessels are highly regulated by parasympathetic innervation deriving from the vidian and other nerves. Parasympathetic (cholinergic) stimulation through acetylcholine and vasoactive intestinal peptide generally results in mucus production. Accordingly, the parasympathetic innervation of the mucosa is primarily responsible submucosal gland activation/hyper activation, venous engorgement (e.g., congestion), and increased blood flow to the blood vessels lining the nose. Accordingly, severing or modulating the parasympathetic pathways that innervate the mucosa are expected to reduce or eliminate the hyper activation of

the submucosal glands and engorgement of vessels that cause symptoms associated with rhinosinusitis and other indications.

As previously described herein, postganglionic parasympathetic fibers that innervate the nasal mucosa (i.e., posterior superior nasal nerves) were thought to travel exclusively through the SPF as a sphenopalatine neurovascular bundle. The posterior nasal nerves are branches of the maxillary nerve that innervate the nasal cavity via a number of smaller medial and lateral branches extending through the mucosa of the superior and middle turbinates ST, MT (i.e., nasal conchae) and to the nasal septum. The nasopalatine nerve is generally the largest of the medial posterior superior nasal nerves, and it passes anteroinferiorly in a groove on the vomer to the floor of the nasal cavity. From here, the nasopalatine nerve passes through the incisive fossa of the hard palate and communicates with the greater palatine nerve to supply the mucosa of the hard palate. The posterior superior nasal nerves pass through the pterygopalatine ganglion PPG without synapsing and onto the maxillary nerve via its ganglionic branches.

Based on the understanding that the posterior nasal nerves exclusively traverse the SPF to innervate the nasal mucosa, surgeries have been performed to selectively sever the posterior nasal nerve as it exits the SPF. However, as discussed above, the sinonasal parasympathetic pathway actually comprises individual rami project from the pterygopalatine ganglion (PPG) to innervate the nasal mucosa via multiple small nerve fascicles (i.e., accessory posterolateral nerves), not a single branch extending through the SPF. These rami are transmitted through multiple fissures, accessory foramina, and microforamina throughout the palatine bone and may demonstrate anastomotic loops with both the SPF and other accessory nerves. Thus, if only the parasympathetic nerves traversing the SPF were severed, almost all patients (e.g., 90% of patients or more) would retain intact accessory secretomotor fibers to the posterolateral mucosa, which would result in the persistence of symptoms the neurectomy was meant to alieve.

Accordingly, embodiments of the present disclosure are configured to therapeutically modulate nerves at precise and focused treatment sites corresponding to the sites of rami extending through fissures, accessory foramina, and microforamina throughout the palatine bone (e.g., target region T shown in FIG. 3B). In certain embodiments, the targeted nerves are postganglionic parasympathetic nerves that go on to innervate the nasal mucosa. This selective neural treatment is also expected to decrease the rate of postoperative nasal crusting and dryness because it allows a clinician to titrate the degree of anterior denervation through judicious

sparing of the rami orbitonasal. Furthermore, embodiments of the present disclosure are also expected to maintain at least some sympathetic tone by preserving a portion of the sympathetic contributions from the deep petrosal nerve and internal maxillary periarterial plexus, leading to improved outcomes with respect to nasal obstruction. In addition, embodiments of the present disclosure are configured to target a multitude of parasympathetic neural entry locations (e.g., accessory foramen, fissures, and microforamina) to the nasal region to provide for a complete resection of all anastomotic loops, thereby reducing the rate of long-term re-innervation.

FIG. 4 is a side view of one embodiment of a handheld device 102 for providing therapeutic nasal neuromodulation consistent with the present disclosure. As illustrated, the device 102 includes a multi-segment end effector 114 transformable between a retracted configuration and an expanded deployed configuration, a shaft 116 operably associated with the end effector 114, and a handle 118 operably associated with the shaft 116. The multi-segment end effector 114 includes at least a first segment 122 and a second segment 124 spaced apart from one another. The first segment 122 is generally positioned closer to a distal end of the shaft 116, and is thus sometimes referred to herein as the proximal segment 122, while the second segment 124 is generally positioned further from the distal end of the shaft 116 and is thus sometimes referred to herein as the distal segment 124. Each of the first and second segments 122 and 124 is transformable between a retracted configuration, which includes a low-profile delivery state to facilitate intraluminal delivery of the end effector 114 to a treatment site within the nasal region, and a deployed configuration, which includes an expanded state, as shown in FIG. 4 and further illustrated in FIGS. 5A-5F. The handle 118 includes at least a first mechanism 126 for deployment of the multi-segment end effector 114, notably the first and second segments 122, 124, from the retracted configuration to the deployed configuration and a second mechanism 128, separate from the first mechanism 124, for control of energy output by either of the first and second segments 122, 124 of the end effector 114, specifically electrodes or other energy elements provided by first and/or second segments 122, 124. The handheld device 102 may further include an auxiliary line 121, which may provide a fluid connection between a fluid source, for example, and the shaft 116 such that fluid may be provided to a target site via the distal end of the shaft 116. In some embodiments, the auxiliary line 121 may provide a connection between a vacuum source and the shaft 116, such that the device 102 may include suction capabilities (via the distal end of the shaft 116).

FIGS. 5A, 5B, 5C, 5D, 5E, and 5F are enlarged views of the multi-segment end effector 114, illustrating various views of the first and second segments 122, 124 in greater detail. FIG. 5A is an enlarged, perspective view of the multi-segment end effector 114. FIG. 5B is an exploded, perspective view of the multi-segment end effector 114. FIGS. 5C and 5D are enlarged, top and side views, respectively, of the multi-segment end effector 114. FIG. 5E is an enlarged, front (proximal facing) view of the first segment 122 of the multi-segment end effector 114. FIG. 5F is an enlarged, front (proximal facing) view of the second segment 124 of the multi-segment end effector 114.

As illustrated, the first segment 122 includes at least a first set of flexible support elements, generally in the form of wires, arranged in a first configuration, and the second segment 124 includes a second set of flexible support elements, also in the form of wires, arranged in a second configuration. The first and second sets of flexible support elements include composite wires having conductive and elastic properties. For example, in some embodiments, the composite wires include a shape memory material, such as nitinol. The flexible support elements may further include a highly lubricious coating, which may allow for desirable electrical insulation properties as well as desirable low friction surface finish. Each of the first and second segments 122, 124 is transformable between a retracted configuration and an expanded deployed configuration such that the first and second sets of flexible support elements are configured to position one or more electrodes provided on the respective segments (see electrodes 136 in FIGS. 5E and 5F) into contact with one or more target sites when in the deployed configuration.

As shown, when in the expanded deployed configuration, the first set of support elements of the first segment 122 includes at least a first pair of struts 130a, 130b, each comprising a loop (or leaflet) shape and extending in an upward direction and a second pair of struts 132a, 132b, each comprising a loop (or leaflet) shape and extending in a downward direction, generally in an opposite direction relative to at least the first pair of struts 130a, 130b. It should be noted that the terms upward and downward are used to describe the orientation of the first and second segments 122, 124 relative to one another. More specifically, the first pair of struts 130a, 130b generally extend in an outward inclination in a first direction relative to a longitudinal axis of the multi-segment end effector 114 and are spaced apart from one another. Similarly, the second pair of struts 132a, 132b extend in an outward inclination in a second direction substantially

opposite the first direction relative to the longitudinal axis of the multi-segment end effector and spaced apart from one another.

The second set of support elements of the second segment 124, when in the expanded deployed configuration, includes a second set of struts 134(1), 134(2), 134(n) (approximately six struts), each comprising a loop shape extending outward to form an open-ended circumferential shape. As shown, the open-ended circumferential shape generally resembles a blooming flower, wherein each looped strut 134 may generally resemble a flower petal. It should be noted that the second set of struts 134 may include any number of individual struts and is not limited to six, as illustrated. For example, in some embodiments, the second segment 124 may include two, three, four, five, six, seven, eight, nine, ten, or more struts 134.

The first and second segments 122, 124, specifically struts 130, 132, and 134 include one or more energy delivery elements, such as a plurality of electrodes 136. It should be noted that any individual strut may include any number of electrodes 136 and is not limited to one electrode, as shown. In the expanded state, the struts 130, 132, and 134 can position any number of electrodes 136 against tissue at a target site within the nasal region (e.g., proximate to the palatine bone inferior to the SPF). The electrodes 136 can apply bipolar or multi-polar radiofrequency (RF) energy to the target site to therapeutically modulate postganglionic parasympathetic nerves that innervate the nasal mucosa proximate to the target site. In various embodiments, the electrodes 136 can be configured to apply pulsed RF energy with a desired duty cycle (e.g., 1 second on/0.5 seconds off) to regulate the temperature increase in the target tissue.

The first and second segments 122, 124 and the associated struts 130, 132, and 134 can have sufficient rigidity to support the electrodes 136 and position or press the electrodes 136 against tissue at the target site. In addition, each of the expanded first and second segments 122, 124 can press against surrounding anatomical structures proximate to the target site (e.g., the turbinates, the palatine bone, etc.) and the individual struts 130, 132, 134 can at least partially conform to the shape of the adjacent anatomical structures to anchor the end effector 114 In addition, the expansion and conformability of the struts 130, 132, 134 can facilitate placing the electrodes 136 in contact with the surrounding tissue at the target site. The electrodes 136 can be made from platinum, iridium, gold, silver, stainless steel, platinum-iridium, cobalt chromium, iridium oxide, polyethylenedioxythiophene (PEDOT), titanium, titanium nitride, carbon, carbon

nanotubes, platinum grey, Drawn Filled Tubing (DFT) with a silver core, and/or other suitable materials for delivery RF energy to target tissue. In some embodiments, such as illustrated in FIG. 6, a strut may include an outer jacket surrounding a conductive wire, wherein portions of the outer jacket are selectively absent along a length of the strut, thereby exposing the underlying conductive wire so as to act as an energy delivering element (i.e., an electrode) and/or sensing element, as described in greater detail herein.

In certain embodiments, each electrode 136 can be operated independently of the other electrodes 136. For example, each electrode can be individually activated and the polarity and amplitude of each electrode can be selected by an operator or a control algorithm (e.g., executed by the controller 107 previously described herein. The selective independent control of the electrodes 136 allows the end effector 114 to deliver RF energy to highly customized regions. For example, a select portion of the electrodes 136 can be activated to target neural fibers in a specific region while the other electrodes 136 remain inactive. In certain embodiments, for example, electrodes 136 may be activated across the portion of the second segment 124 that is adjacent to tissue at the target site, and the electrodes 136 that are not proximate to the target tissue can remain inactive to avoid applying energy to non-target tissue. Such configurations facilitate selective therapeutic modulation of nerves on the lateral nasal wall within one nostril without applying energy to structures in other portions of the nasal cavity.

The electrodes 136 are electrically coupled to an RF generator (e.g., the generator 106 of FIG. 1) via wires (not shown) that extend from the electrodes 136, through the shaft 116, and to the RF generator. When each of the electrodes 136 is independently controlled, each electrode 136 couples to a corresponding wire that extends through the shaft 116. In other embodiments, multiple electrodes 136 can be controlled together and, therefore, multiple electrodes 136 can be electrically coupled to the same wire extending through the shaft 116. As previously described, the RF generator and/or components operably coupled (e.g., a control module) thereto can include custom algorithms to control the activation of the electrodes 136. For example, the RF generator can deliver RF power at about 460-480 kHz (+ or - 5 kHz) to the electrodes 136, and do so while activating the electrodes 136 in a predetermined pattern selected based on the position of the end effector 114 relative to the treatment site and/or the identified locations of the target nerves. The RF generator is able to provide bipolar low power (10 watts with maximum

setting of 50 watts) RF energy delivery, and further provide multiplexing capabilities (across a maximum of 30 channels).

Once deployed, the first and second segments 122, 124 contact and conform to a shape of the respective locations, including conforming to and complementing shapes of one or more anatomical structures at the respective locations. In turn, the first and second segments 122, 124 become accurately positioned within the nasal cavity to subsequently deliver, via one or more electrodes 136, precise and focused application of RF thermal energy to the one or more target sites to thereby therapeutically modulate associated neural structures. More specifically, the first and second segments 122, 124 have shapes and sizes when in the expanded configuration that are specifically designed to place portions of the first and second segments 122, 124, and thus one or more electrodes associated therewith 136, into contact with target sites within nasal cavity associated with postganglionic parasympathetic fibers that innervate the nasal mucosa.

For example, the first set of flexible support elements of the first segment 122 conforms to and complements a shape of a first anatomical structure at the first location when the first segment 122 is in the deployed configuration and the second set of flexible support elements of the second segment 124 conforms to and complements a shape of a second anatomical structure at the second location when the second segment is in the deployed configuration. The first and second anatomical structures may include, but are not limited to, inferior turbinate, middle turbinate, superior turbinate, inferior meatus, middle meatus, superior meatus, pterygopalatine region, pterygopalatine fossa, sphenopalatine foramen, accessory sphenopalatine foramen(ae), and sphenopalatine micro-foramen(ae).

In some embodiments, the first segment 122 of the multi-segment end effector 114 is configured in a deployed configuration to fit around at least a portion of a middle turbinate at an anterior position relative to the middle turbinate and the second segment 124 of the multi-segment end effector is configured in a deployed configuration to contact a plurality of tissue locations in a cavity at a posterior position relative to the middle turbinate.

For example, the first set of flexible support elements of the first segment (i.e., struts 130 and 132) conforms to and complements a shape of a lateral attachment and posterior-inferior edge of the middle turbinate when the first segment 122 is in the deployed configuration and the second set of flexible support elements (i.e., struts 134) of the second segment 124 contact a plurality of tissue locations in a cavity at a posterior position relative to the lateral attachment

and posterior-inferior edge of middle turbinate when the second segment 124 is in the deployed configuration. Accordingly, when in the deployed configuration, the first and second segments 122, 124 are configured to position one or more associated electrodes 136 at one or more target sites relative to either of the middle turbinate and the plurality of tissue locations in the cavity behind the middle turbinate. In turn, electrodes 136 are configured to deliver RF energy at a level sufficient to therapeutically modulate postganglionic parasympathetic nerves innervating nasal mucosa at an innervation pathway within the nasal cavity of the patient.

As illustrated in FIG. 5E, the first segment 122 comprises a bilateral geometry. In particular, the first segment 122 includes two identical sides, including a first side formed of struts 130a, 132a and a second side formed of struts 130b, 132b. This bilateral geometry allows at least one of the two sides to conform to and accommodate an anatomical structure within the nasal cavity when the first segment 122 is in an expanded state. For example, when in the expanded state, the plurality of struts 130a, 132a contact multiple locations along multiple portions of the anatomical structure and electrodes provided by the struts are configured to emit energy at a level sufficient to create multiple micro-lesions in tissue of the anatomical structure that interrupt neural signals to mucus producing and/or mucosal engorgement elements. In particular, struts 130a, 132a conform to and complement a shape of a lateral attachment and posterior-inferior edge of the middle turbinate when the first segment 122 is in the deployed configuration, thereby allowing for both sides of the anatomical structure to receive energy from the electrodes. By having this independence between first and second side (i.e., right and left side) configurations, the first segment 122 is a true bilateral device. By providing a bilateral geometry, the multi-segment end effector 114 does not require a repeat use configuration to treat the other side of the anatomical structure, as both sides of the structure are accounted at the same time due to the bilateral geometry. The resultant micro-lesion pattern can be repeatable and is predictable in both macro element (depth, volume, shape parameter, surface area) and can be controlled to establish low to high effects of each, as well as micro elements (the thresholding of effects within the range of the macro envelope can be controlled), as well be described in greater detail herein. The systems of the present invention are further able to establish gradients within allowing for control over neural effects without having widespread effect to other cellular bodies, as will be described in greater detail herein.

FIG. 7 is a cross-sectional view of a portion of the shaft 116 of the handheld device taken along lines 7-7 of FIG. 4. As illustrated, the shaft 116 may be constructed from multiple components so as to have the ability to constrain the end effector 114 in the retracted configuration (i.e., the low-profile delivery state) when the end effector 114 is retracted within the shaft 116, and to further provide an atraumatic, low profile and durable means to deliver the end effector 114 to the target site. The shaft 116 includes coaxial tubes which travel from the handle 118 to a distal end of the shaft 116. The shaft 116 assembly is low profile to ensure trans-nasal delivery of therapy. The shaft 116 includes an outer sheath 138, surrounding a hypotube 140, which is further assembled over electrode wires 129 which surround an inner lumen 142. The outer sheath 138 serves as the interface between the anatomy and the device 102. The outer sheath 138 may generally include a low friction PTFE liner to minimize friction between the outer sheath 138 and the hypotube 140 during deployment and retraction. In particular, the outer sheath 138 may generally include an encapsulated braid along a length of the shaft 116 to provide flexibility while retaining kink resistance and further retaining column and/or tensile strength. For example, the outer sheath 138 may include a soft Pebax material, which is atraumatic and enables smooth delivery through the nasal passage. The outer sheath 138 may further include orientation/landmark markings on an exterior surface thereof, generally at the distal end, wherein the markings may provide a visual indication to an operator of the architecture and/or spatial orientation of first and/or second segments 122, 124 of the end effector 114 to assist in positioning and deployment of the end effector 114.

The hypotube 140 is assembled over the electrode wires starting within the handle 118 and travelling to the proximal end of the end effector 114. The hypotube 140 generally acts to protect the wires during delivery and is malleable to enable flexibility without kinking to thereby improve trackability. The hypotube 140 provides stiffness and enables torqueability of the device 102 to ensure accurate placement of the end effector 114. The hypotube 140 also provides a low friction exterior surface which enables low forces when the outer sheath 138 moves relative to the hypotube 140 during deployment and retraction or constraint. The shaft 116 may be pre-shaped in such a manner so as to complement the nasal cavity. For example, the hypotube 140 may be annealed to create a bent shaft 116 with a pre-set curve. The hypotube 140 may include a stainless-steel tubing, for example, which interfaces with a liner in the outer sheath 138 for low friction movement.

The inner lumen 142 may generally provide a channel for fluid extraction during a treatment procedure. For example, the inner lumen 142 extends from the distal end of the shaft 116 through the hypotube 140 and to atmosphere via a fluid line (line 121 of FIG. 4). The inner lumen 142 materials are chosen to resist forces of external components acting thereon during a procedure.

FIG. 7A is a side view of one embodiment of an elongate body and a multi-segment end effector extending from a distal end thereof, further illustrating a plurality of electrodes provided on separate respective portions of the elongate body. In the illustrated example, the elongate body may generally be in the form of the shaft 116, including one or more specific components of the shaft 116, as previously described herein. For example, the elongate body in the present example may include the outer sheath 138, such that one or more electrodes 137 are provided and positioned on separate respective portions of the outer sheath 138. FIG. 7B is a sectional view of the shaft 116 illustrating one embodiment in which a plurality of electrodes are embedded within the outer sheath 138. As further illustrated in FIG. 7B, the electrodes 137 may be provided along an entirety of the circumference of the outer sheath 138 (i.e., along substantially all sides of the outer sheath 138).

FIG. 7C is a sectional view of the shaft 116 illustrating another embodiment in which a plurality of electrodes 137 are provided on the hypotube 140 and associated portions of the outer sheath 138 are absent or removed to thereby expose the underlying electrodes 137 on the hypotube 140. FIG. 7D is a perspective view of a length of the shaft 116 illustrating exposed portions of the outer sheath 138 to reveal the underlying electrodes 137 provided on the hypotube 140. More specifically, portions of the outer sheath 138 may be selectively absent along a length thereof, thereby exposing any underlying electrodes 137 provided on the enclosed portion of the hypotube 140. Accordingly, in such an embodiment, the elongate body is in the form of the hypotube 140.

FIG. 7E is a sectional view of the shaft 116 illustrating another embodiment in which a plurality of electrodes 137 are provided on one or more support elements 129 extending through the hypotube 140, portions of which form the end effector 114. FIG. 7F is an enlarged, perspective view of the multi-segment end effector 114 extending from the shaft 116, specifically the hypotube 140 and illustrating the plurality of electrodes 137 provided on the support elements 129. For example, during deployment of the end effector 114 from the

retracted to expanded configurations, proximal portions of the support elements 129 that form the proximal and distal segments 122 and 124 may be further exposed to thereby further expose the electrodes 137 provided thereon. Accordingly, in such an embodiment, the elongate body is in the form of the assembly of support elements 129.

In some embodiments, respective portions of the elongate body may be transformable between a retracted configuration and an expanded configuration. For example, FIG. 7G is a cross-sectional view of the shaft 116, specifically the outer sheath 138, illustrating exemplary portions of the sheath 138 that may be retractable and expandable. When in the expanded configuration, each separate respective portion of the outer sheath 138 may be configured to position a separate associated one of the electrodes 137 into contact with a target tissue.

Similar to electrodes 136, the electrodes 137 may be configured to apply electromagnetic neuromodulation energy (e.g., radiofrequency (RF) energy) to target sites. In other embodiments, the electrodes 137 may be configured to provide therapeutic neuromodulation using various other modalities, such as cryotherapeutic cooling, ultrasound energy (e.g., high intensity focused ultrasound ("HIFU") energy), microwave energy (e.g., via a microwave antenna), direct heating, high and/or low power laser energy, mechanical vibration, and/or optical power. Yet still, in other embodiments, the electrodes can apply bipolar or multi-polar radiofrequency (RF) energy to a target site to therapeutically modulate tissue at the target site, which may include ablation of the tissue. For example, in various embodiments, the electrodes 136 can be configured to apply pulsed RF energy with a desired duty cycle (e.g., 1 second on/0.5 seconds off) to regulate the temperature increase in the target tissue.

In certain embodiments, each electrode 137 can be operated independently of the other electrodes 137. For example, each electrode can be individually activated and the polarity and amplitude of each electrode can be selected by an operator or a control algorithm (e.g., executed by the controller 107 previously described herein. The selective independent control of the electrodes 137 allows respective portions of the shaft to deliver RF energy to highly customized regions. For example, a select portion of the electrodes 137 can be activated to target tissue in a specific portion of the inferior turbinate while the other electrodes 137 remain inactive.

The electrodes 137 are electrically coupled to an RF generator (e.g., the generator 106 of FIG. 1) via wires (not shown) that extend from the electrodes 137, through the shaft 116, and to the RF generator. When each of the electrodes 137 is independently controlled, each electrode

137 couples to a corresponding wire that extends through the shaft 116. In other embodiments, multiple electrodes 137 can be controlled together and, therefore, multiple electrodes 137 can be electrically coupled to the same wire extending through the shaft 116. As previously described, the RF generator and/or components operably coupled (e.g., a control module) thereto can include custom algorithms to control the activation of the electrodes 137. For example, the RF generator can deliver RF power at about 460-480 kHz (+ or - 5 kHz) to the electrodes 137, and do so while activating the electrodes 137 in a predetermined pattern selected based on the position of the shaft 116 relative to the treatment site and/or the identified locations of the target tissue. The RF generator is able to provide bipolar low power (10 watts with maximum setting of 50 watts) RF energy delivery, and further provide multiplexing capabilities (across a maximum of 30 channels).

The electrodes 137 may be used to deliver energy to tissue adjacent to, or in contact with, such the respective portions of the shaft 116. For example, in some embodiments, the shaft 116 may generally reside with a portion of the nasal cavity proximate to the inferior turbinate upon advancing and deploying the multi-segment end effector 114 in the desired location (i.e., a target site associated with a sphenopalatine foramen within the nasal cavity of the patient). Accordingly, in addition to delivering energy from the electrodes 136 of the multi-segment end effector 114, the surgeon may also activate and deliver energy from electrodes 137 associated with a given component of the shaft 116 (i.e., outer sheath 138, hypotube 140, or assembly of support elements 129) to tissue associated with the inferior turbinate. Such energy may be delivered at a level sufficient to reduce engorgement of tissue associated with the inferior turbinate to thereby increase volumetric flow through the nasal passage of the patient and improve a patient's ability to breathe. For example, the energy may be delivered at a level sufficient to disrupt multiple neural signals to, or result in local hypoxia of, mucus producing and/or mucosal engorgement elements associated with the inferior turbinate. For example, delivery of energy may result in ablation of targeted tissue of the inferior turbinate. The ablation may be thermal ablation. The ablation may be caused by delivery of radiofrequency (RF) energy, for example.

Accordingly, in a given procedure, the surgeon may utilize the multi-segment end effector 114 to deliver energy (via electrodes 136) at a level sufficient to therapeutically modulate postganglionic parasympathetic nerves innervating nasal mucosa at microforamina of a

palatine bone of the patient and further utilize a component of the shaft 116 or other elongate body operably associated with the end effector 114 (i.e., outer sheath 138, hypotube 140, or assembly of support elements 129) to deliver energy (via electrodes 137) at a level sufficient to reduce engorgement of tissue associated with the inferior turbinate to thereby increase volumetric flow through the nasal passage of the patient. Such a combination of energy delivery to two specific targeted sites improves the manner in which at least one of rhinitis, congestion, and rhinorrhea are treated, thereby increasing the potential for reducing or completely eliminating symptoms associated therewith, including, but not limited to, coughing, sneezing, nasal or throat irritation and itching, and difficulty sleeping.

FIG. 8 is a side view of the handle 118. FIG. 9 is a side view of the handle 118 illustrating internal components enclosed within. The handle 118 generally includes an ergonomically-designed grip portion which provides ambidextrous use for both left and right handed use and conforms to hand anthropometrics to allow for at least one of an overhand grip style and an underhand grip style during use in a procedure. For example, the handle 118 may include specific contours, including recesses 144, 146, and 148 which are designed to naturally receive one or more of an operator's fingers in either of an overhand grip or underhand grip style and provide a comfortable feel for the operator. For example, in an underhand grip, recess 144 may naturally receive an operator's index finger, recess 146 may naturally receive an operator's middle finger, and recess 148 may naturally receive an operator's ring and little (pinkie or pinky) fingers which wrap around the proximal protrusion 150 and the operator's thumb naturally rests on a top portion of the handle 118 in a location adjacent to the first mechanism 126. In an overhand grip, the operator's index finger may naturally rest on the top portion of the handle 118, adjacent to the first mechanism 126, while recess 144 may naturally receive the operator's middle finger, recess 146 may naturally receive a portion of the operator's middle and/or ring fingers, and recess 148 may naturally receive and rest within the space (sometimes referred to as the purlicue) between the operator's thumb and index finger.

As previously described, the handle includes multiple user-operated mechanisms, including at least a first mechanism 126 for deployment of the end effector 114 from the retracted configuration to the expanded deployed configuration and a second mechanism 128 for controlling of energy output by the end effector, notably energy delivery from one or more electrodes 136. As shown, the user inputs for the first and second mechanisms 126, 128 are

positioned a sufficient distance to one another to allow for simultaneous one-handed operation of both user inputs during a procedure. For example, user input for the first mechanism 126 is positioned on a top portion of the handle 118 adjacent the grip portion and user input for the second mechanism 128 is positioned on side portions of the handle 118 adjacent the grip portion. As such, in an underhand grip style, the operator's thumb rests on the top portion of the handle adjacent to the first mechanism 126 and at least their middle finger is positioned adjacent to the second mechanism 128, each of the first and second mechanisms 126, 128 accessible and able to be actuated. In an overhand grip system, the operator's index finger rests on the top portion of the handle adjacent to the first mechanism 126 and at least their thumb is positioned adjacent to the second mechanism 128, each of the first and second mechanisms 126, 128 accessible and able to be actuated. Accordingly, the handle accommodates various styles of grip and provides a degree of comfort for the surgeon, thereby further improving execution of the procedure and overall outcome.

Referring to FIG. 9, the various components provided within the handle 118 are illustrated. As shown, the first mechanism 126 may generally include a rack and pinion assembly providing movement of the end effector 114 between the retracted and deployed configurations in response to input from a user-operated controller. The rack and pinion assembly generally includes a set of gears 152 for receiving input from the user-operated controller and converting the input to linear motion of a rack member 154 operably associated with at least one of the shaft 116 and the end effector 114. The rack and pinion assembly comprises a gearing ratio sufficient to balance a stroke length and retraction and deployment forces, thereby improving control over the deployment of the end effector. As shown, the rack member 154 may be coupled to a portion of the shaft 116, for example, such that movement of the rack member 154 in a direction towards a proximal end of the handle 118 results in corresponding movement of the shaft 116 while the end effector 114 remains stationary, thereby exposing the end effector 114 and allowing the end effector 114 to transition from the constrained, retracted configuration to the expanded, deployed configuration. Similarly, upon movement of the rack member 154 in a direction towards a distal end of the handle 118 results in corresponding movement of the shaft 116 while the end effector 114 remains stationary, thereby enclosing the end effector 114 within the shaft 116. It should be noted that, in other embodiments, the rack member 154 may be directly coupled to a portion of the end effector 114

such that movement of the rack member 154 results in corresponding movement of the end effector 114 while the shaft 116 remains stationary, thereby transitioning the end effector 114 between the retracted and deployed configurations.

The user-operated controller associated with the first mechanism 126 may include a slider mechanism operably associated with the rack and pinion rail assembly. Movement of the slider mechanism in a rearward direction towards a proximal end of the handle results in transitioning of the end effector 114 to the deployed configuration and movement of the slider mechanism in a forward direction towards a distal end of the handle results in transitioning of the end effector to the retracted configuration. In other embodiment, the user-operated controller associated with the first mechanism 126 may include a scroll wheel mechanism operably associated with the rack and pinion rail assembly. Rotation of the wheel in a rearward direction towards a proximal end of the handle results in transitioning of the end effector to the deployed configuration and rotation of the wheel in a forward direction towards a distal end of the handle results in transitioning of the end effector to the retracted configuration.

The user-operated controller associated with the first mechanism 126 may generally provide a high degree of precision and control over the deployment (and retraction) of the first and second segments 122, 124. For example, in some instances, the operator may wish to only deploy the second segment 124 during the procedure, while the first segment 122 remains in the retracted configuration. The user-operated controller allows for an operator to provide a sufficient degree of input (i.e., slide the slider mechanism or scroll the scroll wheel to a specific position) which results in only the second segment 124 transitioning from the retracted configuration to the deployed configuration (while the first segment 122 remains enclosed within the shaft 116 and in the retracted configuration). For example, in some embodiments, the end effector 114 may further include a detent feature, such as a catch or similar element, positioned between the first and second segments 122, 124 and configured to provide a surgeon with feedback, such as haptic or tactile feedback, during deployment of the end effector segments, alerting the surgeon when at least the second segment 124 is fully deployed. In particular, as the surgeon slides the slider mechanism or scrolls the scroll wheel during deployment of the second segment 124, the detect feature (provided between the first and second segments 122, 124) may then reach a portion of the shaft 116 and cause an increase in resistance on the slider mechanism or scroll wheel, thereby indicating to the surgeon that the second segment 124 has been deployed

and the first segment 122 remains in the retracted configuration. Accordingly, the surgeon can position and orient the second segment 124 as they desire without concern over the first segment 122 as it remains in the retracted configuration. In turn, one the second segment 124 is positioned at the desired target site, the surgeon may then deploy the first segment 122 to perform the procedure. Yet still, in some instances, only the second segment 124 may be used to perform a procedure (i.e., deliver energy to one or more target sites in contact with the second segment 124) and, as such, the first segment 122 may never be deployed.

The second mechanism 128 may generally include a user-operated controller configured to be actuated between at least an active position and an inactive position to thereby control delivery of energy from the end effector 114, notable delivery of energy from the electrodes 136. The user-operated controller may be multi-modal in that the user-operated controller may be actuated between multiple positions providing different functions/modes. For example, upon a single user input (i.e., single press of button associated within controller), the second mechanism may provide a baseline apposition / sensing check function prior to modulation. Upon pressing and holding the controller button for a pre-defined period of time, the energy output from the end effector may be activated. Further, upon double-tapping the controller button, energy output is deactivated.

Furthermore, the handle and/or the shaft may include markings that provide a surgeon with a spatial orientation of the end effector while the end effector is in a nasal cavity. FIG. 10 is a side view of the handle 118 illustrating multiple markings on a distal end of the handle 118 and FIG. 11 is a perspective view of a portion of the shaft 116 illustrating multiple markings on a distal end thereof. In particular, multiple markings may be provided on the handle and/or shaft and provide a visual indication of the spatial orientation of one or more portions of the first segment and second segment of the end effector when in the deployed configurations. The markings may include, for example, text, symbols, color-coding insignia, or the like. Thus, during initial placement of the end effector, when in a retracted configuration and enclosed within the shaft, a surgeon can rely on the markings on the handle and/or shaft as a visual indication of the spatial orientation of the end effector (e.g., linear, axial, and/or depth position) prior to deployment to thereby ensure that, once deployed, the end effector, including both the first and second segments, are positioned in the intended locations within the nasal cavity.

For example, the handle and/or shaft may include markings associated with each of the first pair of struts 130a, 130b and each of the second pair of struts 132a, 132b, so as to provide an operator with a visual indication as to the resulting spatial orientation and architecture of at least the first segment 122 when initially navigating the nasal cavity and delivering the distal end of the shaft 116 to a target site, prior to deployment of the end effector 114. In other words, the markings provide an operator with an indication of the orientation of at least the first segment 122 of the end effector 114 prior to deploying the end effector 114, thereby ensuring accurate positioning at the desired location.

FIG. 12 is a partial cut-away side view illustrating one approach for delivering an end effector 114 a target site within a nasal region in accordance with embodiments of the present disclosure. As shown, the distal portion of the shaft 116 extends into the nasal passage (NP), through the inferior meatus (IM) between the inferior turbinate (IT) and the nasal sill (NS), and around the posterior portion of the inferior turbinate (IT) where the end effector 114 is deployed at a treatment site. The treatment site can be located proximate to the access point or points of postganglionic parasympathetic nerves (e.g., branches of the posterior nasal nerve and/or other parasympathetic neural fibers that innervate the nasal mucosa) into the nasal cavity. In other embodiments, the target site can be elsewhere within the nasal cavity depending on the location of the target nerves.

In various embodiments, the distal portion of the shaft 116 may be guided into position at the target site via a guidewire (not shown) using an over-the-wire (OTW) or a rapid exchange (RX) technique. For example, the end effector 114 can include a channel for engaging the guidewire. Intraluminal delivery of the end effector 114 can include inserting the guide wire into an orifice in communication with the nasal cavity (e.g., the nasal passage or mouth), and moving the shaft 116 and/or the end effector 114 along the guide wire until the end effector 114 reaches a target site (e.g., inferior to the SPF).

Yet still, in further embodiments, the neuromodulation device 102 can be configured for delivery via a guide catheter or introducer sheath (not shown) with or without using a guide wire. The introducer sheath can first be inserted intraluminally to the target site in the nasal region, and the distal portion of the shaft 116 can then be inserted through the introducer sheath. At the target site, the end effector 114 can be deployed through a distal end opening of the introducer sheath or a side port of the introducer sheath. In certain embodiments, the introducer sheath can

include a straight portion and a pre-shaped portion with a fixed curve (e.g., a 5 mm curve, a 4 mm curve, a 3 mm curve, etc.) that can be deployed intraluminally to access the target site. In this embodiment, the introducer sheath may have a side port proximal to or along the pre-shaped curved portion through which the end effector 114 can be deployed. In other embodiments, the introducer sheath may be made from a rigid material, such as a metal material coated with an insulative or dielectric material. In this embodiment, the introducer sheath may be substantially straight and used to deliver the end effector 114 to the target site via a substantially straight pathway, such as through the middle meatus (MM) (FIG. 3A).

Image guidance may be used to aid the surgeon's positioning and manipulation of the distal portion of the shaft 116, as well as the deployment and manipulation of the end effector 114, specifically the first and second segments 122 thereof. For example, an endoscope 100 and/or other visualization device can be positioned to visualize the target site, the positioning of the end effector 114 at the target site, and/or the end effector 114 during therapeutic neuromodulation. The endoscope 100 may be delivered proximate to the target site by extending through the nasal passage NP and through the middle meatus MM between the inferior and middle turbinates IT and MT. From the visualization location within the middle meatus MM, the endoscope 100 can be used to visualize the treatment site, surrounding regions of the nasal anatomy, and the end effector 114.

In some embodiments, the distal portion of the shaft 116 may be delivered via a working channel extending through an endoscope, and therefore the endoscope can provide direct in-line visualization of the target site and the end effector 114. In other embodiments, an endoscope is incorporated with the end effector 114 and/or the distal portion of the shaft 116 to provide in-line visualization of the end effector 114 and/or the surrounding nasal anatomy. In other embodiments, image guidance can be provided with various other guidance modalities, such as image filtering in the infrared (IR) spectrum to visualize the vasculature and/or other anatomical structures, computed tomography (CT), fluoroscopy, ultrasound, optical coherence tomography (OCT), and/or combinations thereof. Yet still, in some embodiments, image guidance components may be integrated with the neuromodulation device 102 to provide image guidance during positioning of the end effector 114.

Once positioned at the target site, the therapeutic modulation may be applied via the one or more electrodes 136 and/or other features of the end effector 114 to precise, localized regions

of tissue to induce one or more desired therapeutic neuromodulating effects to disrupt parasympathetic motor sensory function. The end effector 114 can selectively target postganglionic parasympathetic fibers that innervate the nasal mucosa at a target or treatment site proximate to or at their entrance into the nasal region. For example, the end effector 114 can be positioned to apply therapeutic neuromodulation at least proximate to the SPF (FIG. 3A) to therapeutically modulate nerves entering the nasal region via the SPF. The end effector 114 can also be positioned to inferior to the SPF to apply therapeutic neuromodulation energy across accessory foramen and microforamina (e.g., in the palatine bone) through which smaller medial and lateral branches of the posterior superior lateral nasal nerve enter the nasal region. The purposeful application of the energy at the target site may achieve therapeutic neuromodulation along all or at least a portion of posterior nasal neural fibers entering the nasal region. The therapeutic neuromodulating effects are generally a function of, at least in part, power, time, and contact between the energy delivery elements and the adjacent tissue. For example, in certain embodiments therapeutic neuromodulation of autonomic neural fibers are produced by applying RF energy at a power of about 2-20 W (e.g., 5 W, 7 W, 10 W, etc.) for a time period of about 1-20 sections (e.g., 5-10 seconds, 8-10 seconds, 10-12 seconds, etc.).

The therapeutic neuromodulating effects may include partial or complete denervation via thermal ablation and/or non-ablative thermal alteration or damage (e.g., via sustained heating and/or resistive heating). Desired thermal heating effects may include raising the temperature of target neural fibers above a desired threshold to achieve non-ablative thermal alteration, or above a higher temperature to achieve ablative thermal alteration. For example, the target temperature may be above body temperature (e.g., approximately 37° C.) but less than about 90° C. (e.g., 70-75° C.) for non-ablative thermal alteration, or the target temperature may be about 100° C. or higher (e.g., 110° C., 120° C., etc.) for the ablative thermal alteration. Desired non-thermal neuromodulation effects may include altering the electrical signals transmitted in a nerve.

Sufficiently modulating at least a portion of the parasympathetic nerves is expected to slow or potentially block conduction of autonomic neural signals to the nasal mucosa to produce a prolonged or permanent reduction in nasal parasympathetic activity. This is expected to reduce or eliminate activation or hyperactivation of the submucosal glands and venous engorgement and, thereby, reduce or eliminate the symptoms of rhinosinusitis. Further, because the device 102 applies therapeutic neuromodulation to the multitude of branches of the posterior nasal

nerves rather than a single large branch of the posterior nasal nerve branch entering the nasal cavity at the SPF, the device 102 provides a more complete disruption of the parasympathetic neural pathway that affects the nasal mucosa and results in rhinosinusitis. Accordingly, the device 102 is expected to have enhanced therapeutic effects for the treatment of rhinosinusitis and reduced re-innervation of the treated mucosa.

In other embodiments, the device 102 can be configured to therapeutically modulate nerves and/or other structures to treat different indications. For example, the device 102 can be used to therapeutically modulate nerves that innervate the para-nasal sinuses to treat chronic sinusitis. In further embodiments, the system 100 and the device 102 disclosed herein can be configured therapeutically modulate the vasculature within the nasal anatomy to treat other indications, such as epistaxis (i.e., excessive bleeding from the nose). For example, the system 100 and the device 102 devices described herein can be used to apply therapeutically effective energy to arteries (e.g., the sphenopalatine artery and its branches) as they enter the nasal cavity (e.g., via the SPF, accessory foramen, etc.) to partially or completely coagulate or ligate the arteries. In other embodiments, the system 100 and the device 102 can be configured to partially or completely coagulate or ligate veins and/or other vessels. For such embodiments in which the end effector 114 ligates or coagulates the vasculature, the system 100 and device 102 would be modified to deliver energy at significantly higher power (e.g., about 100 W) and/or longer times (e.g., 1 minute or longer) than would be required for therapeutic neuromodulation.

As further illustrated in FIG. 12, the shaft 116 may reside with a portion of the nasal cavity proximate to the IT upon advancing and deploying the multi-segment end effector 114 in the desired location (i.e., a target site associated with a sphenopalatine foramen within the nasal cavity of the patient). Accordingly, in addition to delivering energy from the electrodes 136 of the multi-segment end effector 114, the surgeon may also activate and deliver energy from electrodes 137 associated with the shaft 116 ((i.e., outer sheath 138, hypotube 140, or assembly of support elements 129) to tissue associated with the IT. Such energy may be delivered at a level sufficient to reduce engorgement of tissue associated with the IT to thereby increase volumetric flow through a nasal passage of the patient and improve a patient's ability to breathe.

FIG. 13 is a flow diagram illustrating one embodiment of a method 400 for treating a condition within a nasal cavity of a patient. The method 400 includes advancing a multi-segment end effector within the nasal cavity of the patient (operation 410) wherein the multi-segment end

effector includes a first segment spaced apart from a second segment. The multi-segment end effector is retractable and expandable such that, once delivered to the one more target sites within the nasal cavity, the first and second segments can expand to a specific shape and/or size corresponding to anatomical structures within the nasal cavity and associated with the target sites. The method 400 further includes deploying the first and second segments at respective first and second locations within the nasal cavity (operation 420). In particular, each of the first and second flexible segments includes a specific geometry when in a deployed configuration to complement anatomy of respective locations within the nasal cavity. Accordingly, once deployed, the first and second segments contact and conform to a shape of the respective locations, including conforming to and complementing shapes of one or more anatomical structures at the respective locations. The method 400 further includes delivering energy, via the first and second segments, to tissue at one or more target sites with respect to the first and second locations (operation 430). In particular, the first and second segments become accurately positioned within the nasal cavity to subsequently deliver, via one or more electrodes, precise and focused application of RF thermal energy to the one or more target sites to thereby therapeutically modulate associated neural structures. The first and second segments have shapes and sizes when in the expanded configuration that are specifically designed to place portions of the first and second segments, and thus one or more electrodes associated therewith, into contact with target sites within nasal cavity associated with postganglionic parasympathetic fibers that innervate the nasal mucosa.

FIG. 14 is a flow diagram illustrating another embodiment of a method 500 for treating a condition within a nasal cavity of a patient. The method 500 includes providing a treatment device comprising an end effector transformable between a retracted configuration and an expanded deployed configuration, a shaft operably associated with the end effector, and a handle operably associated with the shaft (operation 510). The method 500 further includes advancing the end effector to one or more target sites within the nasal cavity of the patient (operation 520). The shaft may include a pre-defined shape (i.e., bent or angled at a specific orientation) so as to assist the operation for placement of the end effector at the target sites. The handle includes an ergonomically-designed grip portion which provides ambidextrous use for both left and right handed use and conforms to hand anthropometrics to allow for at least one of an overhand grip style and an underhand grip style during use in a procedure.

The handle and/or the shaft may include markings (e.g., text, symbols, color-coding insignia, etc.) that provide a surgeon with a spatial orientation of the end effector while the end effector is in a nasal cavity. In particular, multiple markings may be provided on the handle and/or shaft and provide a visual indication of the spatial orientation of one or more portions of the first segment and second segment of the end effector when in the deployed configurations. Thus, during initial placement of the end effector, when in a retracted configuration and enclosed within the shaft, a surgeon can rely on the markings on the handle and/or shaft as a visual indication of the spatial orientation of the end effector (e.g., linear, axial, and/or depth position) prior to deployment to thereby ensure that, once deployed, the end effector, including both the first and second segments, are positioned in the intended locations within the nasal cavity.

The method 500 further includes deploying the end effector at the one or more target sites (operation 530) and delivering energy from the end effector to tissue at the one or more target sites (operation 540). The handle includes multiple user-operated mechanisms, including at least a first mechanism for deployment of the end effector from the retracted configuration to the expanded deployed configuration and a second mechanism for controlling of energy output by the end effector. The user inputs for the first and second mechanisms are positioned a sufficient distance to one another to allow for simultaneous one-handed operation of both user inputs during a procedure. Accordingly, the handle accommodates various styles of grip and provides a degree of comfort for the surgeon, thereby further improving execution of the procedure and overall outcome.

FIG. 15 is a flow diagram illustrating another embodiment of a method 600 for treating a condition within a nasal cavity of a patient. The method 600 includes providing a treatment device comprising a multi-segment end effector, including a proximal segment that is spaced apart from a distal segment, and a visual marker (operation 610). As previously described herein, the visual marker may be provided by a shaft, for example, operably associated with the multi-segment end effector. The visual marker may be in the form of text, symbols, color-coding insignia, or the like, that generally provides a user (i.e., a surgeon or other medical professional) with a visual indication of a spatial orientation of one or more portions of the proximal segment while the multi-segment end effector is in a nasal cavity.

The method 600 further includes advancing, under image guidance, the proximal segment and the distal segment through a nasal cavity of a patient and past a middle turbinate (operation

620) and deploying the distal segment from a retracted configuration to an expanded configuration (operation 630). The image guidance may be in the form of an endoscope and/or other visualization device that can be positioned to so as to provide visualization to the user of one or more locations within the nasal cavity and to further provide visualization of the multi-segment end effector and other portions of the treatment device (i.e., at least a distal portion of the shaft with a visual marker) during advancement into the nasal cavity to assist the user in placement of the multi-segment end effector.

Upon deploying the distal segment to an expanded configuration, the method 600 further includes aligning, under the image guidance and with reference to the visual marker, the proximal segment with respect to the middle turbinate (operation 640). The visual marker may be provided on the shaft, for example, and provide a visual indication of the spatial orientation of one or more portions of the proximal segment when in the deployed configuration. For example, the deployed proximal segment may include a geometry to complement a shape of the middle turbinate. More specifically, the proximal segment may include a set of flexible support elements that conform to and complement a shape of the middle turbinate when the proximal segment is in the deployed expanded configuration. The visual marker, provided by the shaft, provides a visual indication of the spatial orientation of one or more portions of the proximal segment, including, for example, a spatial orientation of the set of flexible support elements when in a deployed expanded configuration. Accordingly, aligning the proximal segment with respect to the middle turbinate includes the user positioning, under the image guidance, the shaft and associated visual marker relative to the middle turbinate.

Thus, during initial placement of at least the proximal segment when it is in a retracted configuration, a surgeon can rely on the markings on the shaft as a visual indication of the spatial orientation (e.g., linear, axial, and/or depth position) of one or more portions of the proximal segment prior to its deployment, thereby ensuring that, once deployed, the proximal segment is positioned in the intended location within the nasal cavity.

The method 600 further includes deploying the proximal segment around the middle turbinate and advancing the deployed proximal segment toward the middle turbinate to establish contact and secure the proximal segment to the middle turbinate (operation 650). Again, the set of flexible support elements of the proximal segment are able to conform to and complement a shape of the middle turbinate when the proximal segment is in the deployed expanded

configuration, thereby ensuring that the deployed proximal segment is secured to the middle turbinate.

It should be noted that the treatment device further includes a handle operably associated with the multi-segment end effector and the shaft. The handle generally includes a controller mechanism for providing independent, controlled deployment of each of the proximal and distal segments from a retracted configuration to an expanded configuration within the nasal cavity. In particular, in some embodiments, the controller mechanism includes a rack and pinion assembly providing movement of the at least one of the proximal and distal segments between the retracted configuration and expanded configuration in response to user input from an associated user-operated controller. The rack and pinion assembly may include, for example, a set of gears for receiving user input from the user-operated controller and converting the user input to linear motion of a rack member operably associated with the multi-segment end effector.

The controller mechanism may further include a detent feature positioned relative to the proximal and distal segments and configured to provide active feedback to a user indicative of deployment of at least one of the proximal and distal segments. The active feedback may be in the form haptic feedback provided by the controller mechanism. For example, the haptic feedback may include an increase or decrease in resistance associated with user input with the controller mechanism for corresponding movement of the at least one of the proximal and distal segments between retracted and expanded configurations, and/or configurations therebetween (i.e., a plurality of configurations between a fully retracted configuration and a fully expanded configuration). For example, upon deploying the distal segment, the controller mechanism, as a result of interaction with the detent, may provide haptic feedback, in the form of a vibration or other motion (e.g., click(s) or change in resistance), to the user via the user-operated controller. The haptic feedback may indicate to the user that the distal segment is fully deployed and any further input with the user-operated controller will result in deployment of the proximal segment. The controller mechanism may further provide specific haptic feedback during deployment of a given segment, such as deployment of the proximal segment. For example, the haptic feedback may be in the form of an increase or decrease in resistance upon the user-operated controller, for example, which corresponds to the degree to which the proximal segment is deployed.

In some embodiments, the controller mechanism may further include a friction-based feature configured to provide stable movement of at least one of the proximal and distal

segments between the retracted and expanded configurations and further provide active feedback to a user indicative of deployment of at least one of the proximal and distal segments. The friction-based feature may include, for example, a lock mechanism configured to provide constant friction between one or more portions of the rack and pinion assembly sufficient to maintain a position of at least one of the proximal and distal segments during deployment thereof.

For example, the constant friction may be sufficient to hold either of the proximal or distal segments in a certain position as the segment transitions between retracted and expanded configurations regardless of whether the user maintains contact with the user-operated controller. In other words, a user does not need to maintain contact with the user-operated controller in order to ensure that the proximal or distal segment holds a certain position during deployment thereof. Rather, a user can simply interact with the user-operated controller to transition one of the proximal and distal segments to a desired configuration and the constant friction provided by the locking mechanism is sufficient to maintain the configuration of proximal or distal segment in the event that the user goes hands free (i.e., removes any contact with the user-operated controller). The constant friction is of a level sufficient to prevent undesired movement of the proximal or distal segments (i.e., unintended collapsing or expanding), while still allowing for a user to overcome such friction to move the proximal or distal segment to a desired configuration upon user input with the user-operated controller.

In some embodiments, the user-operated controller includes a slider mechanism operably associated with the rack and pinion rail assembly, wherein movement of the slider mechanism in a first direction results in transitioning of at least one of the proximal and distal segments to an expanded configuration and movement of the slider mechanism in a second opposite direction results in transitioning of at least one of the proximal and distal segments to the retracted configuration. In other embodiments, the user-operated controller includes a scroll wheel mechanism operably associated with the rack and pinion rail assembly, wherein rotation of the wheel in a first direction results in transitioning of at least one of the proximal and distal segments to an expanded configuration and rotation of the wheel in a second opposite direction results in transitioning of at least one of the proximal and distal segments to the retracted configuration. As such, during deployment of the proximal segment, the slider mechanism or

scroll wheel may provide increased resistance to a user as the user transitions the proximal segment from a fully retracted configuration to a fully deployed configuration.

Accordingly, during deployment of either of the distal and proximal segments, the controller mechanism provides active feedback to the user, wherein such active feedback can be indicative of which segment is being actively controlled and/or the extent of deployment of either of the distal or proximal segments, thereby improving user control over the deployment of either of the distal and proximal segments.

Upon securing the proximal segment to the middle turbinate, the method 600 further includes delivering energy, via the proximal segment, to the middle turbinate to treat a condition (operation 660). The condition may include, but is not limited to, allergic rhinitis, non-allergic rhinitis, chronic rhinitis, acute rhinitis, chronic sinusitis, acute sinusitis, chronic rhinosinusitis, acute rhinosinusitis, and medical resistant rhinitis, and a combination thereof. In some embodiments, delivering energy from the proximal segment includes delivering radiofrequency (RF) energy, via one or more electrodes provided by the proximal segment, to tissue of the middle turbinate at one or more target sites, wherein the one or more target sites are associated with parasympathetic nerve supply. In some embodiments, RF energy is delivered, via the one or more electrodes provided by the proximal segment, at a level sufficient to therapeutically modulate postganglionic parasympathetic nerves innervating nasal mucosa at an innervation pathway within the nasal cavity of the patient.

FIG. 16 is a flow diagram illustrating another embodiment of a method 700 for treating a condition within a nasal cavity of a patient. The method 700 includes providing a treatment device comprising an elongate body including one or more of a first set of electrodes provided along a length thereof and a retractable and expandable end effector operably associated with the elongate body and including one or more of a second set of electrodes provided thereon (operation 710).

The method 700 further includes advancing the shaft and end effector through a nasal passage and into a nasal cavity of a patient (operation 720) at which point a length of the elongate body is positioned at a first target site and the end effector is positioned at a second target site separate from the first target site (operation 730). For example, in some embodiments, the procedure may involve extending the elongate body into the nasal passage (NP), through the inferior meatus (IM) between the inferior turbinate (IT) and the nasal sill (NS). In other

embodiments, the procedure may involve extending the elongate body into the nasal passage (NP), through the middle meatus (MM) between the inferior turbinate (IT) and the middle turbinate (MT). In each instance, a proximal segment (of the end effector) is arranged in a deployed configuration to fit around at least a portion of a middle turbinate at an anterior position relative to a lateral attachment and a posterior-inferior edge of the middle turbinate and a separate distal segment (of the end effector) is configured in a deployed configuration to contact a plurality of tissue locations in a cavity at a posterior position relative to the lateral attachment and posterior-inferior edge of the middle turbinate. Additionally, the elongate body resides in a location adjacent to the inferior turbinate (IT).

The method 700 further includes delivering energy from the first and second sets of electrodes (associated with elongate body and end effector, respectively) to tissue at the first and second target sites, respectively (operation 740). In particular, a given procedure, the surgeon may utilize the multi-segment end effector to deliver energy (via electrodes) at a level sufficient to therapeutically modulate postganglionic parasympathetic nerves innervating nasal mucosa at microforamina of a palatine bone of the patient and further utilize the elongate body to deliver energy (via electrodes) at a level sufficient to reduce engorgement of tissue associated with the inferior turbinate to thereby increase volumetric flow through the nasal passage of the patient. Such a combination of energy delivery to two specific targeted sites improves the manner in which at least one of rhinitis, congestion, and rhinorrhea are treated, thereby increasing the potential for reducing or completely eliminating symptoms associated therewith, including, but not limited to, coughing, sneezing, nasal or throat irritation and itching, and difficulty sleeping.

Accordingly, the treatment device of the present invention recognizes the desire or need to treat larger areas within the nasal cavity or passage that are located outside of a treatment zone associated with the end effector. For example, when performing surgical procedures using current rhinitis treatment devices, the surgeon must reposition an end effector when attempting to treat multiple areas within the nasal cavity, particularly those areas that are located outside of any given treatment zone. The need to reposition the end effector multiple times during a given procedure can lead to inaccuracy when delivering energy, resulting in unintended collateral damage, and further increases the time in which it takes to complete a given procedure. The treatment device of the present invention recognizes and addresses this problem by providing an elongate body including one or more electrodes thereon, in addition to a multi-segment end

effector operably associated with the elongate body and including separate electrodes thereon. Accordingly, the elongate body serves to not only aid in positioning and delivering the end effector to a desired target site (to which the end effector may deliver energy), but the elongate body can also deliver energy to a target site that is separate and remote from the end effector. Such a design improves the efficiency with which a given procedure can be accomplished, particularly those procedures requiring treatment to multiple, separate areas within the nasal cavity or passage.

FIG. 17 is a flow diagram illustrating an embodiment of a method 800 for improving a patient's sleep by treating at least one of rhinitis, congestion, and rhinorrhea within a sino-nasal cavity of the patient. As previously described, the most common and impactful symptoms of rhinosinusitis include a runny nose, coughing, sneezing, nasal and/or throat irritation and itching, and overall general congestion of the nasal passage. As a result, sleep problems are very common in individuals suffering from rhinitis, as such symptoms impact a person's ability to either fall asleep or remain asleep for adequate periods of time. In addition, sleep problems are linked with fatigue and daytime sleepiness, as well as decreased productivity at work or school, impaired learning and memory, depression, and a reduced quality of life.

The method 800 includes delivering energy to one or more target sites within a sino-nasal cavity of the patient to disrupt multiple neural signals to, and/or result in local hypoxia of, mucus producing and/or mucosal engorgement elements, thereby reducing production of mucus and/or mucosal engorgement within a nose of the patient and reducing or eliminate one or more symptoms associated with at least one of rhinitis, congestion, and rhinorrhea to improve nasal breathability of the patient (operation 810). The one or more symptoms associated with at least one of rhinitis, congestion, and rhinorrhea are selected from the group consisting of nasal congestion, coughing, sneezing, and nasal or throat irritation and itching.

In some embodiments, the step of delivering energy results in ablation of targeted tissue at one or more locations to thereby disrupt the multiple neural signals to the mucus producing and/or mucosal engorgement elements within the nose. For example, the targeted tissue may be associated with one or more target sites proximate or inferior to a sphenopalatine foramen. The energy may be delivered at a level sufficient to therapeutically modulate postganglionic parasympathetic nerves innervating nasal mucosa at foramina and or microforamina of a palatine

bone of the patient. As a result, the energy delivered may cause multiple points of interruption of neural branches extending through foramina and microforamina of palatine bone.

Additionally, or alternatively, the step of delivering energy may result in ablation of targeted tissue at one or more locations to thereby result in local hypoxia of the mucus producing and/or mucosal engorgement elements within the nose. For example, in some embodiments, the ablation of targeted tissue may cause thrombus formation within one or more blood vessels associated with mucus producing and/or mucosal engorgement elements within the nose. As such, the resulting local hypoxia of the mucus producing and/or mucosal engorgement elements may result in decreased mucosal engorgement to thereby increase volumetric flow through a nasal passage of the patient.

It should be noted that the ablation may include thermal ablation, which may be in the form of cyro-ablation, for example. In other embodiments, the ablation may be caused by delivery of radiofrequency (RF) energy.

In some embodiments, the ablation may be caused by a treatment device comprising a handle, an elongate body extending therefrom, and a retractable and expandable end effector operably associated with the elongate body. Accordingly, during a procedure, the method may include advancing the end effector into the sino-nasal cavity and positioning the end effector at a target site(s). The handle may generally control transformation of the end effector from a retracted state to an expanded state. The end effector may include a plurality of energy delivery elements provided thereon, such as electrodes, for example.

When in the expanded state, the end effector may generally position one or more of the plurality of energy delivery elements relative to the one or more target sites. In some embodiments, the end effector includes a proximal segment that is spaced apart from a separate distal segment. In some embodiments, the proximal segment may include a first set of flexible support elements arranged in a deployed configuration to fit around at least a portion of a middle turbinate at an anterior position relative to a lateral attachment and a posterior-inferior edge of the middle turbinate and position one or more energy delivery elements into contact with one or more respective tissue locations associated with the middle turbinate and the distal segment may include a second set of flexible support elements configured in a deployed configuration to position one or more energy delivery elements into contact with one or more respective tissue

locations in a cavity at a posterior position relative to the lateral attachment and posterior-inferior edge of the middle turbinate.

In some embodiments, the elongate body may include a shaft to which the end effector is coupled. The shaft includes an outer sheath surrounding a hypotube or metallic member, wherein at least one of the outer sheath and hypotube and metallic member includes the one or more energy delivering elements provided thereon. Yet still, in other embodiments, the elongate body may include one or more of a plurality of support elements forming at least a portion of the end effector. The energy delivering elements of the elongate body may be configured to deliver energy at one or more target sites associated with an inferior or middle turbinate within the sino-nasal cavity of the patient at a level sufficient to reduce engorgement of tissue associated therewith to thereby increase volumetric flow through a nasal passage of the patient.

Neuromodulation Monitoring, Feedback, and Mapping Capabilities

As previously described, the system 100 includes a console 104 to which the device 102 is to be connected. The console 104 is configured to provide various functions for the neuromodulation device 102, which may include, but is not limited to, controlling, monitoring, supplying, and/or otherwise supporting operation of the neuromodulation device 102. The console 104 can further be configured to generate a selected form and/or magnitude of energy for delivery to tissue or nerves at the target site via the end effector 114, and therefore the console 104 may have different configurations depending on the treatment modality of the device 102. For example, when device 102 is configured for electrode-based, heat-element-based, and/or transducer-based treatment, the console 104 includes an energy generator 106 configured to generate RF energy (e.g., monopolar, bipolar, or multi-polar RF energy), pulsed electrical energy, microwave energy, optical energy, ultrasound energy (e.g., intraluminally-delivered ultrasound and/or HIFU), direct heat energy, radiation (e.g., infrared, visible, and/or gamma radiation), and/or another suitable type of energy. When the device 102 is configured for cryotherapeutic treatment, the console 104 can include a refrigerant reservoir (not shown), and can be configured to supply the device 102 with refrigerant. Similarly, when the device 102 is configured for chemical-based treatment (e.g., drug infusion), the console 104 can include a

chemical reservoir (not shown) and can be configured to supply the device 102 with one or more chemicals.

In some embodiments, the console 104 may include a controller 107 communicatively coupled to the neuromodulation device 102. However, in the embodiments described herein, the controller 107 may generally be carried by and provided within the handle 118 of the neuromodulation device 102. The controller 107 is configured to initiate, terminate, and/or adjust operation of one or more electrodes provided by the end effector 114 directly and/or via the console 104. For example, the controller 107 can be configured to execute an automated control algorithm and/or to receive control instructions from an operator (e.g., surgeon or other medical professional or clinician). For example, the controller 107 and/or other components of the console 104 (e.g., processors, memory, etc.) can include a computer-readable medium carrying instructions, which when executed by the controller 107, causes the device 102 to perform certain functions (e.g., apply energy in a specific manner, detect impedance, detect temperature, detect nerve locations or anatomical structures, perform nerve mapping, etc.). A memory includes one or more of various hardware devices for volatile and non-volatile storage, and can include both read-only and writable memory. For example, a memory can comprise random access memory (RAM), CPU registers, read-only memory (ROM), and writable non-volatile memory, such as flash memory, hard drives, floppy disks, CDs, DVDs, magnetic storage devices, tape drives, device buffers, and so forth. A memory is not a propagating signal divorced from underlying hardware; a memory is thus non-transitory.

The console 104 may further be configured to provide feedback to an operator before, during, and/or after a treatment procedure via mapping/evaluation/feedback algorithms 110. For example, the mapping/evaluation/feedback algorithms 110 can be configured to provide information associated with the location of nerves at the treatment site, the location of other anatomical structures (e.g., vessels) at the treatment site, the temperature at the treatment site during monitoring and modulation, and/or the effect of the therapeutic neuromodulation on the nerves at the treatment site. In certain embodiments, the mapping/evaluation/feedback algorithm 110 can include features to confirm efficacy of the treatment and/or enhance the desired performance of the system 100. For example, the mapping/evaluation/feedback algorithm 110, in conjunction with the controller 107 and the end effector 114, can be configured to monitor neural activity and/or temperature at the treatment site during therapy and automatically shut off

the energy delivery when the neural activity and/or temperature reaches a predetermined threshold (e.g., a threshold reduction in neural activity, a threshold maximum temperature when applying RF energy, or a threshold minimum temperature when applying cryotherapy). In other embodiments, the mapping/evaluation/feedback algorithm 110, in conjunction with the controller 107, can be configured to automatically terminate treatment after a predetermined maximum time, a predetermined maximum impedance or resistance rise of the targeted tissue (i.e., in comparison to a baseline impedance measurement), a predetermined maximum impedance of the targeted tissue), and/or other threshold values for biomarkers associated with autonomic function. This and other information associated with the operation of the system 100 can be communicated to the operator via a display 112 (e.g., a monitor, touchscreen, user interface, etc.) on the console 104 and/or a separate display (not shown) communicatively coupled to the console 104.

In various embodiments, the end effector 114 and/or other portions of the system 100 can be configured to detect various bioelectric-parameters of the tissue at the target site, and this information can be used by the mapping/evaluation/feedback algorithms 110 to determine the anatomy at the target site (e.g., tissue types, tissue locations, vasculature, bone structures, foramen, sinuses, etc.), locate neural structures, differentiate between different types of neural structures, map the anatomical and/or neural structure at the target site, and/or identify neuromodulation patterns of the end effector 114 with respect to the patient's anatomy. For example, the end effector 114 can be used to detect resistance, complex electrical impedance, dielectric properties, temperature, and/or other properties that indicate the presence of neural fibers and/or other anatomical structures in the target region. In certain embodiments, the end effector 114, together with the mapping/evaluation/feedback algorithms 110, can be used to determine resistance (rather than impedance) of the tissue (i.e., the load) to more accurately identify the characteristics of the tissue. The mapping/evaluation/feedback algorithms 110 can determine resistance of the tissue by detecting the actual power and current of the load (e.g., via the electrodes 136).

In some embodiments, the system 100 provides resistance measurements with a high degree of accuracy and a very high degree of precision, such as precision measurements to the hundredths of an Ohm (e.g., 0.01Ω) for the range of 1-50Ω. The high degree of resistance detection accuracy provided by the system 100 allows for the detection sub-microscale

structures, including the firing of neural structures, differences between neural structures and other anatomical structures (e.g., blood vessels), and event different types of neural structures. This information can be analyzed by the mapping/evaluation/feedback algorithms and/or the controller 107 and communicated to the operator via a high resolution spatial grid (e.g., on the display 112) and/or other type of display to identify neural structures and other anatomy at the treatment site and/or indicate predicted neuromodulation regions based on the ablation pattern with respect to the mapped anatomy.

As previously described, in certain embodiments, each electrode 136 can be operated independently of the other electrodes 136. For example, each electrode can be individually activated and the polarity and amplitude of each electrode can be selected by an operator or a control algorithm executed by the controller 107. The selective independent control of the electrodes 136 allows the end effector 114 to detect information and deliver RF energy to highly customized regions. For example, a select portion of the electrodes 136 can be activated to target specific neural fibers in a specific region while the other electrodes 136 remain inactive. In certain embodiments, for example, electrodes 136 may be activated across the portion of the second segment 124 that is adjacent to tissue at the target site, and the electrodes 136 that are not proximate to the target tissue can remain inactive to avoid applying energy to non-target tissue. In addition, the electrodes 136 can be individually activated to stimulate or therapeutically modulate certain regions in a specific pattern at different times (e.g., via multiplexing), which facilitates detection of anatomical parameters across a zone of interest and/or regulated therapeutic neuromodulation.

The electrodes 136 can be electrically coupled to the energy generator 106 via wires (not shown) that extend from the electrodes 136, through the shaft 116, and to the energy generator 106. When each of the electrodes 136 is independently controlled, each electrode 136 couples to a corresponding wire that extends through the shaft 116. This allows each electrode 136 to be independently activated for stimulation or neuromodulation to provide precise ablation patterns and/or individually detected via the console 104 to provide information specific to each electrode 136 for neural or anatomical detection and mapping. In other embodiments, multiple electrodes 136 can be controlled together and, therefore, multiple electrodes 136 can be electrically coupled to the same wire extending through the shaft 116. The energy generator 16 and/or components (e.g., a control module) operably coupled thereto can include custom algorithms to control the

activation of the electrodes 136. For example, the RF generator can deliver RF power at about 200-100 W to the electrodes 136, and do so while activating the electrodes 136 in a predetermined pattern selected based on the position of the end effector 114 relative to the treatment site and/or the identified locations of the target nerves. In other embodiments, the energy generator 106 delivers power at lower levels (e.g., less than 1 W, 1-5 W, 5-15 W, 15-50 W, 50-150 W, etc.) for stimulation and/or higher power levels. For example, the energy generator 106 can be configured to delivery stimulating energy pulses of 1-3 W via the electrodes 136 to stimulate specific targets in the tissue.

As previously described, the end effector 114 can further include one or more temperature sensors disposed on the flexible first and second segments 122, 124 and/or other portions of the end effector 114 and electrically coupled to the console 104 via wires (not shown) that extend through the shaft 116. In various embodiments, the temperature sensors can be positioned proximate to the electrodes 136 to detect the temperature at the interface between tissue at the target site and the electrodes 136. In other embodiments, the temperature sensors can penetrate the tissue at the target site (e.g., a penetrating thermocouple) to detect the temperature at a depth within the tissue. The temperature measurements can provide the operator or the system with feedback regarding the effect of the therapeutic neuromodulation on the tissue. For example, in certain embodiments the operator may wish to prevent or reduce damage to the tissue at the treatment site (e.g., the nasal mucosa), and therefore the temperature sensors can be used to determine if the tissue temperature reaches a predetermined threshold for irreversible tissue damage. Once the threshold is reached, the application of therapeutic neuromodulation energy can be terminated to allow the tissue to remain intact and avoid significant tissue sloughing during wound healing. In certain embodiments, the energy delivery can automatically terminate based on the mapping/evaluation/feedback algorithm 110 stored on the console 104 operably coupled to the temperature sensors.

In certain embodiments, the system 100 can determine the locations and/or morphology of neural structures and/or other anatomical structures before therapy such that the therapeutic neuromodulation can be applied to precise regions including target neural structures, while avoiding negative effects on non-target structures, such as blood vessels. As described in further detail below, the system 100 can detect various bioelectrical parameters in an interest zone (e.g., within in the nasal cavity) to determine the location and morphology of various neural structures

(e.g., different types of neural structures, neuronal directionality, etc.) and/or other tissue (e.g., glandular structures, vessels, bony regions, etc.). In some embodiments, the system 100 is configured to measure bioelectric potential. To do so, one or more of the electrodes 136 is placed in contact with an epithelial surface at a region of interest (e.g., a treatment site). Electrical stimuli (e.g., constant or pulsed currents at one or more frequencies) are applied to the tissue by one or more electrodes 136 at or near the treatment site, and the voltage and/or current differences at various different frequencies between various pairs of electrodes 136 of the end effector 114 may be measured to produce a spectral profile or map of the detected bioelectric potential, which can be used to identify different types of tissues (e.g., vessels, neural structures, and/or other types of tissue) in the region of interest. For example, current (i.e., direct or alternating current) can be applied to a pair of electrodes 136 adjacent to each other and the resultant voltages and/or currents between other pairs of adjacent electrodes 136 are measured. It will be appreciated that the current injection electrodes 136 and measurement electrodes 136 need not be adjacent, and that modifying the spacing between the two current injection electrodes 136 can affect the depth of the recorded signals. For example, closely-spaced current injection electrodes 136 provided recorded signals associated with tissue deeper from the surface of the tissue than further spaced apart current injection electrodes 136 that provide recorded signals associated with tissue at shallower depths. Recordings from electrode pairs with different spacings may be merged to provide additional information on depth and localization of anatomical structures.

Further, complex impedance and/or resistance measurements of the tissue at the region of interest can be detected directly from current-voltage data provided by the bioelectric potential measurements while differing levels of frequency currents are applied to the tissue (e.g., via the end effector 114), and this information can be used to map the neural and anatomical structures by the use of frequency differentiation reconstruction. Applying the stimuli at different frequencies will target different stratified layers or cellular bodies or clusters. At high signal frequencies (e.g., electrical injection or stimulation), for example, cell membranes of the neural structures do not impede current flow, and the current passes directly through the cell membranes. In this case, the resultant measurement (e.g., impedance, resistance, capacitance, and/or induction) is a function of the intracellular and extracellular tissue and liquids. At low signal frequencies, the membranes impede current flow to provide different defining

characteristics of the tissues, such as the shapes of the cells or cell spacing. The stimulation frequencies can be in the megahertz range, in the kilohertz range (e.g., 400-500 kHz, 450-480 kHz, etc.), and/or other frequencies attuned to the tissue being stimulated and the characteristics of the device being used. The detected complex impedance or resistances levels from the zone of interest can be displayed to the user (e.g., via the display 112) to visualize certain structures based on the stimulus frequency.

Further, the inherent morphology and composition of the anatomical structures in the nasal region react differently to different frequencies and, therefore, specific frequencies can be selected to identify very specific structures. For example, the morphology or composition of targeted structures for anatomical mapping may depend on whether the cells of tissue or other structure are membranonic, stratified, and/or annular. In various embodiments, the applied stimulation signals can have predetermined frequencies attuned to specific neural structures, such as the level of myelination and/or morphology of the myelination. For example, second axonal parasympathetic structures are poorly myelinated than sympathetic nerves or other structures and, therefore, will have a distinguishable response (e.g., complex impedance, resistance, etc.) with respect to a selected frequency than sympathetic nerves. Accordingly, applying signals with different frequencies to the target site can distinguish the targeted parasympathetic nerves from the non-targeted sensory nerves, and therefore provide highly specific target sites for neural mapping before or after therapy and/or neural evaluation post-therapy. In some embodiments, the neural and/or anatomical mapping includes measuring data at a region of interest with at least two different frequencies to identify certain anatomical structures such that the measurements are taken first based on a response to an injection signal having a first frequency and then again based on an injection signal having a second frequency different from the first. For example, there are two frequencies at which hypertrophied (i.e., disease-state characteristics) sub-mucosal targets have a different electrical conductivity or permittivity compared to “normal” (i.e., healthy) tissue. Complex conductivity may be determined based on one or more measured physiological parameters (e.g., complex impedance, resistance, dielectric measurements, dipole measurements, etc.) and/or observance of one or more confidently known attributes or signatures. Furthermore, the system 100 can also apply neuromodulation energy via the electrodes 136 at one or more predetermined frequencies attuned to a target neural structure to provide highly targeted ablation of the selected neural structure associated with the

frequency(ies). This highly targeted neuromodulation also reduces the collateral effects of neuromodulation therapy to non-target sites/structures (e.g., blood vessels) because the targeted signal (having a frequency tuned to a target neural structure) will not have the same modulating effects on the non-target structures.

Accordingly, bioelectric properties, such as complex impedance and resistance, can be used by the system 100 before, during, and/or after neuromodulation therapy to guide one or more treatment parameters. For example, before, during, and/or after treatment, impedance or resistance measurements may be used to confirm and/or detect contact between one or more electrodes 136 and the adjacent tissue. The impedance or resistance measurements can also be used to detect whether the electrodes 136 are placed appropriately with respect to the targeted tissue type by determining whether the recorded spectra have a shape consistent with the expected tissue types and/or whether serially collected spectra were reproducible. In some embodiments, impedance or resistance measurements may be used to identify a boundary for the treatment zone (e.g., specific neural structures that are to be disrupted), anatomical landmarks, anatomical structures to avoid (e.g., vascular structures or neural structures that should not be disrupted), and other aspects of delivering energy to tissue.

The bioelectric information can be used to produce a spectral profile or map of the different anatomical features tissues at the target site, and the anatomical mapping can be visualized in a 3D or 2D image via the display 112 and/or other user interface to guide the selection of a suitable treatment site. This neural and anatomical mapping allows the system 100 to accurately detect and therapeutically modulate the postganglionic parasympathetic neural fibers that innervate the mucosa at the numerous neural entrance points into the nasal cavity. Further, because there are not any clear anatomical markers denoting the location of the SPF, accessory foramen, and microforamina, the neural mapping allows the operator to identify and therapeutically modulate nerves that would otherwise be unidentifiable without intricate dissection of the mucosa. In addition, anatomical mapping also allows the clinician to identify certain structures that the clinician may wish to avoid during therapeutic neural modulation (e.g., certain arteries). The neural and anatomical bioelectric properties detected by the system 100 can also be used during and after treatment to determine the real-time effect of the therapeutic neuromodulation on the treatment site. For example, the mapping/evaluation/feedback algorithms 110 can also compare the detected neural locations and/or activity before and after

therapeutic neuromodulation, and compare the change in neural activity to a predetermined threshold to assess whether the application of therapeutic neuromodulation was effective across the treatment site.

In various embodiments, the system 100 can also be configured to map the expected therapeutic modulation patterns of the electrodes 136 at specific temperatures and, in certain embodiments, take into account tissue properties based on the anatomical mapping of the target site. For example, the system 100 can be configured to map the ablation pattern of a specific electrode ablation pattern at the 45° C. isotherm, the 55° C. isotherm, the 65° C. isotherm, and/or other temperature/ranges (e.g., temperatures ranging from 45° C. to 70° C. or higher) depending on the target site and/or structure.

The system 100 may provide, via the display 112, three-dimensional views of such projected ablation patterns of the electrodes 136 of the end effector 114. The ablation pattern mapping may define a region of influence that each electrode 136 has on the surrounding tissue. The region of influence may correspond to the region of tissue that would be exposed to therapeutically modulating energy based on a defined electrode activation pattern (i.e., one, two, three, four, or more electrodes on any given strut of the first and second segments 122, 124). In other words, the ablation pattern mapping can be used to illustrate the ablation pattern of any number of electrodes 136, any geometry of the electrode layout, and/or any ablation activation protocol (e.g., pulsed activation, multi-polar/sequential activation, etc.).

In some embodiments, the ablation pattern may be configured such that each electrode 136 has a region of influence surrounding only the individual electrode 136 (i.e., a "dot" pattern). In other embodiments, the ablation pattern may be such that two or more electrodes 136 may link together to form a sub-grouped regions of influence that define peanut-like or linear shapes between two or more electrodes 136. In further embodiments, the ablation pattern can result in a more expansive or contiguous pattern in which the region of influence extends along multiple electrodes 136 (e.g., along each strut). In still further embodiments, the ablation pattern may result in different regions of influence depending upon the electrode activation pattern, phase angle, target temperature, pulse duration, device structure, and/or other treatment parameters. The three-dimensional views of the ablation patterns can be output to the display 112 and/or other user interfaces to allow the clinician to visualize the changing regions of influence based on different durations of energy application, different electrode activation sequences (e.g.,

multiplexing), different pulse sequences, different temperature isotherms, and/or other treatment parameters. This information can be used to determine the appropriate ablation algorithm for a patient's specific anatomy. In other embodiments, the three-dimensional visualization of the regions of influence can be used to illustrate the regions from which the electrodes 136 detect data when measuring bioelectrical properties for anatomical mapping. In this embodiment, the three dimensional visualization can be used to determine which electrode activation pattern should be used to determine the desired properties (e.g., impedance, resistance, etc.) in the desired area. In certain embodiments, it may be better to use dot assessments, whereas in other embodiments it may be more appropriate to detect information from linear or larger contiguous regions.

In some embodiments, the mapped ablation pattern is superimposed on the anatomical mapping to identify what structures (e.g., neural structures, vessels, etc.) will be therapeutically modulated or otherwise affected by the therapy. An image may be provided to the surgeon which includes a digital illustration of a predicted or planned neuromodulation zone in relation to previously identified anatomical structures in a zone of interest. For example, the illustration may show numerous neural structures and, based on the predicted neuromodulation zone, identifies which neural structures are expected to be therapeutically modulated. The expected therapeutically modulated neural structures may be shaded to differentiate them from the non-affected neural structures. In other embodiments, the expected therapeutically modulated neural structures can be differentiated from the non-affected neural structures using different colors and/or other indicators. In further embodiments, the predicted neuromodulation zone and surrounding anatomy (based on anatomical mapping) can be shown in a three dimensional view (and/or include different visualization features (e.g., color-coding to identify certain anatomical structures, bioelectric properties of the target tissue, etc.). The combined predicted ablation pattern and anatomical mapping can be output to the display 112 and/or other user interfaces to allow the clinician to select the appropriate ablation algorithm for a patient's specific anatomy.

The imaging provided by the system 100 allows the clinician to visualize the ablation pattern before therapy and adjust the ablation pattern to target specific anatomical structures while avoiding others to prevent collateral effects. For example, the clinician can select a treatment pattern to avoid blood vessels, thereby reducing exposure of the vessel to the therapeutic neuromodulation energy. This reduces the risk of damaging or rupturing vessels and,

therefore, prevents immediate or latent bleeding. Further, the selective energy application provided by the neural mapping reduces collateral effects of the therapeutic neuromodulation, such as tissue sloughing off during wound healing (e.g., 1-3 weeks post ablation), thereby reducing the aspiration risk associated with the neuromodulation procedure.

The system 100 can be further configured to apply neuromodulation energy (via the electrodes 136) at specific frequencies attuned to the target neural structure and, therefore, specifically target desired neural structures over non-target structures. For example, the specific neuromodulation frequencies can correspond to the frequencies identified as corresponding to the target structure during neural mapping. As described above, the inherent morphology and composition of the anatomical structures react differently to different frequencies. Thus, frequency-tuned neuromodulation energy tailored to a target structure does not have the same modulating effects on non-target structures. More specifically, applying the neuromodulation energy at the target-specific frequency causes ionic agitation in the target neural structure, leading to differentials in osmotic potentials of the targeted neural structures and dynamic changes in neuronal membronic potentials (resulting from the difference in intra-cellular and extra-cellular fluidic pressure). This causes degeneration, possibly resulting in vacuolar degeneration and, eventually, necrosis at the target neural structure, but is not expected to functionally affect at least some non-target structures (e.g., blood vessels). Accordingly, the system 100 can use the neural-structure specific frequencies to both (1) identify the locations of target neural structures to plan electrode ablation configurations (e.g., electrode geometry and/or activation pattern) that specifically focus the neuromodulation on the target neural structure; and (2) apply the neuromodulation energy at the characteristic neural frequencies to selectively ablate the neural structures responsive to the characteristic neural frequencies. For example, the end effector 114 of the system 100 may selectively stimulate and/or modulate parasympathetic fibers, sympathetic fibers, sensory fibers, alpha/beta/delta fibers, C-fibers, anoxic terminals of one or more of the foregoing, insulated over non-insulated fibers (regions with fibers), and/or other neural structures. In some embodiments, the system 100 may also selectively target specific cells or cellular regions during anatomical mapping and/or therapeutic modulation, such as smooth muscle cells, sub-mucosal glands, goblet cells, stratified cellular regions within the nasal mucosa. Therefore, the system 100 provides highly selective neuromodulation therapy specific

to targeted neural structures, and reduces the collateral effects of neuromodulation therapy to non-target structures (e.g., blood vessels).

The present disclosure provides a method of anatomical mapping and therapeutic neuromodulation. The method includes expanding an end effector (i.e., end effector 114) at a zone of interest ("interest zone"), such as in a portion of the nasal cavity. For example, the end effector 114 can be expanded such that at least some of the electrodes 136 are placed in contact with mucosal tissue at the interest zone. The expanded device can then take bioelectric measurements via the electrodes 136 and/or other sensors to ensure that the desired electrodes are in proper contact with the tissue at the interest zone. In some embodiments, for example, the system 100 detects the impedance and/or resistance across pairs of the electrodes 136 to confirm that the desired electrodes have appropriate surface contact with the tissue and that all of the electrodes are 136 functioning properly.

The method continues by optionally applying an electrical stimulus to the tissue, and detecting bioelectric properties of the tissue to establish baseline norms of the tissue. For example, the method can include measuring resistance, complex impedance, current, voltage, nerve firing rate, neuromagnetic field, muscular activation, and/or other parameters that are indicative of the location and/or function of neural structures and/or other anatomical structures (e.g., glandular structures, blood vessels, etc.). In some embodiments, the electrodes 136 send one or more stimulation signals (e.g., pulsed signals or constant signals) to the interest zone to stimulate neural activity and initiate action potentials. The stimulation signal can have a frequency attuned to a specific target structure (e.g., a specific neural structure, a glandular structure, a vessel) that allows for identification of the location of the specific target structure. The specific frequency of the stimulation signal is a function of the host permeability and, therefore, applying the unique frequency alters the tissue attenuation and the depth into the tissue the RF energy will penetrate. For example, lower frequencies typically penetrate deeper into the tissue than higher frequencies.

Pairs of the non-stimulating electrodes 136 of the end effector 114 can then detect one or more bioelectric properties of the tissue that occur in response to the stimulus, such as impedance or resistance. For example, an array of electrodes (e.g., the electrodes 136) can be selectively paired together in a desired pattern (e.g., multiplexing the electrodes 136) to detect the bioelectric properties at desired depths and/or across desired regions to provide a high level of

spatial awareness at the interest zone. In certain embodiments, the electrodes 136 can be paired together in a time-sequenced manner according to an algorithm (e.g., provided by the mapping/evaluation/feedback algorithms 110). In various embodiments, stimuli can be injected into the tissue at two or more different frequencies, and the resultant bioelectric responses (e.g., action potentials) in response to each of the injected frequencies can be detected via various pairs of the electrodes 136. For example, an anatomical or neural mapping algorithm can cause the end effector 114 to deliver pulsed RF energy at specific frequencies between different pairs of the electrodes 136 and the resultant bioelectric response can be recorded in a time sequenced rotation until the desired interest zone is adequately mapped (i.e., "multiplexing"). For example, the end effector 114 can deliver stimulation energy at a first frequency via adjacent pairs of the electrodes 136 for a predetermined time period (e.g., 1-50 milliseconds), and the resultant bioelectric activity (e.g., resistance) can be detected via one or more other pairs of electrodes 136 (e.g., spaced apart from each other to reach varying depths within the tissue). The end effector 114 can then apply stimulation energy at a second frequency different from the first frequency, and the resultant bioelectric activity can be detected via the other electrodes. This can continue when the interest zone has been adequately mapped at the desired frequencies. As described in further detail below, in some embodiments the baseline tissue bioelectric properties (e.g., nerve firing rate) are detected using static detection methods (without the injection of a stimulation signal).

After detecting the baseline bioelectric properties, the information can be used to map anatomical structures and/or functions at the interest zone. For example, the bioelectric properties detected by the electrodes 136 can be amazed via the mapping/evaluation/feedback algorithms 110, and an anatomical map can be output to a user via the display 112. In some embodiments, complex impedance, dielectric, or resistance measurements can be used to map parasympathetic nerves and, optionally, identify neural structures in a diseased state of hyperactivity. The bioelectric properties can also be used to map other non-target structures and the general anatomy, such as blood vessels, bone, and/or glandular structures. The anatomical locations can be provided to a user (e.g., on the display 112) as a two-dimensional map (e.g., illustrating relative intensities, illustrating specific sites of potential target structures) and/or as a three-dimensional image. This information can be used to differentiate structures on a submicron, cellular level and identify very specific target structures (e.g., hyperactive

parasympathetic nerves). The method can also predict the ablation patterns of the end effector 114 based on different electrode neuromodulation protocol and, optionally, superimpose the predicted neuromodulation patterns onto the mapped anatomy to indicate to the user which anatomical structures will be affected by a specific neuromodulation protocol. For example, when the predicted neuromodulation pattern is displayed in relation to the mapped anatomy, a clinician can determine whether target structures will be appropriately ablated and whether non-target structures (e.g., blood vessels) will be undesirably exposed to the therapeutic neuromodulation energy. Thus, the method can be used for planning neuromodulation therapy to locate very specific target structures, avoid non-target structures, and select electrode neuromodulation protocols.

Once the target structure is located and a desired electrode neuromodulation protocol has been selected, the method continues by applying therapeutic neuromodulation to the target structure. The neuromodulation energy can be applied to the tissue in a highly targeted manner that forms micro-lesions to selectively modulate the target structure, while avoiding non-targeted blood vessels and allowing the surrounding tissue structure to remain healthy for effective wound healing. In some embodiments, the neuromodulation energy can be applied in a pulsed manner, allowing the tissue to cool between modulation pulses to ensure appropriate modulation without undesirably affecting non-target tissue. In some embodiments, the neuromodulation algorithm can deliver pulsed RF energy between different pairs of the electrodes 136 in a time sequenced rotation until neuromodulation is predicted to be complete (i.e., "multiplexing"). For example, the end effector 114 can deliver neuromodulation energy (e.g., having a power of 5-10 W (e.g., 7 W, 8 W, 9 W) and a current of about 50-100 mA) via adjacent pairs of the electrodes 136 until at least one of the following conditions is met: (a) load resistance reaches a predefined maximum resistance (e.g., 350Ω); (b) a thermocouple temperature associated with the electrode pair reaches a predefined maximum temperature (e.g., 80° C.); or (c) a predetermined time period has elapsed (e.g., 10 seconds). After the predetermined conditions are met, the end effector 114 can move to the next pair of electrodes in the sequence, and the neuromodulation algorithm can terminate when all of the load resistances of the individual pairs of electrodes is at or above a predetermined threshold (e.g., 100Ω). In various embodiments, the RF energy can be applied at a predetermined frequency (e.g., 450-500 kHz) and is expected to initiate ionic

agitation of the specific target structure, while avoiding functional disruption of non-target structures.

During and/or after neuromodulation therapy, the method continues by detecting and, optionally, mapping the post-therapy bioelectric properties of the target site. This can be performed in a similar manner as described above. The post-therapy evaluation can indicate if the target structures (e.g., hyperactive parasympathetic nerves) were adequately modulated or ablated. If the target structures are not adequately modulated (i.e., if neural activity is still detected in the target structure and/or the neural activity has not decreased), the method can continue by again applying therapeutic neuromodulation to the target. If the target structures were adequately ablated, the neuromodulation procedure can be completed.

Detection of Anatomical Structures and Function

Various embodiments of the present technology can include features that measure bio-electric, dielectric, and/or other properties of tissue at target sites to determine the presence, location, and/or activity of neural structures and other anatomical structures and, optionally, map the locations of the detected neural structures and/or other anatomical structures. For example, the present technology can be used to detect glandular structures and, optionally, their mucoserous functions and/or other functions. The present technology can also be configured to detect vascular structures (e.g., arteries) and, optionally, their arterial functions, volumetric pressures, and/or other functions. The mapping features discussed below can be incorporated into any the system 100 and/or any other devices disclosed herein to provide an accurate depiction of nerves at the target site.

Neural and/or anatomical detection can occur (a) before the application of a therapeutic neuromodulation energy to determine the presence or location of neural structures and other anatomical structures (e.g., blood vessels, glands, etc.) at the target site and/or record baseline levels of neural activity; (b) during therapeutic neuromodulation to determine the real-time effect of the energy application on the neural fibers at the treatment site; and/or (c) after therapeutic neuromodulation to confirm the efficacy of the treatment on the targeted structures (e.g., nerves glands, etc.). This allows for the identification of very specific anatomical structures (even to the micro-scale or cellular level) and, therefore, provides for highly targeted neuromodulation. This

enhances the efficacy and efficiency of the neuromodulation therapy. In addition, the anatomical mapping reduces the collateral effects of neuromodulation therapy to non-target sites. Accordingly, the targeted neuromodulation inhibits damage or rupture of blood vessels (i.e., inhibits undesired bleeding) and collateral damage to tissue that may be of concern during wound healing (e.g., when damage tissue sloughs off of the wall of the nasal wall).

In certain embodiments, the systems disclosed herein can use bioelectric measurements, such as impedance, resistance, voltage, current density, and/or other parameters (e.g., temperature) to determine the anatomy, in particular the neural, glandular, and vascular anatomy, at the target site. The bioelectric properties can be detected after the transmission of a stimulus (e.g., an electrical stimulus, such as RF energy delivered via the electrodes 136; i.e., "dynamic" detection) and/or without the transmission of a stimulus (i.e., "static" detection).

Dynamic measurements include various embodiments to excite and/or detect primary or secondary effects of neural activation and/or propagation. Such dynamic embodiments involve the heightened states of neural activation and propagation and use this dynamic measurement for nerve location and functional identification relative to the neighboring tissue types. For example, a method of dynamic detection can include: (1) delivering stimulation energy to a treatment site via a treatment device (e.g., the end effector 114) to excite parasympathetic nerves at the treatment site; (2) measuring one or more physiological parameters (e.g., resistance, impedance, etc.) at the treatment site via a measuring/sensing array of the treatment device (e.g., the electrodes 136); (4) based on the measurements, identifying the relative presence and position of parasympathetic nerves at the treatment site; and (5) delivering ablation energy to the identified parasympathetic nerves to block the detected para-sympathetic nerves.

Static measurements include various embodiments associated with specific native properties of the stratified or cellular composition at or near the treatment site. The static embodiments are directed to inherent biologic and electrical properties of tissue types at or near the treatment site, the stratified or cellular compositions at or near the treatment site, and contrasting both foregoing measurements with tissue types adjacent the treatment site (and that are not targeted for neuromodulation). This information can be used to localize specific targets (e.g., parasympathetic fibers) and non-targets (e.g., vessels, sensory nerves, etc.). For example, a method of static detection can include: (1) before ablation, utilizing a measuring/sensing array of a treatment device (e.g., the electrodes 136) to determine one or more baseline physiological

parameters; (2) geometrically identifying inherent tissue properties within a region of interest based on the measured physiological parameters (e.g., resistance, impedance, etc.); (3) delivering ablation energy to one or more nerves within the region of via treatment device interest; (4) during the delivery of the ablation energy, determining one or more mid-procedure physiological parameters via the measuring/sensing array; and (5) after the delivery of ablation energy, determining one or more post-procedure physiological parameters via the measurement/sensing array to determine the effectiveness of the delivery of the ablation energy on blocking the nerves that received the ablation energy.

After the initial static and/or dynamic detection of bioelectric properties, the location of anatomical features can be used to determine where the treatment site(s) should be with respect to various anatomical structures for therapeutically effective neuromodulation of the targeted parasympathetic nasal nerves. The bioelectric and other physiological properties described herein can be detected via electrodes (e.g., the electrodes 136 of the end effector 114), and the electrode pairings on a device (e.g., end effector 114) can be selected to obtain the bioelectric data at specific zones or regions and at specific depths of the targeted regions. The specific properties detected at or surrounding target neuromodulation sites and associated methods for obtaining these properties are described below. These specific detection and mapping methods discussed below are described with reference to the system 100 , although the methods can be implemented on other suitable systems and devices that provide for anatomical identification, anatomical mapping and/or neuromodulation therapy.

Neural Identification and Mapping

In many neuromodulation procedures, it is beneficial to identify the portions of the nerves that fall within a zone and/or region of influence (referred to as the “interest zone”) of the energy delivered by a neuromodulation device 102, as well as the relative three-dimensional position of the neural structures relative to the neuromodulation device 102. Characterizing the portions of the neural structures within the interest zone and/or determining the relative positions of the neural structures within the interest zone enables the clinician to (1) selectively activate target neural structures over non-target structures (e.g., blood vessels), and (2) sub-select specific targeted neural structures (e.g., parasympathetic nerves) over non-target neural structures (e.g.,

sensory nerves, subgroups of neural structures, neural structures having certain compositions or morphologies). The target structures (e.g., parasympathetic nerves) and non-target structures (e.g., blood vessels, sensory nerves, etc.) can be identified based on the inherent signatures of specific structures, which are defined by the unique morphological compositions of the structures and the bioelectrical properties associated with these morphological compositions. For example, unique, discrete frequencies can be associated with morphological compositions and, therefore, be used to identify certain structures. The target and non-target structures can also be identified based on relative bioelectrical activation of the structures to sub-select specific neuronal structures. Further, target and non-target structures can be identified by the differing detected responses of the structures to a tailored injected stimuli. For example, the systems described herein can detect the magnitude of response of structures and the difference in the responses of anatomical structures with respect to differing stimuli (e.g., stimuli injected at different frequencies).

At least for purposes of this disclosure, a nerve can include the following portions that are defined based on their respective orientations relative to the interest zone: terminating neural structures (e.g., terminating axonal structures), branching neural structures (e.g., branching axonal structures), and travelling neural structures (e.g., travelling axonal structures). For example, terminating neural structures enter the zone but do not exit. As such, terminating neural structures are terminal points for neuronal signaling and activation. Branching neural structures are nerves that enter the interest zone and increase number of nerves exiting the interest zone. Branching neural structures are typically associated with a reduction in relative geometry of nerve bundle. Travelling neural structures are nerves that enter the interest zone and exit the zone with no substantially no change in geometry or numerical value.

The system 100 can be used to detect voltage, current, complex impedance, resistance, permittivity, and/or conductivity, which are tied to the compound action potentials of nerves, to determine and/or map the relative positions and proportionalities of nerves in the interest zone. Neuronal cross-sectional area ("CSA") is expected to be due to the increase in axonic structures. Each axon is a standard size. Larger nerves (in cross-sectional dimension) have a larger number of axons than nerves having smaller cross-sectional dimensions. The compound action responses from the larger nerves, in both static and dynamic assessments, are greater than smaller nerves. This is at least in part because the compound action potential is the cumulative

action response from each of the axons. When using static analysis, for example, the system 100 can directly measure and map impedance or resistance of nerves and, based on the determined impedance or resistance, determine the location of nerves and/or relative size of the nerves. In dynamic analysis, the system 100 can be used to apply a stimulus to the interest zone and detect the dynamic response of the neural structures to the stimulus. Using this information, the system 100 can determine and/or map impedance or resistance in the interest zone to provide information related to the neural positions or relative nerve sizes. Neural impedance mapping can be illustrated by showing the varying complex impedance levels at a specific location at differing cross-sectional depths. In other embodiments, neural impedance or resistance can be mapped in a three-dimensional display.

Identifying the portions and/or relative positions of the nerves within the interest zone can inform and/or guide selection of one or more treatment parameters (e.g., electrode ablation patterns, electrode activation plans, etc.) of the system 100 for improving treatment efficiency and efficacy. For example, during neural monitoring and mapping, the system 100 can identify the directionality of the nerves based at least in part on the length of the neural structure extending along the interest zone, relative sizing of the neural structures, and/or the direction of the action potentials. This information can then be used by the system 100 or the clinician to automatically or manually adjust treatment parameters (e.g., selective electrode activation, bipolar and/or multipolar activation, and/or electrode positioning) to target specific nerves or regions of nerves. For example, the system 100 can selectively activate specific electrodes 136, electrode combinations (e.g., asymmetric or symmetric), and/or adjust the bi-polar or multi-polar electrode configuration. In some embodiments, the system 100 can adjust or select the waveform, phase angle, and/or other energy delivery parameters based on the nerve portion/position mapping and/or the nerve proportionality mapping. In some embodiments, structure and/or properties of the electrodes 136 themselves (e.g., material, surface roughening, coatings, cross-sectional area, perimeter, penetrating, penetration depth, surface-mounted, etc.) may be selected based on the nerve portion and proportionality mapping.

In various embodiments, treatment parameters and/or energy delivery parameters can be adjusted to target on-axis or near axis travelling neural structures and/or avoid the activation of traveling neural structures that are at least generally perpendicular to the end effector 114. Greater portions of the on-axis or near axis travelling neural structures are exposed and

susceptible to the neuromodulation energy provided by the end effector 114 than a perpendicular travelling neural structure, which may only be exposed to therapeutic energy at a discrete cross-section. Therefore, the end effector 114 is more likely to have a greater effect on the on-axis or near axis travelling neural structures. The identification of the neural structure positions (e.g., via complex impedance or resistance mapping) can also allow targeted energy delivery to travelling neural structures rather than branching neural structures (typically downstream of the travelling neural structures) because the travelling neural structures are closer to the nerve origin and, therefore, more of the nerve is affected by therapeutic neuromodulation, thereby resulting in a more efficient treatment and/or a higher efficacy of treatment. Similarly, the identification of neural structure positions can be used to target travelling and branching neural structures over terminal neural structures. In some embodiments, the treatment parameters can be adjusted based on the detected neural positions to provide a selective regional effect. For example, a clinician can target downstream portions of the neural structures if only wanting to influence partial effects on very specific anatomical structures or positions.

In various embodiments, neural locations and/or relative positions of nerves can be determined by detecting the nerve-firing voltage and/or current over time. An array of the electrodes 136 can be positioned in contact with tissue at the interest zone, and the electrodes 136 can measure the voltage and/or current associated with nerve-firing. This information can optionally be mapped (e.g., on a display 112) to identify the location of nerves in a hyper state (i.e., excessive parasympathetic tone). Rhinitis is at least in part the result of over-firing nerves because this hyper state drives the hyper-mucosal production and hyper-mucosal secretion. Therefore, detection of nerve firing rate via voltage and current measurements can be used to locate the portions of the interest region that include hyper-parasympathetic neural function (i.e., nerves in the diseased state). This allows the clinician to locate specific nerves (i.e., nerves with excessive parasympathetic tone) before neuromodulation therapy, rather than simply targeting all parasympathetic nerves (including non-diseased state parasympathetic nerves) to ensure that the correct tissue is treated during neuromodulation therapy. Further, nerve firing rate can be detected during or after neuromodulation therapy so that the clinician can monitor changes in nerve firing rate to validate treatment efficacy. For example, recording decreases or elimination of nerve firing rate after neuromodulation therapy can indicate that the therapy was effective in therapeutically treating the hyper/diseased nerves.

In various embodiments, the system 100 can detect neural activity using dynamic activation by injecting a stimulus signal (i.e., a signal that temporarily activates nerves) via one or more of the electrodes 136 to induce an action potential, and other pairs of electrodes 136 can detect bioelectric properties of the neural response. Detecting neural structures using dynamic activation involves detecting the locations of action potentials within the interest zone by measuring the discharge rate in neurons and the associated processes. The ability to numerically measure, profile, map, and/or image fast neuronal depolarization for generating an accurate index of activity is a factor in measuring the rate of discharge in neurons and their processes. The action potential causes a rapid increase in the voltage across nerve fiber and the electrical impulse then spreads along the fiber. As an action potential occurs, the conductance of a neural cell membrane changes, becoming about 40 times larger than it is when the cell is at rest. During the action potential or neuronal depolarization, the membrane resistance diminishes by about 80 times, thereby allowing an applied current to enter the intracellular space as well. Over a population of neurons, this leads to a net decrease in the resistance during coherent neuronal activity, such as chronic para-sympathetic responses, as the intracellular space will provide additional conductive ions. The magnitude of such fast changes has been estimated to have local resistivity changes with recording near DC is 2.8-3.7% for peripheral nerve bundles (e.g., including the nerves in the nasal cavity).

Detecting neural structures using dynamic activation includes detecting the locations of action potentials within the interest zone by measuring the discharge rate in neurons and the associated processes. The basis of each this discharge is the action potential, during which there is a depolarization of the neuronal membrane of up to 110 mV or more, lasting approximately 2 milliseconds, and due to the transfer of micromolar quantities of ions (e.g., sodium and potassium) across the cellular membrane. The complex impedance or resistance change due to the neuronal membrane falls from 1000 to 25 Ωcm. The introduction of a stimulus and subsequent measurement of the neural response can attenuate noise and improve signal to noise ratios to precisely focus on the response region to improve neural detection, measurement, and mapping.

In some embodiments, the difference in measurements of physiological parameters (e.g., complex impedance, resistance, voltage) over time, which can reduce errors, can be used to create a neural profiles, spectrums, or maps. For example, the sensitivity of the system 100 can

be improved because this process provides repeated averaging to a stimulus. As a result, the mapping function outputs can be a unit-less ratio between the reference and test collated data at a single frequency and/or multiple frequencies and/or multiple amplitudes. Additional considerations may include multiple frequency evaluation methods that consequently expand the parameter assessments, such as resistivity, admittivity, center frequency, or ratio of extra- to intracellular resistivity.

In some embodiments, the system 100 may also be configured to indirectly measure the electrical activity of neural structures to quantify the metabolic recovery processes that accompany action potential activity and act to restore ionic gradients to normal. These are related to an accumulation of ions in the extracellular space. The indirect measurement of electrical activity can be approximately a thousand times larger (in the order of millimolar), and thus are easier to measure and can enhance the accuracy of the measured electrical properties used to generate the neural maps.

The system 100 can perform dynamic neural detection by detecting nerve-firing voltage and/or current and, optionally, nerve firing rate over time, in response to an external stimulation of the nerves. For example, an array of the electrodes 136 can be positioned in contact with tissue at the interest zone, one or more of the electrodes 136 can be activated to inject a signal into the tissue that stimulates the nerves, and other electrodes 136 of the electrode array can measure the neural voltage and/or current due to nerve firing in response to the stimulus. This information can optionally be mapped (e.g., on a display 112) to identify the location of nerves and, in certain embodiments, identify parasympathetic nerves in a hyper state (e.g., indicative of Rhinitis or other diseased state). The dynamic detection of neural activity (voltage, current, firing rate, etc.) can be performed before neuromodulation therapy to detect target nerve locations to select the target site and treatment parameters to ensure that the correct tissue is treated during neuromodulation therapy. Further, dynamic detection of neural activity can be performed during or after neuromodulation therapy to allow the clinician to monitor changes in neural activity to validate treatment efficacy. For example, recording decreases or elimination of neural activity after neuromodulation therapy can indicate that the therapy was effective in therapeutically treating the hyper/diseased nerves.

In some embodiments, a stimulating signal can be delivered to the vicinity of the targeted nerve via one or more penetrating electrodes (e.g., microneedles that penetrate tissue) associated

with the end effector 114 and/or a separate device. The stimulating signal generates an action potential, which causes smooth muscle cells or other cells to contract. The location and strength of this contraction can be detected via the penetrating electrode(s) and, thereby, indicate to the clinician the distance to the nerve and/or the location of the nerve relative to the stimulating needle electrode. In some embodiments, the stimulating electrical signal may have a voltage of typically 1-2 mA or greater and a pulse width of typically 100-200 microseconds or greater. Shorter pulses of stimulation result in better discrimination of the detected contraction, but may require more current. The greater the distance between the electrode and the targeted nerve, the more energy is required to stimulate. The stimulation and detection of contraction strength and/or location enables identification of how close or far the electrodes are from the nerve, and therefore can be used to localize the nerve spatially. In some embodiments, varying pulse widths may be used to measure the distance to the nerve. As the needle becomes closer to the nerve, the pulse duration required to elicit a response becomes less and less.

To localize nerves via muscle contraction detection, the system 100 can vary pulse-width or amplitude to vary the energy (Energy=pulse-width*amplitude) of the stimulus delivered to the tissue via the penetrating electrode(s). By varying the stimulus energy and monitoring muscle contraction via the penetrating electrodes and/or other type of sensor, the system 100 can estimate the distance to the nerve. If a large amount of energy is required to stimulate the nerve/contract the muscle, the stimulating/penetrating electrode is far from the nerve. As the stimulating/penetrating electrode, moves closer to the nerve, the amount of energy required to induce muscle contraction will drop. For example, an array of penetrating electrodes can be positioned in the tissue at the interest zone and one or more of the electrodes can be activated to apply stimulus at different energy levels until they induce muscle contraction. Using an iterative process, localize the nerve (e.g., via the mapping/evaluation/feedback algorithm 110).

In some embodiments, the system 100 can measure the muscular activation from the nerve stimulus (e.g., via the electrodes 136) to determine neural positioning for neural mapping, without the use of penetrating electrodes. In this embodiment, the treatment device targets the smooth muscle cells' varicosities surrounding the submucosal glands and the vascular supply, and then the compound muscle action potential. This can be used to summate voltage response from the individual muscle fiber action potentials. The shortest latency is the time from stimulus artifact to onset of the response. The corresponding amplitude is measured from baseline to

negative peak and measured in millivolts (mV). Nerve latencies (mean±SD) in adults typically range about 2-6 milliseconds, and more typically from about 3.4±0.8 to about 4.0±0.5 milliseconds. A comparative assessment may then be made which compares the outputs at each time interval (especially pre- and post-energy delivery) in addition to a group evaluation using the alternative nasal cavity. This is expected to provide an accurate assessment of the absolute value of the performance of the neural functioning because muscular action/activation may be used to infer neural action/activation and muscle action/activation is a secondary effect or by-product whilst the neural function is the absolute performance measure.

In some embodiments, the system 100 can record a neuromagnetic field outside of the nerves to determine the internal current of the nerves without physical disruption of the nerve membrane. Without being bound by theory, the contribution to the magnetic field from the current inside the membrane is two orders of magnitude larger than that from the external current, and that the contribution from current within the membrane is substantially negligible. Electrical stimulation of the nerve in tandem with measurements of the magnetic compound action fields ("CAFs") can yield sequential positions of the current dipoles such that the location of the conduction change can be estimated (e.g., via the least-squares method). Visual representation (e.g., via the display 112) using magnetic contour maps can show normal or non-normal neural characteristics (e.g., normal can be equated with a characteristic quadrupolar pattern propagating along the nerve), and therefore indicate which nerves are in a diseases, hyperactive state and suitable targets for neuromodulation.

During magnetic field detection, an array of the electrodes 136 can be positioned in contact with tissue at the interest zone and, optionally, one or more of the electrodes 136 can be activated to inject an electrical stimulus into the tissue. As the nerves in the interest zone fire (either in response to a stimulus or in the absence of it), the nerve generates a magnetic field (e.g., similar to a current carrying wire), and therefore changing magnetic fields are indicative of the nerve nerve-firing rate. The changing magnetic field caused by neural firing can induce a current detected by nearby sensor wire (e.g., the sensor 314) and/or wires associated with the nearby electrodes 136. By measuring this current, the magnetic field strength can be determined. The magnetic fields can optionally be mapped (e.g., on a display 112) to identify the location of nerves and select target nerves (nerves with excessive parasympathetic tone) before neuromodulation therapy to ensure that the desired nerves are treated during neuromodulation

therapy. Further, the magnetic field information can be used during or after neuromodulation therapy so that the clinician can monitor changes in nerve firing rate to validate treatment efficacy.

In other embodiments, the neuromagnetic field is measured with a Hall Probe or other suitable device, which can be integrated into the end effector 114 and/or part of a separate device delivered to the interest zone. Alternatively, rather than measuring the voltage in the second wire, the changing magnetic field can be measured in the original wire (i.e. the nerve) using a Hall probe. A current going through the Hall probe will be deflected in the semi-conductor. This will cause a voltage difference between the top and bottom portions, which can be measured. In some aspects of this embodiments, three orthogonal planes are utilized.

In some embodiments, the system 100 can be used to induce electromotive force ("EMF") in a wire (i.e., a frequency-selective circuit, such as a tunable/LC circuit) that is tunable to resonant frequency of a nerve. In this embodiment, the nerve can be considered to be a current carrying wire, and the firing action potential is a changing voltage. This causes a changing current which, in turn, causes a changing magnetic flux (i.e., the magnetic field that is perpendicular to the wire). Under Faraday's Law of Induction/Faraday's Principle, the changing magnetic flux induces EMF (including a changing voltage) in a nearby sensor wire (e.g., integrated into the end effector 114, the sensor 314, and/or other structure), and the changing voltage can be measured via the system 100.

In further embodiments, the sensor wire (e.g., the sensor 314) is an inductor and, therefore, provides an increase of the magnetic linkage between the nerve (i.e., first wire) and the sensor wire (i.e., second wire), with more turns for increasing effect. (e.g., V2,rms=V1,rms (N2/N1)). Due to the changing magnetic field, a voltage is induced in the sensor wire, and this voltage can be measured and used to estimate current changes in the nerve. Certain materials can be selected to enhance the efficiency of the EMF detection. For example, the sensor wire can include a soft iron core or other high permeability material for the inductor.

During induced EMF detection, the end effector 114 and/or other device including a sensor wire is positioned in contact with tissue at the interest zone and, optionally, one or more of the electrodes 136 can be activated to inject an electrical stimulus into the tissue. As the nerves in the interest zone fire (either in response to a stimulus or in the absence of it), the nerve generates a magnetic field (e.g., similar to a current carrying wire) that induces a current in the

sensor wire (e.g., the sensor 314). This information can be used to determine neural location and/or map the nerves (e.g., on a display 112) to identify the location of nerves and select target nerves (nerves with excessive parasympathetic tone) before neuromodulation therapy to ensure that the desired nerves are treated during neuromodulation therapy. EMF information can also be used during or after neuromodulation therapy so that the clinician can monitor changes in nerve firing rate to validate treatment efficacy.

In some embodiments, the system 100 can detect magnetic fields and/or EMF generated at a selected frequency that corresponds to a particular type of nerve. The frequency and, by extension, the associated nerve type of the detected signal can be selected based on an external resonant circuit. Resonance occurs on the external circuit when it is matched to the frequency of the magnetic field of the particular nerve type and that nerve is firing. In manner, the system 100 can be used to locate a particular sub-group/type of nerves.

In some embodiments, the system 100 can include a variable capacitor frequency-selective circuit to identify the location and/or map specific nerves (e.g., parasympathetic nerve, sensory nerve, nerve fiber type, nerve subgroup, etc.). The variable capacitor frequency-selective circuit can be defined by the sensor 314 and/or other feature of the end effector 114. Nerves have different resonant frequencies based on their function and structure. Accordingly, the system 100 can include a tunable LC circuit with a variable capacitor (C) and/or variable inductor (L) that can be selectively tuned to the resonant frequency of desired nerve types. This allows for the detection of neural activity only associated with the selected nerve type and its associated resonant frequency. Tuning can be achieved by moving the core in and out of the inductor. For example, tunable LC circuits can tune the inductor by: (i) changing the number of coils around the core; (ii) changing the cross-sectional area of the coils around the core; (iii) changing the length of the coil; and/or (iv) changing the permeability of the core material (e.g., changing from air to a core material). Systems including such a tunable LC circuit provide a high degree of dissemination and differentiation not only as to the activation of a nerve signal, but also with respect to the nerve type that is activated and the frequency at which the nerve is firing.

<u>Anatomical Mapping</u>

In various embodiments, the system 100 is further configured to provide minimally-invasive anatomical mapping that uses focused energy current/voltage stimuli from a spatially localized source (e.g., the electrodes 136) to cause a change in the conductivity of the of the tissue at the interest zone and detect resultant biopotential and/or bioelectrical measurements (e.g., via the electrodes 136). The current density in the tissue changes in response to changes of voltage applied by the electrodes 136, which creates a change in the electric current that can be measured with the end effector 114 and/or other portions of the system 100. The results of the bioelectrical and/or biopotential measurements can be used to predict or estimate relative absorption profilometry to predict or estimate the tissue structures in the interest zone. More specifically, each cellular construct has unique conductivity and absorption profiles that can be indicative of a type of tissue or structure, such as bone, soft tissue, vessels, nerves, types of nerves, and/or certain neural structures. For example, different frequencies decay differently through different types of tissue. Accordingly, by detecting the absorption current in a region, the system 100 can determine the underlying structure and, in some instances, to a sub-microscale, cellular level that allows for highly specialized target localization and mapping. This highly specific target identification and mapping enhances the efficacy and efficiency of neuromodulation therapy, while also enhancing the safety profile of the system 100 to reduce collateral effects on non-target structures.

To detect electrical and dielectric tissue properties (e.g., resistance, complex impedance, conductivity, and/or, permittivity as a function of frequency), the electrodes 136 and/or another electrode array is placed on tissue at an interest region, and an internal or external source (e.g., the generator 106) applies stimuli (current/voltage) to the tissue. The electrical properties of the tissue between the source and the receiver electrodes 136 are measured, as well as the current and/or voltage at the individual receiver electrodes 136. These individual measurements can then be converted into an electrical map/image/profile of the tissue and visualized for the user on the display 112 to identify anatomical features of interest and, in certain embodiments, the location of firing nerves. For example, the anatomical mapping can be provided as a color-coded or gray-scale three-dimensional or two-dimensional map showing differing intensities of certain bioelectric properties (e.g., resistance, impedance, etc.), or the information can be processed to map the actual anatomical structures for the clinician. This information can also be used during neuromodulation therapy to monitor treatment progression with respect to the anatomy, and after

neuromodulation therapy to validate successful treatment. In addition, the anatomical mapping provided by the bioelectrical and/or biopotential measurements can be used to track the changes to non-target tissue (e.g., vessels) due to neuromodulation therapy to avoid negative collateral effects. For example, a clinician can identify when the therapy begins to ligate a vessel and/or damage tissue, and modify the therapy to avoid bleeding, detrimental tissue ablation, and/or other negative collateral effects.

Furthermore, the threshold frequency of electric current used to identify specific targets can subsequently be used when applying therapeutic neuromodulation energy. For example, the neuromodulation energy can be applied at the specific threshold frequencies of electric current that are target neuronal-specific and differentiated from other non-targets (e.g., blood vessels, non-target nerves, etc.). Applying ablation energy at the target-specific frequency results in an electric field that creates ionic agitation in the target neural structure, which leads to differentials in osmotic potentials of the targeted neural structures. These osmotic potential differentials cause dynamic changes in neuronal membronic potentials (resulting from the difference in intra-cellular and extra-cellular fluidic pressure) that lead to vacuolar degeneration of the targeted neural structures and, eventually, necrosis. Using the highly targeted threshold neuromodulation energy to initiate the degeneration allows the system 100 to delivery therapeutic neuromodulation to the specific target, while surrounding blood vessels and other non-target structures are functionally maintained.

In some embodiments, the system 100 can further be configured to detect bioelectrical properties of tissue by non-invasively recording resistance changes during neuronal depolarization to map neural activity with electrical impedance, resistance, bio-impedance, conductivity, permittivity, and/or other bioelectrical measurements. Without being bound by theory, when a nerve depolarizes, the cell membrane resistance decreases (e.g., by approximately 80×) so that current will pass through open ion channels and into the intracellular space. Otherwise the current remains in the extracellular space. For non-invasive resistance measurements, tissue can be stimulated by applying a current of less than 100 Hz, such as applying a constant current square wave at 1 Hz with an amplitude less than 25% (e.g., 10%) of the threshold for stimulating neuronal activity, and thereby preventing or reducing the likelihood that the current does not cross into the intracellular space or stimulating at 2 Hz. In either case,

the resistance and/or complex impedance is recorded by recording the voltage changes. A complex impedance or resistance map or profile of the area can then be generated.

For impedance/conductivity/permittivity detection, the electrodes 136 and/or another electrode array are placed on tissue at an interest region, and an internal or external source (e.g., the generator 106) applies stimuli to the tissue, and the current and/or voltage at the individual receiver electrodes 136 is measured. The stimuli can be applied at different frequencies to isolate different types of nerves. These individual measurements can then be converted into an electrical map/image/profile of the tissue and visualized for the user on the display 112 to identify anatomical features of interest. The neural mapping can also be used during neuromodulation therapy to select specific nerves for therapy, monitor treatment progression with respect to the nerves and other anatomy, and validate successful treatment.

In some embodiments of the neural and/or anatomical detection methods described above, the procedure can include comparing the mid-procedure physiological parameter(s) to the baseline physiological parameter(s) and/or other, previously-acquired mid-procedure physiological parameter(s) (within the same energy delivery phase). Such a comparison can be used to analyze state changes in the treated tissue. The mid-procedure physiological parameter(s) may also be compared to one or more predetermined thresholds, for example, to indicate when to stop delivering treatment energy. In some embodiments of the present technology, the measured baseline, mid-, and post-procedure parameters include a complex impedance. In some embodiments of the present technology, the post-procedure physiological parameters are measured after a pre-determined time period to allow the dissipation of the electric field effects (ionic agitation and/or thermal thresholds), thus facilitating accurate assessment of the treatment.

In some embodiments, the anatomical mapping methods described above can be used to differentiate the depth of soft tissues within the nasal mucosa. The depth of mucosa on the turbinates is great whilst the depth off the turbinate is shallow and, therefore, identifying the tissue depth in the present technology also identifies positions within the nasal mucosa and where precisely to target. Further, by providing the micro-scale spatial impedance mapping of epithelial tissues as described above, the inherent unique signatures of stratified layers or cellular bodies can be used as identifying the region of interest. For example, different regions have

larger or small populations of specific structures, such as submucosal glands, so target regions can be identified via the identification of these structures.

In some embodiments, the system 100 includes additional features that can be used to detect anatomical structures and map anatomical features. For example, the system 100 can include an ultrasound probe for identification of neural structures and/or other anatomical structures. Higher frequency ultrasound provides higher resolution, but less depth of penetration. Accordingly, the frequency can be varied to achieve the appropriate depth and resolution for neural/anatomical localization. Functional identification may rely on the spatial pulse length ("SPL") (wavelength multiplied by number of cycles in a pulse). Axial resolution (SPL/2) may also be determined to locate nerves.

In some embodiments, the system 100 can further be configured to emit stimuli with selective parameters that suppress rather than fully stimulate neural activity. for example, in embodiments where the strength-duration relationship for extracellular neural stimulation is selected and controlled, a state exists where the extracellular current can hyperpolarize cells, resulting in suppression rather than stimulation spiking behavior (i.e., a full action potential is not achieved). Both models of ion channels, HH and RGC, suggest that it is possible to hyperpolarize cells with appropriately designed burst extracellular stimuli, rather than extending the stimuli. This phenomenon could be used to suppress rather than stimulate neural activity during any of the embodiments of neural detection and/or modulation described herein.

In various embodiments, the system 100 could apply the anatomical mapping techniques disclosed herein to locate or detect the targeted vasculature and surrounding anatomy before, during, and/or after treatment.

Reference throughout this specification to "one embodiment" or "an embodiment" means that a particular feature, structure, or characteristic described in connection with the embodiment is included in at least one embodiment. Thus, appearances of the phrases "in one embodiment" or "in an embodiment" in various places throughout this specification are not necessarily all referring to the same embodiment. Furthermore, the particular features, structures, or characteristics may be combined in any suitable manner in one or more embodiments.

The terms and expressions which have been employed herein are used as terms of description and not of limitation, and there is no intention, in the use of such terms and expressions, of excluding any equivalents of the features shown and described (or portions

thereof), and it is recognized that various modifications are possible within the scope of the claims. Accordingly, the claims are intended to cover all such equivalents.

Incorporation by Reference

References and citations to other documents, such as patents, patent applications, patent publications, journals, books, papers, web contents, have been made throughout this disclosure. All such documents are hereby incorporated herein by reference in their entirety for all purposes.

Equivalents

Various modifications of the invention and many further embodiments thereof, in addition to those shown and described herein, will become apparent to those skilled in the art from the full contents of this document, including references to the scientific and patent literature cited herein. The subject matter herein contains important information, exemplification and guidance that can be adapted to the practice of this invention in its various embodiments and equivalents thereof.

Claims

What is claimed is:

1. A method for treating at least one of rhinitis, congestion, and rhinorrhea within a sino-nasal cavity of a patient, the method comprising:

advancing a multi-electrode end effector into the sino-nasal cavity of the patient, wherein the multi-electrode end effector is operably associated with a shaft of a treatment device and configured for delivering energy to one or more target sites within the sino-nasal cavity of the patient, wherein the multi-electrode end effector comprises a first electrode that is spaced apart from a second electrode along a length of the multi-electrode end effector, wherein each of the first and second electrodes comprise an active state and an inactive state and comprise a respective location on the multi-electrode end effector, and wherein:

the first electrode is exposed from a surface of the multi-electrode end effector and is positioned at a discrete portion thereon, the first electrode extending in a first outward direction relative to a longitudinal axis of the shaft to interact with anatomy at a first location within the nasal cavity; and

the second electrode is exposed from the surface of the multi-electrode end effector and is positioned at a discrete portion thereon, the second electrode extending in a second outward direction relative to a longitudinal axis of the shaft to interact with anatomy at a second location within the nasal cavity; and

delivering energy, via the first and second electrodes, to one or more target sites within a sino-nasal cavity of the patient to disrupt multiple neural signals to mucus producing and/or mucosal engorgement elements, thereby reducing production of mucus and/or mucosal engorgement within a nose of the patient and reducing or eliminating one or more symptoms associated with at least one of rhinitis, congestion, and rhinorrhea to improve nasal breathability of the patient, wherein the one or more target sites is associated with a posterior nasal nerve and/or an inferior turbinate within the sino-nasal cavity.

2. The method of claim 1, wherein radiofrequency (RF) energy is delivered from the first and second electrodes to tissue at the one or more target sites and is controlled via a console unit operably associated with the treatment device and multi-electrode end effector.

3. The method of claim 2, wherein the console unit is configured to receive feedback from at least one temperature sensor arranged relative to the first and second electrodes and configured to sense temperature at an interface between tissue and the first and second electrodes, wherein the console unit is configured to control energy output from the first and second electrodes based, at least in part, on the feedback in order to maintain a predetermined temperature of tissue at the one or more target sites.

4. The method of claim 3, wherein the console unit is configured to receive one or more temperature readings from the at least one temperature sensor and process the readings to determine a level of RF energy to be delivered by the first and second electrodes that is sufficient to maintain a temperature of tissue at the one or more target sites below a predetermined threshold.

5. The method of claim 4, wherein the console unit comprises a hardware processor coupled to non-transitory, computer-readable memory containing instructions executable by the processor to cause the console unit to automatically control and adjust RF energy output from the first and second electrodes based, at least in part, on a predetermined elapsed time period and a predetermined threshold maximum temperature during delivery of RF energy to ensure that application of said RF energy results in the desired effect of reduced engorgement of the tissue at the target site for a given treatment application.

6. The method of claim 5, the predetermined elapsed time period is from about 1 second to about 20 seconds.

7. The method of claim 6, wherein the predetermined elapsed time period is from about 10 seconds to about 12 seconds.

8. The method of claim 5, wherein the predetermined threshold maximum temperature is less than 90°C.

9. The method of claim 5, wherein the predetermined threshold maximum temperature is greater than 37°C and less than 90°C.

10. The method of claim 4, wherein the console unit is configured to monitor temperature of tissue at the one or more target sites during delivery of RF energy thereto based on temperature readings from the at least one temperature sensor and further monitor an elapsed time during delivery of RF energy to tissue at the one or more target sites.

11. The method of claim 4, wherein the console unit is configured to provide, via a display, feedback information to an operator during a given treatment application, wherein said feedback information comprises at least an elapsed time during delivery of RF energy to tissue at the one or more target sites.

12. The method of claim 11, wherein the display is a touchscreen monitor.

13. The method of claim 2, wherein the console unit is operably coupled to an energy generator configured to generate RF energy to be delivered by the first and second electrodes.

14. The method of claim 13, wherein the RF energy comprises at least bipolar RF energy.

15. The method of claim 1, wherein the multi-electrode end effector comprises at least four electrodes,

wherein the at least four electrodes are oriented at an angle less than 90 degrees relative to the shaft for the delivery of radiofrequency (RF) energy,

wherein the shaft is a substantially rigid shaft with a hollow cavity,

wherein the shaft comprises an outer sheath and hypotube,

wherein the first electrode and second electrode is operably coupled to a console unit via wires disposed in the hollow cavity of the substantially rigid shaft, and

wherein RF energy is delivered from the first and second electrodes to tissue at the one or more target sites and is controlled via the console unit operably associated with the treatment device and multi-electrode end effector.

16. The method of claim 15, wherein the multi-electrode end effector comprises at least six electrodes, and

wherein the at least six electrodes are oriented at an angle less than 90 degrees relative to the shaft for the delivery of RF energy.

17. The method of claim 15, wherein the multi-electrode end effector comprises at least eight electrodes, and

wherein the at least eight electrodes are oriented at an angle less than 90 degrees relative to the shaft for the delivery of RF energy.

18. The method of claim 1, wherein delivering energy, via the first and second electrodes, to one or more target sites within a sino-nasal cavity of the patient comprises delivering energy targeting tissue at the one or more target sites around the posterior nasal nerve and/or the inferior turbinate.

19. The method of claim 18, wherein the targeted tissue comprises submucosal tissue associated with the inferior turbinate.

20. The method of claim 18, wherein the delivery of energy generates heat within submucosal tissue around a region of the posterior nasal nerve.

Abstract

The invention generally relates to systems and methods for improving sleep by treating at least one of rhinitis, congestion, and/or rhinorrhea to thereby reduce or eliminate symptoms associated therewith, including, but not limited to, nasal congestion, coughing, sneezing, and nasal or throat irritation and itching.

PTO/AIA/01 (06-12)
Approved for use through 05/31/2024. OMB 0651-0032
U.S. Patent and Trademark Office; U.S. DEPARTMENT OF COMMERCE
Under the Paperwork Reduction Act of 1995, no persons are required to respond to a collection of information unless it displays a valid OMB control number.

DECLARATION (37 CFR 1.63) FOR UTILITY OR DESIGN APPLICATION USING AN APPLICATION DATA SHEET (37 CFR 1.76)

Title of Invention	SYSTEMS AND METHODS FOR IMPROVING SLEEP WITH THERAPEUTIC NASAL TREATMENT

As the below named inventor, I hereby declare that:

This declaration is directed to:

☐ The attached application, or

☒ United States application or PCT international application number 17/225,560 filed on April 8, 2021.

The above-identified application was made or authorized to be made by me.

I believe that I am the original inventor or an original joint inventor of a claimed invention in the application.

I hereby acknowledge that any willful false statement made in this declaration is punishable under 18 U.S.C. 1001 by fine or imprisonment of not more than five (5) years, or both.

WARNING:

Petitioner/applicant is cautioned to avoid submitting personal information in documents filed in a patent application that may contribute to identity theft. Personal information such as social security numbers, bank account numbers, or credit card numbers (other than a check or credit card authorization form PTO-2038 submitted for payment purposes) is never required by the USPTO to support a petition or an application. If this type of personal information is included in documents submitted to the USPTO, petitioners/applicants should consider redacting such personal information from the documents before submitting them to the USPTO. Petitioner/applicant is advised that the record of a patent application is available to the public after publication of the application (unless a non-publication request in compliance with 37 CFR 1.213(a) is made in the application) or issuance of a patent. Furthermore, the record from an abandoned application may also be available to the public if the application is referenced in a published application or an issued patent (see 37 CFR 1.14). Checks and credit card authorization forms PTO-2038 submitted for payment purposes are not retained in the application file and therefore are not publicly available.

LEGAL NAME OF INVENTOR

Inventor: David Townley Date (Optional) :

Signature: David Townley

Note: An application data sheet (PTO/SB/14 or equivalent), including naming the entire inventive entity, must accompany this form or must have been previously filed. Use an additional PTO/AIA/01 form for each additional inventor.

A Federal agency may not conduct or sponsor, and a person is not required to respond to, nor shall a person be subject to a penalty for failure to comply with an information collection subject to the requirements of the Paperwork Reduction Act of 1995, unless the information collection has a currently valid OMB Control Number. The OMB Control Number for this information collection is 0651-0032. Public burden for this form is estimated to average 1 minute per response, including the time for reviewing instructions, searching existing data sources, gathering and maintaining the data needed, and completing and reviewing the information collection. Send comments regarding this burden estimate or any other aspect of this information collection, including suggestions for reducing this burden to the Chief Administrative Officer, United States Patent and Trademark Office, P.O. Box 1450, Alexandria, VA 22313-1450 or email InformationCollection@uspto.gov. **DO NOT SEND FEES OR COMPLETED FORMS TO THIS ADDRESS.** If filing this completed form by mail, send to: **Commissioner for Patents, P.O. Box 1450, Alexandria, VA 22313-1450.**

If you need assistance in completing the form, call 1-800-PTO-9199 and select option 2.

UNITED STATES
PATENT AND TRADEMARK OFFICE

P.O. Box 1450
Alexandria, VA 22313 - 1450
www.uspto.gov

ELECTRONIC PAYMENT RECEIPT

APPLICATION #	RECEIPT DATE / TIME	ATTORNEY DOCKET #
18/647,755	04/26/2024 04:14:25 PM Z ET	NEURE-008/08US 35242/160

Title of Invention

SYSTEMS AND METHODS FOR THERAPEUTIC NASAL TREATMENT USING HANDHELD DEVICE

Application Information

APPLICATION TYPE	Utility - Nonprovisional Application under 35 USC 111(a)	PATENT #	-
CONFIRMATION #	9306	FILED BY	Jeanne Waters
PATENT CENTER #	65265174	AUTHORIZED BY	Adam Schoen
CUSTOMER #	21710	FILING DATE	-
CORRESPONDENCE ADDRESS	-	FIRST NAMED INVENTOR	David Townley

Payment Information

PAYMENT METHOD	PAYMENT TRANSACTION ID	PAYMENT AUTHORIZED BY
DA / 500369	E20244PG15369441	Jeanne Waters

FEE CODE	DESCRIPTION	ITEM PRICE($)	QUANTITY	ITEM TOTAL($)
2830	PROCESSING FEE, EXCEPT IN PROVISIONAL APPLICATIONS	56.00	1	56.00
2817	REQUEST FOR PRIORITIZED EXAMINATION	1680.00	1	1680.00
2111	UTILITY PATENT APPL. SEARCH FEE	280.00	1	280.00
4011	BASIC FILING FEE- UTILITY	64.00	1	64.00
2311	EXAMINATION OF ORIGINAL PATENT APPLICATION	320.00	1	320.00
			TOTAL	$2,400.00

AMOUNT:

This Acknowledgement Receipt evidences receipt on the noted date by the USPTO of the indicated documents, characterized by the applicant, and including page counts, where applicable. It serves as evidence of receipt similar to a Post Card, as described in MPEP 503.

New Applications Under 35 U.S.C. 111

If a new application is being filed and the application includes the necessary components for filing date (see 37 CFR 1.53(b)-(d) and MPEP 506), a Filing Receipt (37 CFR 1.54) will be issued in due course and the date shown on this Acknowledgement Receipt will establish the filing date of the application

National Stage of an International Application under 35 U.S.C. 371

If a timely submission to enter the national stage of an international application is compliant with the conditions of 35 U.S.C. 371 and other applicable requirements a Form PCT/DO/EO/903 indicating acceptance of the application as a national stage submission under 35 U.S.C. 371 will be issued in addition to the Filing Receipt, in due course.

New International Application Filed with the USPTO as a Receiving Office

If a new international application is being filed and the international application includes the necessary components for an international filing date (see PCT Article 11 and MPEP 1810), a Notification of the International Application Number and of the International Filing Date (Form PCT/RO/105) will be issued in due course, subject to prescriptions concerning national security, and the date shown on this Acknowledgement Receipt will establish the international filing date of the application.

UNITED STATES
PATENT AND TRADEMARK OFFICE

P.O. Box 1450
Alexandria, VA 22313 - 1450
www.uspto.gov

ELECTRONIC ACKNOWLEDGEMENT RECEIPT

APPLICATION #	RECEIPT DATE / TIME	ATTORNEY DOCKET #
18/647,755	**04/26/2024 04:14:25 PM Z ET**	**NEURE-008/08US 35242/160**

Title of Invention

SYSTEMS AND METHODS FOR THERAPEUTIC NASAL TREATMENT USING HANDHELD DEVICE

Application Information

APPLICATION TYPE	Utility - Nonprovisional Application under 35 USC 111(a)	PATENT #	-
CONFIRMATION #	9306	FILED BY	Jeanne Waters
PATENT CENTER #	65265174	FILING DATE	-
CUSTOMER #	21710	FIRST NAMED INVENTOR	David Townley
CORRESPONDENCE ADDRESS	-	AUTHORIZED BY	Adam Schoen

Documents

TOTAL DOCUMENTS: 6

DOCUMENT	PAGES	DESCRIPTION	SIZE (KB)
NEURE-008-08US_ADS.pdf	8	Application Data Sheet	2174 KB
NEURE-008-08US_Track-1-Request.pdf	1	Track One Request	189 KB
NEURE-008-08US_Figures.pdf	23	Drawings-only black and white line drawings	6117 KB
NEURE-008-08US_Inventor_Dec.pdf	1	Oath or Declaration filed	112 KB
NEURE-008-08US_Application-APP.TEXT.docx	86	Application body structured text document	91 KB

Warning: Bookmarks were found and have been removed. The abstract should be in narrative form and generally limited to a single paragraph preferably within the range of 50 to 150 words in length. See MPEP 608.01(b). The abstract contains more than one paragraph. Please review and revise if necessary.

NEURE-008-08US_Application.pdf	86	Auxiliary PDF of Application	326 KB

Digest

DOCUMENT	MESSAGE DIGEST(SHA-512)
NEURE-008-08US_ADS.pdf	0C2ECC633031229BA11069EC3F500B2D5669C8C92C4B9CDF5639D4E95BD823BAD41084909C9584B5AEAAF828C637F0D4A221A53D4404A7BB0D11E86E75565BF5
NEURE-008-08US_Track-1-Request.pdf	5A4DA01C59C716AE0605AF2C8DC40598356EE63B47CE5AD09CB6ACA2C13F644897E3D6B93DE89DBF05D0471BBDB1E04C38F0C1197EA6054488E2D5381BD71305
NEURE-008-08US_Figures.pdf	E6B4AD4A43267B418219CC5697C6C60A7C7D9BFF3E705CFAD534FE60DF322829616F2ABFADC38E702A7B8E183A35D2A06554AD975D92EEC7699B5DA153FF87D5
NEURE-008-08US_Inventor_Dec.pdf	ECF2DA8969AAF437900673CB81B1DF45DF3852E76BE6B0DE97F96FAE584EF045D71047FD16006205423DC1C3AC8A434581A78934030A5CEF7B6A7D72105CED74
NEURE-008-08US_Application-APP.TEXT.docx	59156225620F67339754BAB6EACE86732160347E6E279BB0E5760E4BF1F0CAE7D50E9B12C75D3B2253F6AC1142712ED72B26CE4EB47A7BCB83A8B916CFD70FE4
NEURE-008-08US_Application.pdf	131244E12B2AA0E57624BC2151D567740BA9D97EF87D5AE713BB5507A3A2E324CF9350100FC9087007589CCF8C420A824DBCAA06B9C714B874EFB79667B4FD3C

This Acknowledgement Receipt evidences receipt on the noted date by the USPTO of the indicated documents, characterized by the applicant, and including page counts, where applicable. It serves as evidence of receipt similar to a Post Card, as

described in MPEP 503.

New Applications Under 35 U.S.C. 111

If a new application is being filed and the application includes the necessary components for filing date (see 37 CFR 1.53(b)-(d) and MPEP 506), a Filing Receipt (37 CFR 1.54) will be issued in due course and the date shown on this Acknowledgement Receipt will establish the filing date of the application

National Stage of an International Application under 35 U.S.C. 371

If a timely submission to enter the national stage of an international application is compliant with the conditions of 35 U.S.C. 371 and other applicable requirements a Form PCT/DO/EO/903 indicating acceptance of the application as a national stage submission under 35 U.S.C. 371 will be issued in addition to the Filing Receipt, in due course.

New International Application Filed with the USPTO as a Receiving Office

If a new international application is being filed and the international application includes the necessary components for an international filing date (see PCT Article 11 and MPEP 1810), a Notification of the International Application Number and of the International Filing Date (Form PCT/RO/105) will be issued in due course, subject to prescriptions concerning national security, and the date shown on this Acknowledgement Receipt will establish the international filing date of the application.

DocCode - SCORE

Placeholder Sheet for Supplemental Content

Application Number: 18647755 Document Date: 04/26/2024

The presence of this form indicates that the following document type was received in electronic format on the date identified above. This document is stored separately from the typical case contents which are stored in image format.

Since this was an electronic submission, there is no physical artifact folder, no artifact folder is recorded and no paper documents or physical media exist.

- Drawing

At the time of document entry (noted above):

- USPTO employees may access this supplemental content via Docket Application Viewer (DAV) or Supplemental Content Viewer (SCV).
- External customers may access this supplemental content via Patent Center.

Form Revision Date: March 1, 2024

DocCode - SCORE

SCORE Placeholder Sheet for IFW Content

Application Number: 18647755 Document Date: 04/26/2024

The presence of this form in the IFW record indicates that the following document type was received in electronic format on the date identified above. This content is stored in the SCORE database.

Since this was an electronic submission, there is no physical artifact folder, no artifact folder is recorded in PALM, and no paper documents or physical media exist. The TIFF images in the IFW record were created from the original documents that are stored in SCORE.

- Drawing

At the time of document entry (noted above):

- USPTO employees may access SCORE content via DAV or via the SCORE web page.
- External customers may access SCORE content via PAIR using the Supplemental Content tab.

Form Revision Date: March 1, 2019