US 20200129223A1

(19) United States
(12) Patent Application Publication
Angeles et al.
(10) Pub. No.: US 2020/0129223 A1
(43) Pub. Date: Apr. 30, 2020

(54) **ELECTROSURGICAL DEVICE CONSOLE**

(71) Applicant: **AERIN MEDICAL, INC.**, Sunnyvale, CA (US)

(72) Inventors: **Michael Angeles**, Alberta (CA); **Andrew Frazier**, Sunnyvale, CA (US); **Fred Dinger**, Austin, TX (US)

(21) Appl. No.: **16/668,678**

(22) Filed: **Oct. 30, 2019**

Related U.S. Application Data

(60) Provisional application No. 62/753,469, filed on Oct. 31, 2018.

Publication Classification

(51) **Int. Cl.**
A61B 18/12 (2006.01)

(52) **U.S. Cl.**
CPC *A61B 18/1206* (2013.01); *A61B 2018/00327* (2013.01)

(57) **ABSTRACT**

A console for an electrosurgical device may include a housing, an energy generator in the housing, a computer processor in the housing, a connector on the housing, for connecting the console with an energy delivery treatment device, a touchscreen display on the housing, and a non-transitory computer readable medium in the computer processor. The computer readable medium may contain computer-executable programming instructions for providing an active display on the touchscreen display. The active display may include a central circle, a countdown timer in the central circle for counting down a total time remaining in an energy delivery procedure, and an outer ring around the central circle, configured to indicate the total time remaining in the energy delivery procedure, a remaining time in an energy delivery stage of the energy delivery procedure, and a remaining time in a cooling stage of the energy delivery procedure.

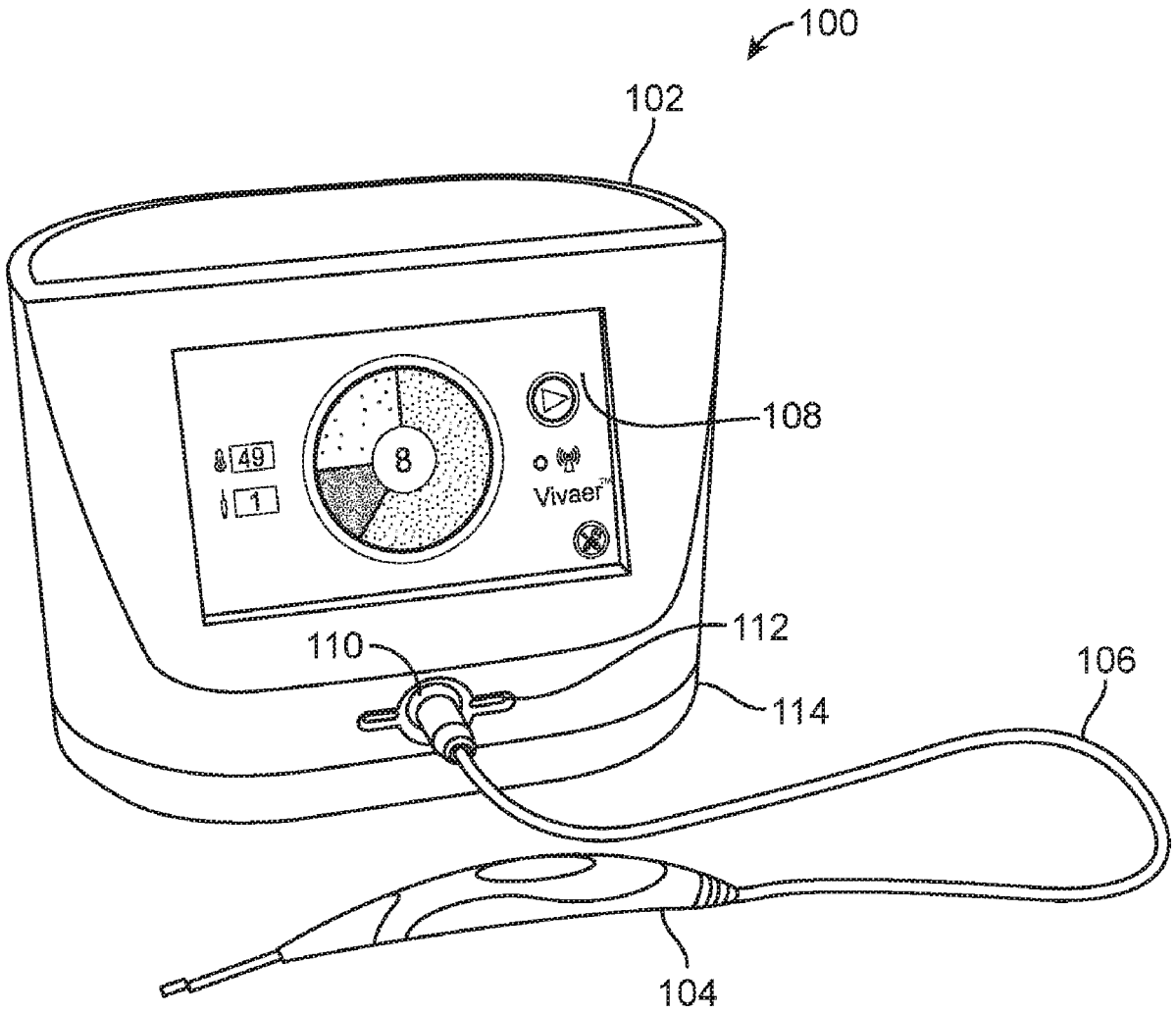

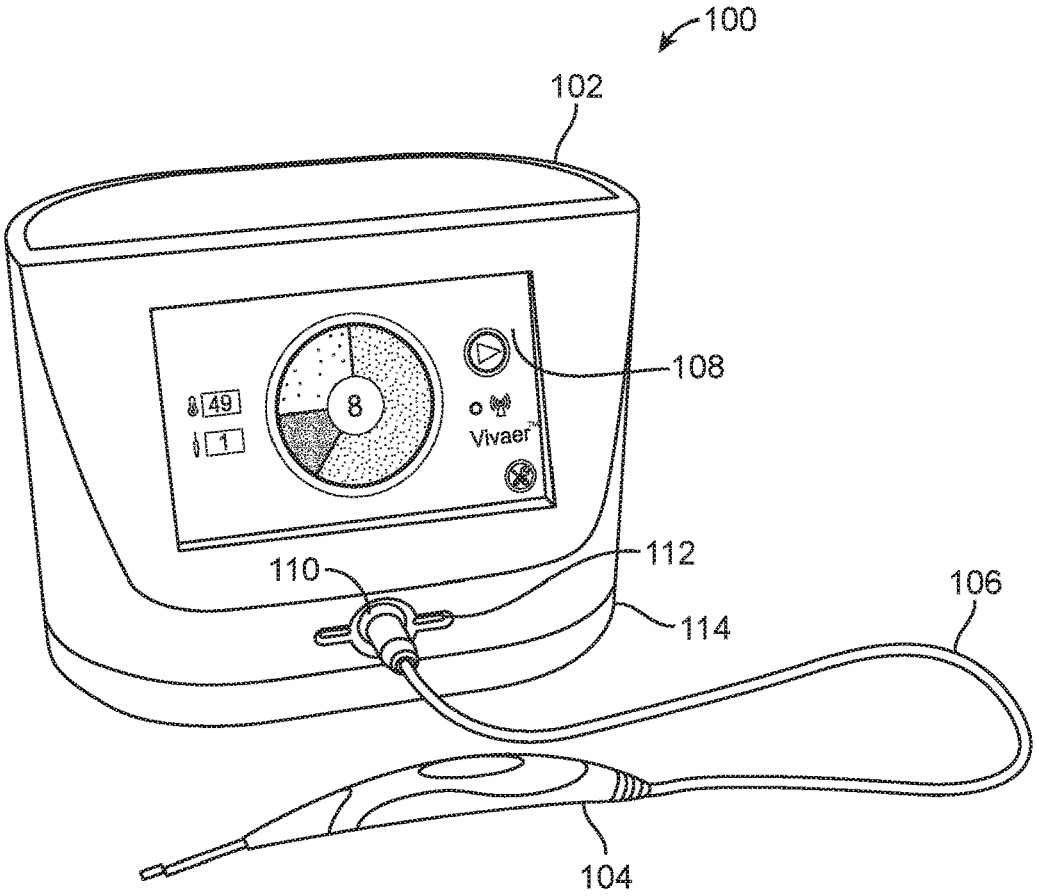
100
102
108
49
1
8
Vivaer
110
112
114
106
104

FIG. 1

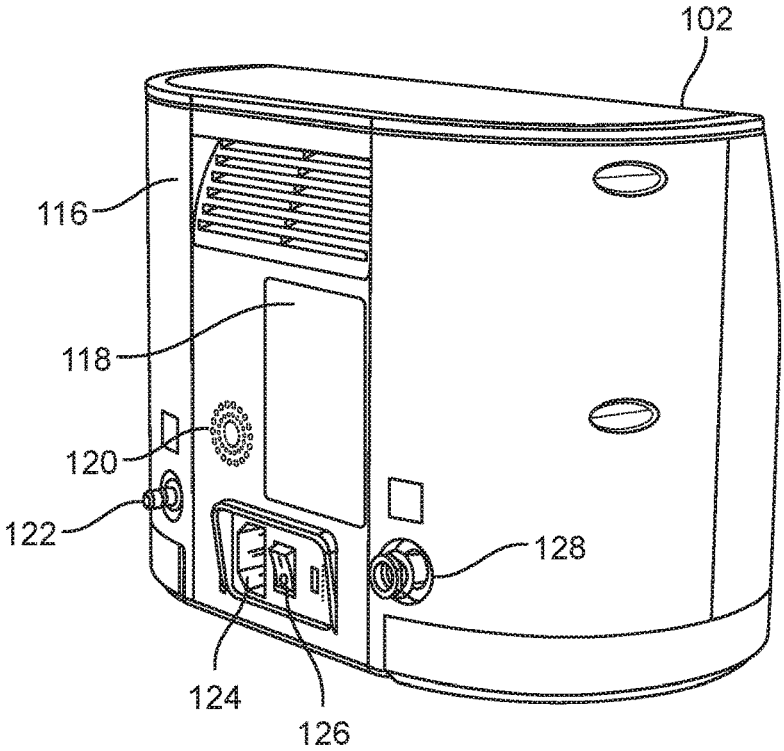
102
116
118
120
122
128
124
126

FIG. 2

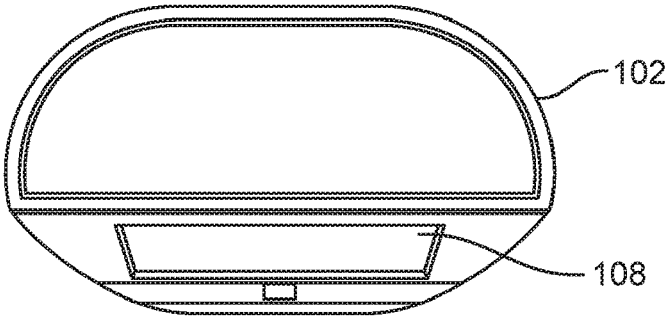

FIG. 3A

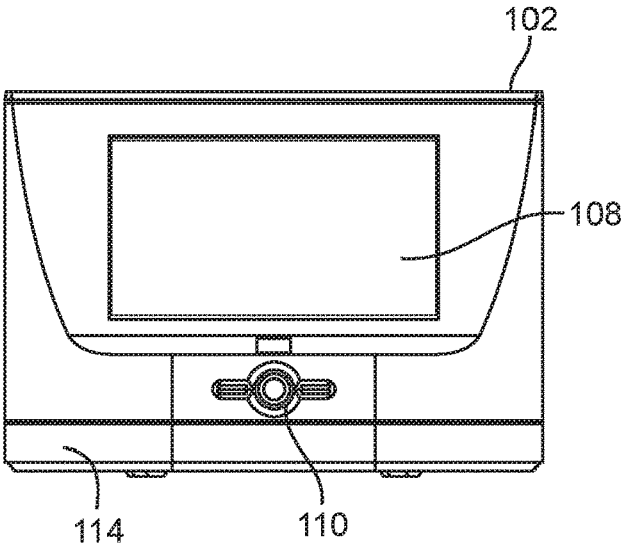

FIG. 3B

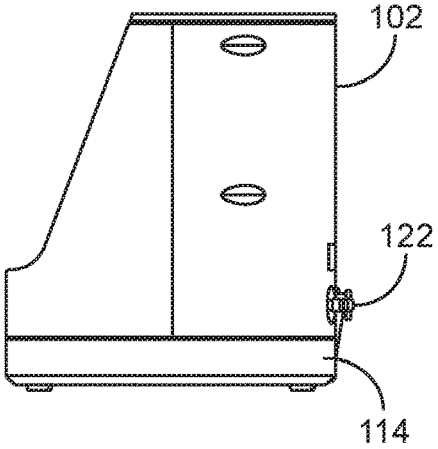

FIG. 3C

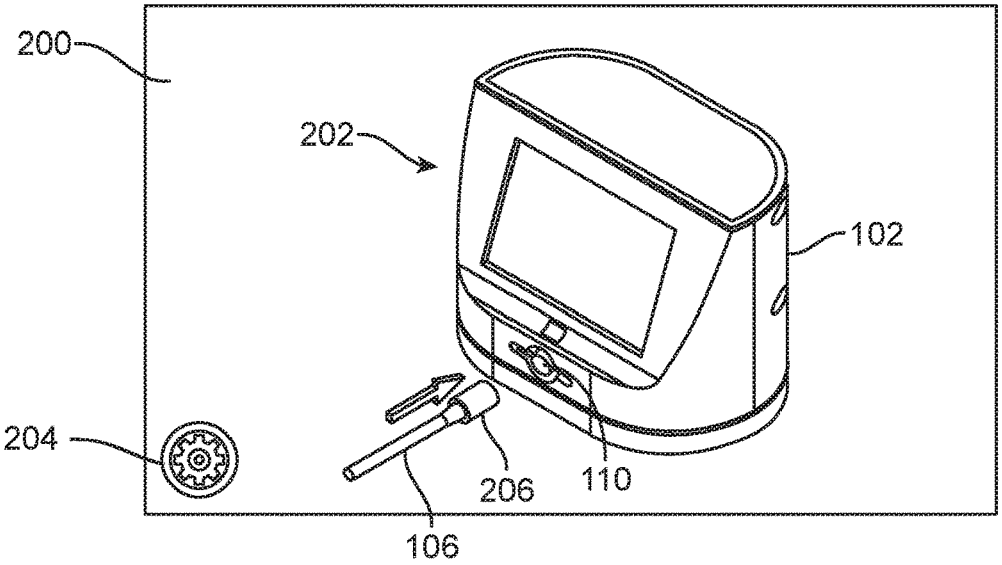

FIG. 4

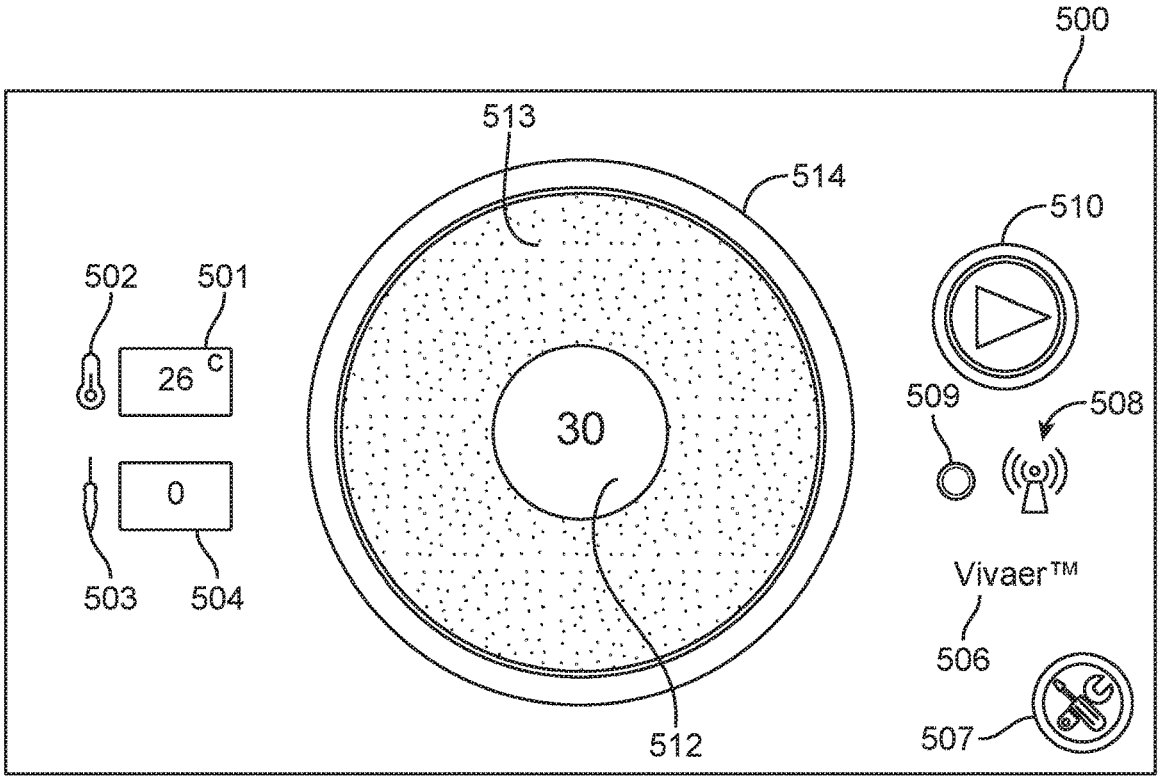
500
513
514
510
502
501
26 C
30
509
508
0
Vivaer™
503
504
506
512
507

FIG. 5

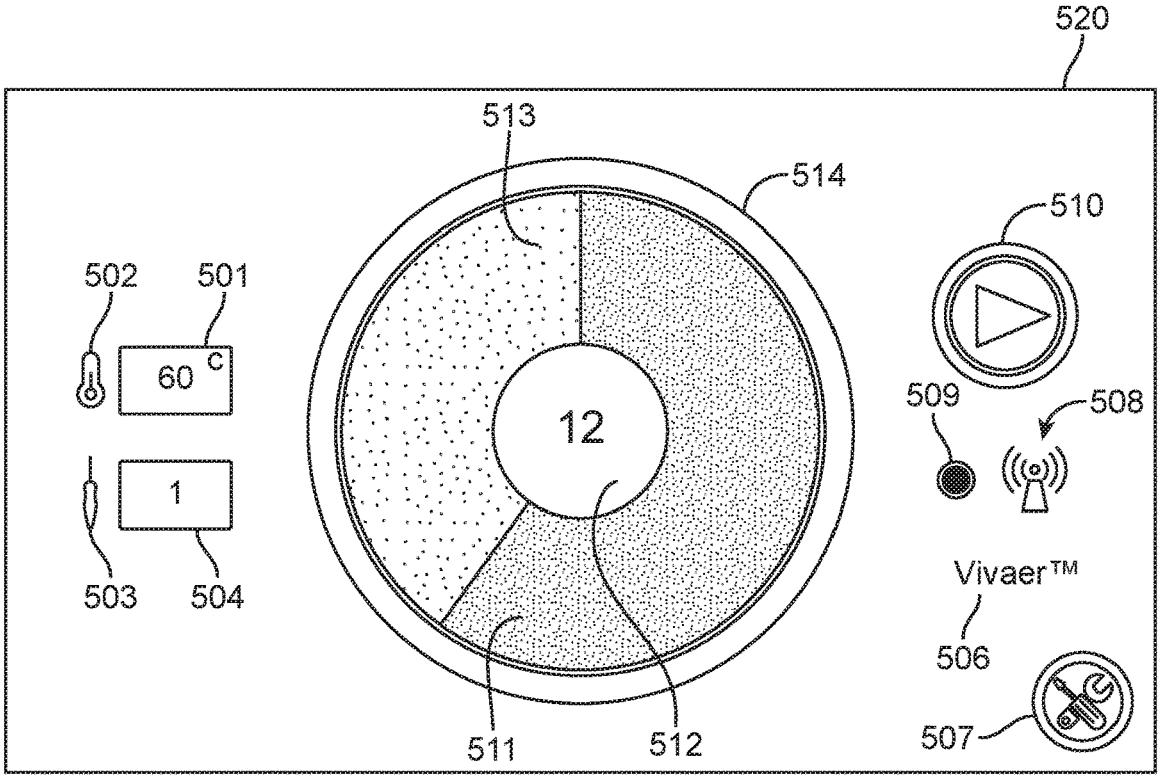
520
513
514
510
502
501
60 C
12
509
508
1
Vivaer™
503
504
506
511
512
507

FIG. 6

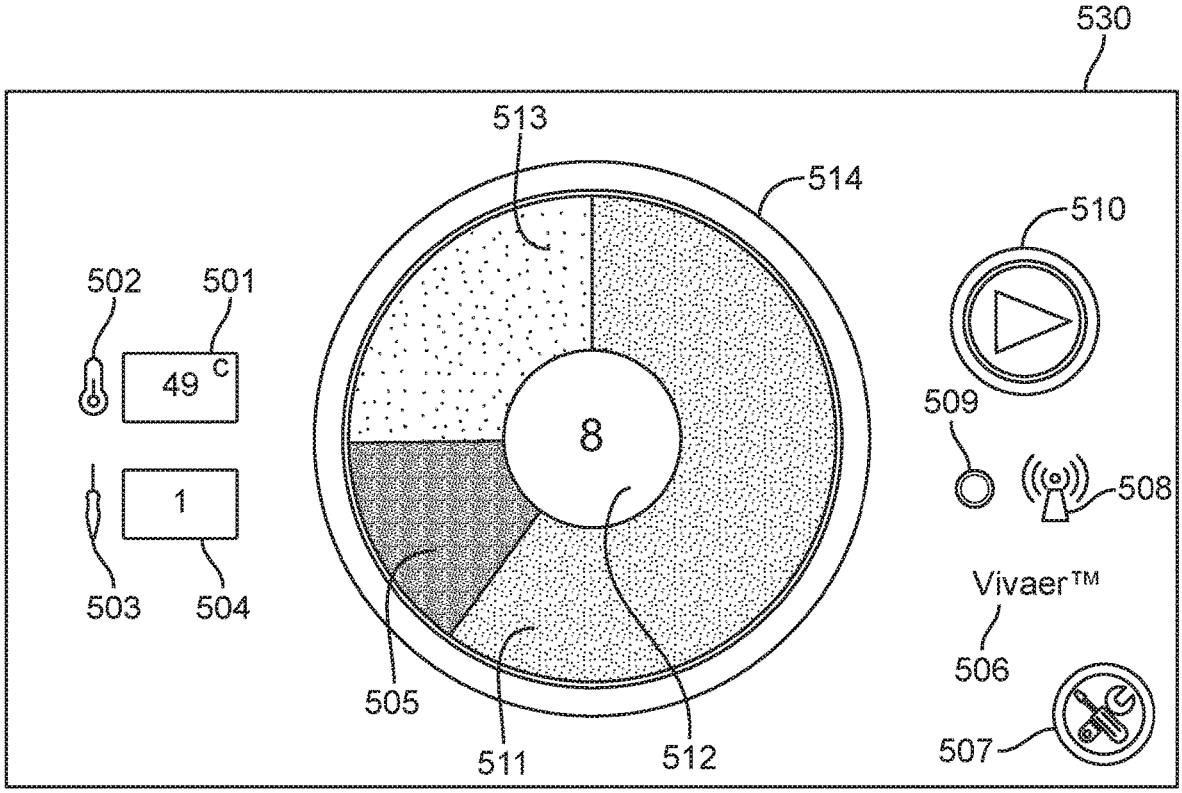
530
513
514
510
502
501
49 C
8
509
508
1
503
504
Vivaer™
506
505
511
512
507

FIG. 7

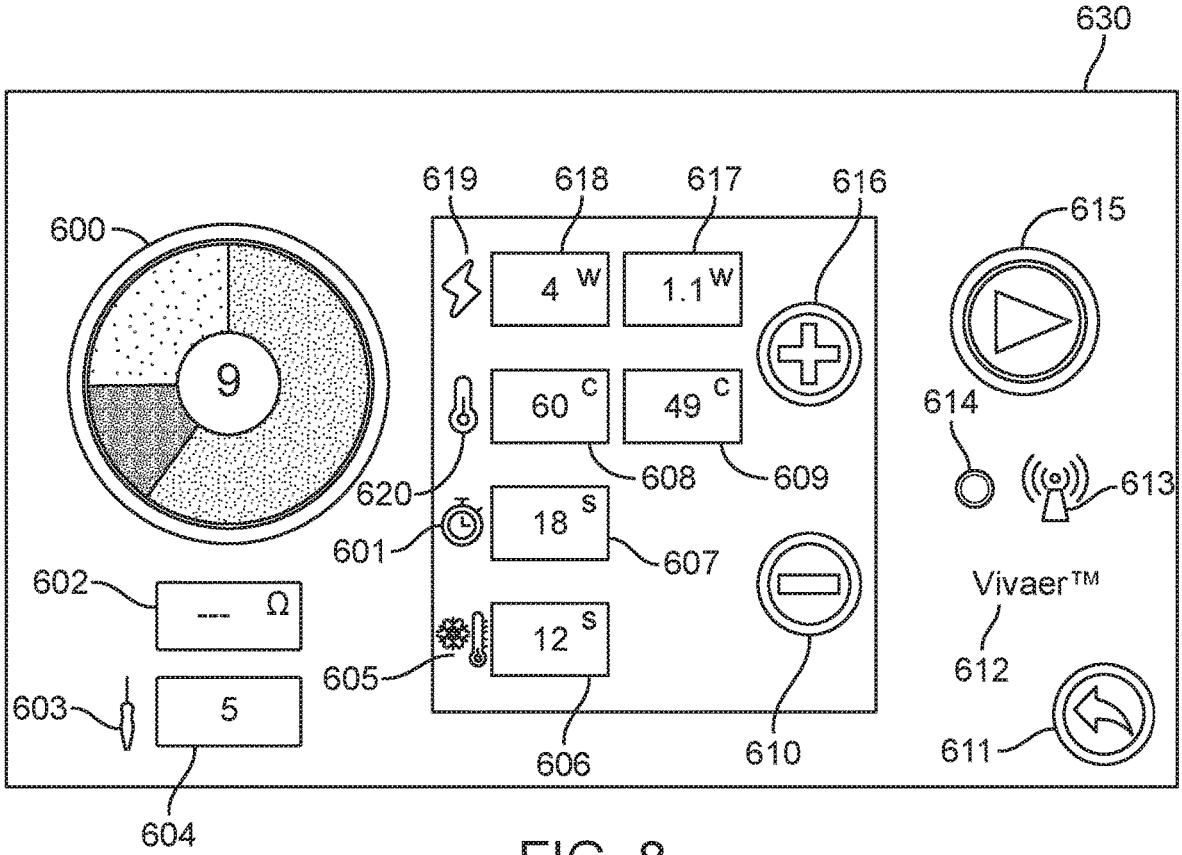
630
600
9
619
618
617
616
615
4 W
1.1 W
60 C
49 C
614
613
620
608
609
601
18 S
607
602
--- Ω
Vivaer™
605
12 S
612
603
5
606
610
611
604

FIG. 8

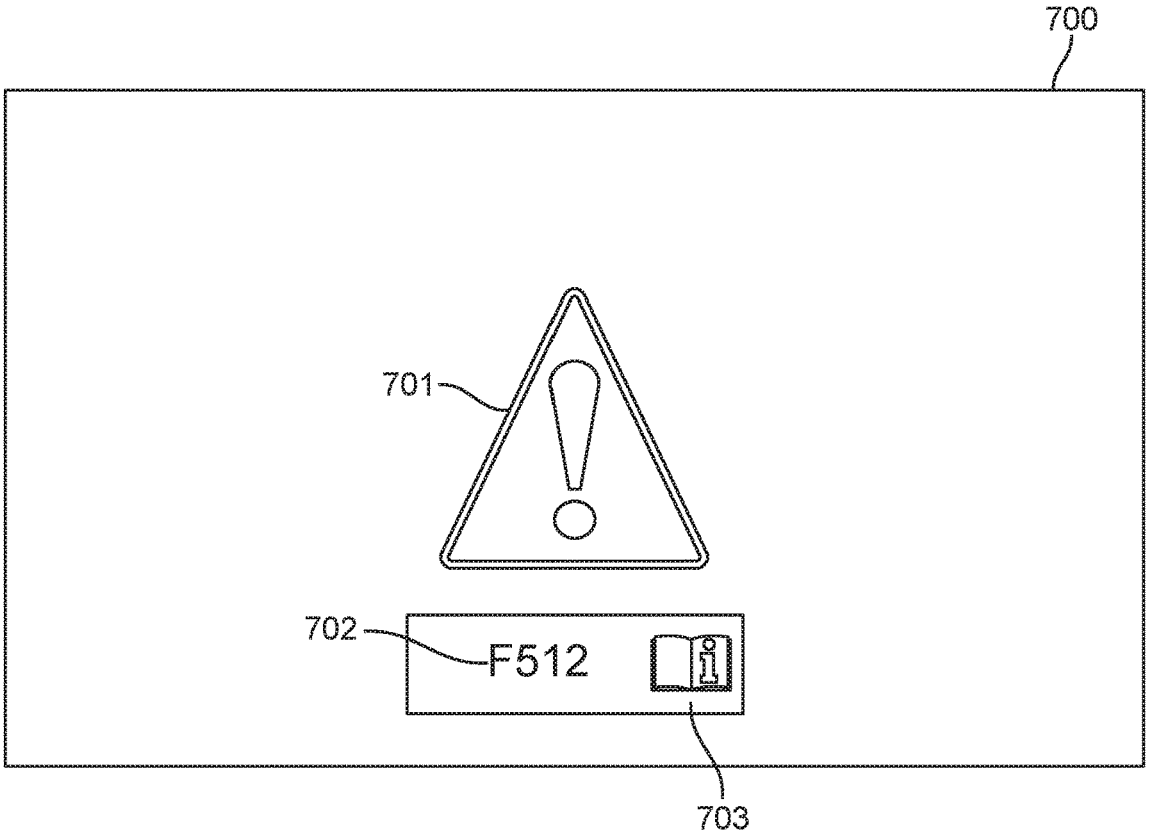

FIG. 9

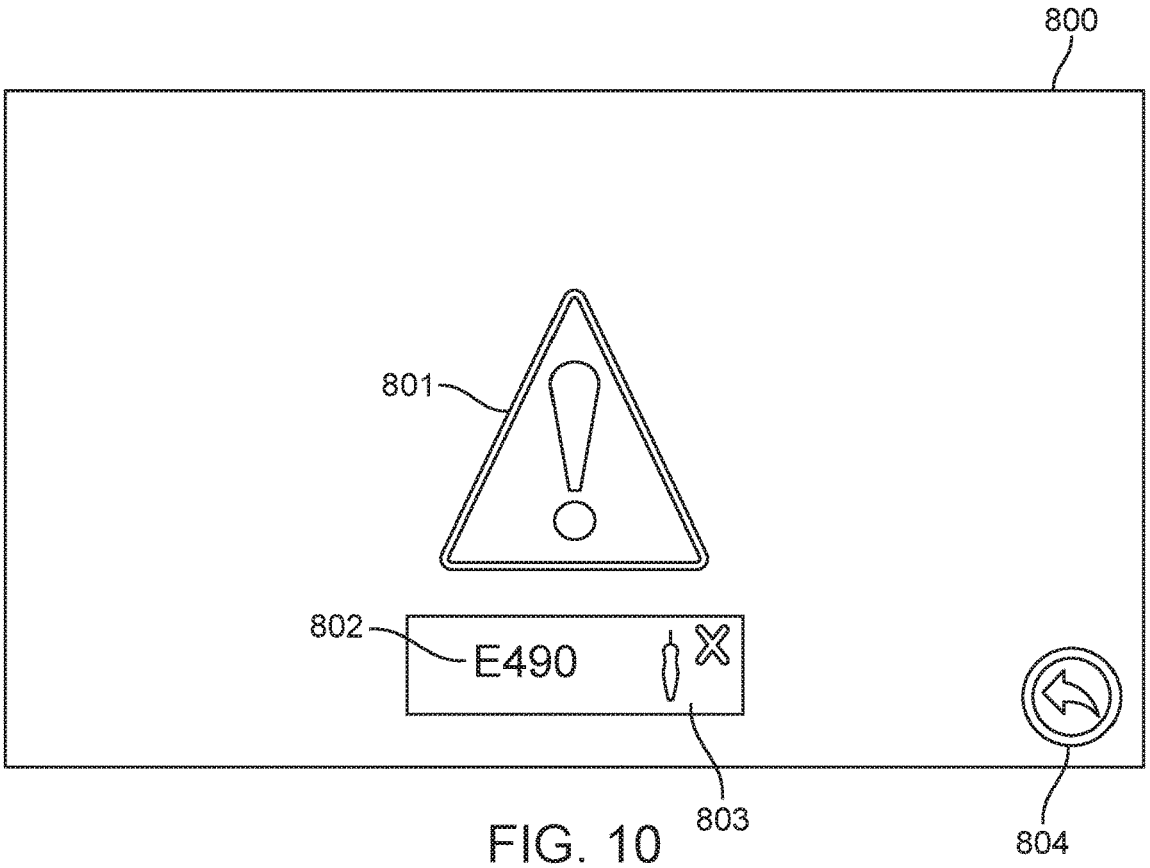

FIG. 10

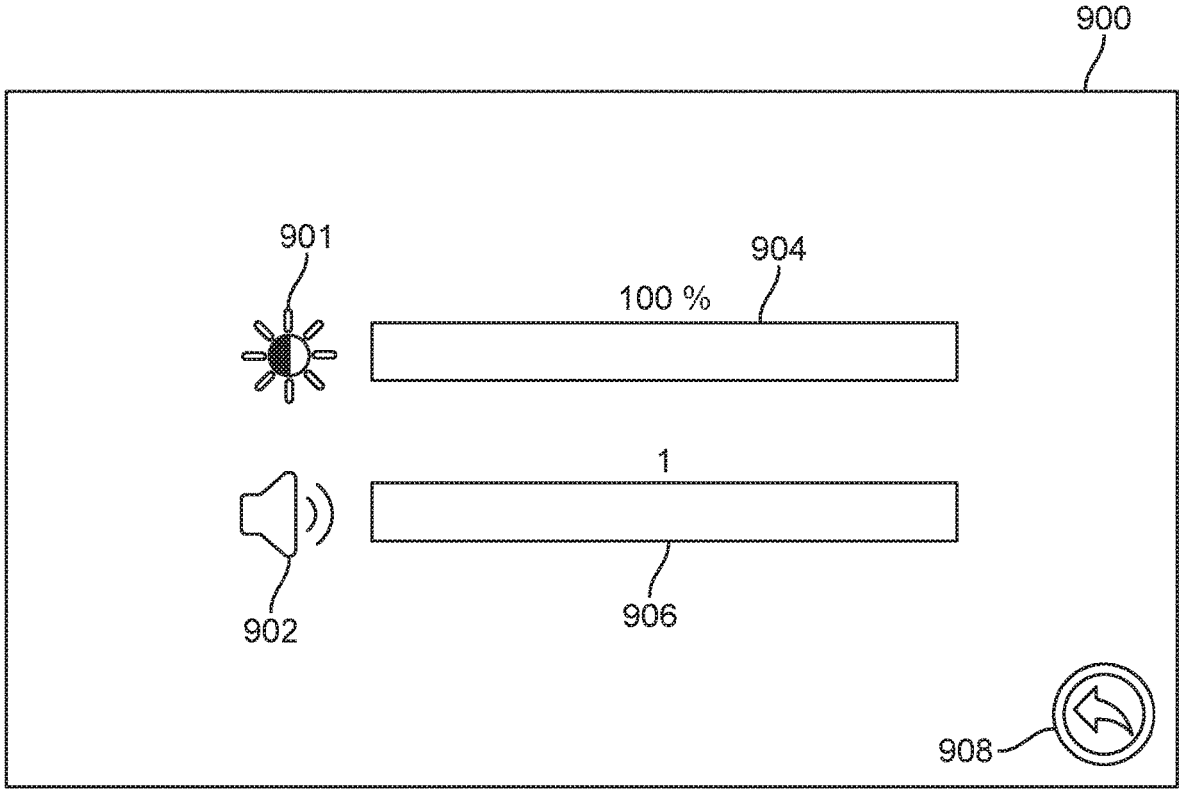

FIG. 11

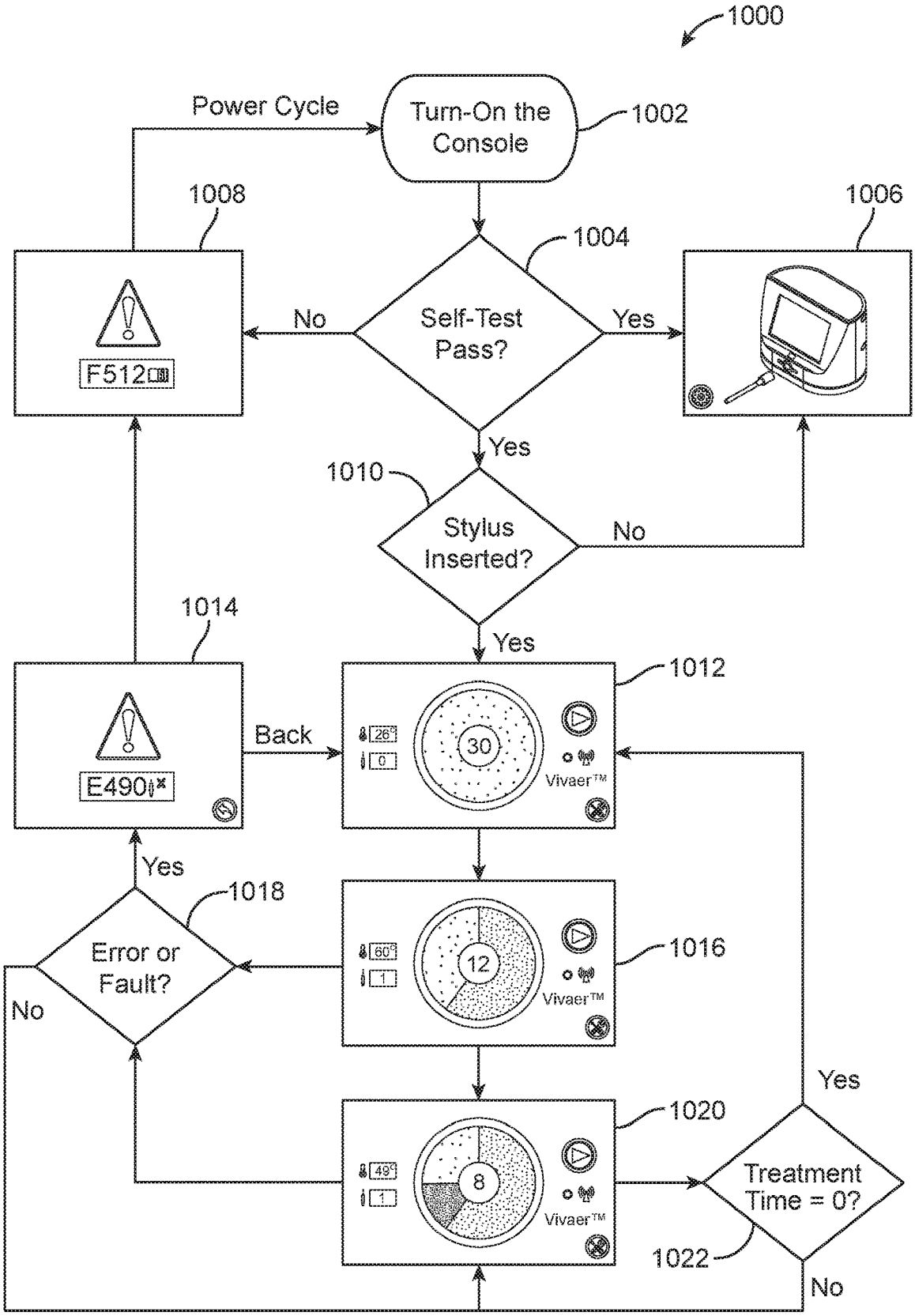
1000
Power Cycle
Turn-On the Console
1002
1008
1006
1004
No
Self-Test Pass?
Yes
F512
Yes
1010
Stylus Inserted?
No
1014
Yes
1012
Back
E490
26°
0
30
Vivaer™
Yes
1018
Error or Fault?
No
60°
1
12
Vivaer™
1016
Yes
1020
49°
1
8
Vivaer™
Treatment Time = 0?
1022
No

FIG. 12

ELECTROSURGICAL DEVICE CONSOLE

CROSS-REFERENCE TO RELATED APPLICATIONS

[0001] The present application claims priority to U.S. Provisional Patent Application Ser. No. 62/753,469, titled "Electrosurgical Device Console," filed Oct. 31, 2019, the full disclosure of which is hereby incorporated by reference.

FIELD

[0002] The present application is related to surgical devices and methods. More specifically, the application is related to an electrosurgery system console and user interface.

BACKGROUND

[0003] Surgical devices that use energy to treat tissue in the body are used for a wide variety of procedures, to treat many different conditions and injuries. The assignee of the present application, for example, has developed a number of devices, systems and methods for treating airway tissue, specifically nasal upper airway tissue in some embodiments, by delivering energy to the tissue. For example, in some embodiments, an energy delivery device is inserted into a patient's nostril to deliver energy (and sometimes mechanical force) to tissue in the nose. This type of energy delivery treatment, for example radiofrequency (RF) energy delivery, may be used to reshape cartilage and/or other structures in the nose and/or to change other properties of tissues such as nasal mucosa. The treatments may address any of a wide variety of conditions, just two examples of which are nasal valve insufficiency (which may cause difficulty breathing through the nose) and chronic rhinitis (runny nose).

[0004] Electrosurgical devices typically include some type of stylus, wand, applicator or other handheld component for applying the energy to the patient (i.e., for performing the surgical procedure) and a generator, which may sometimes be referred to as a "box" or "console." The generator is attached to the applicator via a cord, to provide energy to the applicator. In some cases, the generator may also send and/or receive signals to and from the applicator (for example, treatment algorithms, tissue temperature measurements, etc.). Although many different electrosurgical consoles have been developed over the years, it would still be advantageous to have an improved console. For example, an improved console might be specifically designed for a particular type of energy delivery device or a particular set of procedures.

BRIEF SUMMARY

[0005] This application describes various aspects and embodiments of an energy delivery system console (or "box"). More particularly, this application describes an improved user interface for an electrosurgical console/generator, which allows a physician user to monitor and alter treatment parameters for a particular treatment stylus, applicator, catheter or the like. The console is primarily described herein as a radiofrequency (RF) electrosurgical generator with a user interface/display. In alternative embodiments, however, the console, or a modified version thereof, may be part of a system that delivers other types of energy, such as but not limited to heat, laser, microwave, cryogenic cooling, DC current or ultrasound.

[0006] In one aspect of the present disclosure, a console for an electrosurgical device may include: a housing; an energy generator in the housing; a computer processor in the housing; a connector on the housing, for connecting the console with an energy delivery treatment device; a touchscreen display on the housing; and a non-transitory computer readable medium in the computer processor, containing computer-executable programming instructions for providing an active display on the touchscreen display. The active display includes a central circle, a countdown timer in the central circle for counting down a total time remaining in an energy delivery procedure, and an outer ring around the central circle. The outer ring indicates the total time remaining in the energy delivery procedure, a remaining time in an energy delivery stage of the energy delivery procedure, and a remaining time in a cooling stage of the energy delivery procedure.

[0007] In one embodiment, the energy generator is a radiofrequency (RF) generator, configured to deliver monopolar and/or bipolar RF energy to the energy delivery treatment device. In some embodiments, the outer ring changes colors in a clockwise direction to indicate elapsed time of the energy delivery procedure. Optionally, the active display may further include a start/stop button and a custom treatment button, both of which are configured to be activated by touch. Optionally, the active display may further include a temperature display, an energy on indicator, and/or a procedure count indicator, indicating a number of procedures completed using the energy delivery treatment device.

[0008] In some embodiments, the active display may further include a custom treatment button that, when activated, causes the display screen to display a custom treatment screen. The custom treatment screen may include, for example, a set cooling time window, a set power window, a set temperature window and/or a set procedure time window.

[0009] In some embodiments, the connector on the housing is configured to accept only one predefined type of energy delivery treatment device. Optionally, the non-transitory computer readable medium in the computer processor may include an energy delivery treatment device identifier for identifying the energy delivery treatment device that is connected to the console.

[0010] In another aspect of the present disclosure, an active display on a touchscreen of an electrosurgical device may include a central circle, a countdown timer in the central circle for counting down a total time remaining in an energy delivery procedure, and an outer ring around the central circle. The outer ring indicates the total time remaining in the energy delivery procedure, a remaining time in an energy delivery stage of the energy delivery procedure, and a remaining time in a cooling stage of the energy delivery procedure. The outer ring may change colors in a clockwise direction to indicate elapsed time of the energy delivery procedure and/or may include a line that moves around the outer ring in a clockwise direction to count down the total time remaining in the energy delivery procedure. All optional features described above may be included in the active display, according to various embodiments.

[0011] In another aspect of the present disclosure, a method for performing an energy delivery therapy on nasal airway tissue in a patient may involve: activating a console attached to an energy delivery stylus; advancing a distal end of the energy delivery stylus into a nostril of the patient; delivering energy from the energy delivery stylus to treat the

nasal airway tissue; and watching a display on a display screen of the console. The display on the console may include a central circle, a countdown timer in the central circle for counting down a total time remaining in the energy delivery therapy, and a moving outer ring around the central circle, configured to indicate the total time remaining in the energy delivery therapy, a remaining time in an energy delivery stage of the energy delivery therapy, and a remaining time in a cooling stage of the energy delivery therapy. Finally, the method involves removing the energy delivery stylus from the nostril after completion of the cooling stage.

[0012] In some embodiments, delivering energy involves delivering radiofrequency energy, and the energy delivery stylus is a radiofrequency stylus. In some embodiments, delivering energy involves starting the delivery of energy by touching a start/stop button on the display screen and/or depressing a foot pedal coupled with the console.

[0013] The method may also involve observing a displayed temperature, a displayed number of procedures performed with the energy delivery stylus, an energy on indicator, and/or a stylus identifier on the display screen. The method may optionally involve touching a custom treatment button on the display screen to switch to a custom treatment display and setting a temperature, a power, a therapy time, and/or a cooling time, by touching at least one control button on the custom treatment display. Ion some embodiments, the method may include viewing an error display on the display screen and touching a back button on the display screen to return to a previous screen. The method may also optionally include viewing a settings display on the display screen and adjusting brightness and/or volume of the console by touching at least one controller on the display screen.

[0014] Optionally, the method may include, before removing the energy delivery stylus from the nostril: moving the distal end of the energy delivery stylus to a different location in the nasal airway; delivering energy from the energy delivery stylus to treat nasal airway tissue at the different location; and watching the display on the display screen of the console. The method may further include repeating the moving, delivering and watching steps as often as desired to perform the energy delivery therapy on the nasal airway tissue. In some embodiments, the method may include attaching the energy delivery stylus to the console and waiting for the console to confirm that the energy delivery stylus is approved for use, where the console activates after it confirms the energy delivery stylus is approved.

[0015] These and other aspects and embodiments of the disclosure are described in further detail below, in relation to the attached drawing figures.

BRIEF DESCRIPTION OF THE DRAWINGS

[0016] FIG. **1** is a front perspective view of an RF electrosurgical system for treating airway tissue, according to one embodiment;

[0017] FIG. **2** is a rear perspective view of the console of the electrosurgical system of FIG. **1**;

[0018] FIGS. **3**A-**3**C are top, front and side views, respectively, of the console shown in FIGS. **1** and **2**;

[0019] FIG. **4** is a screenshot of a standby screen display that may be displayed on an electrosurgical console, according to one embodiment;

[0020] FIG. **5** is a screenshot of a default main screen display on an electrosurgical console, as it appears before the electrosurgery treatment has started, according to one embodiment;

[0021] FIG. **6** is a screenshot of a default main screen display on an electrosurgical console, as it appears during an RF delivery stage of an electrosurgery treatment, according to one embodiment;

[0022] FIG. **7** is a screenshot of a default main screen display on an electrosurgical console, as it appears during a cooling stage of an electrosurgery treatment, according to one embodiment;

[0023] FIG. **8** is a screenshot of a custom treatment settings screen display on an electrosurgical console, as it appears during a cooling stage of an electrosurgery treatment, according to one embodiment;

[0024] FIG. **9** is a screenshot of a fault screen display on an electrosurgical console, according to one embodiment;

[0025] FIG. **10** is a screenshot of an error screen display on an electrosurgical console, according to one embodiment;

[0026] FIG. **11** is a screenshot of a settings screen display on an electrosurgical console, according to one embodiment; and

[0027] FIG. **12** is a flow diagram of a method of performing an electrosurgical treatment, using a console as described in the present application, according to one embodiment.

DETAILED DESCRIPTION

[0028] Referring to FIG. **1**, one example of an RF electrosurgical system **100** is illustrated. As mentioned above, in alternative embodiments the electrosurgical system **100** may be modified to provide and deliver any other suitable type of energy, in addition to or instead of RF. In this example, the RF electrosurgical system **100** includes a console **102**, an RF delivery stylus **104**, and a cable **106** connecting the stylus **104** to the console **102**. The console **102** houses an RF generator, a processor, and various electronics, none of which is visible in FIG. **1**. The word "console," in this disclosure, is meant to encompass the terms "generator," "box," "controller," and any other commonly used terms to describe an electrosurgical system console or generator. The parts of the console **102** that are visible in FIG. **1** include a touchscreen display **108**, a stylus connection port **110**, an "RF ON" indicator light **112**, and a bottom ring **114**. The touchscreen display **108** serves as the main user interface for interacting with the console **102** and will be described further below. The stylus connection port **110** allows a connection end (or "connector") of the stylus **104** to be plugged into it. The stylus connection port **110** can be configured to accept only the connection end of the stylus **104** and can be configured to not accept or work with counterfeit or other devices. In some embodiments, electronics inside the console **102** may include a stylus identification safety feature that identifies the stylus **104** when it is plugged into the stylus connection port **110**. Such a safety feature may, for example, automatically shut down (or disable powering on) the console **102**, if a user tries to plug in a device other than the stylus **104**.

[0029] The RF ON indicator light **112** indicates when RF energy is being delivered through the stylus connection port **110** to the stylus **104**. The bottom ring **114**, in this embodiment, lights up when the console **102** is powered on. This lighted ring **114** is an optional feature. Both the RF ON

indicator light **112** and the lighted bottom ring **114** may have any color or colors of light. In one embodiment, for example, the RF ON indicator light **112** is blue, and the bottom ring **114** lights up with a white light. This is merely one example, however, and any suitable lighting configuration and combination of colors may be used in alternative embodiments.

[0030] FIG. **2** shows the back of the console **102**. In this embodiment, the console **102** includes an air vent **116**, a product label area **118**, a speaker **120**, an equipotential ground connection port **122**, a main power connection port **124**, a main power switch **126** and foot switch connection port **128**. The equipotential ground connection port **122** is provided at the back of the device.

[0031] FIGS. **3**A-**3**C are top, front and side views, respectively, of the console **102** shown in FIGS. **1** and **2**.

[0032] Referring now to FIG. **4**, a screenshot of one example of a standby image **200** that may be shown on the display **108** of the console **102** is illustrated. The standby image **200** may be displayed after the console **102** is powered on. In some embodiments, the console **102** may perform a power-on self-test before showing the standby image **200**. The standby image includes a console image **202**, a settings button **204** and an animated insert stylus image **206**. The animated insert stylus image **206** shows the connector end of the stylus cable **106** moving toward the console stylus connection port **110**. Thus, the image **200** graphically informs the user that the console **102** is ready for use, awaiting insertion of the connection end of the stylus cable **106** into the connection port **110**.

[0033] As mentioned above, in some embodiments, the console **102** may be programmed to identify the stylus **104** inserted into its connection port **110** and accept only specified styluses **104**, for security and patient safety purposes. For example, the console **102** may accept only one specific brand of stylus **104**. The console **102** may also be capable of determining whether a stylus **104** is new or used and may only work or activate when a new stylus **104** is inserted. This feature may be very helpful in protecting patients, since used styluses **104** may provide substandard performance. In some embodiments, the console **102** may monitor the use of a particular inserted stylus **104**, determine when the stylus **104** has completed a predetermined amount of usage, and deactivate the stylus **104** and/or the console **102** when the predetermined amount is achieved.

[0034] In some embodiments, the console **102** may permanently deactivate the stylus **104** when it has reached its maximum number of uses. For example, in a given procedure on a nasal airway of a patient, the stylus **104** might be designed to deliver 10-20 treatments of RF delivery, or more specifically in some embodiments 12-15 treatments. Each treatment may last, for example, 15-20 seconds, or more specifically 18 seconds, with 10-15 seconds of cool-down time. If a doctor administers a maximum number of treatments with a given stylus **104**, such as 15 treatments in one example, the console **102** will turn off or go into a deactivated mode and may also permanently deactivate the stylus or permanently mark it as "used." If a user tries to insert a used stylus **104** into the console **102**, the console **102** will not turn on or activate, and it may also provide the user with a signal on the screen **108**, such as "Error" or "Used Stylus" or "Unusable Stylus" or the like.

[0035] In some embodiments, as will be described further below, the console **102** may be designed for use with different types of styluses **104** for different procedures. For example, one embodiment of the console **102** may be used with one type of stylus **104** for a nasal valve remodeling procedure, a second type of stylus **104** for a chronic rhinitis treatment procedure, a third type of stylus **104** for a soft palate procedure and/or the like. When each specific type of stylus **104** is inserted, the console **102** is programmed to identify the stylus **104** and provide a treatment algorithm designed for that particular stylus type. Again, if a used or incompatible stylus **104** is inserted, the console **102** will not activate or provide energy to the stylus **104**.

[0036] Referring now to FIG. **5**, once the physician or other user has attached the stylus **104** to the console **102**, the standby image of FIG. **4** may be replaced on the display **108** by a default main screen image **500**. This main screen image **500** is what the user sees before the procedure has started. Under normal operating conditions, the user can select either default treatment settings or manual treatment settings. The default treatment settings are pre-loaded into the processor of the console **102** and do not require any additional settings inputs from the user. In some embodiments, it may be possible for the user to select from several sets of default settings. Operation under the default settings mode is described in relation to FIGS. **5**-**7**, and operation under the custom settings mode is described in relation to FIG. **8**.

[0037] FIG. **5** shows the default image **500** displayed on the display **108** of the console **102**, once a valid stylus **104** is connected. In this embodiment, the default image includes a stylus temperature indicator **501**, a temperature icon **502**, a stylus icon **503**, treatment number indicator **504**, a stylus type indicator **506**, a start/stop button **510**, an RF ON indicator light **509**, an RF icon **508**, a custom treatment button **507** and a central, circular, graphical treatment progress display **514**.

[0038] The graphical treatment progress display **514** has several portions, according to the embodiment shown in FIG. **5**. First, there is a total treatment timer **512**, which is displayed as a central circle with a counting down number, representing seconds (or alternatively minutes, or minutes and seconds) remaining in the current procedure. Here, for example, the treatment has not started yet, and the total treatment timer **512** shows a time of 30 seconds, thus indicating that at least the next tissue treatment will last 30 seconds total. Immediately surrounding the central circle total treatment timer **512** is a treatment time indication ring **513**, which acts as an indicator of elapsed and remaining time in the procedure. In the default image **500** of FIG. **5**, the treatment has not started, so the entire outer ring **513** is one initial color. The initial color of the ring **513** indicates time remaining in the treatment, which in this case takes up the entire ring **513**.

[0039] Other indicators on the screenshot image **500** also show that the treatment has not yet started. For example, the RF ON indicator light **509** is not illuminated yet, because the console **102** is not yet delivering RF energy to the stylus **104**. The treatment number indicator **504** shows that zero ("0") treatments have been performed with the stylus **104** that is currently plugged into the console **102**. And the temperature indicator **501** shows a stylus temperature of 26 degrees Celsius. To begin a treatment, the physician user will touch the start/stop button **510** on the touchscreen display **108**.

[0040] In the embodiment of FIG. **5**, the stylus **104** inserted into the console **102** is a VivAer® Nasal Airway Remodeling Stylus (www.aerinmedical.com), as indicated

by the stylus type indicator **506**. This embodiment of the console **102** may accept one or more other types of styluses **104**, for example a stylus designed for treating chronic rhinitis and/or a stylus designed for treating soft palate tissue. If such an alternative type of stylus **104** is inserted, the console **102** will identify the stylus type and indicate the type via the stylus type indicator **506**.

[0041] Referring now to FIG. **6**, a later screenshot **520** of the default settings screen is illustrated. At this stage, RF energy is being delivered from the console **102** to the stylus **104**, as indicated by the RF ON indicator light **509**. The total treatment timer **512** of the graphical treatment progress display **514** shows that 12 seconds remain in the treatment—in other words, 18 seconds of the 30-second total time have elapsed. The outer ring **513** now includes a darker RF energy delivery time portion **511**, designating the elapsed 18 seconds of RF energy delivery time. The lighter remaining portion of the ring **513** indicates the 12-second portion of the total treatment time that is still remaining. As the RF energy delivery stage of the treatment begins and progresses, the darker RF energy delivery time portion **511** sweeps clockwise around the outer ring **513**, thus taking up more and more of the outer ring **513**. In other words, the RF energy deliver indicator **511** starts at zero, at the twelve o'clock position on the ring **513**, and moves around the ring in a clockwise direction. In this embodiment, treatment time (during which RF energy is delivered) is 18 seconds, and cool down time (during which RF energy is turned off) is 12 seconds. In alternative embodiments, any suitable alternative treatment times and cool down times may be used.

[0042] Other indicators that the treatment is in progress include the temperature indicator **501**, showing a temperature of 60 degrees Celsius, and the treatment number indicator **504** showing that this is the first treatment being performed with the stylus **104** currently plugged into the console **102**.

[0043] In some embodiments, the console **102** may be activated, and RF energy delivered to the stylus **104** in either of two ways—the start/stop button **510** may be touched, or a foot pedal coupled with the console **102** may be depressed. The RF ON indicator **509** lights up when the console **102** is delivering RF power. The stylus type connected indicator **506** indicates what type of stylus **104** is connected to the console **102**, which in the example shown is a VivAer® Stylus. This indicator **506** may be useful in embodiments where the console **102** is configured for use with multiple different types of styluses. The stylus temperature indicator **501** shows the actual temperature of the distal, treatment end of the stylus **104**. The treatment number indicator **504** displays the number of the treatment currently being completed with the stylus **104** that is attached to the console **102**. Finally, the custom treatment button **507** allows the user to customize one or more treatment parameters. Touching the custom treatment button **507** will lead the user to a new display screen with different options. In alternative embodiments, the various icons and/or indicators on the default display **520** may be changed or moved. In some embodiments, one or more of the icons and/or indicators may be eliminated and/or additional indicators and/or buttons may be added.

[0044] Referring now to FIG. **7**, a third screenshot **530** of the default setting screen as displayed on the touchscreen display **108** is illustrated. At a given amount of time into the procedure, the console **102** stops delivering RF energy to the stylus **104**, and a cool down phase begins. The cool down phase is shown on the ring **513** as a differently colored or shaded segment, as compared to the RF ON segment **511**, which may be called a cool down timer indicator **505**. The cool down timer indicator **505** moves around the ring in a clockwise direction until the procedure is complete. Any amount of time remaining in the total procedure, in this case the cool down phase, is indicated by the total treatment time remaining portion of the ring **513**.

[0045] In the screenshot of the main screen image **530** shown in FIG. **7**, the current stage of treatment is illustrated as follows: The central circle total treatment timer **512** shows there are eight seconds remaining in the treatment. The RF ON indicator segment **511** and the cool down timer segment **505** show that the RF delivery portion of the treatment is complete, because the cool down timer segment **505** has started. Since the total treatment time remaining portion of the ring **513** is still visible, this shows the user that the cool down phase is still in process. In a real life scenario, the cool down timer portion **505** would also be moving clockwise, thus easily telling the user what phase the treatment was in. In this case, the total treatment time portion of the ring **513** shows that approximately one fourth of the entire treatment time still remains. The temperature of 49 degrees Celsius in the temperature window also tells the user that the console **102** is in the cooling phase, since the temperature of the stylus **104** has decreased from 60 degrees. Finally, the RF ON indicator light **509** is not illuminated. In summary, the outer ring **513** in FIG. **7** includes three, differently colored sections at this stage: (1) an RF ON treatment stage section **511**, indicating that the 18-second RF delivery stage is complete; (2) an RF-off cool down stage section displayed as the cool down timer indicator **505**, showing that a portion of the cool down stage is complete; and (3) a remaining treatment portion of the outer ring **513**, indicating that a portion of the cool down phase remains to be completed.

[0046] In various embodiments, any colors, shades, shapes, graphics and/or the like may be used for the various segments **511**, **505** of the outer ring **513**. In one embodiment, for example, the RF ON timer indicator **511** is navy blue, the cool down timer indicator **505** is gray, and the total treatment time remaining portion **513** is light blue. Any other colors may be used, however, in alternative embodiments. In another alternative embodiment, the entire ring **513** may be one color, and a line that acts as a timer may move clockwise around the ring **513**, similar to a long hand on a clock. In a variation on such an embodiment, the color of the ring **513** behind the moving line may change. Thus, the ring **513** and the segments **511**, **505** may have any suitable size, color scheme or configuration.

[0047] Additionally, the default (or custom) settings of the console **102** may have any suitable ranges and combinations for the various parameters of the console **102**. For example, one timing default setting may have a total treatment time of 30 seconds, an RF ON time of 18 seconds, and a cooling time of 12 seconds. This is but one example, however, and any number of other time settings may alternatively be used. Total treatment time may be in minutes, for example, and each segment of the treatment may be measured in seconds and/or minutes. A default temperature may also be set for RF delivery, for example 60 degrees Celsius as the maximum temperature. Again, any suitable default settings may be set in various embodiments.

[0048] Referring now to FIG. **8**, as just described, the physician or other user can choose to access a custom treatment screen **630** by touching the custom treatment button **507** on the initial default screen **500** (FIG. **5**). In the embodiment shown, the custom treatment screen **630** includes a graphical treatment progress display **600**, which is smaller but otherwise the same as the graphical treatment progress display **514** of the default screen **500**. The custom treatment screen **630** also includes a timer icon **601**, an impedance display **602**, a stylus icon **603**, a number of treatments indicator **604**, a cooling icon **605**, a set cooling time window **606**, a set RF ON time window **607**, a set temperature window **608**, an actual temperature indicator **609**, a down button **610**, a back button **611**, a stylus type indicator **612**, an RF icon **613**, an RF ON indicator **614**, a start/stop button **615**, an up button **616**, an actual power delivery indicator **617**, a set power window **618**, an RF power icon **619** and a temperature icon **620**. As with the previously described default screen **500**, the icons and/or indicators of the custom treatment screen **630** may be moved, changed and/or eliminated, according to various alternative embodiments.

[0049] Through the custom treatment screen **630**, the user can adjust the power (power window **618**), temperature (temperature window **608**), treatment time (RF on time window **607**) and/or cool down time (cooling time window **606**), by touching any one of the set windows and then touching the up button **616** and/or the down button **610** to adjust a given value. To set power, for example, the user may touch the power window **618** and then adjust the temperature by pressing the up button **616** or the down button **610**. The console **102** may be configured to only allow adjustments within ranges. For example, the power on the console **102** may be selected at 3 W, 4 W or 5 W in one embodiment. Maximum stylus temperature may be selected in a range of 50 degrees Celsius to 70 degrees Celsius in one embodiment. RF energy delivery time (RF ON time) may be selected for between 6 seconds and 18 seconds, in 2-second increments, and cooling time may be selected for between 0 seconds and 12, in 3-second increments, in one embodiment. Any other suitable ranges and combinations of ranges may be used, in alternative embodiments, and those provided here are merely examples.

[0050] For the information of the user, the impedance display **602** and stylus usage count **604** are also displayed. The back button **611** can be touched to return to the default screen **500** (FIG. **5**). During treatment, the actual RF power **617** and temperature reading **609** are also shown. In alternative embodiments of the custom treatment display screen **630**, one or more icons, indicators, buttons and/or windows may be moved, changed or eliminated. In some embodiments, the console **102** might not include any custom settings or custom setting displays. Such a console **102** may be configured to only provide standard treatment parameters.

[0051] Referring now to FIG. **9**, in some embodiments, the console **102** may be programmed to display a fault screen **700** when a serious or fatal error of the system **100** occurs. The fault screen **700** may include, for example, a fault error symbol **701** that indicates a serious error has occurred, rendering the console **102** unusable. The fault screen may also include an error code **702**, indicating what kind of error has occurred, and a "refer to IFU" (instructions for use) symbol **703**. The fault error symbol **701** may be any color or combination of colors, such as a red triangle with a black exclamation point. In some embodiments, after the fault screen **700** appears, the console **102** may only be used after the user turns the console **102** off and turns it back on again.

[0052] Referring now to FIG. **10**, in some embodiments, the console **102** may be programmed to display an error screen **800** when a non-fatal error of the system **100** occurs. The error screen **800** may include, for example, a caution symbol **801** that indicates an error has occurred. The error screen may also include an error code **802**, indicating what kind of error has occurred, an error symbol **803**, and/or a back button **804**. In the example of FIG. **10**, the error symbol **803** indicates a problem with the stylus **104** that is inserted in the console **102**, as might occur for example if a used or incompatible stylus is inserted. The caution symbol **801** may be any color or combination of colors, such as a yellow triangle with a black exclamation point. In this embodiment, the user may touch the back button **804** to return to the previous screen being used when the error occurred, and the user may fix the error at that screen.

[0053] FIG. **11** is a screenshot of a settings screen **900**, which may be provided on the display **108** of the console **102**. In this embodiment, the settings screen **900** includes an adjust brightness icon **901**, an adjust volume icon **902**, a sliding bar brightness control **904** and a sliding bar volume control **906**. The brightness control **904** and the volume control **906** may have any color or combination of colors. In some embodiments, a numerical indication of brightness and volume may also be included. The settings screen **900** also includes a back button **904** to allow the user to return to a previous screen. The settings screen **900** may be available in some embodiments, even if the user is not permitted to select custom treatment settings.

[0054] Referring now to FIG. **12**, a method **1000** of using the console **102** of the electrosurgery system **100** is illustrated. First, the user turns on **1002** the console **102**. The console **102** performs a self-test **1004**. If the self-test passes, the console **102** displays the standby screen **1006**. If the console **102** fails the self-test, the fault screen is displayed **1008**. In some embodiments, the fault screen can only be cleared by power cycling the console **102** to repeat the self-test routine. Next, assuming the self-test is passed, the user plugs the stylus **104** into the console **102**. If the correct stylus is inserted **1010**, the console **102** shows the default main screen **1012**. The user presses the start/stop button or a foot switch, and the RF energy delivery portion of the treatment starts **1016**, followed by the cooling portion **1020**. When the treatment is completed **1022**, the screen returns to the default main screen **1012**. If an error occurs during treatment **1018**, the error screen is shown **1014**. The user can press the back button on the error screen to return to the default main screen **1012**. If the error is fatal, the screen changes to the fault screen **1008**. At various points the in method **1000**, the user may also select the custom treatment screen (FIG. **8**) by pressing the custom treatment button **507** on the default screen. In alternative embodiments, various screens and/or method steps may be changed or eliminated.

[0055] Although this application is believed to be complete and accurate, any suitable changes may be made to any of the described embodiments and features described above, without departing from the scope of the invention.

We claim:

1. A console for an electrosurgical device, the console comprising:

a housing;
an energy generator in the housing;
a computer processor in the housing;
a connector on the housing, for connecting the console with an energy delivery treatment device;
a touchscreen display on the housing; and
a non-transitory computer readable medium in the computer processor, containing computer-executable programming instructions for providing an active display on the touchscreen display, the active display comprising:
a central circle;
a countdown timer in the central circle for counting down a total time remaining in an energy delivery procedure; and
an outer ring around the central circle, configured to indicate the total time remaining in the energy delivery procedure, a remaining time in an energy delivery stage of the energy delivery procedure, and a remaining time in a cooling stage of the energy delivery procedure.

2. The console of claim **1**, wherein the energy generator comprises a radiofrequency (RF) generator configured to deliver at least one of monopolar or bipolar RF energy to the energy delivery treatment device.

3. The console of claim **1**, wherein the outer ring is configured to change colors in a clockwise direction to indicate elapsed time of the energy delivery procedure.

4. The console of claim **1**, wherein the active display further comprises:
a start/stop button; and
a custom treatment button, wherein the start/stop button and the custom treatment button are configured to be activated by touch.

5. The console of claim **1**, wherein the active display further comprises at least one of a temperature display, an energy on indicator, or a procedure count indicator, indicating a number of procedures completed using the energy delivery treatment device.

6. The console of claim **1**, wherein the active display further comprises a custom treatment button that, when activated, causes the display screen to display a custom treatment screen.

7. The console of claim **6**, wherein the custom treatment screen comprises at least one of a set cooling time window, a set power window, a set temperature window or a set procedure time window.

8. The console of claim **1**, wherein the connector on the housing is configured to accept only one predefined type of energy delivery treatment device.

9. The console of claim **1**, wherein the non-transitory computer readable medium in the computer processor further comprises an energy delivery treatment device identifier for identifying the energy delivery treatment device that is connected to the console.

10. A method for performing an energy delivery therapy on nasal airway tissue in a patient, the method comprising:
activating a console attached to an energy delivery stylus;
advancing a distal end of the energy delivery stylus into a nostril of the patient;
delivering energy from the energy delivery stylus to treat the nasal airway tissue;
watching a display on a display screen of the console, wherein the display comprises:
a central circle;
a countdown timer in the central circle for counting down a total time remaining in the energy delivery therapy; and
a moving outer ring around the central circle, configured to indicate the total time remaining in the energy delivery therapy, a remaining time in an energy delivery stage of the energy delivery therapy, and a remaining time in a cooling stage of the energy delivery therapy; and
removing the energy delivery stylus from the nostril after completion of the cooling stage.

11. The method of claim **10**, wherein delivering energy comprises delivering radiofrequency energy, and wherein the energy delivery stylus comprises a radiofrequency stylus.

12. The method of claim **10**, wherein delivering energy comprises starting the delivery of energy by at least one of touching a start/stop button on the display screen or depressing a foot pedal coupled with the console.

13. The method of claim **10**, further comprising observing at least one of a displayed temperature, a displayed number of procedures performed with the energy delivery stylus, an energy on indicator, or a stylus identifier on the display screen.

14. The method of claim **10**, further comprising:
touching a custom treatment button on the display screen to switch to a custom treatment display; and
setting at least one of a temperature, a power, a therapy time, or a cooling time, by touching at least one control button on the custom treatment display.

15. The method of claim **10**, further comprising:
viewing an error display on the display screen; and
touching a back button on the display screen to return to a previous screen.

16. The method of claim **10**, further comprising:
viewing a settings display on the display screen; and
adjusting at least one of brightness or volume of the console by touching at least one controller on the display screen.

17. The method of claim **10**, further comprising, before removing the energy delivery stylus from the nostril:
moving the distal end of the energy delivery stylus to a different location in the nasal airway;
delivering energy from the energy delivery stylus to treat nasal airway tissue at the different location; and
watching the display on the display screen of the console.

18. The method of claim **17**, further comprising repeating the moving, delivering and watching steps as often as desired to perform the energy delivery therapy on the nasal airway tissue.

19. The method of claim **10**, further comprising:
attaching the energy delivery stylus to the console; and
waiting for the console to confirm that the energy delivery stylus is approved for use, wherein the console activates after it confirms the energy delivery stylus is approved.

* * * * *