UNITED STATES PATENT AND TRADEMARK OFFICE

BEFORE THE PATENT TRIAL AND APPEAL BOARD

AERIN MEDICAL INC.
Petitioner,

v.

NEURENT MEDICAL LTD.
Patent Owner.

Case No. IPR2025-01125
U.S. Patent No. 12,089,889

PATENT OWNER'S PRELIMINARY RESPONSE

TABLE OF CONTENTS

Page

I. INTRODUCTION 1

II. BACKGROUND AND OVERVIEW OF THE CHALLENGED PATENT ...4

III. THE PERSON OF ORDINARY SKILL IN THE ART 7

A. Definition of POSITA 7

B. The Board Should Discount or Disregard Testimony from Petitioner's Declarant.....10

IV. CLAIM CONSTRUCTION 14

V. PETITIONER HAS NOT SHOWN IT IS REASONABLY LIKELY TO PREVAIL ON ANY OF THE PROPOSED GROUNDS 14

A. All Grounds: The Petition Does Not Sufficiently Allege Obviousness of the Claimed Outcome 14

1. Ground I: The Petition Fails to Sufficiently Assert the Claimed Outcome Would Have Been Obvious Over Townley Alone.....16

2. Grounds II-III: The Petition Fails to Sufficiently Assert the Claimed Outcome Would Have Been Obvious Over Wolf-003 in Combination with Wolf-290.....21

B. Ground I: The Petition Does Not Articulate a Motivation to Combine Different Embodiments of Townley With a Reasonable Expectation of Success 25

C. Ground I: The Petition Does Not Sufficiently Identify Electrodes That "Extend" From Townley's Device 27

D. Ground III: The Petition Fails to Adequately Allege Motivation to Combine Wolf-003 and Angeles With a Reasonable Expectation of Success 28

VI. CONCLUSION.....32

TABLE OF AUTHORITIES

Page(s)

CASES

ActiveVideo Networks, Inc. v. Verizon Communications, Inc.,
694 F.3d 1312 (Fed. Cir. 2012) 24

Arendi S.A.R.L. v. Apple Inc.,
832 F.3d 1355 (Fed. Cir. 2016) 15, 16, 20

Ashland Oil, Inc. v. Delta Resins & Refractories, Inc.,
832 F.3d 1355 (Fed. Cir. 2016) 19

Carella v. Starlight Archery & Pro Line Co.,
804 F.2d 135 (Fed. Cir. 1986) 19, 23

DyStar Textilfarben GmbH & Co. Deutschland KG v. C.H. Patrick Co.,
464 F.3d 1356 (Fed. Cir. 2006) 23

Halliburton Energy Services, Inc., v. Schlumberger Technology Corporation,
IPR2017-02072, Paper 11 (P.T.A.B. Apr. 12, 2018) 31

In re Kotzab,
217 F.3d 1365 (Fed. Cir. 2000) 20

In re Stepan Co.,
868 F.3d 1342 (Fed. Cir. 2017) 26

Incyte Corp. v. Concert Pharms., Inc.,
PGR2021-00006, Paper 68 (P.T.A.B. May 11, 2022).....13

Kohler Co. v. Delta Faucet Co.,
IPR2024-00700, Paper 32 (P.T.A.B. Oct. 1, 2025).....13, 23

KSR International, Inc. v. Teleflex Inc.,
550 U.S. 398 (2007).....31

Kyocera Senco Industrial Tools, Inc. v. ITC,
22 F.4th 1369 (Fed. Cir. 2022) 11, 13

Microsoft Corp. v. Enfish, LLC,
662 Fed. App'x 981 (Fed. Cir. 2016) 15, 16

Neurent Medical Inc. v. Aerin Medical Inc.,
IPR2024-00277, Paper 41 (P.T.A.B. July 11, 2025) 8, 9

Neurent Medical Inc. v. The Foundry LLC,
IPR2024-00279, Paper 41 (P.T.A.B. July 21, 2025) 7, 8, 9

Neurent Medical Inc. v. The Foundry LLC,
IPR2024-00280, Paper 41 (P.T.A.B. July 21, 2025) 7, 8

Neurent Medical Inc. v. The Foundry LLC,
IPR2024-00669, Paper 43 (P.T.A.B. July 21, 2025) 7, 8

Qualcomm Inc. v. Apple Inc.,
134 F.4th 1355 (Fed. Cir. 2025) 22

Reactive Surfaces Ltd., LLP v. Toyota Motor Corp.,
IPR2019-00867, Paper 6 (P.T.A.B. Sep. 18, 2019).....26

SEB S.A. v. Montgomery Ward & Co.,
594 F.3d 1360 (Fed. Cir. 2010) 10

*Securus Technologies, Inc. v. Glob. Tel*Link Corp.*,
701 Fed. App'x 971 (Fed. Cir. 2017) 24, 25, 31

TQ Delta, LLC v. CISCO Sys., Inc.,
942 F.3d 1352 (Fed. Cir. 2019) 18, 23

Upjohn Co. v. Mova Pharmaceutical Corp.,
225 F.3d 1306 (Fed. Cir. 2000) 19, 23

Xerox Corp. v. ByteMark, Inc.,
IPR2022-00624, Paper 9 (P.T.A.B. Aug. 24, 2022).....14, 15, 18, 23

STATUTES

35 U.S.C. § 312(a)(3).....15

35 U.S.C. § 314(b) 14

REGULATIONS

37 C.F.R. § 42.65(a).....15, 19

I. INTRODUCTION

The Petition is insufficient to demonstrate a reasonable likelihood Petitioner would prevail and institution should be denied. The claims of U.S. Patent No. 12,089,889 (the "Challenged Claims" of the "'889 patent") are directed to methods of treating the nasal conditions rhinitis, congestion, and/or rhinorrhea with claimed devices to achieve a specific outcome. The patent explains that while prior art devices were ineffective at addressing the outcome—improved nasal breathability—the invention captures methods that address that problem in the art. All Challenged Claims recite methods that achieve this outcome. The Challenged Claims also recite certain aspects of the claimed device, and a subset also include limitations related to a console unit.

The Petition fails at the threshold because it does not provide the type of analysis necessary to show a reasonable likelihood Petitioner would prevail. Rather than evidence from prior art patents or publications, the Petition relies on conclusory attorney argument and nearly verbatim declarant testimony to supply a treatment outcome limitation Petitioner ***admits*** is not taught by the prior art. And though the Petition acknowledges it must combine teachings to purportedly arrive at the Challenged Claims, the Petition fails to provide the relevant motivation to combine with a reasonable expectation of success, resorting instead to mere generalities and

conclusions, some of which materially overstate the cited references. Compounding these deficiencies in analysis, the Petition is supported by a declaration from someone who ***does not claim to have been a POSITA***, and who does not claim to have any experience or knowledge regarding treatment—a limitation of every Challenged Claim.

The Board and Federal Circuit have been clear that the types of analysis the Petition here offers cannot sustain a finding of obviousness. A Petitioner cannot supply a missing limitation through conclusory expert testimony, fail to offer reasoned analysis with rational underpinning to support motivation or reasonable expectation, or rely solely on testimony from a declarant that does not claim to have the relevant expertise. Having nonetheless chosen to draft its challenge in this cursory way and using these impermissible techniques, the Petitioner should not, indeed cannot, be afforded a do-over at trial. Though the Petition suffers from many deficiencies, these threshold issues require that institution be denied.

First, across all Grounds, though the Petition ***admits*** the cited art does not state its devices achieve the claimed treatment outcome, the Petition fails to offer evidence or reasoning that they would have been obvious. Instead, the Petition simply relies on Petitioner's say-so, and that of its declarant (who does not claim to have been a POSITA or have experience with treatment).

Second, the Petition does not offer sufficient motivations to combine with a reasonable expectation of success. In Ground I, the Petition seeks to combine Townley with the purported knowledge of a POSITA, but does not even mention "motivation" or "reasonable expectation," let alone explain why or how a POSITA would expect the claimed outcome. The Petition also mixes and matches different figures of Townley, with no analysis as to why. In Grounds II and III, the Petition combines Wolf-003 and Wolf-290, but does not address motivation or expectation regarding the specific claimed outcome, focusing instead on the broader conditions at issue. And in Ground III, the Petition argues combining of the device of Wolf-003 with the console of Angeles, but fails to argue a specific motivation and reasonable expectation that Wolf-003's device, in particular, would successfully work with that console. Here, again, its declarant's opinions merely parrot the Petition, in many cases nearly verbatim, and do not provide sufficient basis for institution.

Third, in Ground I, the Petition relies on conclusory argument and unexplained annotations to argue Townley teaches electrodes that "extend." This argument is not only unexplained and incomplete, but is inconsistent with Petitioner's other Grounds, which specify a distinction between protruding, recessed, and flush electrodes.

For at least these reasons, and as further discussed below, the Board should deny institution.

II. BACKGROUND AND OVERVIEW OF THE CHALLENGED PATENT

At the time of the inventions in the Challenged Patent, "[m]any people suffer[ed] from breathing issues as a result of various health-related problems," including rhinitis—which is "the fifth most common chronic disease in the United States." Ex.1001, 1:28-32. People suffering from rhinitis often have difficultly breathing through their nose and have sleep problems that significantly reduce their quality of life. *Id*., 1:38-48. Although there existed other methods to treat some of the symptoms of rhinitis, such as nose breathing aids and pharmacotherapy, they were ineffective at operating as a long-term method of treating rhinitis and addressing nasal breathability. *Id*., 1:61-2:16. Additionally, surgical options that existed at the time were also ineffective, as they did not address rhinorrhea and came with substantial risks. *Id*., 2:17-27. The inventors of the Challenged Patent recognized that existing rhinitis treatment methods could either cause damage to patients or fail to adequately address problems related to nasal breathability caused by the disease, and created a unique treatment device that is effective, minimally invasive, improves nasal breathability, and addresses sleep problems associated with rhinitis. *See id*., 2:31-5:9.

The Challenged Patent is a result of the inventors' work to create a device that can effectively treat rhinitis and address the nasal breathability problems associated with the disease. *Id*. The Challenged Patent discloses and claims "devices that are capable of highly conforming to anatomical variations within a nasal passage and nasal cavity while providing unprecedented control and guidance to an operator so that an operator can perform an accurate, minimally invasive, and localized application of energy to one or more target sites within the nasal passage and nasal cavity to cause multipoint interruption of neural signal[s] without causing collateral damage or disruption to other neural structures." *Id*., 2:61-3:02. The approach described by the Challenged Patent "will be able to provide long-term symptom relief" and "improve a patient's nasal breathability…." *Id*., 3:10-12, 9:60-10:6.

In particular, the Challenged Patent discloses a combination of unique components, including an electrode array "configured to deliver energy to specific target sites within the nasal passage and nasal cavity, in conjunction with neuromodulation provided by the multi-segment end effector." *Id.*, 9:24-28. The multi-segment end effector is also "configured to complement anatomy at multiple different locations within the nasal cavity" and "allows for targeting the autonomic supply to the nasal turbinates…." *Id.*, 9:27-29, 9:49-50. The inventor's device allows "two separate target sites to receive treatment simultaneously, thereby

reducing the need to reposition the end effector." *Id.*, 10:24-29. The multi-segment end effector is also retractable and expandable and, "once delivered to the one [or] more target sites within the nasal cavity, can expand to a specific shape and/or size corresponding to anatomical structures within the nasal cavity and associated with the target sites." *Id.*, 10:34-40.

Figure 4, shown below, depicts an exemplary treatment device disclosed by the Challenged Patent.

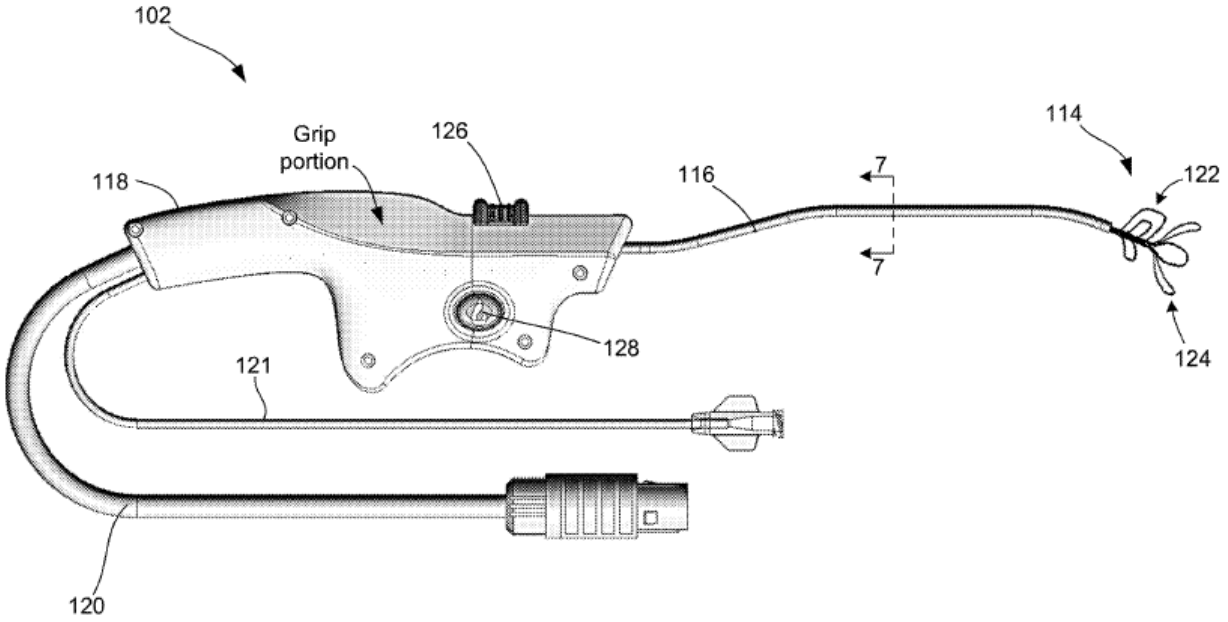

FIG. 4

Ex.1001, FIG. 4

III. THE PERSON OF ORDINARY SKILL IN THE ART

A. Definition of POSITA

All Challenged Claims recite methods of treating one or more symptoms of rhinitis, congestion, and/or rhinorrhea with the devices recited in the claims. *See* Ex.1001, cl. 1, et seq. A person of ordinary skill in the art ("POSITA") would thus have had education and experience related at least to such treatment and devices. Specifically, a POSITA would have had (1) a Doctor of Medicine (M.D.) or at least a bachelor of science degree in biomedical engineering or a related discipline, (2) at least three years of experience in the clinical use, design, development, and/or testing of medical devices that deliver energy to tissue, and (3) knowledge and experience in treating nasal conditions, or access to a person with that knowledge and experience. Less work experience may be compensated by a higher level of education, and vice versa.

Patent Owner's proposed POSITA definition is the same as that adopted by the Board in an IPR addressing patents exclusively licensed by Petitioner. Thus, in IPR2024-00279, IPR2024-00280, and IPR2024-00669 (the "Foundry IPRs"), the Board adopted the above definition when the claims at issue recited methods of treating nasal conditions with treatment devices. *Neurent Medical Inc. v. The Foundry LLC*, IPR2024-00279, Paper 41, 11-12 (P.T.A.B. July 21, 2025); *Neurent*

Medical Inc. v. The Foundry LLC, IPR2024-00280, Paper 41, 11 (P.T.A.B. July 21, 2025; *Neurent Medical Inc. v. The Foundry LLC*, IPR2024-00669, Paper 43, 15 (P.T.A.B. July 21, 2025). There, the Board found that, in view of the scope of the method claims at issue, clinical use and/or testing and treatment experience/access were properly included as part of the POSITA definition. *E.g.*, *Neurent Medical Inc. v. The Foundry LLC*, IPR2024-00279, Paper 41, 11-12 (P.T.A.B. July 21, 2025). As the Board explained in additional IPRs against Petitioner's patents—which were likewise directed to methods of treating nasal conditions using certain devices—where "claims…recite a method of treating a nasal airway in a patient and include steps performed by a clinician…" that "suggests that clinical expertise would be of particular relevance…." *Neurent Medical Inc. v. Aerin Medical Inc.*, IPR2024-00277, Paper 41, 11-12 (P.T.A.B. July 11, 2025). Here, the claims at issue recite, among other limitations, "A method for treating at least one of rhinitis, congestion, and rhinorrhea…" and "reducing or eliminating one or more symptoms associated with at least one of rhinitis, congestion, and rhinorrhea to improve nasal breathability of the patient." Ex.1001, cl. 1. Patent Owner's definition, which includes, *inter alia*, a Doctor of Medicine as a POSITA, experience with clinical use and/or testing, and

knowledge/experience or access regarding nasal condition treatment, provides a POSITA that can address the full claim scope here. [1]

Petitioner's definition, in contrast, does not account for the full scope of the Challenged Claims. Petitioner proposes only that a POSITA would have education

---

[1] Other POSITA definitions may also adequately account for claims directed to methods of treatment using certain claimed devices. For example, in IPRs against Aerin Medical's method of treatment patents, a separate panel of the Board adopted a definition of POSITA that included (1) a Doctor of Medicine (M.D.) or at least a bachelor of science degree in engineering or a related discipline and (2) at least three years of experience in the clinical use, design, development, and/or testing of medical devices, including medical devices that deliver energy to tissue. *Neurent Medical Inc. v. Aerin Medical Inc.*, IPR2024-00277, Paper 41, 9-10 (P.T.A.B. July 11, 2025). Patent Owner proposes the definition from the Foundry IPRs, which includes a degree in "biomedical" engineering and treatment knowledge/experience/access, because the Board adopted it there in part to address arguments by The Foundry (which was a real-party-in-interest along with Petitioner) and it would provide additional clarity here. *Neurent Medical Inc. v. The Foundry LLC*, IPR2024-00279, Paper 41, 11-12 (P.T.A.B. July 21, 2025)..

in engineering (whether biomedical, mechanical, or electrical) and industry or research experience, without accounting for experience with or access to one with knowledge or experience with treatment. Pet., 8. The claims, however, do not just require a device, but a method that produces a specific treatment outcome. *See, e.g.*, Ex.1001, cl. 1 ("treating at least one of rhinitis, congestion, and rhinorrhea" and "reducing or eliminating one or more symptoms…to improve nasal breathability of the patient."). The definition of a POSITA must thus account for this claim scope. Patent Owner's proposal should be adopted because it includes relevant clinical and treatment experience, whereas Petitioner's does not.

B. The Board Should Discount or Disregard Testimony from Petitioner's Declarant

The Board should discount or disregard the Petition's reliance on the declaration of Dr. Daniel van der Weide (Ex.1003), whom neither Petitioner ***nor*** Dr. van der Weide claim qualified as a POSITA as of the time of the invention and who—despite the method claims at issue—has no stated experience with or knowledge about treating nasal conditions (and who does not claim to have had access to someone who did).

Although a declarant's experience need not precisely match the art at issue, one offering expert testimony must have at least ordinary skill in the art to provide relevant and reliable testimony. *See, e.g.*, *SEB S.A. v. Montgomery Ward & Co.*, 594

F.3d 1360, 1373 (Fed. Cir. 2010); *Kyocera Senco Indus. Tools, Inc. v. ITC*, 22 F.4th 1369, 1376-77 (Fed. Cir. 2022). Despite citing Dr. van der Weide's declaration over 150 times, the Petition ***does not argue*** that Dr. van der Weide is an expert in the relevant field or would have qualified as a POSITA at the time of the invention. Indeed, the Petition does not discuss his credentials or background at all. Like the Petition, ***nowhere in his declaration*** does Dr. van der Weide claim that he would have qualified as a POSITA. Nor does Dr. van der Weide state that he has experience with or knowledge regarding nasal anatomy, clinical applications of medical devices for treating nasal conditions, or access to a person(s) who did.

In his declaration, Dr. van der Weide explains that he has degrees in electrical engineering and has served as a professor of electrical and computer engineering and received a courtesy appointment in the Radiology, Biomedical Engineering, and Materials Science Departments at the University of Wisconsin-Madison. Ex.1003, ¶¶8-9. His CV indicates his work at Wisconsin-Madison involved "[m]icrofabricated high-frequency electromagnetic sensors." Ex.1022, 1. Dr. van der Weide's declaration itself does not explain the substance of his work as a professor in any of these positions or when it occurred (*i.e.*, before or after the patent). Dr. van der Weide also explains his professional experience, which includes "design and consulting services for electrical measurements at high frequencies,"

and "medical devices," including for microwave-based tissue ablation, surgical navigation systems, and cancer imaging. Ex.1003, ¶10. And he explains that he has worked with other companies in various areas ranging from "ultrawideband antennas" to "cellular telephones" to "automatic testing equipment." *Id.* Dr. van der Weide makes no claim that any of these experiences involved treating nasal conditions. Indeed, he nowhere explains how his experience relates to the claimed nasal treatment invention.

Under the proper definition of a POSITA—which, as discussed in the prior section, includes either treatment experience/knowledge or, at least access to someone with knowledge and experience treating nasal conditions—Petitioner has not demonstrated in the Petition or in his declaration, that Dr. van der Weide can offer testimony from the perspective of a POSITA. In particular, though the Petition relies on Dr. van der Weide for opinions regarding treatment and the relevant anatomy, he has no claimed expertise or even stated professional exposure to those topics. The Board should thus discount or disregard his opinions, including regarding "Technology Background" that addresses "Nasal Anatomy and Rhinosinusitus" and "Treatment of Target Tissue In The Nasal Cavity To Address Symptoms and Conditions of Rhinosinusitus," Ex.1003, ¶¶40-47, and his conclusions regarding purported obviousness of clinical treatment outcome. *See,*

e.g., Ex.1003, ¶¶74, 113, 215, 216, 262. *See, e.g.*, *Kyocera Senco*, 22 F.4th at 1376-77 ("To offer expert testimony from the perspective of a skilled artisan in a patent case—like for claim construction, validity, or infringement—a witness must at least have ordinary skill in the art. Without that skill, the witness' opinions are neither relevant nor reliable."); *Incyte Corp. v. Concert Pharms., Inc.*, PGR2021-00006, Paper 68, 6-9 (P.T.A.B. May 11, 2022) (finding declarant unqualified to offer opinions regarding subjects in which he did not have knowledge and experience).

Tellingly, and perhaps unsurprisingly, Dr. van der Weide's (conclusory) opinions mirror, in many cases nearly verbatim, the arguments in the Petition. For example, his "Technical Background" addresses the same substance as the Petition, with added block quotations. *Compare* Pet., 9-10 *with* Ex.1003 ¶¶39-47. And as further discussed in Section V, below, Dr. van der Weide's conclusory opinions regarding a certain treatment outcome limitation are nearly the same as the conclusory assertions in the Petition. As the Board has explained, and as further discussed below, conclusory expert testimony that mirrors the Petition cannot form the basis for a reasonable likelihood of prevailing. *See, e.g.*, *Kohler Co. v. Delta Faucet Co.*, IPR2024-00700, Paper 32, 34, 59 (P.T.A.B. Oct. 1, 2025) (giving "little weight" to an expert's testimony "because it 'merely repeats, verbatim, the conclusory assertion for which it is offered to support,' and 'does not cite to any

additional supporting evidence or provide any technical reasoning [in] support'"); *Xerox Corp. v. ByteMark, Inc.*, IPR2022-00624, Paper 9 (P.T.A.B. Aug. 24, 2022) (precedential).

Accordingly, the Board should discount or disregard the proffered testimony of Dr. van der Weide in support of the Petition, in particular as it relates to the treatment elements of the Challenged Claims.

IV. CLAIM CONSTRUCTION

Petitioner does not identify any claim term for construction. Pet., 8. Solely for purposes of this Preliminary Response, Patent Owner does not believe any term requires construction. Patent Owner reserves the right to raise claim construction issues should this proceeding be instituted or in parallel court proceedings.

V. PETITIONER HAS NOT SHOWN IT IS REASONABLY LIKELY TO PREVAIL ON ANY OF THE PROPOSED GROUNDS

Institution should be denied because Petitioner has not established a reasonable likelihood it will prevail on any ground. 35 U.S.C. § 314(b).

A. All Grounds: The Petition Does Not Sufficiently Allege Obviousness of the Claimed Outcome

IPR should not be instituted because Petitioner has failed to sufficiently articulate—for any Ground—a sufficient basis to find that the outcome of the claims would have been obvious. The Petition ***admits*** that the outcome limitation of each challenged claim is ***not*** taught by the primary reference in each Ground, but offers

only conclusory assertions that such limitation would have been obvious. This is insufficient, and institution should be denied.

The Petition must establish, "with particularity … the grounds on which the challenge to each claim is based, and the evidence that supports the grounds for the challenge to each claim." 35 U.S.C. § 312(a)(3). Obviousness cannot be established "by mere conclusory statements; instead, there must be some articulated reasoning with some rational underpinning." *Microsoft Corp. v. Enfish, LLC*, 662 Fed. App'x 981, 989 (Fed. Cir. 2016) (quotation marks and citation omitted). The Federal Circuit has also "repeatedly warn[ed] that references to 'common sense'—whether to supply a motivation to combine or a missing limitation—cannot be used as a wholesale substitute for reasoned analysis and evidentiary support." *Arendi S.A.R.L. v. Apple Inc.*, 832 F.3d 1355, 1362 (Fed. Cir. 2016). Nor can conclusory statements of a proffered expert that merely repeat the assertions of the Petition substitute for reasoned analysis and evidence. *See, e.g.*, *Xerox Corp. v. ByteMark, Inc.*, IPR2022-00624, Paper 9 (P.T.A.B. Aug. 24, 2022) (precedential); 37 C.F.R. § 42.65(a) ("Expert testimony that does not disclose the underlying facts or data on which the opinion is based is entitled to little or no weight.").

As detailed below, the Petition runs afoul of each of these fundamental principles.

1. Ground I: The Petition Fails to Sufficiently Assert the Claimed Outcome Would Have Been Obvious Over Townley Alone

All of the challenged claims recite methods that achieve a specific outcome, namely, "improv[ing] nasal breathability of the patient." *See, e.g.*. Ex.1001, cl 1. The Petition admits that Townley, the primary reference for Ground I, ***does not state*** its device or method achieves this outcome. *E.g.*, Pet., 13 (Townley "does not specifically state…improv[ing] a patient's nasal breathability"). Instead, the Petition argues (in merely conclusory fashion) that achieving this outcome as the claims require "would have been obvious…." *Id.*, 13, 27. This is insufficient for multiple reasons.

First, attorney argument, conclusory declarant testimony, and purported "common sense" arguments are insufficient to supply a limitation missing from the prior art. *See, e.g.*, *Microsoft*, 662 Fed. App'x at 989; *Arendi*, 832 F.3d at 1362. That is what Petitioner has offered here.

Specifically, Petitioner argues that because Townley's method treats rhinitis, congestion, and/or rhinorrhea, it "would have been obvious" that Townley's method would improve the specific symptom of impaired nasal breathability. Pet., 13, 27. In support, Petitioner simply (1) asserts that impaired nasal breathability was a known ***symptom*** of rhinitis; (2) offers its declarant's say-so that Townley would

purportedly have addressed this symptom; and (3) invokes supposed common sense of a layman. *Id.*, 13, 27. This does not provide the required reasoned analysis or evidence to support obviousness.

As an initial matter, teachings that nasal breathability is a ***symptom*** of rhinitis, and thus a problem, are not sufficient to support that a particular method (like that in Townley) would successfully ***treat*** the symptom. As the Challenged Patent makes clear, not all rhinitis treatment methods treat all symptoms. *See* Ex.1001, 2:31-35 (prior art rhinitis treatment methods "fail to adequately treat the underlying symptoms"), 9:7-12; *see also* Ex.1024 (cited by Petitioner), 1:41-50, 2:53-60 (acknowledging prior art treatments are "rarely completely effective" and that "need exists for a method and device for clearing obstructed nasal passageways"). Thus, the Petition's citation to prior art explanations that nasal breathability was a symptom of rhinitis (*see* Pet. 27 (citing Ex.1004, [0003] (rhinitis symptoms); Ex.1024, Abstract, 4:18-32, 7:18-22 (same)); Pet. 51 (citing Ex.1001, 1:38-60 (same); Ex.1004, [0003] (same); Ex.1019, [0004] (same); Ex.1020, [0002]-[0003] (same); Ex.1024, 4:18-32, 7:18-22 (same))), is not enough to support that the particular prior art method in Townley would reasonably be expected ***to address*** that symptom. The omission of any reasoning or evidence to support that conclusion is stark here, where the Petition ***admits*** that Townley does not itself state its methods would achieve the

claimed outcome.

Absent other evidence, the Petition cites to its declarant, who repeats (nearly verbatim) the same bare conclusion of purported "obviousness.". Pet., 13 (citing Ex.1003, ¶74), 27 (citing Ex.1003, ¶113). But like the Petition, Dr. van der Weide simply details known symptoms of rhinitis and then asserts that successfully treating those symptoms with Townley's method would purportedly have been obvious. Ex.1003, ¶¶74, 113. His declaration does not support this assertion with adequate reasoning or evidence. It does ***not*** cite any prior art patent or printed publication. *Id.* And as discussed in Section III.B, Dr. van der Weide does not even profess to have relevant experience or expertise with the claimed treatments (or access to someone who does).

Such bare conclusions from a declarant that a claim limitation missing from a prior art reference would have been obvious cannot sustain a finding of obviousness. *See, e.g.*, *TQ Delta, LLC v. CISCO Sys., Inc.*, 942 F.3d 1352, 1358 (Fed. Cir. 2019) ("Conclusory expert testimony does not qualify as substantial evidence."). As the Board held in *Xerox Corp. v. ByteMark, Inc.*, IPR2022-00624, Paper 9 (P.T.A.B. Aug. 24, 2022) (precedential), mere allegation that a person of ordinary skill in the art "would find [a limitation] obvious" is insufficient where the Petitioner does not provide "sufficient evidence or persuasive reasoning to support" its assertion. *Id.*,

14. And a declarant's mere repetition of the Petition's argument is not enough. *Id.*, 15; *see also* 37 C.F.R. § 42.65(a) ("Expert testimony that does not disclose the underlying facts or data on which the opinion is based is entitled to little or no weight."); *Upjohn Co. v. Mova Pharm. Corp.*, 225 F.3d 1306, 1311 (Fed. Cir. 2000) ("'Lack of factual support for expert opinion to factual determinations, however, may render the testimony of little probative value in a validity determination.'") (quoting *Ashland Oil, Inc. v. Delta Resins & Refractories, Inc.*, 776 F.2d 281, 294 (Fed. Cir. 1985)); *Carella v. Starlight Archery & Pro Line Co.*, 804 F.2d 135, 138 (Fed. Cir. 1986) ("Although in some circumstances unsupported oral testimony can be sufficient to prove prior knowledge or use, it must be regarded with suspicion and subjected to close scrutiny."). Petitioner offers only such impermissible conclusory testimony, which nearly verbatim parrots the Petition, here.

Petitioner also resorts to a "common sense" argument, stating that "even laymen" would purportedly have recognized Townley's method would improve nasal breathability. Pet., 27. Petitioner's argument, which appears in a three-word parenthetical, is again conclusory and unsupported. Petitioner's only citation following this assertion is to its declarant, who offers no opinion regarding what a lay person would purportedly understand. *Id.*; Ex.1003, ¶113. Petitioner's common-sense argument is otherwise unsupported by any evidence, example, or reasoned

analysis, and is therefore improper and insufficient. *Arendi*, 832 F.3d at 1362.

Second, Ground I is further deficient because despite acknowledging Townley does not teach all claim limitations and arguing obviousness based on Townley combined with the understanding of a POSITA, Pet., 12-13, the Petition does not argue a motivation to alter or modify Townley or that a POSITA would have had a reasonable expectation of success in using Townley's method to achieve the claimed outcome. Indeed, the words "motivation" and "reasonable expectation" ***do not appear*** in Ground I at all.

Thus, even if the Petition were based on evidence or reasoning supporting that a POSITA understood the claimed outcome could be achieved in the prior art (it is not), it is deficient because it does not connect any such evidence or reasoning ***to Townley***. More specifically, the Petition does not argue how or why a POSITA would have been motivated to use Townley to achieve the claimed outcome or why a POSITA would reasonably expect Townley to successfully do so. "Even when obviousness is based on a single prior art reference, there must be a showing of a suggestion or motivation to modify the teachings of that reference." *In re Kotzab*, 217 F.3d 1365, 1370 (Fed. Cir. 2000). Because it fails to do so, Ground I should be denied.

2. Grounds II-III: The Petition Fails to Sufficiently Assert the Claimed Outcome Would Have Been Obvious Over Wolf-003 in Combination with Wolf-290

Like in Ground I, Petitioner admits that the prior art that makes up Grounds II and III does not disclose achieving the claimed outcome. *E.g.*, Pet., 49 ("…Wolf-003 does not expressly state that its systems, devices and methods…treat RCR or that improved nasal breathability would be realized."). The analysis the Petition offers to fill this gap fails for the same reasons as Ground I and more.

First, like Ground I, Petitioner gap-fills the art in Grounds II and III with impermissible conclusory attorney argument and testimony. In fact, Petitioner relies on its (insufficient) Ground I analysis as support that this limitation would have purportedly been obvious, even though the prior art references in the grounds do not overlap. *See, e.g.*, Pet., 51. For the reasons discussed for Ground I, the Petition's conclusory argument and its declarant's copy-cat statements are insufficient to support that it would have been obvious that the specific prior art references in the grounds would have successfully achieved the specific outcome of the claims. *See* Section V.A.1. They also improperly seek to supply a missing limitation through attorney argument and declarant testimony. *Id.*

Grounds II-III, however, are deficient for additional reasons. Unlike Townley (Ground I), Petitioner admits that Wolf-003 ***does not*** even disclose that it treats

rhinitis, congestion, or rhinorrhea broadly, but only post-nasal drip syndrome or upper airway cough syndrome, specifically. Pet., 49-50. While the Petition argues that the symptoms of these syndromes are also symptoms of rhinitis, congestion and/or rhinorrhea, *see* Pet., 49-52, it ***does not*** sufficiently support an argument that treating those syndromes will also improve nasal breathability. Petitioner's argument is akin to arguing that because an apple is a fruit and an orange is fruit, teaching of an apple teaches an orange. This is faulty logic insufficient to support that treating one symptom would teach treatment of another.

The Petition also relies on statements in the Challenged Patent at 5:36-52 and 5:53-6:14 as purportedly confirming that the energy treatments of Wolf-003 "would be expected to treat symptoms of RCR." Pet., 49-50. This is inaccurate but also improper. This passage refers to "the [present] invention" of the Challenged Patent as treating symptoms of RCR to improve nasal breathability, ***not*** the prior art, and does not state that any prior art method, including Wolf-003, would be expected to treat symptoms of RCR or achieve the same result. Regardless, even if the cited passage were applicant admitted prior art (it is not), AAPA has been found not to be a proper basis for asserting obviousness in IPR. *See, e.g.*, *Qualcomm Inc. v. Apple Inc*., 134 F.4th 1355, 1364-65 (Fed. Cir. 2025).

With respect to nasal breathability, Petitioner makes the conclusory statement

that treating post nasal drip syndrome or upper airway cough syndrome would improve nasal breathability, but cites ***nothing*** in support other than its declarant's testimony. Pet., 66 (citing Ex.1003, ¶262). Petitioner's declarant, in turn, offers no more than his say-so to support his argument. Ex.1003, ¶262. And again, Petitioner's declarant's lack of support is stark given he does not claim to have any relevant treatment experience or expertise (or even exposure to someone who does). *See* Section III.B. His testimony is therefore, again, insufficient. *See, e.g.*, *Kohler*, IPR2024-00700, Paper 32, 34, 59; *Xerox Corp.*, IPR2022-00624, Paper 9; *TQ Delta*, 942 F.3d at 1358; *Upjohn Co.*, 225 F.3d at 1311; *Carella*, 804 F.2d at 138.

Second, though Petitioner discusses motivation to combine and reasonable expectation of success in Grounds II-III, it addresses the wrong motivation and expectation. For multi-reference obviousness, Petitioner must show a POSA "would have been motivated to combine the prior art ***to achieve the claimed invention*** [with] a reasonable expectation of success." *DyStar Textilfarben GmbH & Co. Deutschland KG v. C.H. Patrick Co.*, 464 F.3d 1356, 1360 (Fed. Cir. 2006) (emphasis added). Petitioner, however, argues about the alleged obviousness of using Wolf-003 to treat rhinitis, congestion and/or rhinorrhea generally, but not the claimed nasal breathability outcome specifically. This is not enough.

With respect to motivation, Petitioner argues that it was "obvious to use Wolf-

003's SDMs to treat RCR" because a POSITA would purportedly have been motivated to "us[e] Wolf-003's SDMs to treat conditions beyond PNDS and UCNS…." Pet., 50. This argument, however, does not address a motivation to ***improve nasal breathability*** as claimed. In addition, Petitioner's alleged motivations (to provide additional treatments to a larger population and reduce cost/development time) are also too general to support obviousness. As the Federal Circuit has explained, mere suggestion that a POSITA would have wanted to build something better, cheaper, or with more features that would make it more attractive to customers is not sufficient to provide a motivation tied to the specific combination of prior art references. *ActiveVideo Networks, Inc. v. Verizon Commc'ns, Inc.,* 694 F.3d 1312, 1328 (Fed. Cir. 2012); *see also Securus Techs., Inc. v. Glob. Tel*Link Corp.*, 701 Fed. App'x 971, 977 (Fed. Cir. 2017) (agreeing with Board conclusion petitioner did not show motivation to combine when it did not "explain how or why the skilled artisan would combine the teachings of [the prior art]"). The Petition's argument that a POSITA would want to use a device to treat more symptoms in more patients is not tied to the limitations or art at issue.

With respect to reasonable expectation of success, the Petition focuses solely on "a reasonable expectation of success in treating RCR…." Pet., 51. It offers no specific argument as to why a POSITA would reasonably expect that the devices or

methods of Wolf-003 would improve nasal breathability, specifically.

Petitioner's reliance on Wolf-290 does not remedy any of these deficiencies, but in fact confirms the fault in Petitioner's analysis. Petitioner generally argues that because Wolf-290 would treat rhinitis, Wolf-003 would. Pet., 50-51. But not only does this argument not address the specific claimed outcome, it is inconsistent with Petitioner's separate acknowledgement that Wolf-003 and Wolf-290 treat ***different*** nasal symptoms. Pet., 10-11, 49-51. Petitioner has offered no reasoning or evidence to support its apparent assertion that devices and methods that treat any individual symptom of rhinitis, congestion, or rhinorrhea can simply be swapped or combined and achieve the same results as another, let alone different results. "Such short-cut logic would lead to the conclusion that any and all combinations of elements known in [a] broad field would automatically be obvious, without the need for any further analysis." *Securus Techs., Inc.*, 701 Fed. App'x at 977. That is not the law.

Because the Petition fails to articulate a motivation to combine the prior art references to achieve the ***claimed outcome*** with a reasonable expectation of success, it is insufficient and should be denied.

B. Ground I: The Petition Does Not Articulate a Motivation to Combine Different Embodiments of Townley With a Reasonable Expectation of Success

In different parts of Ground I, Petitioner relies on different Townley figures,

without articulating a motivation to combine them with a reasonable expectation of success. For example, for Claim 1, Petitioner cites Figure 2 for elements 1a-1 and 1a-2, and Figures 4, 5A-G, and 11A-D for elements 1a-3, 1b, 1c. It cites MEEE 212 (from Figure 2) for claims 1, 2, and 15, and Figures 4, 5, and 11 for claims 1, 15, 16, and 17.

When combining multiple embodiments from the same reference, the Petitioner must show a motivation to combine the different embodiments and a reasonable expectation of success doing so. *See Reactive Surfaces Ltd., LLP v. Toyota Motor Corp.*, IPR2019-00867, Paper 6, 8-9 (P.T.A.B. Sep. 18, 2019) (denying institution in part because "Petitioner has not explained sufficiently why a person of ordinary skill in the art would have combined the separate embodiments of [a single reference]"); *In re Stepan*, 868 F.3d 1342, 1346 n.1 (Fed. Cir. 2017) ("there must be a motivation to [combine multiple embodiments from a single reference] and a reasonable expectation [of success], otherwise a skilled artisan would not arrive at the claimed combination"). The Petition does not. Instead, it simply jumps from Figure 2 to other Figures and back without explaining why or articulating a motivation to use the Figure 4, 5, or 11 embodiments together with Figure 2 with a reasonable expectation of success. This additional deficiency requires non-institution of Ground I.

C. Ground I: The Petition Does Not Sufficiently Identify Electrodes That "Extend" From Townley's Device

All Challenged Claims require electrodes that "extend[]" from the axis of the device shaft. *See* Ex.1001, cl. 1[b], 1[c]. The Petition does not adequately allege that Townley discloses this limitation.

For elements 1[b] and 1[c], Petitioner's argument as to why Townley purportedly teaches electrodes that "extend" is limited to repeating the claim language and drawing arrows on Townley's figures. Pet., 20-25. Its declarant offers no more than this, simply repeating the claim language and arguing it is met. *See* Ex.1003, ¶¶96-104.[2] This is insufficient, as neither Petitioner's argument nor its annotations show that any cited electrode "extends," as opposed to being flush or recessed. Petitioner itself draws a distinction between extending or protruding and flushed or recessed electrodes, emphasizing in Ground II that Wolf-003 teaches electrodes that "***protrude from*** the treatment portion 350," Pet., 60-61 (citing

[2] Petitioner also argues that a POSITA would have understood that Townley would want its electrodes to direct energy in different directions because the nasal space is irregular. Pet., 24 (citing Ex.1003, ¶102), but this argument (which cites nothing more than its expert's say-so), does not address whether the electrodes protrude from or are flush or recessed with the device.

Ex.1005, [0153], bold, underline, and italic in original), in contrast to being "recessed from [or] flush with" the treatment portion. *See id.* (no emphasis in original). Having itself drawn a distinction between types of electrodes, Petitioner's bare-bones analysis of the prior art is insufficient, and Ground I should not be instituted.

D. Ground III: The Petition Fails to Adequately Allege Motivation to Combine Wolf-003 and Angeles With a Reasonable Expectation of Success

In Ground III, Petitioner argues that it would have been obvious to combine the device of Wolf-003 with the console of Angeles, but fails to adequately explain the basis for a purported motivation to combine or reasonable expectation of success. The Petition thus does not show a reasonable likelihood Petitioner will prevail with respect to Ground III.

As the Petition acknowledges, Wolf-003 "does not provide implementation details for its control system." *See* Pet., 79-82. The Petition thus argues that a POSITA would have used the console of Angeles with Wolf-003's device. As purported motivation to combine and reasonable expectation of success, Petitioner argues (1) that Angeles's console provides several purported benefits; (2) and that Angeles's console "may be used with a wide variety of devices…including devices developed by Aerin…including Wolf-003's device." Pet., 80. This is not enough to

show a motivation to combine Angeles with Wolf-003 with a reasonable expectation of success for several reasons.

First, the Petition overstates Angeles's disclosure, which nowhere is specifically connected to Wolf-003. Petitioner relies on two paragraphs of Angeles to argue Angeles may be used with "Aerin devices" "including Wolf-003's device." Pet., 80. The cited paragraphs of Angeles, however, do ***not*** say it would necessarily work with ***any*** Aerin device and make no specific connection to Wolf-003. Thus, in paragraph 3, Angeles states that Aerin "has developed a number of devices, systems and methods," but does not connect those devices with Angeles's console or reference Wolf-003. Ex.1007, [0003]. In fact, in the next paragraph (which the Petition omits), Angeles states consoles may be designed only for certain devices noting "an improved console might be specifically designed ***for a particular type of energy delivery device*** or a ***particular set of procedures***." *Id.*, [0004]. Petitioner also cites paragraph 40 of Angeles, which refers to a Figure 5 embodiment with the VivAer® Nasal Airway Remodeling Stylus. Pet., 80 (citing Ex.1007, [0040]). The Petition, however, does not cite or refer to Angeles Figure 5. Nor does the Petition allege that Wolf-003 (based on an application filed four years prior to Angeles with non-overlapping inventors) relates to the VivAer product. Angeles states that the Figure 5 console may accept "other types of styluses," but does not specify which

ones. Ex.1007, [0040].[3]

Thus, the conclusory statements of the Petition are not supported by the cited portions of Angeles. This is insufficient to satisfy Petitioner's burden to articulate the reasoning for its Grounds in the Petition.

Second, without a stated connection between Wolf-003 and Angeles in the art, the Petition does not meet its burden to articulate a rationale underlying a motivation to combine Wolf-003 with the console of Angeles with a reasonable expectation of success. The Petition does not provide the requisite reasoning ***how or why*** Wolf-003 specifically would be expected to work with Angeles's console. Instead, it offers three general arguments, none of which is sufficient.

First, the Petition argues Angeles purportedly would work with "a wide

[3] The Petition also notes, without additional argument or explanation, Pet., 80, n.14, that Wolf-003 and Angeles share one inventor and are both assigned to Aerin. The Petition, however, does not explain how or why this matters. In fact, the references also each have non-overlapping inventors (Scott Wolf on Wolf-003 and Michael Angeles and Fred Dinger on Angeles), and Wolf-003's underlying application was filed four years prior to Angeles's. *See* Ex.1005 (filed March 31, 2015); Ex.1007 (filed October 30, 2019).

variety of devices" including Aerin devices. Pet., 80. As discussed above, the Petition does not show that Angeles supports so broad a proposition. But regardless, "[s]uch short-cut logic" that any device would purportedly work with another reference would improperly "lead to the conclusion that any and all combinations of elements known in this broad field would automatically be obvious, without the need for any further analysis." *See Securus Techs., Inc.*, 701 Fed. App'x at 977. That is not the law. Instead, the Petition must provide articulated reasoning with some rational underpinning to support alleged obviousness. *See KSR Int'l Co. v. Teleflex Inc.*, 550 U.S. 398, 418 (2007). There is no articulated reasoning in the Petition as to why or how Wolf-003, in particular, would have been expected to work with Angeles's console.

Second, the Petition argues generalized alleged benefits of Angeles's console make it "desirable." Pet., 81-82. Simply alleging benefits of one prior art device, without examining how or why those benefits would apply to the other, however, is not enough to show a motivation to ***combine*** with a reasonable expectation the combination would be successful. *See Halliburton Energy Services, Inc., v. Schlumberger Technology Corporation*, IPR2017-02072, Paper 11, 20-21 (P.T.A.B. Apr. 12, 2018) (finding that the petitioner arguing several benefits that arise from a method disclosed in one prior art device is insufficient to establish a motivation to

combine because "the Petition does not explain adequately how or why these alleged benefits would have caused one of ordinary skill in the art to modify [the other prior art device]"). The Petition again does not articulate a theory as to why or how the alleged benefits of Angeles would be expected to apply to Wolf-003, in particular.

Last, the Petition argues that "implementing Angeles' console teachings with Wolf-003 would have been routine to a POSITA, merely requiring conventional hardware and software…." Pet., 82. The only support for this argument is the testimony of Dr. van der Weide, whose declaration repeats that conclusion ***nearly verbatim*** and without any further analysis. *See* Ex.1003, ¶329.

In sum, the Petition provides ***no reasoned analysis*** as to why or how the Wolf-003 device, specifically, would have been expected to successfully operate with Angeles' console. Its resort to overstated generalities about Angeles' disclosure, one-sided benefits of Angeles without tying them to Wolf-003, and an expert's say-so are insufficient to provide the requisite reasoned analysis. Ground III should therefore not be instituted.

VI. CONCLUSION

Based on the deficiencies identified above, Petitioner has not shown that it has a reasonable likelihood of prevailing on any of its proposed grounds. The Board should decline to institute an IPR proceeding based on the Petition.

Respectfully submitted,

By: */David L. Cavanaugh/*
David L. Cavanaugh
Registration No. 36,476
Counsel for Patent Owner

CERTIFICATE OF COMPLIANCE

Pursuant to 37 C.F.R. § 42.24(d), I hereby certify that **PATENT OWNER'S PRELIMINARY RESPONSE** contains 6903 words, excluding those portions identified in 37 C.F.R. § 42.24(a), as measured by the word-processing system used to prepare this paper.

Dated: October 8, 2025

By: /Gilbert T. Smolenski/
Gilbert T. Smolenski
Registration No. 78,549

CERTIFICATE OF SERVICE

I hereby certify that, on October 8, 2025, I caused a true and correct copy of the following materials:

- Patent Owner's Preliminary Response Pursuant to 37 C.F.R. § 42.107
- Certificate of Word Count Under 37 C.F.R. § 42.24(d)

to be served on Petitioner via electronic mail to:

Heath J. Briggs, BriggsH@gtlaw.com

Benjamin P. Gilford, GilfordB@gtlaw.com

Trenton Ward, Trenton.Ward@gtlaw.com

Elana Araj, Elana.Araj@gtlaw.com

Declan Stone-Murphy, Declan.StoneMurphy@gtlaw.com

Emma Cohen, Emma.Cohen@gtlaw.com

AerinMed-IPRs@gtlaw.com

/Gilbert T Smolenski/
Gilbert T. Smolenski
Registration No. 78,549