UNITED STATES PATENT AND TRADEMARK OFFICE

BEFORE THE PATENT TRIAL AND APPEAL BOARD

GLOBALFOUNDRIES U.S. INC. AND GLOBALFOUNDRIES INC.,

Petitioners,

v.

OAK IP, LLC.

Patent Owner.

PTAB Case No. IPR2025-01129

Patent No. 10,937,880

Title: METHOD FOR DEPINNING THE FERMI LEVEL OF A SEMICONDUCTOR AT AN ELECTRICAL JUNCTION AND DEVICES INCORPORATING SUCH JUNCTIONS

Issue Date: March 2, 2021

DECLARATION OF DR. E. FRED SCHUBERT IN SUPPORT OF PETITION FOR *INTER PARTES* REVIEW OF U.S. PATENT NO. 10,937,880

TABLE OF CONTENTS

I. INTRODUCTION 1

II. BASES FOR OPINION 1

III. MATERIALS CITED 2

IV. EDUCATION AND EXPERIENCE 3

A. Overview 3

B. Specific Experience with Metal-Semiconductor Junctions 5

C. Curriculum Vitae 8

V. LEGAL STANDARDS 8

A. Anticipation 8

B. Obviousness 9

C. Priority 11

1. Written Description Requirement 11

2. Enablement Requirement 12

D. Claim Construction 13

E. Incorporation by Reference 13

VI. OVERVIEW OF THE ’880 PATENT 14

A. Technical Background 14

1. Metal-Semiconductor Junctions 14

2. Fermi-Level Pinning in Metal-Semiconductor Junctions 18

3. Techniques for Depinning a Fermi Level 21

B. Prosecution History 26

C. Litigation History 27

1. District Court 27

2. IPR Petitions 28

VII. CLAIM CONSTRUCTION 28

VIII. PRIORITY DATE OF THE CHALLENGED CLAIMS 29

IX. LEVEL OF ORDINARY SKILL IN THE ART 30

X. SUMMARY OF OPINIONS 32

XI. OPINIONS 34

A. The parent applications of the ’880 Patent do not adequately describe an interface layer that comprises an “oxide of titanium” 34

1. The specification of ’880 Patent and its parent applications describe only a TiO_2 spacer layer 34

2. Genus of “oxide of titanium” includes numerous species that include oxygen and titanium atoms 39

3. Patent Owner agrees that the “oxide of titanium” genus includes numerous species that include oxygen and titanium atoms 44

4. Different species in the “oxide of titanium” genus can have different electrical and structural properties 45

5. A POSITA would not know whether some species in the genus of “oxide of titanium” would be suitable as an interface layer because their properties were not well understood. 74

B. Ancestor applications of the ’880 Patent fail to enable a specific contact resistivity less than 10 Ω-μm^2 or less than 1 Ω-μm^2 76

C. Overview of Prior Art 86

1. Grupp ’483 86

2. Jammy 89

D. Grupp ’483 anticipates Claims 1-22 94

E. Grupp ’483 anticipates Claims 26-28 96

F. Jammy renders obvious Claims 23-25 96

1. Claim 23 96

2. Claims 24 and 25 105

G. Alleged Secondary Considerations 105

I. INTRODUCTION

I, E. Fred Schubert, Ph.D., a resident of Troy, NY over 18 years of age, hereby declare as follows:

1. I have personal knowledge of all of the matters about which I testify in this declaration.

2. Covington & Burling LLP retained me on behalf of Petitioners GlobalFoundries U.S., Inc. and GlobalFoundries Inc. ("Petitioners" or "GF") to provide my technical opinions and testimony about Claims 1-28 of U.S. Patent 10,937,880 (Ex. 1001, "the '880 Patent"), assigned to Oak IP, LLC ("Patent Owner" or "Oak IP"). I refer to those claims as the "Challenged Claims." The full text of the Challenged Claims appears in **Appendix A** to my declaration.

3. I am being compensated for my work in this proceeding at my usual consulting rate of $600/hour and receiving reimbursement for expenses incurred in the course of my work. My compensation is not contingent in any way on either the opinions I have reached or the outcome of this case.

II. BASES FOR OPINION

4. I have reviewed and considered the documents listed below in Section III in light of my specialized knowledge provided by my education, training, research, and experience, as summarized in Section IV and described in detail in my CV, which is attached to this declaration as **Appendix C.** My analysis of those documents,

combined with the specialized knowledge and practical hands-on experience that I have obtained over the course of my education and career, form the bases for my opinions in this declaration.

III. MATERIALS CITED

5. I have reviewed, analyzed, and relied upon the documents listed in **Appendix B** in reaching my opinions in this matter. I have also reviewed and analyzed the exhibits cited in this declaration.

6. At the direction of the attorneys for the Petitioners, I have reviewed certain portions of the Petition in arriving at my opinions. I reference those portions of the Petition in the declaration as relevant.

7. Where my declaration cites an exhibit by a page number, I have used the page numbers that Petitioners have added to that exhibit instead of citing to the original pagination. Where my declaration cites a patent, I have cited to the column and line of the patent. Where my declaration cites an exhibit that has paragraph numbers, I have cited to the paragraph number. Finally, where there is emphasis in a quotation, I have added that emphasis unless I indicate otherwise.

IV. EDUCATION AND EXPERIENCE

A. Overview

8. I am currently an active tenured full Professor in the Department for Electrical, Computer, and Systems Engineering at the Rensselaer Polytechnic Institute (RPI) located in Troy, New York.

9. I received a Master's Degree in Electrical Engineering from the University of Stuttgart, Germany, in 1981. I received a Ph.D. degree in Electrical Engineering from the University of Stuttgart, while working at the Max Planck Institute for Solid-State Research, in Stuttgart, from 1981 to 1985.

10. Subsequent to my education, starting in 1985, I worked in industry at AT&T Bell Laboratories in Holmdel and Murray Hill, New Jersey, for ten years.

11. In 1995, I joined academia. My first position was at Boston University (Boston, MA), where I worked as a full professor for seven years.

12. In 2002, I joined RPI as a distinguished professor, the Wellfleet Senior Constellation Professor and Head of the Future Chips Constellation with appointments in the Department for Electrical, Computer, and Systems Engineering and the Department for Physics, Applied Physics and Astronomy. I am the founding Director of the Smart Lighting Engineering Research Center that was funded by the U.S. National Science Foundation at a volume of $40 million for over 10 years.

13. I am named as co-inventor in more than 35 U.S. patents and have co-authored more than 300 publications. I authored the books *"Doping in III-V Semiconductors"* (1993), *"Delta Doping of Semiconductors"* (1996), *"Physical Foundations of Solid-State Devices"* (2015) and the first, second and third editions of *"Light-Emitting Diodes"* (2003, 2006 and 2018); the latter book is known as a standard textbook in the field of LEDs, and the book has been translated into Russian, Japanese and Korean. My publications have been well recognized by the technical community as illustrated by the more than 45,000 citations that my publications have received.

14. I received several awards for my technical contributions. They include: Senior Member IEEE (1993); Literature Prize of Verein Deutscher Elektrotechniker for my book *"Doping in III-V Semiconductors"* (1994); Fellow SPIE (1999); Alexander von Humboldt Senior Research Award (1999); Fellow IEEE (1999); Fellow OSA (2000); Boston University Provost Innovation Award (2000); Discover Magazine Award for Technological Innovation (2000); R&D 100 Award for RCLED (2001); Fellow APS (2001); RPI Trustees Award for Faculty Achievement (2002 and 2008); honorary membership in Eta Kappa Nu (2004); 25 Most Innovative Micro- and Nano-Products of the Year Award of R&D Magazine (2007); and Scientific American 50 Award (2007).

15. My general expertise is in the field of electrical engineering and applied physics including semiconductor materials, processing, and devices. My specific

expertise is in the field of semiconductor devices, semiconductor integrated circuits, ohmic and Schottky contacts, and optoelectronic devices such as light-emitting diodes (LEDs). My work has included the design, growth, fabrication, and testing of semiconductor devices as well as the employment of these devices in a variety of applications. I have made pioneering contributions to the following technical fields that are relevant to the present matter: Delta-doping of semiconductors, monolayer doping of semiconductors, integrated circuit fabrication processes, Schottky contacts, ohmic contacts, polarization-enhanced ohmic contacts, delta-doped ohmic contacts, non-alloyed ohmic contacts, fabrication technologies of ohmic contacts, and the theory of ohmic and Schottky contacts.

B. Specific Experience with Metal-Semiconductor Junctions

16. The ’880 Patent generally relates to metal-semiconductor junctions that have an interface layer between the metal and the semiconductor. (Ex. 1001 [’880 Patent] at 1:31-35.) There are two main types of metal-semiconductor junctions: rectifying contacts, also known as Schottky contacts; and low-resistance contacts, also known as ohmic contacts. (*Id.* at 1:42-48; Ex. 1023 [Rhoderick] at 1.) The claims and the specification of the ’880 Patent focus on low resistance contacts. (Ex. 1001 [’880 Patent] at 4:27-30, 5:21-30.)

17. I have extensive experience related to ohmic contacts for semiconductor devices, both with silicon-based semiconductors and Group III-V semiconductors.

This includes the fabrication of ohmic contacts, the assessment of specific contact resistance, the design of ohmic contacts, and the theory of ohmic contacts.

18. I have written several publications on the topic of ohmic contacts to semiconductors. My publications on ohmic contacts to semiconductors include:

- E. F. Schubert, J. E. Cunningham, W. T. Tsang, and T. H. Chiu, "Delta-doped ohmic contacts to n-GaAs," Applied Physics Letters 49, 292 (1986) and Applied Physics Letters 49, 984 (1986).
- Y.-L. Li, E. F. Schubert, J. W. Graff, A. Osinsky, and W. F. Schaff, "Low-resistance ohmic contacts to p-type GaN," Applied Physics Letters 76, 2728 (May 2000).
- T. Gessmann, Y.-L. Li, E. L. Waldron, J. W. Graff, and E. F. Schubert, "Ohmic contacts to p-type GaN mediated by polarization fields in thin InGaN capping layers," Applied Physics Letters 80, 986 (Feb. 2002).
- T. Gessmann, Y.-L. Li, E. L. Waldron, and E. F. Schubert, "Novel type of ohmic contacts to p-doped GaN using polarization fields in thin InGaN capping layers," Journal of Electronic Materials 31, 416 (May 2002).
- T. Gessmann, J. W. Graff, Y.-L. Li, E. L. Waldron, and E. F. Schubert, "Ohmic contact technology in III-V nitrides using polarization effects in cap layers," Proceedings of the Lester Eastman conference on high-speed devices (Sept. 2002).
- T. Gessmann, J. W. Graff, Y.-L. Li, E. L. Waldron, and E. F. Schubert, "Ohmic contacts to III-V nitrides using polarization effects of cap layers," Journal of Applied Physics 92, 3740 (October 2002).

- Seung Cheol Han, Jae-Kwan Kim, Jun Young Kim, Dong Min Lee, Jae-Sik Yoon, Jong-Kyu Kim, E. F. Schubert, and Ji-Myon Lee, "Ohmic contacts to N-face p-type GaN using Ni/Au for the fabrication of polarization inverted light-emitting diodes," Journal of Nanoscience and Nanotechnology 13, 5715 (Aug. 2013).
- Dissertation by E. F. Schubert, "Modern Schottky gate field-effect transistors based on III-V semiconductors" (University of Stuttgart, Germany, 1986).
- "Physical Foundations of Solid-State Devices" (Book, Google Books, Mountain View CA, 2015).
- H.-J. Gossmann and E. F. Schubert, "Delta doping in silicon" CRC Critical Reviews in Solid State and Materials Sciences 18, 1 (1993).

19. I am an inventor on U.S. patents that are specifically directed to ohmic contacts for semiconductors. My patents related to ohmic contacts to semiconductors include:

- J. E. Cunningham, E. F. Schubert, and W. T. Tsang, "Delta doped ohmic metal to semiconductor contacts" U.S. Patent No. 4,772,934, issued on September 20, 1988.
- J. E. Cunningham, E. F. Schubert, and W. T. Tsang, "Field-effect transistor having a delta-doped ohmic contact" U.S. Patent No. 4,780,748, issued on October 25, 1988.

20. Further, at RPI, I regularly teach on the subject of Schottky contacts and ohmic contacts for group-IV and group-III-V semiconductors, including the theory of

ohmic contacts. In my research laboratories, we routinely measure the properties of ohmic contacts, including the contact resistance, the specific contact resistance and the transfer length. We also assess structural aspects of semiconductor devices, including ohmic contacts, by assessment techniques such as SIMS (secondary ion mass spectrometry), AES (auger electron spectroscopy), SEM (scanning electron microscopy), EDXS (energy dispersive x-ray spectroscopy), and ellipsometry.

C. Curriculum Vitae

21. In addition to the summary I have provided here, I describe my education and experience in greater detail in my CV, which is attached to this declaration as **Appendix C**.

V. LEGAL STANDARDS

22. The attorneys for Petitioners have explained to me the legal standards that apply in this case. My understanding of those standards is described below. I am not an attorney, and although I hold several patents, I do not have formal training in the law regarding patents. I have used my understanding of the following legal principles set forth in this section in reaching my opinions.

A. Anticipation

23. I understand that to anticipate a claim of a patent, a prior art reference must disclose, either expressly or inherently, all limitations of a claim as those limitations are arranged in the claim. I understand that if a prior art reference discloses

a species of a genus (e.g. one specific element of a category of elements) then a patent's claim limitation claiming the genus is satisfied by the prior art reference.

24. I understand that for a reference to anticipate a claim, the reference must disclose the relevant technology in a manner such that a person of ordinary skill in the relevant art would be able to carry out or utilize the technology that the reference describes without having to undertake undue experimentation. I also understand that prior art references are presumed to be enabling.

25. I understand that a limitation is disclosed inherently in a reference only if it is necessarily present in the process or product described in the prior art reference. I understand that probabilities or possibilities are insufficient to show that a prior art reference inherently discloses something beyond what it discloses explicitly.

B. Obviousness

26. I understand that under 35 U.S.C. § 103, "[a] patent may not be obtained though the invention is not identically disclosed or described as set forth in section 102, if the differences between the subject matter sought to be patented and the prior art are such that the subject matter as a whole would have been obvious at the time the invention was made to a person having ordinary skill in the art to which said subject matter pertains."

27. I understand that I must consider whether the claimed subject matter as a whole would have been obvious to a person of ordinary skill in the art at the time of the invention in light of the following:

- The scope and content of the prior art;
- Any differences between the prior art and the claim;
- The level of ordinary skill in the pertinent art; and
- Any evidence of secondary indicia of non-obviousness (if available).

28. I understand that in the case where the claimed ranges "overlap or lie inside ranges disclosed by the prior art" a prima facie case of obviousness exists. I further understand that such an overlap creates a presumption of obviousness, and that the burden of production falls upon the patentee to come forward with pertinent evidence that the overlapping range would not have been obvious in light of the prior art.

29. It is my understanding that there must be a nexus between any secondary indicia of non-obviousness and the claimed subject matter. Further, I understand that evidence of secondary indicia of non-obviousness must be commensurate with the scope of the claimed subject matter.

C. Priority

30. I understand that for a claim to receive a priority date of an earlier parent application, the earlier application must both (1) provide adequate written description of the claimed subject matter; and (2) enable the claimed subject matter.

31. I understand that for a claim to obtain the benefit of the filing date of an earlier application via a chain of parent applications, each application in the chain leading back to the earlier application must both (1) provide adequate written description of the claimed subject matter; and (2) enable the claimed subject matter. I discuss my understanding of those two requirements below.

1. Written Description Requirement

32. I understand that the test for sufficiency of written description is whether the disclosure of the application relied upon reasonably conveys to those skilled in the art that the inventor had possession of the claimed subject matter as of the filing date. I further understand that a disclosure in a parent application that merely renders the later-claimed invention obvious does not satisfy the written description requirement; instead, the disclosure must describe the claimed invention with all its limitations.

33. I understand that the abstract, specification, figures, and originally-filed claims of a patent application are considered part of the application's written description. I understand that other patents or patent applications incorporated by

reference in the patent application at issue must be considered in assessing whether that patent application provides adequate written description.

34. I understand that a sufficient description of a genus requires the disclosure of either a representative number of species falling within the scope of the genus or structural features common to the members of the genus so that a person of ordinary skill in the art can visualize or recognize the members of the genus. I further understand that describing a single species is not sufficient to support claims to a genus when the evidence indicates ordinary artisans could not predict the operability in the invention for the remainder of the species other than the one disclosed.

2. Enablement Requirement

35. I understand that to enable a patent claim, the patent's disclosure must teach ordinarily skilled artisans how to make and use the full scope of the claim without undue experimentation. I understand that the following factors are typically considered in assessing whether a patent's disclosure enables a person of ordinary skill in the art to make and use the full scope of the claimed invention without undue experimentation: (1) the quantity of experimentation necessary, (2) the amount of direction or guidance presented, (3) the presence or absence of working examples, (4) the nature of the invention, (5) the state of the prior art, (6) the relative skill of those in the art, (7) the predictability or unpredictability of the art, and (8) the breadth of the claim. But, I understand that not all of those factors need to be reviewed to determine

whether a disclosure is enabling. Instead, those factors are illustrative, but not mandatory. In some instances, the breadth of the claim alone may indicate that the claim is not enabled.

D. Claim Construction

36. I understand that in this proceeding, the claims are construed according to their ordinary and customary meaning in light of the specification and file history of the patent in which those claims appear. I understand that this is the same claim construction approach used in district court litigation. I understand that unless the specification mentions otherwise, the same claim term in the same patent or related patents that share the same specification should be given the same meaning.

E. Incorporation by Reference

37. I understand that instead of repeating some information contained in another document, an application or a patent may choose to incorporate the content of another document or part thereof by reference to the document in the text of the specification. The information incorporated is as much a part of the application or the patent as filed as if the text was repeated in the application or the patent, and should be treated as part of the text of the application as filed or the patent as issued.

VI. OVERVIEW OF THE '880 PATENT

A. Technical Background

1. Metal-Semiconductor Junctions

38. The '880 Patent generally relates to metal-semiconductor junctions, which are basic electronic components. (Ex. 1001 ['880 Patent] at 1:31-35.) "In these junctions, a metal (such as aluminum) is brought in contact with a semiconductor (such as silicon)." (*Id.* at 1:40-42.) Thus, metal-semiconductor junctions are also commonly known as metal-semiconductor contacts. (*E.g.*, Ex. 1029 [Schroen] at 1:7-15; Ex. 1023 [Rhoderick] at 1.)

39. The two principal types of metal-semiconductor junctions are (1) rectifying contacts, which are also called Schottky contacts or Schottky diodes; and (2) low-resistance contacts, also known as ohmic contacts. (Ex. 1023 [Rhoderick] at 1, 11.) Rectifying contacts "tend to conduct current in one direction more favorably than in the other direction." (Ex. 1001 ['880 Patent] at 1:44-45.) Ohmic contacts, on the other hand, display low resistance regardless of the direction of current flow. (*Id.* at 1:45-48; Ex. 1023 [Rhoderick] at 11.)

40. "A Schottky barrier . . . is characterized by an impedance due to the barrier height and width, which must be minimized in the formation of ohmic contacts." (Ex. 1029 [Schroen] at 1:33-37; Ex. 1001 ['880 Patent] at 3:6-9.) The energy barrier impedes the flow of charge carriers at the interface between the metal and the

semiconductor. (Ex. 1001 ['880 Patent] at 1:52-54; Ex. 1023 [Rhoderick] at 1.) The width of the barrier is the width of the depletion region created when electrons deplete from the semiconductor and transition to the metal. (Ex. 1029 [Rhoderick] at 1; Ex. 1024 [Chang] at 545-546.)

41. The barrier's width depends on the doping concentration of the semiconductor, among other factors. (Ex. 1024 [Chang] at 545.) Increasing the doping concentration generally reduces the barrier's width, which facilitates the flow of charge carriers (electrons or holes) across the barrier via quantum tunneling. (*Id.*) "Thus, even a high barrier contact can become ohmic if the barrier is thin enough such that tunneling dominates the carrier transport process . . . ." (*Id.*) Consistent with Chang's disclosure that increasing doping can improve the flow of charge carriers across a barrier, the '880 Patent admits that a known approach to reducing the specific contact resistance of a metal-semiconductor junction was to increase the doping concentration of the semiconductor. (Ex. 1001 ['880 Patent] at 18:23-26.)

42. The height of the barrier depends on, among other factors, the type of semiconductor used, the type of metal used, and the properties of the interface between the metal and the semiconductor. (Ex. 1001 ['880 Patent] at 2:10-3:9; Ex. 1025 [Goodnick] at 949; Ex. 1023 [Rhoderick] at 2-3.)

43. One important property of the interface that affects the barrier height is the presence of electron states at the interface. (Ex. 1001 ['880 Patent] at 3:5-9.)

Electron states include electron orbitals and chemical bonds (including dangling bonds), which can be occupied by an electron (filled state) or unoccupied (empty state).

44. The ’880 Patent identifies two main types of states that affect barrier height: (1) states at the surface of the semiconductor, which are also called Bardeen states; and (2) metal-induced gap states, which are abbreviated as MIGS. (Ex. 1001 [’880 Patent] at 2:10-3:9.)

45. The first type of electron states, Bardeen states, are states that arise from dangling bonds at the surface of the semiconductor. (Ex. 1001 [’880 Patent] at 2:10-22.) Fig. 1 of the ’880 Patent depicts an example of dangling bonds (reference number 120) at a silicon surface:

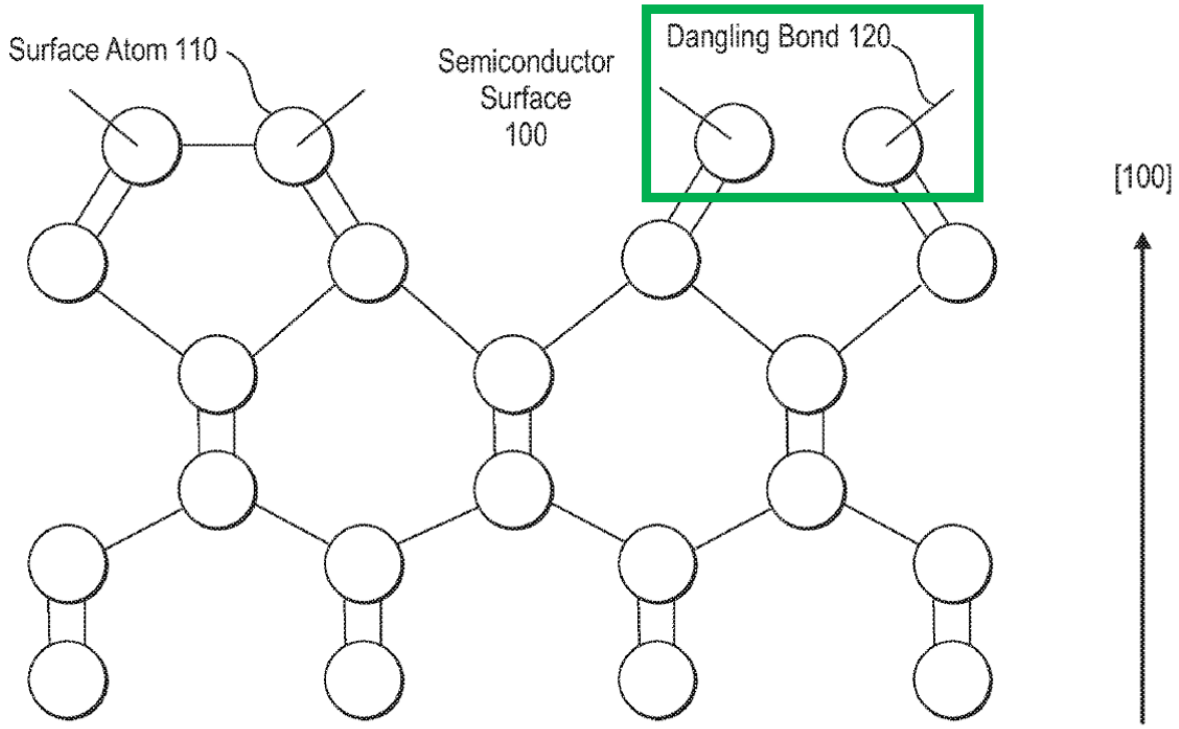

Fig. 1

(*Id.* at Fig. 1 (annotation added).)

46. As can be seen in Fig. 1, some, but not all, of the silicon atoms at the surface have a bonding partner. (Ex. 1001 ['880 Patent] at 2:10-24.) The unsatisfied chemical bonds of those silicon atoms without a bonding partner are called dangling bonds because they freely dangle at the surface of the silicon. (Ex. 1023 [Rhoderick] at 2.) A dangling bond "can either give up its electron, acting as a donor, or accept another, acting as an acceptor." (*Id.*) Either way, the surface states give rise to a net charge that modifies the barrier height. (*Id.* at 2-3.)

47. The second type of electron states, metal-induced gap states (MIGS), originate in the metal, but induce electron states within the semiconductor. (Ex. 1023 [Rhoderick] at 3.) More specifically, metal-induced gap states "are energy states in the bandgap of the semiconductor that become populated due to the proximity of the metal. That is, the wave functions of the electrons in the metal do not terminate abruptly at the surface of the metal, but rather decay in proportion to the distance from that surface (*i.e.*, extending inside the semiconductor)." (Ex. 1001 ['880 Patent] at 2:47-54.)

2. Fermi-Level Pinning in Metal-Semiconductor Junctions

48. Early attempts to model barrier heights at metal-semiconductor junctions did not account for Bardeen states (from dangling bonds) or metal-induced gap states (from the proximity of the metal). (Ex. 1001 ['880 Patent] at 1:55-64.) In 1938, Schottky theorized that the barrier height of a metal-semiconductor junction was determined solely by the difference between the work function of the metal and the electron affinity of the semiconductor:

> In this model, the height of the barrier (as measured by the potential necessary for an electron to pass from the metal to the semiconductor) was postulated as the difference between the work function of the metal (the work function is the energy required to free an electron at the Fermi level of the metal, the Fermi level being the highest occupied energy state of the metal at T = 0) and the electron affinity of the semiconductor (the electron affinity is the difference between the energy of a free electron and the conduction band edge of the semiconductor).

(Ex. 1001 ['880 Patent] at 1:55-64.)

49. Subsequent experimental observations of the barrier heights for metal-semiconductor junctions did not agree with Schottky's theory. (Ex. 1001 ['880 Patent] at 2:3-9; Ex. 1023 [Rhoderick] at 2.) The '880 Patent summarizes those observations:

> If the theory is correct, one should be able to observe direct variations in barrier heights for metals of different work functions when put in contact with a common semiconductor. What is observed, however, is not direct scaling, but instead only a much weaker variation of barrier height with work function than implied by the model.

(Ex. 1001 ['880 Patent] at 2:4-9.)

50. Bardeen later attributed that "much weaker variation of barrier height with work function than implied by the model" to surface states arising from dangling bonds. (Ex. 1001 ['880 Patent] at 2:7-9; Ex. 1023 [Rhoderick] at 2.)

51. Later, Heine and Tersoff developed and refined a model that incorporated metal-induced gap states to explain why the barrier height of metal-semiconductor junctions did not always vary with the work function of the metal. (Ex. 1001 ['880 Patent] at 2:32-67, 7:55-59.)

52. Bardeen states and metal-induced gap states were believed to be (and still are believed to be) the main causes of a phenomenon referred to as Fermi-level pinning, in which the Fermi level is "pinned" within the bandgap of the semiconductor, typically near the middle of the bandgap. (Ex. 1001 ['880 Patent] at 2:10-67, 5:35-38,

7:55-59.) Fig. 7a of the '880 Patent shows an example of Fermi-level pinning for a metal-semiconductor junction with no interface layer:

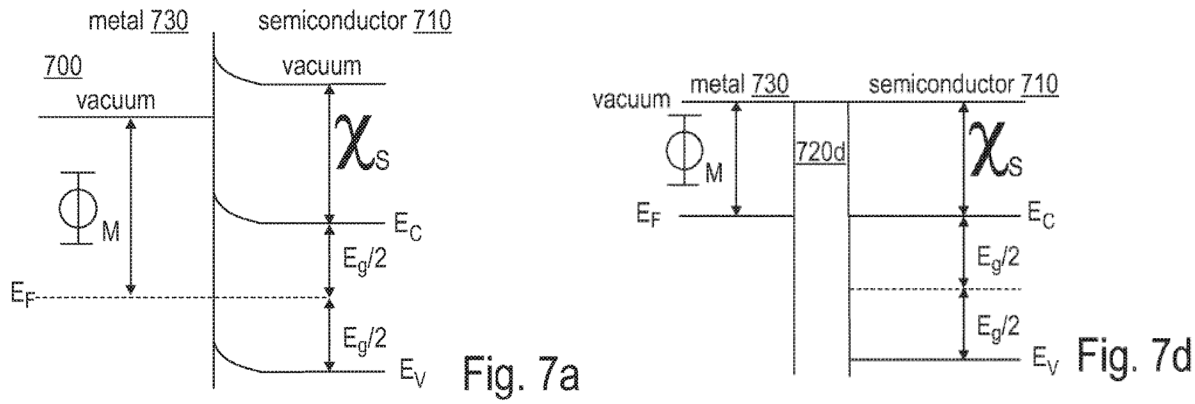

(*Id.* at Fig. 7a and 7d, 16:65-17:1, 17:13-25.)

53. Fig. 7a (above on left) depicts that the pinned Fermi level E_F is not aligned with the conduction band edge E_C of the semiconductor at the interface. However, as Fig. 7d (above on right) depicts, "when the interface layer 720d is sufficient to both eliminate or reduce the effect of MIGS and to passivate the semiconductor surface, we see the Fermi level of the metal aligning with the conduction band of the semiconductor" and "vacuum level is now continuous as there is no charged dipole at the interface." (*Id.* at 17:13-25.)

54. For a junction between a metal and an n-type semiconductor, where there is a difference between the Fermi level and the conduction band edge of the semiconductor (labeled E_c in the figure above), a barrier forms "that blocks further transfer of electrons into or out of the semiconductor." (Ex. 1001 ['880 Patent] at 7:38-

40.) Referring to the example barrier between a metal and n-type silicon shown in Fig. 4 (excerpted below), if the Fermi level is pinned at E_F, the height Φ_b of that barrier is the difference between the Fermi level E_F and the conduction band edge of the semiconductor E_c at the interface:

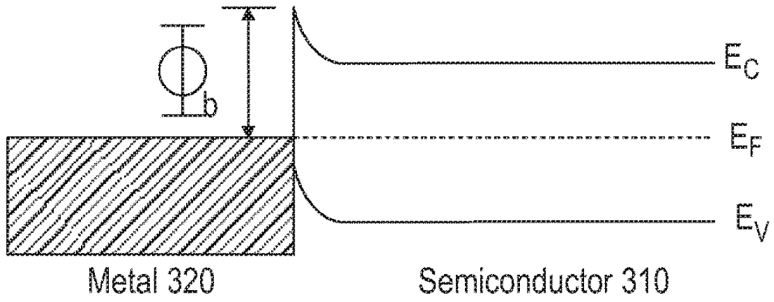

Fig. 4
(Prior Art)

Id. at Fig. 4.

55. As the '880 Patent notes, "[t]he importance of the barrier height at a metal-semiconductor interface is that it determines the electrical properties of the junction. Thus, if one were able to control or adjust the barrier height of a metal-semiconductor junction, one could produce electrical devices of desired characteristics." (Ex. 1001 ['880 Patent] at 3:10-14.) The '880 Patent also describes that depinning the Fermi level is one way to control or adjust barrier height. (*Id.* at 16:36-57.)

3. Techniques for Depinning a Fermi Level

56. Techniques for depinning the Fermi level of a metal at a metal-semiconductor junction were well-known before the earliest possible priority date of the '880 Patent of August 12, 2002. As discussed in the background and elsewhere in

the ’880 Patent, it was believed that the two principal causes of Fermi-level pinning are (1) Bardeen states arising from dangling bonds at the surface of the semiconductor; and (2) metal-induced gap states arising from the proximity of the metal to the semiconductor. (Ex. 1001 [’880 Patent] at 2:10-67, 5:35-38, 7:55-59.)

57. It had also been known since at least the 1980s that an interface layer disposed between the metal and the semiconductor could satisfy dangling bonds to reduce Bardeen states and displace the metal from the semiconductor to reduce the effects of metal-induced gap states.

58. The Goodnick reference from April 1981 provides an example of using an interface layer to depin a Fermi level at a metal-semiconductor junction. “The presence of a thin interfacial oxide at metal-silicon interfaces may have a profound effect on the formation of Schottky barriers.” (Ex. 1025 [Goodnick] at 949.) “[A]n oxide layer that is sufficiently thin may sustain considerable current via tunneling.” (*Id.*) “A thin interfacial oxide also may significantly reduce the density of interface states by satisfying silicon dangling bonds. As a result, the Fermi level at the surface may become unpinned and the barrier height is more directly determined by the metal work function.” (*Id.*) Thus, Goodnick discloses using a thin interfacial oxide to satisfy silicon dangling bonds, which reduces the Bardeen states that contribute to Fermi-level pinning.

59. Rhoderick, an article from 1982, provides an overview of the "present knowledge of metal-semiconductor contacts." (Ex. 1023 [Rhoderick] at Abstract.) Rhoderick analyzed both "real" contacts (i.e., contacts between a metal and semiconductor with a thin layer of interfacial oxide between the two) and "intimate" contacts (i.e., metal-semiconductor contacts devoid of an interfacial layer). (*Id.* at 3.) Rhoderick reported: "'Real' contacts . . . are rather better understood than intimate contacts because the oxide tends to reduce the importance of interdiffusion, and also because, to a certain extent, it 'decouples' the electron states in the semiconductor from the influence of the metal, and so they can be analyzed more simply." (*Id.*) Thus, Rhoderick described that an interfacial oxide in a metal-semiconductor junction decouples the electron states in a semiconductor from the effects of a metal. An ordinarily skilled artisan would have understood that Rhoderick's description of decoupling electron states in the semiconductor from the influence of the metal referred to reducing the effects of metal-induced gap states in the semiconductor.

60. Sobolewski, an article from 1989, discloses that "[a] thin (< 30 Å) insulating layer present at a metal-semiconductor interface" changes the barrier height of a metal-semiconductor junction: "the barrier height of such a metal-insulator semiconductor (MIS) Schottky barrier will in general differ from that obtained in the absence of the insulating layer." (Ex. 1026 [Sobolewski] at 971.) Sobolewski also discloses that the thin insulating layer produces that change in barrier height by

passivating the semiconductor and reducing the penetration of metal wave functions into the semiconductor: "[t]his can be attributed either to a passivation of semiconductor interface states by the insulating layer, to a reduction of the penetration of metal wave functions into the semiconductor, to the chemistry of the metal-insulator interface, or to some combination of these effects." (*Id.*)

61. It was also well-known before 2002 that an interfacial oxide in a metal-semiconductor junction could reduce the Schottky barrier height of the junction.

62. Risko, a U.S. patent issued in 1978, discloses that an oxide layer disposed between a metal and a silicon substrate reduces the Schottky barrier height. "The deposition of the Schottky metal upon an oxide adjacent a silicon substrate has heretofore produced inferior Schottky barriers." (Ex. 1027 [Risko] at 1:43-45.) "Hence, a production of a Schottky barrier on an oxide coated substrate is known to produce a Schottky barrier with a substantially lowered barrier height." (*Id.* at 1:47-50.)

63. Taubenblatt 1984 describes that an interfacial oxide reduces the pinning ability of interface states in the silicon:

> The effect of interfacial oxides on barrier height has been explained by Turner and Rhoderick as being due to a reduction in Si interface states due to oxygen bonding to Si. ***This results in a reduction, in turn, of the pinning ability of the states,*** so that the barrier behaves more like

> an ideal Schottky barrier, with low work function metals having high (low) barriers to p-type (n-type) silicon.

(Ex. 1028 [Taubenblatt 1984] at 897.)

64. Similarly, it was well-known before 2002 that interposing an interface layer between a metal and a semiconductor at a metal-semiconductor junction could reduce specific contact resistance.

65. The Schroen patent, which issued in 1976, is one example. Its abstract states that the specific contact resistance that could be obtained by using a thin insulating interfacial layer between a metal and a semiconductor was "far smaller than the resistance one would observe in a structure consisting only of the semiconductor and metallization layer because the resistance of the structure is dominated by the resistance of the Schottky barrier formed at the metal-semiconductor interface." (Ex. 1029 [Schroen] at Abstract.)

66. Kim, a patent issued in 1989, is another example. Kim describes an interface layer formed by titanium reducing silicon dioxide:

> It is believed that during the sintering step titanium in the conductor 27 at the interface between the conductor 27 and the silicon conductive members 15, 17 and 16 reacts with native silicon dioxide present on the exposed portions of these conductors to form silicon and titanium dioxide, a semiconductor, thereby reducing the interface resistance.

(Ex. 1030 [Kim] at 4:63-5:1.)

67. Kim further describes achieving a specific contact resistance as low as 8 Ω-μm^2. (Ex. 1030 [Kim] at 5:27-30.)

68. Iwaguro is a more recent example. Iwaguro describes a 0.3 nm to 2.25 nm silicon sub-oxide layer between a metal and a semiconductor. (Ex. 1032 [Iwaguro] at [0005]-[0006], [0012]-[0014].) Iwaguro particularly discloses that "[b]y bringing a metal film into contact with this sub silicon oxide film, an ohmic junction exhibiting favorable low contact resistance can be obtained." (*Id.* at [0006].) And Iwaguro describes that the interface layer it used had 14.3% lower specific contact resistance than an otherwise identical contact that did not employ an interface layer. (*Id.* at [0013].) Furthermore, Figure 3 of Iwaguro compares a contact with a 1.5 nm thick interfacial oxide film (curve B in Iwaguro's Figure 3) to a contact without an interfacial oxide film (intimate contact, curve C in Iwaguro's Figure 3). The interfacial-oxide contact has an ohmic current-voltage characteristic, whereas the intimate contact has a Schottky-type rectifying current-voltage characteristic. The difference in the magnitude of current flowing through the two contacts (near zero voltage), and thus the difference in specific contact resistance, is at least a factor of a hundred, as indicated by the differences in the slopes of curve B and curve C near zero voltage.

B. Prosecution History

69. I have reviewed the prosecution history of the '880 Patent, as well as the prosecution histories of the patent and patent applications in its priority chain. (Exs.

1002-1020, 1124-1127, 1129-1130.) In addition, I have reviewed **Section VII.B** of the Petition that provides a summary of the file history and partial family tree of the family of the ’880 Patent, and I concur with that section. To the extent the file histories of the ’880 Patent or any of its parent applications affect my analysis, I have addressed those file histories below.

C. Litigation History

1. District Court

70. I understand that on February 4, 2025, Oak IP, LLC (“Oak IP”) filed a Complaint in the District Court for the District of Delaware against GlobalFoundries Inc. and GlobalFoundries U.S., Inc. (“GF”) asserting, among other patents, the ’880 Patent. (Ex. 1095 [Oak IP Complaint] ¶¶ 70-80) (“Oak IP/GF Litigation”). I refer to Oak IP as the Patent Owner or the current Patent Owner.

71. I understand that on October 23, 2019, Acorn Semi, LLC (“Acorn”) filed a complaint in the District Court for the Eastern District of Texas against several Samsung entities (“Samsung”) asserting, among other patents, U.S. Patent No. 10,090,395 (the “’395 Patent”). (Ex. 1038 [Acorn Complaint] ¶¶ 108-117) (“Acorn/Samsung Litigation”). Though the ’880 Patent was not asserted by Acorn in that litigation, the ’880 Patent shares the specification with the patents asserted in the Acorn/Samsung Litigation, including the ’395 Patent. I refer to Acorn as the prior Patent Owner or the Patent Owner during the Acorn/Samsung Litigation.

2. IPR Petitions

72. I understand that Samsung filed several petitions for *inter partes review* of the patents asserted by Acorn in the Acorn/Samsung Litigation. I served as an expert in several IPRs, provided declarations and was deposed. In particular, Samsung filed IPR2020-01207 (Ex. 1089 [Grupp '483 IPR]) and IPR2020-01282 (Ex. 1096 [Goodnick IPR]) for the '395 Patent and IPR2020-01206 (Ex. 1131 [Grupp '483]) and IPR2020-01279 (Ex. 1134 [Goodnick IPR]) for U.S. Patent No. 9,905,691 (the "'691 Patent").

VII. CLAIM CONSTRUCTION

73. For all claim terms, I have applied the ordinary and customary meaning of those terms as understood by one of ordinary skill in the art in light of the specification and prosecution history of the '880 Patent.

74. I understand that the district court in the Eastern District of Texas issued a *Markman* order on October 16, 2020 and has construed the following terms of the Challenged Claims in the Acorn/Samsung Litigation. (Ex. 1100 [Acorn/Samsung Markman Order]). Some of the key terms and their constructions that I have applied in my analysis are listed below:

Term	Claims	Construction
"interface layer"	1-30	Plain and ordinary meaning

"said interface layer comprising an oxide of titanium and an oxide of the semiconductor"	17-28	"said interface layer comprising a layer of an oxide of titanium and a distinct layer of an oxide of the semiconductor region"
"specific contact resistivity"	26-28	"specific contact resistance"
"passivating material"	1-28	"material capable of terminating dangling bonds at the surface of the semiconductor"

(Ex. 1100 [Acorn/Samsung Markman Order] at 14, 27-29; Ex.1133 [Grupp '483 IPR] at 8-9; Ex.1136 [Goodnick IPR] at 8.) The claims of the '880 Patent uses similar terms though not exactly the same terms as the claims that were construed by the district courts in the Eastern District of Texas. Given that all of these patents share the same specification, a POSITA would understand that the terms describe the same invention.

VIII. PRIORITY DATE OF THE CHALLENGED CLAIMS

75. I have reviewed **Sections X.A, X.B and X.C** of the Petition that lists the priority dates of the Challenged Claims, and I concur with that section. I summarize the priority of the Challenged Claims below:

Challenged Claims	Priority Date	Scope of Claims
1-22 and 28	Feb. 19, 2016	Require "oxide of titanium"

26, 27 and 28	May. 12, 2020	Require "specific contact resistivity"
23-25	Aug. 12, 2002	Does not require either "oxide of titanium" or "specific contact resistivity"

IX. LEVEL OF ORDINARY SKILL IN THE ART

76. I understand that written description and enablement are considered from the perspective of a person of ordinary skill in the art (or a POSITA).

77. My analysis and my opinions in this declaration for Claims 1-22 and 28 (i.e., claims that require an "oxide of titanium") are from the perspective of a person of ordinary skill in the art as of 2016.

78. My analysis and my opinions in this declaration pertaining to Claims 26 and 28 (i.e., claims that require "specific contact resistivity . . . of less than 10 $\Omega-\mu m^2$") and Claim 27 (i.e., claims that require "specific contact resistivity . . . of less than 1 $\Omega-\mu m^2$") are from the perspective of a person of ordinary skill in the art as of 2020.

79. My analysis and my opinions in this declaration pertaining to Claims 23-25 (i.e., claims that require neither a "metal oxide" nor an "oxide of titanium") are from the perspective of a person of ordinary skill in the art as of 2002.

80. I understand that several factors are considered in determining the level of ordinary skill in the art, including the educational level of active workers in the field, the types of problems encountered in the art, the nature of prior art solutions to those

problems, prior art patents and publications, the activities of others, the sophistication of the technology involved, and the rapidity of innovations in the field.

81. I have reviewed **Section IX** of the Petition that lists the skill of a person of ordinary skill in the field of the ’880 Patent, and concur with that level of skill. I offered the same opinion and the prior IPR petitions involving the ’395 Patent, and I understand that the Board concurred with the above mentioned qualifications of a person of ordinary skill. (Ex. 1091 [Grupp ’483 IPR] at 8-9.)

82. I understand that Patent Owner may contend that the priority date of the Challenged Claims is August 12, 2002. Although a person of ordinary skill in the art would have been aware of any additional developments in the field between August 2002 and May 2020, the level of ordinary skill in the art would have been essentially the same in August 2002, February 2016, or May 2020. Thus, the perspective of a person of ordinary skill in the art would have been essentially the same in August 2002, February 2016, or May 2020, and my opinions providing the perspective of a person of ordinary skill in the art would remain the same whether the Challenged Claims are given a priority date of August 2002, February 2016, or May 2020.

83. I had enough education and experience to have qualified as a person of ordinary skill in the art in 2002, 2016, and 2020.

X. SUMMARY OF OPINIONS

84. It is my opinion that Claims 1-22 and 28 (i.e., claims that require an "oxide of titanium) cannot claim priority prior to February 19, 2016. It is also my opinion that Claims 26, 27 and 28 (i.e., claims that require a specific contact resistivity "of less than 10 $\Omega-\mu m^2$" or "of less than 1 $\Omega-\mu m^2$") cannot claim priority prior to May 12, 2020. Thus, Grupp '483, which issued in 2007, is prior art to certain Challenged Claims (Claims 1-22, 26-28) of the '880 Patent. Thus, Grupp '483 anticipates all these claims (i.e., Claims 1-22 and 26-28), as I explain below in **Section XI.B**. This is summarized below with the aid of a family tree:

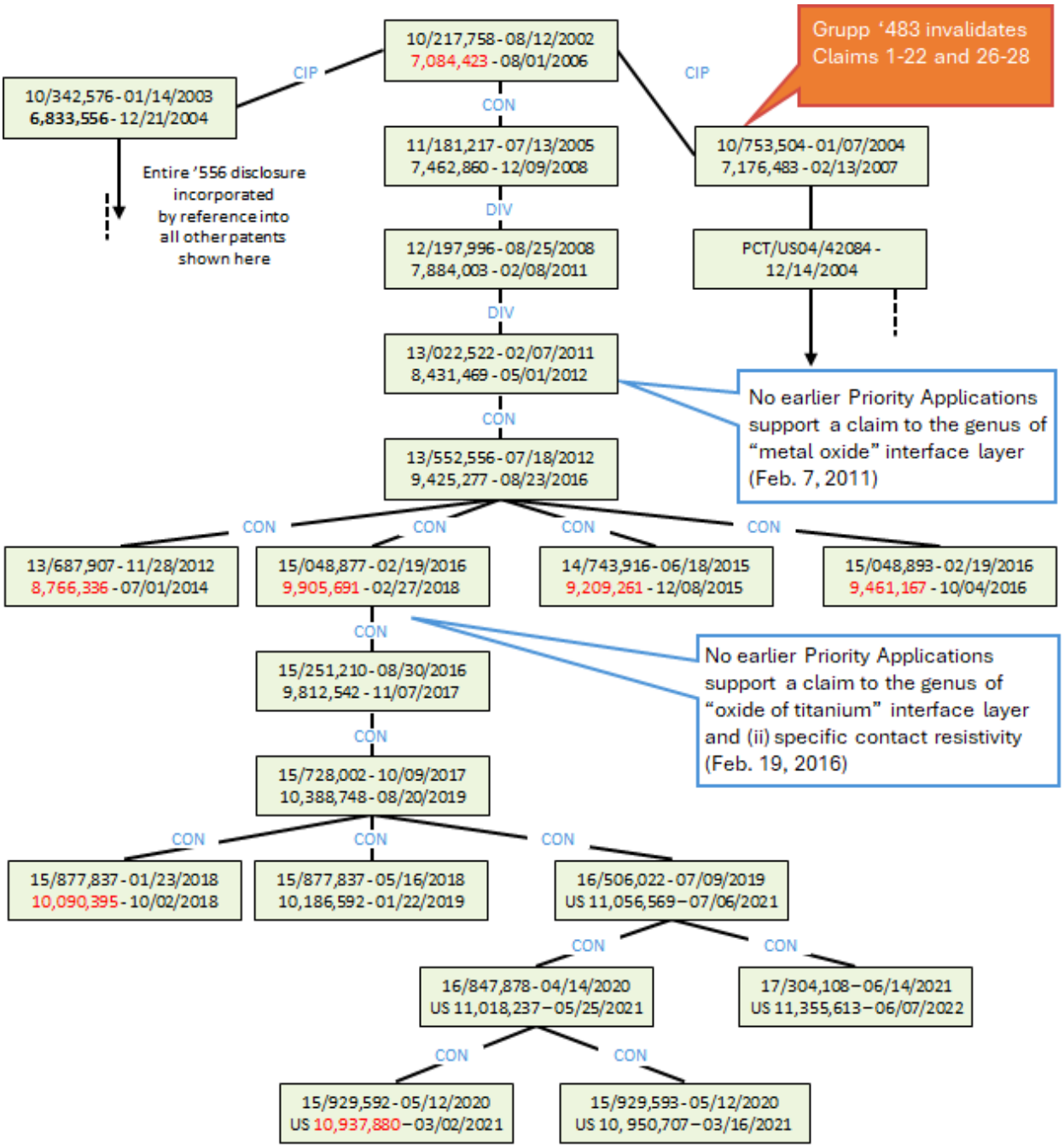

85. It is my opinion that Claims 23, 24 and 25 are not entitled to the priority date of earlier than August 12, 2002. Jammy (Ex. 1101) was filed on April 20, 1999. Jammy is prior art to these claims. Jammy renders Claims 23-25 obvious.

XI. OPINIONS

A. The parent applications of the ’880 Patent do not adequately describe an interface layer that comprises an “oxide of titanium”

86. My analysis and conclusions in this Section are applicable to the Claims 1-22 and 28 of the ’880 Patent.

1. The specification of ’880 Patent and its parent applications describe only a TiO_2 spacer layer

87. Claims 1-22 and 28 recite or depend on a claim that recites an interface layer comprising an “oxide of titanium” or a generic “metal oxide compris[ing] an oxide of titanium.” I have been asked to consider whether the parent applications of the ’880 Patent provide written description support for an interface layer comprising an “oxide of titanium” or a “metal oxide compris[ing] an “oxide of titanium” as recited in Claims 1-22 and 28.

88. It is my opinion that the patent applications and patents to which the ’880 Patent claims priority (“Priority Applications”) do not provide sufficient disclosure regarding which specific “oxides of titanium” would be encompassed by the claimed interface layer comprising “an oxide of titanium.” And, importantly, the Priority Applications do not provide sufficient disclosure regarding which of these “oxides of titanium”—other than TiO_2—were in the inventors’ possession at the time of the Priority Applications.

89. To reach this conclusion, I have reviewed each of the Priority Applications. Those patent applications and patents are listed in the table below, with each row for each application and its corresponding patent:

Application	Citation	Issued Patent	Citation
10/217,758	Ex. 1002, at 5-52	7,084,423	Ex. 1003
11/181,217	Ex. 1006, at 3-42	7,462,860	Ex. 1007
12/197,996	Ex. 1008, at 8-48	7,884,003	Ex. 1009
13/022,522	Ex. 1010, at 14-51	8,431,469	Ex. 1011
13/552,556	Ex. 1012, at 6-46	9,425,277	Ex. 1013
15/048,877	Ex. 1014, at 12-17, 35-65	9,905,691	Ex. 1015
15/251,210	Ex. 1016, at 12-48	9,812,542	Ex. 1017
15/728,002	Ex. 1018, at 51-87	10,388,748	Ex. 1019
15/887,837	Ex. 1130, at 12-32	10,090,395	Ex. 1129
16/506,022	Ex. 1124, at 62-90	11,056,569	Ex. 1125
16/847,878	Ex. 1126, at 62-91	11,018,237	Ex. 1127
15/929,592	Ex. 1020, at 66-94	10,937,880	Ex. 1001

90. I observe that those parent applications and issued patents (i.e., Priority Applications) have the same specifications and figures as the ’880 Patent. Thus, I principally address the ’880 Patent’s specification and figures herein, with the understanding that the specifications and figures of the parent applications of the ’880

Patent are identical. But, the abstracts and claims differ somewhat. I have also considered those abstracts and claims and address them to the extent they affect my analysis.

91. While the ’880 Patent and its parent applications do describe a TiO_2 spacer layer—“[s]pacer layers may be used with lower barriers (e.g., TiO_2 has a barrier of less than 1 eV)”—no other oxides of titanium are described for use as an interface layer in the specification of either the ’880 Patent or its parent applications. (*E.g.,* Ex. 1001 [’880 Patent] at 18:6-8.)

92. I have also reviewed U.S. Patent No. 6,833,556 (Ex. 1005) and the application from which that patent issued. (Ex. 1004 at 4-44.) I understand that U.S. Patent No. 6,833,556 is incorporated by reference in each of the parent applications of the ’880 Patent.

93. None of the parent applications before U.S. Patent App. No. 15/048,877 describes an interface layer comprising an “oxide of titanium,” *i.e.,* that the genus of titanium oxide can comprise or be ***any*** oxide of titanium. The originally-filed claims of U.S. Patent App. No. 15/048,877 are the first instance in any of the parent applications of the ’880 Patent where the patentee described a generic “oxide of titanium.” (Ex. 1014 [File History of U.S. Patent No. 9,905,691] at 62.) U.S. Patent App. No. 15/048,877 was filed on February 19, 2016. (*Id.* at 1.) Though claim 18 of U.S. Patent No. 9,425,277 recites the term “a titanium oxide,” the originally-filed

claims submitted along with U.S. Patent App. No. 13/022,522 do not recite the term "a titanium oxide." (Ex. 1012 [File History for U.S. Patent No. 9,425,277] at 38-39.) The "a titanium oxide" was added on June 5, 2014 as part of a new claim in the response to a non-final office action dated February 26, 2014. (*Id.* at 152-173, 176-178.)

94. Further, although U.S. Patent No. 6,833,556 (incorporated by reference into the '880 patent) does describe both a generic metal oxide and specific examples of zinc oxide, aluminum oxide, zirconium oxide, and hafnium oxide (Ex. 1005 [U.S. Patent No. 6,833,556] at 7:60-8:22, 13:44-14:20), that patent does not provide any further disclosure about oxides of titanium. Further, the metal oxides in U.S. Patent No. 6,833,556 are used to prevent the flow of current between a transistor's gate and the transistor's channel so as to electrically isolate the gate from the channel. (Ex. 1005 [U.S. Patent No. 6,833,556] at 7:60-8:5.) That patent does not describe using any of those metal oxides (or oxides of titanium) as an interface layer through which current flows as is described and claimed in the '880 Patent. (Ex. 1001 ['880 Patent] at 14:58-65.)

95. Thus, the only example of an "oxide of titanium" suitable as an interface layer or metal oxide described in either the '880 Patent or its parent applications is the TiO_2 spacer layer described in the '880 Patent and its parent applications: "[s]pacer layers may be used with lower barriers (e.g., TiO_2 has a barrier of less than 1 eV)."

(*E.g.,* Ex. 1001 ['880 Patent] at 18:6-8.) But, neither the specification of the '880 Patent nor the specifications of its parent applications equate spacer layers with "lower barriers" to the genus of oxides of titanium. The lone example of TiO_2 spacer layer in the priority applications and a passing mention of a spacer layer presenting a "barrier of less than 1 eV" does not reflect the variation across the genus of oxide of titanium, and cannot support claims to the entire genus of "oxide of titanium." I also note that Acorn (i.e., Patent Owner during the Acorn/Samsung Litigation) has itself alleged that inserting an insulating interface layer between a metal and a semiconductor was "counter-intuitive" because "an insulating interface layer was not generally considered to be a solution for applications where the goal was to reduce resistance in a design. This is because adding an insulating layer between a metal and a semiconductor typically ***increases*** resistance in the design. The idea of ***adding*** an insulating layer to ***reduce*** resistance is counterintuitive." (Ex. 1038 [Acorn Complaint] ¶ 48 (emphasis in original); *see also* Ex. 1095 [Oak IP Complaint] ¶¶ 37, 38.) I also understand that Oak's Complaint also alleges that the inventors found this result "remarkable." (Ex.1095 ¶¶ 37-39.)

96. I also understand that during the prosecution of the '569 Patent, the '237 Patent, and the '880 Patent, the applicant was able to overcome rejections by the Examiner by filing appropriate terminal disclaimers. (Ex. 1126 [File History '237 Patent], Ex. 1124 [File History '569 Patent], Ex. 1020 [File History '880 Patent].)

During the prosecution of these patents, the Examiner did not comment upon the priority of the pending claims.

2. Genus of "oxide of titanium" includes numerous species that include oxygen and titanium atoms

a) Genus of "oxide of titanium" includes numerous stoichiometric and non-stoichiometric binary compounds containing oxygen and titanium

97. The term "oxide of titanium" describes a very broad genus with a very large number of binary compounds of oxygen and titanium, i.e., compounds containing only oxygen and titanium atoms. The breadth of the "oxide of titanium" genus is exacerbated because the genus of "oxide of titanium" does not include only stoichiometric compound species but also non-stoichiometric compound species.

98. The "stoichiometric compounds" have compositions where the atom ratios are given by integers. For example, titanium oxide has multiple equilibrium compound forms, including but not limited to: TiO, Ti_2O, Ti_3O, TiO_2, Ti_2O_3, Ti_3O_5, and Ti_4O_7. (Ex. 1056 [1987-Murray] at Fig. 1.) 1987-Murray shows these variations of titanium oxide in Figure 1:

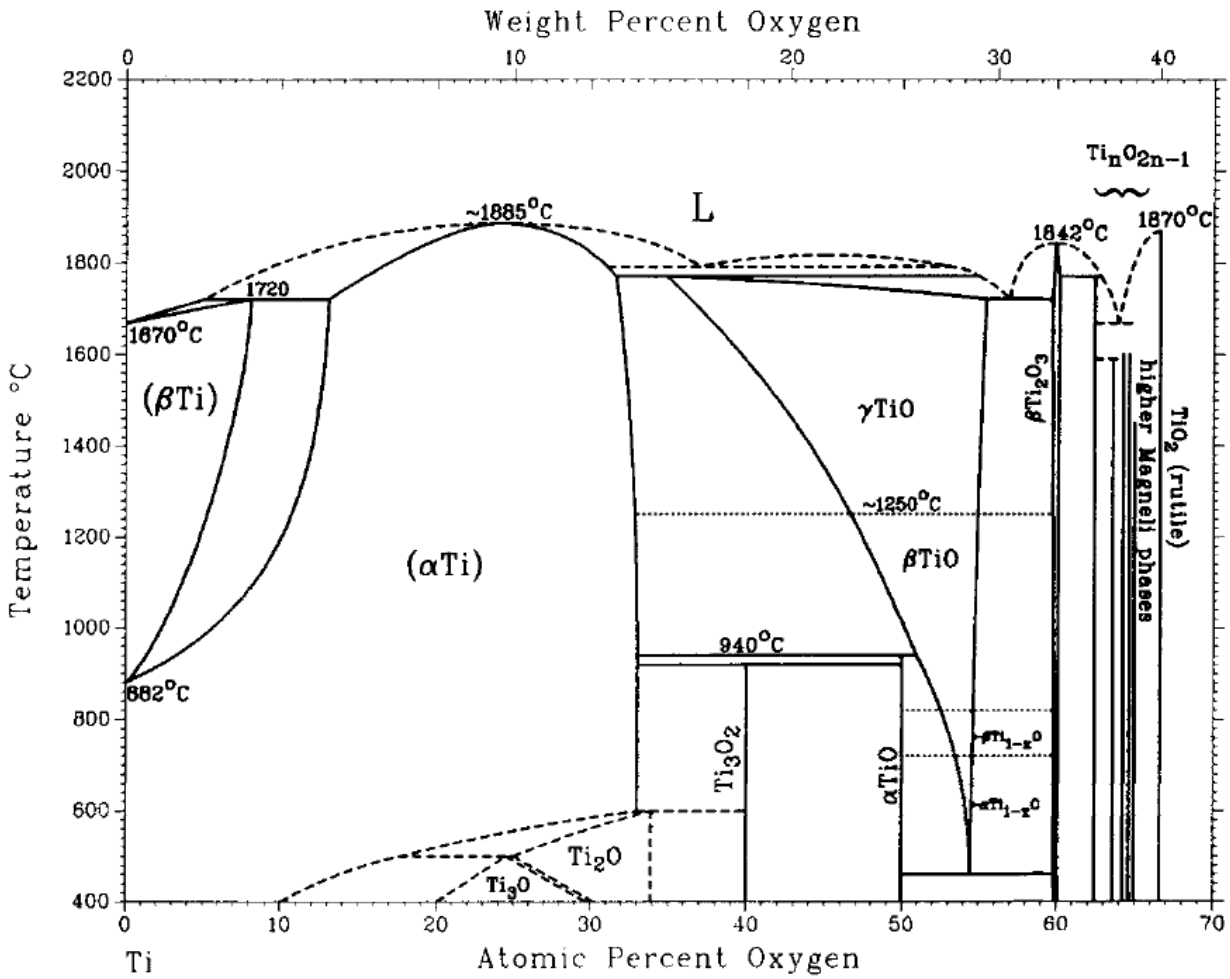

(*Id.*)

99. But the genus of "oxide of titanium" is not limited to equilibrium compounds in this area of technology. The "non-stoichiometric compounds" have compositions where the atom ratios are not given by integers. In the field of semiconductors, both stoichiometric and non-stoichiometric forms of titanium oxide are commonly used. (Ex. 1056 [1987-Murray].) These non-stoichiometric compounds are generally considered to be non-equilibrium—that is, they are not at the lowest possible energy state due to being non-stoichiometric with some bonds being

unsatisfied. For example, as opposed to stoichiometric compounds, such as TiO (atom ratio is 1-to-1) and TiO_2 (atom ratio is 1-to-2), TiO_{1-x}, or TiO_{2-x} are non-stoichiometric (having a non-integer atom ratio) and thus non-equilibrium compounds. Non-stoichiometric variations of titanium oxide thereby include compounds such as TiO_{1-x} or TiO_{2-x}. Non-stoichiometric variations of titanium oxide (such as TiO_{1-x}, or TiO_{2-x}) can form when using a non-stoichiometric deposition technique such as PVD. (Ex. 1048 [Dr. Kuhn's Deposition Transcript from 7-6-2021] at 50:25-51:13 ("Q: Each metal oxide has multiple species; correct? A: That's a more complicated question that it sounds. You can have various equilibrium compounds for a metal oxide. So, for example, titanium oxide might have TiO_2 or Ti_2O_3 or Ti_3O_5, something like that. Those are equilibrium stable compounds. But in the semiconductor industry, you can also have nonequilibrium compounds because these products are fabricated in nonequilibrium conditions. So there are potential for many more possibilities within a family than the traditional stable equilibrium compounds.").) For example, oxides of titanium that can form may not be stoichiometric compounds, such as Ti_2O_3, but can have oxygen deficiency variations such as Ti_2O_{3-y}, depending on the conditions under which those oxide of titanium are formed. Indeed, when depositing a titanium oxide in an oxygen-deficient environment leaves no choice but to form an oxygen-deficient non-equilibrium species of a titanium oxide. Such compounds are referred to as non-

equilibrium compounds because they will continue to oxidize over long periods of time until they reach a stable stoichiometric composition.

b) Genus of "oxide of titanium" includes numerous ternary compounds containing oxygen, titanium and another element

100. The term "oxide of titanium" describes a very broad genus with a very large number of underlying species if the genus includes compounds of oxygen, titanium, and another element, such as silicon. In addition to compounds of $TiSi_xO_y$ (titanium silicate) discussed below in **Section XI.A.3.a)**, examples of ternary oxides of titanium include but are not limited to the following:

- TiN_xO_y (titanium oxynitride). (*See* Ex. 1077 [1999-Gwo] at 1092 ("We suggest a formation of **TiN_xO_y** graded oxide layer in the near surface region.").)
- TiOC (titanium oxycarbide). (*See* Ex. 1073 [1984-Shikama] at 197 ("preferential removal of carbon and the formation of **titanium oxycarbide** when titanium carbide (TiC) was sputtered by argon ions in the presence of oxygen").)
- $TiGeO_4$ (titanium germanate). (*See* Ex. 1072 [1991-Glebov] at 59 ("**Titanium-germanate** glasses and waveguides feature the high refractive indices (n = 1.77).").)
- $Ti_xCr_{2-x}O_3$ (titanium chromium oxide). (*See* Ex. 1071 [2013-Rangel-Kuoppa] at 23 ("Among the novel metal-oxide semiconductors, **$Ti_xCr_{2-x}O_3$**

(TiCrO) is one whose electrical properties and the formation of ohmic contacts on it have not been explored extensively.”).)

- $SrTiO_3$ (strontium titanate). (*See* Ex. 1067 [2000-Pontes] at Abstract (“**$SrTiO_3$** thin films were prepared by the polymeric precursor method and deposited by spin-coating onto $Pt/Ti/SiO_2/Si(100)$ substrates.”).)
- TiAlO (titanium aluminate). (*See* Ex. 1070 [2003-Nguyen] at Abstract (“In this report, we attempt to address and improve the methodology of the ellipsometric application to this class of materials by investigating, in particular, metal oxides of hafnium aluminates and **titanium aluminates**.”).)
- $BaTiO_3$ (barium titanate). (*See* Ex. 1060 [1992-Roy] at Abstract (“Thin films of **$BaTiO_3$** were deposited on platinum coated silicon substrates by excimer laser (248 nm) ablation at 600 °C or *ex situ* crystallized at about the same annealing temperature.”).)
- Mg_2TiO_4 (magnesium titanate). (*See* Ex. 1065 [1993-Imai] at Abstract (“Formation of **Mg_2TiO_4** occurs at the interface between the MgO layer and the TiOx layer and/or at the grain boundary of the superlattice.”).)
- Ca_2TiO_4 (calcium titanate). (*See* Ex. 1061 [2000-Hao] at Abstract (“We found that the dielectric constants of 1-μm-thick **$CaTiO_3$** films are very close to that observed in the bulk materials.”).)
- $Li_{0.5}TiO_2$ (lithium titanate). (*See* Ex. 1064 [2001-van-de-Krol] at 2235 (“Special attention will be devoted to the properties of **$Li_{0.5}TiO_2$**.”).)

101. As depicted in the list above, ternary titanates are three-element compounds that include titanium, oxygen and one other element. I estimate that the

number of possible species to be at least 10 but more likely to be more than 20. Like the binary compounds of titanium and oxygen discussed above, there are variations in the properties of ternary compounds. Each ternary titanate genus is a species of the "oxide of titanium" genus with different characteristics making them of interest for multiple applications. (Ex. 1068 [2014-Doeff] at 5 (noting that "ternary titanates, particularly those belonging to the Na-Ti-O system, have diverse structural and physical characteristics making them of particular interest for use in batteries, as well as other applications.").)

3. Patent Owner agrees that the "oxide of titanium" genus includes numerous species that include oxygen and titanium atoms

a) Patent Owner interprets the "oxide of titanium" genus to include silicon besides oxygen and titanium

102. I have reviewed **Section XI.A.2.a** of the Petition and concur that Oak IP and Acorn have alleged that the "oxide of titanium" encompasses other elements besides oxygen and titanium, such as silicon.

103. As discussed in **Section XI. A.4** *infra*, there are numerous different ternary compounds in the genus of "oxide of titanium," which renders the scope of the genus of "oxide of titanium" extremely broad.

b) Acorn interpreted the "oxide of titanium" genus to include non-stoichiometric, non-equilibrium compounds with varying levels of oxygen

104. I have reviewed **Section XI.A.2.b** of the Petition and concur that Acorn has alleged that all compounds of titanium, silicon and oxygen fall within this genus of "oxide of titanium" irrespective of the level of oxygen content.

105. Oak IP's and Acorn's infringement allegations make clear that they interpret the term "oxide of titanium" to be a very broad genus with a very large number of underlying species containing varying amounts of titanium, silicon and oxygen.

4. Different species in the "oxide of titanium" genus can have different electrical and structural properties

106. The genus of "oxide of titanium" includes not only dielectric compounds (i.e., insulators) but also metallic compounds and semiconductive compounds. The '880 Patent does not provide any guidance regarding which species of the genus are suitable to form an interface layer. This is because different types of "oxide of titanium" can have vastly different electrical and structural properties.

107. There are many different properties that affect the characteristics of the compound and the applications for which the compound may be employed. For example, a non-limiting list of such properties include: (a) electrical (tunneling and bulk) conductivity (*or* resistivity); (b) barrier height; (c) electron affinity; (d) bandgap energy; (e) dielectric constants; (f) structural characteristics; (g) melting point; and (h)

optical transparency. I note that the melting point is indicative of high-temperature structural stability which is of interest for reliability considerations. I also note that the optical transparency gives an indication of the bandgap energy, with opaque materials having a lower bandgap energy, and transparent materials having a higher bandgap energy. I finally note that changes in the chemical composition of a material cause changes in the bandgap energy, which in turn cause changes in the electrical properties.

108. As discussed below, ranges of these properties in the genus of "oxide of titanium" demonstrate that some species of "oxide of titanium" are not suitable for the interface layer. Moreover, relevant properties of some species are not known.

a) Electrical Conductivity (or resistivity)

109. Electrical conductivity measures how easily electricity flows through a material. I understand that the Board has noted that "[t]he electrical conductivity of a metal oxide is an important property for the recited genus because electrical conductivity directly affects the specific contact resistance of a junction, which is an important property for the '395 patent's disclosure." (Ex. 1091 [Grupp '483 IPR] at 20 n.3.). Because the '395 and '880 Patents share the same specification, the electrical conductivity of an oxide of titanium is an important property for the purported invention of the '880 Patent as well. Fig. 8 of the '880 Patent depicts a graph of interface-specific contact resistance versus interface thickness. (Ex.1001 ['880 Patent] at 14:27-30.). When discussing the graph of Fig. 8, the '880 Patent

notes the importance of resistance when it states that "[t]he present inventors have discovered that this competition results in an optimum thickness, as shown in the illustration, ***where the resistance is a minimum***." (*Id.* at 14:42-65.)

110. The electrical conductivity of an "oxide of titanium" used in an interface layer in a metal-semiconductor junction is important because it directly affects the specific contact resistivity of the junction. Specifically, carrier transport through an "oxide of titanium" interface layer may proceed through tunneling and/or thermionic emission. Whereas tunneling is expected to dominate for high barriers (such as Si-Al_2O_3), thermionic emission is expected to be a factor for lower barriers (such as Si-TiO_2). The genus of "oxide of titanium" exhibits such a wide range of properties such that a person of ordinary skill cannot discern a common property for all the species in the genus. For example, TiO (Titanium monoxide) has metallic properties, and would not pose any tunnelling barrier. TiO_2 is considered a semiconductor (due to its bandgap energy value of about 3 eV) and it has a low tunneling barrier (around 1 eV) when used as an interface layer in a metal-interface layer-silicon structure.

111. It is common in the art to categorize materials based on their electrical conductivity (or electrical resistivity, which is the reciprocal of electrical conductivity) into three categories:[1]

- Conductive materials that include metals and metallic materials have high electrical conductivity (10^4 to 10^8 /Ω cm) and low electrical resistivity (10^{-8} to 10^{-4} Ω cm).
- Semi-conductive materials that include semiconductors, such as silicon, have medium electrical conductivity (10^{-7} to 10^3 /Ω cm]) and medium electrical resistivity (10^{-3} to 10^7 Ω cm).
- Non-conductive materials that include insulators and dielectric have low electrical conductivity (10^{-18} to 10^{-8} Ω cm) and high electrical resistivity (10^8 to 10^{18} Ω cm).

[1] Conductors, semiconductors, non-conductors: Conductors have electrical resistivity on the order of 10^{-8} to 10^{-4} Ω cm, whereas insulators have electrical resistivity on the order of 10^8 to 10^{18} Ω cm. Semiconductors have an electrical resistivity value between those of conductors and insulators, approximately 10^{-3} to 10^7 Ω cm. (*See* Ex. 1115 [Toshiba] at 1.)

112. It was well-known to a POSITA that many factors may affect electrical conductivity of an oxide of titanium (as interpreted by the Patent Owner), such as the composition, environmental conditions, growth (deposition) conditions, and oxygen content. Thus, these factors may determine whether a species of oxides of titanium is conductive (metallic), semi-conductive, or non-conductive (insulative). Each of these factors is explained in detail below.

(1) Composition of an oxide of titanium

113. ***First***, it was known that the chemical composition of an oxide of titanium may affect its electrical conductivity. Especially, it was well-known that conductivity of an oxide of titanium depends on its oxygen content. For example:

- **Conductive (Metallic)**: TiO (titanium monoxide), which has an atomic oxygen content of 50%, is an oxide of titanium with metallic properties. TiO has an electrical resistivity (ρ)[2] of 2.0×10^{-6} to 2.5×10^{-6} Ω m which has been characterized as metallic and is a good conductor. (*See* 1063 [1966-Denker] at 142, 145-149; *see also* Ex. 1083 [U.S. 4,912,286 (Clarke)] at 2:29-34 ("invention also provides a structure which comprises a titanium-sub-oxide of formula TiO_x in which x is less than 2, which is in a form suitable for use as an electrical conductor.").) The properties of Ti_3O and Ti_2O are not well known, yet are expected to exhibit metallic properties

[2] Electrical conductivity is the reciprocal of electrical resistivity.

(because the content of Titanium in Ti_3O and Ti_2O is even higher than the content of Titanium in TiO).

- **Semi-conductive**: TiO_2 (titanium dioxide) is an oxide of titanium with semi-conductive properties (which may vary depending on the impurity content). TiO_2 has an electrical resistivity (ρ) ranging from 1×10^4 to 1×10^7 Ω m. (*See* Ex. 1078 [1978-Takeuchi] at 88).
- **Non-conductive (Insulator)**: $TiSiO_4$ (titanium silicon oxide), which has an atomic oxygen content of 66%, is an oxide of titanium (containing a third element of silicon) with insulating properties. As discussed above, Patent owner interprets the genus of "oxides of titanium" to contain a third element such as silicon. $TiSiO_4$ has an electrical resistivity (ρ) of 10^8 to 10^{10} Ω m. (*See* Ex.1035 [2005-Brassard] at 054912-6).

Accordingly, the genus of "oxides of titanium," as understood by Patent owner, spans about 15 orders of magnitude in electrical resistivity and includes metallic, semi-conductive, and insulating properties.

114. It was also well-known that conductivity of an oxide of titanium depends on its oxygen content, even among the species that are composed of the same elements. For example, in case of an oxide of titanium that is composed of titanium, silicon, and oxygen, i.e., $TiSi_xO_y$, it was well-known that conductivity of the compound varies widely depending on the level of oxygen content of the compound. Brassard et al. showed that the electrical properties of $TiSi_xO_y$ changed considerably depending upon the level of oxygen content in the compound. Fig. 6(c) of 2005-Brassard (shown

below) demonstrates "a strong correlation between the [electrical] resistivity of the [] titanium silicate films and their oxygen content." (*Id.* at 054912-7) "[T]he resistivity of the titanium silicate films is seen to vary in a strikingly exponential way" from a low of 10^{-2} Ω cm to a high of 10^{12} Ω cm (almost as wide as 14 decades) as the level of oxygen content is increased. (*Id.*; *see also* Ex. 1083 [U.S. 4,912,286 (Clarke)] at 4:14-16 (noting that the "conductivity of the electrical conductor of the invention is dependent inter alia on the value of x in the titanium sub-oxide TiO_x in the structure.").

115. Fig. 6(c) of 2005-Brassard (shown below) further shows that titanium silicates ($TiSi_xO_y$) with high levels of oxygen content are insulating. For example, consider $TiSiO_4$. The atomic oxygen content of this compound is 66.6%, and its oxygen ratio (x-axis in Fig. 6(c)) is 2.0.[3] Fig. 6(c) of 2005-Brassard shows that the

[3] The atomic oxygen content is calculated by the number of oxygen atoms divided by the total number atoms: for example, for $TiSiO_4$, [O] / ([Ti] + [Si] + [O]) = 4 / (1 + 1 +4) = 4/6 = 66.6%. The oxygen ratio is calculated by the number of oxygen atoms divided by the sum of the number of silicon (Si) atoms and the number of titanium (Ti) atoms: for example, for $TiSiO_4$, [O] / ([Si] + [Ti]) = 4 / (1+1) = 2.0. The rectangular brackets […] indicate the atomic concentration of the element. (*See* Ex. 1033 [2004-Brassard].)

resistivity of $TiSiO_4$ is about 10^{12} Ω cm, which confirms that $TiSiO_4$ is an insulator. (Ex. 1035 [2005-Brassard] at 054912-6; Ex. 1033 [2004-Brassard] at 2306.)

116. On the other hand, titanium silicates ($TiSi_xO_y$) with lower levels of oxygen content are conductors and behave like metallic compounds. Consider $TiSiO_2$. The atomic oxygen content of this compound is 50%, and its oxygen ratio is 1. (Ex. 1033 [2004-Brassard].) Although there is sparse technical literature describing the resistivity of $TiSiO_2$, its resistivity can be estimated by considering a 1:1 mixture of TiO and SiO—which, like $TiSiO_2$, has 25% Ti, 25% Si, and 50% O. It is well established that TiO has metallic properties, (Ex. 1063 [1966-Denker] at 149), and SiO is a semiconductor with a bandgap energy of 2.25 eV. 1984-Al-Ani reported that SiO has a bandgap energy of 2.25 eV (experimental value), (Ex. 1057 [1984-Al-Ani] at 1740), and 2020-Chen reported that SiO has a bandgap energy of 1.52 eV (calculated value). (Ex. 1088 [2020-Chen] at Abstract.) Because $TiSiO_2$ can be considered a mixture of a metallic compound (TiO) and a semiconducting compound (SiO), it is reasonable to expect that $TiSiO_2$ will have a conductivity that is somewhere between metallic and semiconducting. Fig. 6(c) of 2005-Brassard, after extrapolation, confirms that at the oxygen ratio of 1, the electrical resistivity is approximately 10^{-6} Ω cm, which confirms that $TiSiO_2$ is a conductor. (Ex. 1035 [2005-Brassard] at 054912-6, Fig. 6(c).)

117. Low levels of oxygen content in a titanium silicate layer results in a layer with sufficiently low resistivity that the layer is suitable as a conductor. (Ex. 1053 [1984-Robb] at 2906 (noting that "resistances as low as 1 Ω / ϒ have been obtained on titanium silicide films containing 5% oxygen"). (Ex. 1082 [1989-Hallock] at 191 (noting that resistivity of titanium silicide films was acceptable when deposited using a sputtering gas composition of 25% oxygen and 75% Argon).) 1989-Hallock suggests that an atomic oxygen content of 36% is acceptable for titanium silicide serving as a conductor.

118. In other words, the genus of "oxides of titanium" is highly diverse with respect to electrical resistivity with no commonality among the different species. And given the vast number of compositions of compounds in the "oxides of titanium" genus, a POSITA may not have been able to find sufficient scientific literature to categorize the conductivity of some oxides of titanium.

(2) Environmental Conditions

119. ***Second***, it was known that environmental conditions may affect electrical conductivity of an oxide of titanium. For example, it was known that Ti_3O_5, a species of oxides of titanium, is a semiconductor at room temperature but becomes conductive at elevated temperatures. (Ex. 1062 [1987-Shveikin] at 21 ("The semiconductor-metal phase transition accompanied by a sharp change of electric, magnetic, structural, and other characteristics, occur in Ti_3O_5 oxide at 450 K.").)

(3) Growth (Deposition) Conditions

120. ***Third***, it was known that growth (deposition) conditions of an oxide of titanium may affect its electrical conductivity. For example, the electrical conductivity of titanium silicate[4] ($TiSi_xO_y$) change considerably —from a metal to an insulator— depending upon their growth conditions (e.g., film deposition conditions), including oxygen pressure and deposition temperature.

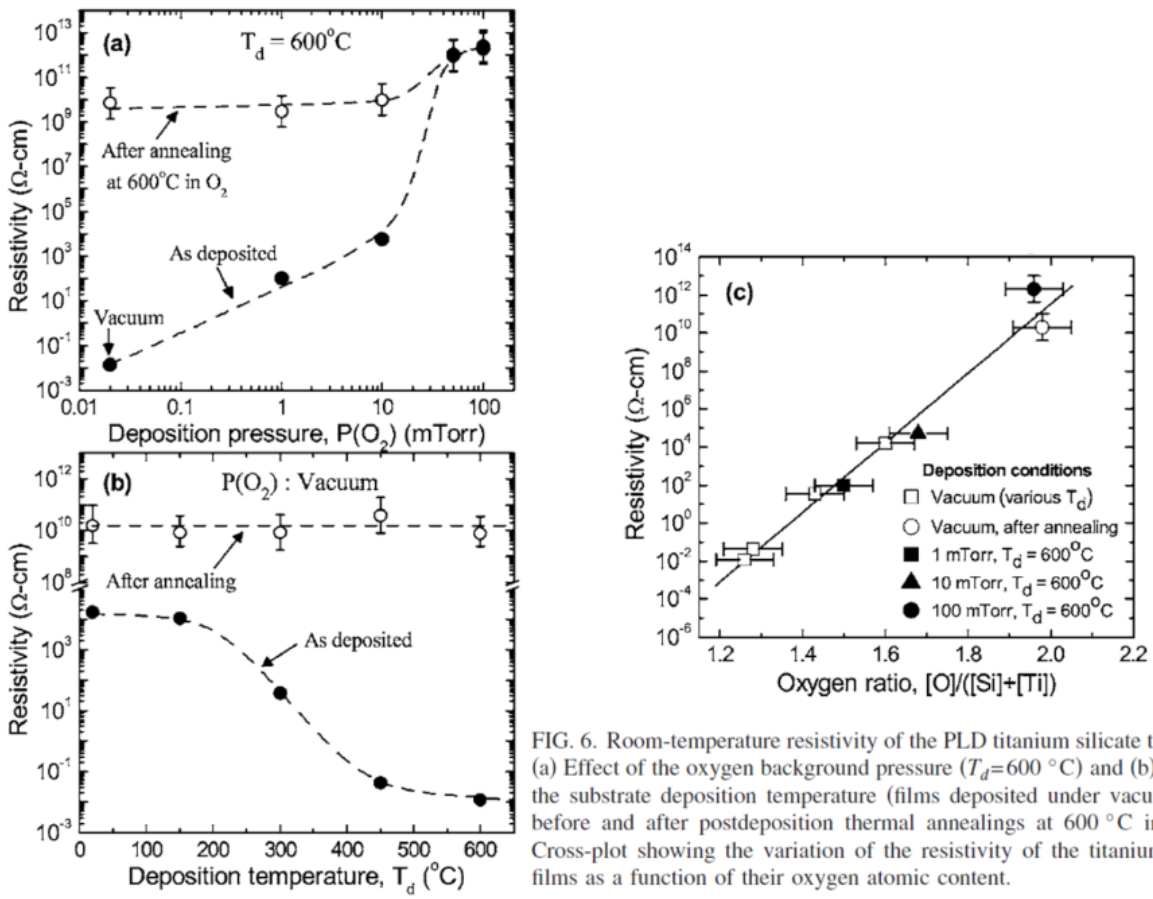

FIG. 6. Room-temperature resistivity of the PLD titanium silicate thin films. (a) Effect of the oxygen background pressure (T_d=600 °C) and (b) effect of the substrate deposition temperature (films deposited under vacuum) both before and after postdeposition thermal annealings at 600 °C in O_2. (c) Cross-plot showing the variation of the resistivity of the titanium silicate films as a function of their oxygen atomic content.

[4] As discussed supra **Section XI.A.3**, ternary compounds of titanium oxide are also "oxides of titanium" under Patent Owner's interpretation.

(Ex. 1035 [2005-Brassard] at 054912-6, Fig. 6.)

121. **Oxygen Pressure:** The electrical conductivity of an oxide of titanium may depend on the oxygen pressure during deposition. Fig. 6(a) of 2005-Brassard shows the effect of oxygen pressure ($P(O_2)$) on the electrical resistivity (i.e., the reciprocal of electrical conductivity) of titanium silicate thin films. (Ex. 1035 [2005-Brassard] at 054912-6; *see also* Ex. 1033 [2004-Brassard] at 2306.) When the oxygen pressure was low when the film was deposited, "the resistivity is found to be surprisingly low for $P(O_2) < 50$ mTorr (ρ as low as 1.2×10^{-2} Ω cm)." (Ex. 1035 [2005-Brassard] at 054912-7.) "On the other hand, the [electrical] resistivity is seen to increase rapidly when $P(O_2)$ is increased," and "highly insulating films with a resistivity of about 10^{12} Ω cm are obtained for $P(O_2) \geq 50$ mTorr." (*Id.*)

122. **Deposition Temperature:** The electrical conductivity of an oxide of titanium may depend on the deposition temperature. For example, Brassard et al. showed that electrical resistivity (inverse of electrical conductivity) of a $TiSi_xO_y$ film changes significantly with the deposition temperature (T_d) of the film. Fig. 6(b) of 2005-Brassard shows that "the [electrical] resistivity of the [titanium silicate] films deposited under vacuum is shown to decrease from 1.6×10^4 to 1.2×10^{-2} Ω cm when the T_d is increased from 20 to 600° C." (*Id.*)

123. In light of the broad range of variation in conductivity within the genus of oxide of titanium depending on the composition, environmental conditions, and

growth (deposition) conditions, the disclosure of "TiO_2" with "a barrier less than 1 eV" alone does not convey to a POSITA that the inventors had possession of the entire genus of oxide of titanium.

b) Barrier Height

124. In a metal-semiconductor junction, the barrier height represents the energy an electron needs to overcome to move from the semiconductor to the metal or vice versa. Thus, barrier height influences the electrical characteristics of the junction, and impacts current flow. (Ex. 1107 [Sze Textbook] at 72-74.) Fig. 2(a) from the Sze Textbook (excerpted below) is the energy band diagram of an isolated metal adjacent to an isolated n-type semiconductor and Fig. 2(b) from the same textbook is a diagram for a metal-semiconductor junction:

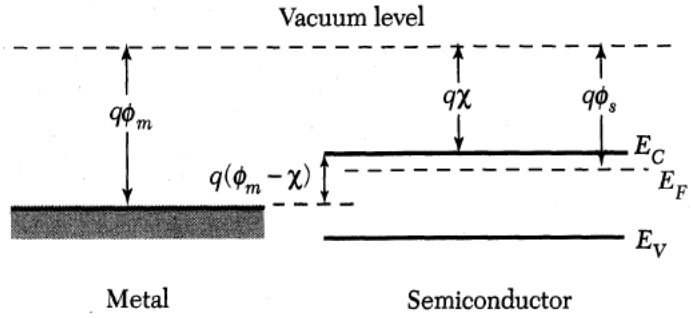

(a)

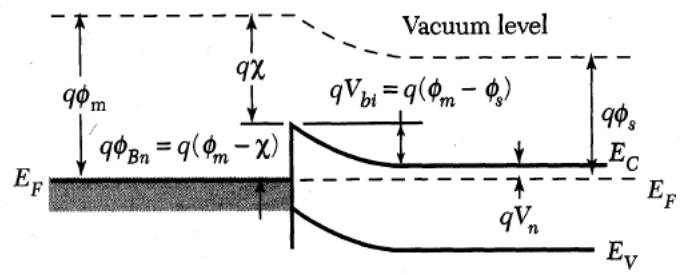

(b)

(Ex. 1107 [Sze Textbook], Figs. 2(a), 2(b), and 226.) The concept of barrier height is related to work function and electron affinity, and as shown in Fig. 2(b), barrier height ($q\varphi_{Bn}$) in a metal-semiconductor junction is the difference between the metal's work function and the semiconductor's electron affinity:

$$q\varphi_{Bn} = q\varphi_m - q\chi$$

(Ex. 1107 [Sze Textbook] at 226.) The electron affinity $q\chi$ is the energy difference between the conduction band edge E_c and the vacuum level in the semiconductor (i.e., level at which an electron has no potential energy). (*Id.*) The work function $q\varphi_s$ is the energy difference between the Fermi level E_F and the vacuum level in the semiconductor. (*Id.*) The work function of a metal $q\varphi_m$ is an inherent property of the

metal and does not vary (for a given metal). Thus, the barrier height varies along with the electron affinity $q\chi$. As shown in Fig. 2(b) (above), the choice of metal and the semiconductor to form the junction influences barrier height, which in turn influences the specific contact resistance. In the case of metal-to-semiconductor junctions, Bardeen states and metal-induced gap states play an additional role in determining the barrier height. In the case of semiconductor-to-dielectric junctions, these metal-specific contributions are absent.

125. The '880 Patent provides limited guidance regarding the barrier height of an "oxide of titanium." It merely states that "[s]pacers layers may be used with lower barriers (e.g., TiO_2 has a barrier less than 1 eV)." (Ex. 1001 ['880 Patent] at 18:6-7.)

126. However, species of the "oxide of titanium" genus do not necessarily fall within the characterized range of having a barrier less than 1 eV. For example, several ternary titanate compounds that fall within the genus of "oxide of titanium" (as interpreted by the current and prior Patent Owner) exhibit a barrier height that is equal to 1 eV or higher than 1 eV. For example, a thesis published in 2003 reported that "[t]he barrier height of titanium aluminate [TiAlO] escalates with the aluminum concentration." (Ex. 1094 [2003-Luo] at 164.) Specifically, this study observed that "the barrier heights of titanium aluminates with 15, 30, and 50 atomic % aluminum concentrations over Al Fermi-level are about 1 eV, 1.1 eV, and 1.5 eV respectively, as

shown in Figure 4.25." (Ex. 1094 [2003-Luo] at 164.) Figure 4.25 from 2003-Luo is excerpted below:

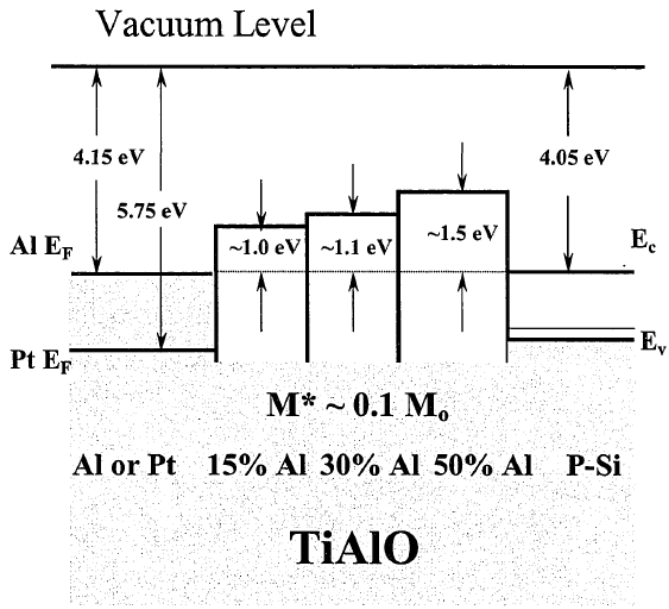

Figure 4.25 Band diagrams of titanium aluminates with 15, 30, and 50 atomic % aluminum concentrations.

(Ex. 1094 [2003-Luo] at 166, Fig. 4.25.)

127. The barrier heights of TiAlO relative to the silicon conduction band are also higher than or equal to 1 eV and not less than 1 eV, as calculated from data present in Figure 4.25. In Figure 4.25, 2003-Luo reports the barrier heights of TiAlO relative to the Fermi level of aluminum. According to Figure 4.25, E_F for aluminum is 4.15 eV below the vacuum level and E_C for silicon is 4.05 eV below the vacuum level. (Ex. 1094 [2003-Luo] at 165, Fig. 4.24.) Barrier height for TiAlO (50% Al) is 1.5 eV. Thus, the barrier height of TiAlO (50% Al) relative to silicon would be 1.5 eV – (E_F – E_C) =

1.4 eV. Similarly, the barrier heights of TiAlO (30% Al) relative to the silicon conduction band will be 1.0 eV. Thus, in some of these instances, the barrier heights of titanium aluminates relative to silicon conduction band (or the aluminum Fermi level) are higher than or equal to 1 eV and not less than 1 eV.

128. Claim 1 of the ’880 Patent requires an “interface layer” that is disposed between a contact metal and a source and drain of a transistor. Similarly, Claim 23 requires an “interface layer” that is ***disposed between and in contact*** with a conductor and a source or drain of a transistor. Finally, Claim 28 requires an “interface layer” that is ***disposed between and in contact with*** a contact metal and a source or drain of a field effect transistor. When the semiconductor substrate is in contact with the semiconductor oxide layer of the “interface layer,” the silicon-to-“interface layer” boundary has a barrier height that is particularly high for the Si-SiO_2 interface. The barrier height for the Si-HfO_2 and Si-ZrO_2 interface is also high. However, the barrier height is low for the Si-TiO_2 interface (“less than 1 eV”).

129. However, metallic compounds such as TiO (and likely Ti_3O and Ti_2O) do not form such a silicon-dielectric interface barrier (e.g., Si-HfO_2 and Si-ZrO_2)

because these titanium compounds are not dielectrics but rather metals.[5] When electrons flow out of the silicon towards the interface layer, they encounter a barrier for dielectrics such as SiO_2, HfO_2, ZrO_2, and TiO_2. The electrons do not encounter a barrier when they flow towards a layer made of metallic compounds, such as TiO, Ti_2O and Ti_3O. Accordingly, the metallic species of the genus "oxide of titanium" cannot be characterized as fitting the description of having "a barrier of less than 1 eV."[6]

130. In light of the broad range of variation in the bandgap energy within the genus of oxide of titanium, the disclosure of "TiO_2" with "a barrier less than 1 eV" alone does not convey to a POSITA that the inventors had possession of the entire genus of oxide of titanium.

---

[5] Titanium compounds such as TiO are metallic compounds, that is, they are metal-like. Such metallic compounds are occasionally referred to as "metals" in the field of semiconductor technology.

[6] When a dielectric is deposited on a semiconductor, a barrier forms at the semiconductor-dielectric interface. For Si and TiO_2, the '880 Patent discloses a barrier of less than 1 eV. Such a barrier is absent when TiO_2 (a semiconductor / dielectric) is replaced by TiO (a metallic compound). Instead, metal-semiconductor junctions have a Schottky barrier.

c) Electron Affinity

131. As discussed above, in a metal-semiconductor junction, electron affinity $q\chi$ is the energy required to move an electron from the bottom of the semiconductor's conduction band to the vacuum level. Electron affinity, along with the work function of a metal $q\varphi_m$, determines the barrier height of the junction and the resistance of the junction.

132. The electron affinity can be compared to the ionization energy of an atom. It takes the ionization energy to remove an electron from an atom (such as a hydrogen atom) and, similarly, it takes the electron affinity to remove an electron from a solid material (such as silicon material). Within the framework of energy band diagrams, the electron affinity is the energy difference between the conduction band edge and the vacuum level.

133. The electron affinity of an oxide of titanium used in an interface layer is important because the electron affinity determines the alignment of the bands; for example, how the conduction band of an insulator aligns with the Fermi level of a metal.

134. Compounds in the "oxide of titanium" genus have different electron affinities that affect the characteristics of the compound and the applications for which the compound may be employed.

135. Different compounds in the "oxide of titanium" genus have different electron affinities. If, in terms of electrical conductivity, the "oxide of titanium" behaves like a metal, its properties are more appropriately described by a metal work function. For example, TiO, which has metallic properties, is more appropriately described by the work function, (Ex. 1063 [1966-Denker] at 149); the electron affinity of TiO_2 (a semiconductor) is 4.0 eV, (Ex. 1087 [2017-Marques] at 506); the electron affinity of Ti_2O_3 is not well understood in the current literature, (Ex. 1076 [1982-Hong] at 214). Finally, electron affinity of $TiSiO_4$ may not be known.

136. In light of the broad range of variation in the electron affinity within the genus of oxide of titanium, the disclosure of "TiO_2" with "a barrier less than 1 eV" alone does not convey to a POSITA that the inventors had possession of the entire genus of oxide of titanium.

d) Bandgap Energy

137. The bandgap energy is the gap between the bottom of the conduction band and top of the valence band ($E_c - E_v$). (Ex.1107 at 29.) Fig. 15 from the Sze Textbook shows the conduction band and the valence band that are formed by bringing isolated silicon atoms together:

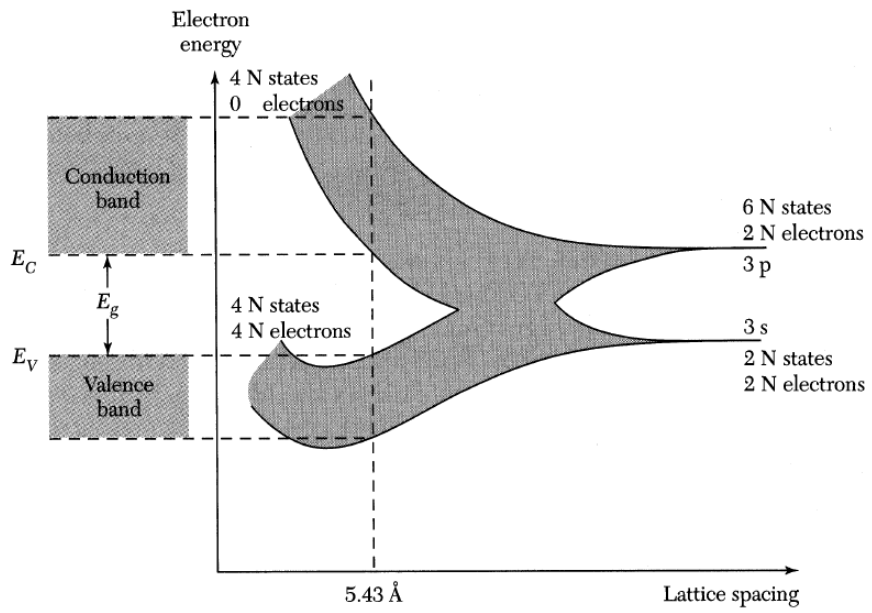

Fig. 15 Formation of energy bands as a diamond lattice crystal is formed by bringing isolated silicon atoms together.

(Ex. 1107 [Sze Textbook] at 30.) E_g is the energy required to break a bond in the semiconductor to free an electron to the conduction band and leave a hole in the valence band. (*Id.*) Higher bandgap energy E_g implies higher resistivity and smaller bandgap implies lower resistivity. Thus, the bandgap energy is a key factor in determining a material's electrical conductivity—that is, a material's electrical conductivity is inversely related to its bandgap energy.

138. Insulators usually have wider bandgap energies (for example, 4 eV to 9 eV), semiconductors have narrower bandgap energy (for example, 0.25 to 4 eV), and conductors (metals) usually have no bandgap energies.

139. The band alignment between two materials in a metal-semiconductor junction, such as the band alignment between the metal's Fermi level and the interface

layer's conduction band edge, is dependent on those two materials' work function and electron affinity. If two materials' relevant energies (such as a metal's Fermi energy and a semiconductor's conduction band energy) are not aligned, this results in a barrier to the flow of electrons (or the flow of holes) between those materials.

140. Compounds in the "oxide of titanium" genus have different bandgap energies that affect the characteristics of the compound and the applications for which the compound may be employed. The bandgap energy determines the resistivity of a material, particularly of an undoped material, with lower bandgap materials being generally more conductive than higher-bandgap materials.

141. For example, TiO does not have a bandgap energy because it behaves like a metal, (Ex. 1063 [1966-Denker] at 149); the bandgap energy of TiO_2 is about 3.0 to 3.4 eV, (Ex. 1074 [1980-Szydlo] at 3310; Ex. 1058 [2005-Tian] at 1788); the bandgap energy of Ti_2O_3 is 0.1 eV, (Ex. 1059 [2017-Wang] at 1); the band gap energy of Ti_3O_5 is small, since Ti_3O_5 is a black (*i.e.*, absorbing) material, (Ex. 1076 [1982-Hong] at 211); and the band gap energy of $TiSiO_4$ ranges from 1.75 eV (708 nm) to 2.68 eV (462 nm). (Ex. 1081 [2017-Liu].) Some of the references, such as 2017-Wang and 2017-Liu, were not published until more than a decade after the alleged priority date of the '880 Patent: however, the articles are nonetheless relevant because they report the physical properties of those materials.

142. In light of the broad range of variation in the bandgap energy within the genus of oxide of titanium, the disclosure of "TiO_2" with "a barrier less than 1 eV" alone does not convey to a POSITA that the inventors had possession of the entire genus of oxide of titanium.

e) Dielectric Constants

143. The dielectric constant of a material is the ratio of the electrical permittivity of the material to the permittivity of vacuum. Permittivity of a material is its ability to store electrical energy in an electrical field. The dielectric constant of an insulator expresses the polarizability of the material and the ability of the insulator to store electric energy in an electrical field. The dielectric constants are used to describe characteristics of the insulators and thus determine the applications for which the insulators can be employed.

144. It was well-known to a POSITA that "oxides of titanium" have different dielectric constants which affect the characteristics of the compound and determine the applications for which the compound can be employed.

145. Titanium oxides have high dielectric constants. 2005-Brassard report that TiO_2 has "the highest dielectric constant of the metal oxide group, with *k* values in

excess of 80 are routinely obtained."[7] (Ex. 1035 [2005-Brassard] at 154912-1; *see also* Ex. 1078 [1978-Takeuchi] at 88 (noting that the dielectric constant of TiO_2 is 100.).) Addition of another element, such as silicon, alters the dielectric constant of the compound. For example, the dielectric constant of $TiSiO_4$ is 16.5. (Ex. 1080 [2011-Bertaud] at 044110-2, Table 1.) $Ti_{0.5}Si_{0.5}O_2$ has a dielectric constant higher than 20. (Ex. 1036 [2007-Brassard] at 034106-1.) Even minor variations in the composition can affect the dielectric constant significantly. $Ti_{0.51}Si_{0.49}O_2$ has a dielectric constant that is as high as 26. (Ex. 1035 [2005-Brassard] at 054912-2.)

146. In light of the broad range of variation in dielectric constant within the genus of oxide of titanium, the disclosure of "TiO_2" with "a barrier less than 1 eV" alone does not convey to a POSITA that the inventors had possession of the entire genus of oxide of titanium.

f) Structural Characteristics

147. Structural characteristics, whether it is a crystal structure or a non-crystal structure, are fundamental properties that relate to the spatial arrangement of its atoms.

---

[7] It is known that the relative permittivity (*k* value) of high-k dielectric varies quite a bit depending on the micro-crystalline structure, material density, and its state (amorphous versus crystalline). For example, 2006-Brassard implies that the *k* value of TiO_2 is around 40. (Ex. 1102 [2006-Brassard] at 603, Fig. 5.)

I will use the term "crystal structure" here to denote the structure of the different forms of "oxides of titanium," and not necessarily limited to those of the equilibrium forms.

148. It was well-known that compounds in the "oxide of titanium" genus have different crystal structures that affect the characteristics (e.g., electrical properties) of the compound and the applications for which the compound may be employed. It is very natural that a material's properties depend on the crystal structure (even if the chemical formula, e.g., TiO_2, is the same) because it is associated with spatial arrangement of atoms.

149. For example, it was well-known that TiO_2 crystallizes in three different structures: the rutile structure, anatase structure, and brookite structure. (Ex. 1069 [1995-Mo].) I note that atoms in a crystal structure have specific positional relationships with each other. In each of the three crystal structures (rutile, anatase, and brookite), the constituent atoms have distinct positional relationships with each other. 1995-Mo found that TiO_2 of the rutile structure has a smaller bandgap energy than the two other crystal structures (relating to the valence band alignment). (Ex. 1069 [1995-Mo] at 51.) Additionally, 1995-Mo found that the TiO_2 brookite structure has a relatively smaller bulk modulus (relating to elastic properties and thus adhesion of the interface-layer). (Ex. 1069 [1995-Mo] at Abstract.) A material's bulk modulus can indirectly influence its electrical behavior by affecting the arrangement and spacing of its atoms, which in turn can affect the movement of charge carriers within the material.

150. Other binary oxides of titanium were also known to have multiple different crystal structures, which can influence the electrical properties. For example, TiO (titanium monoxide) was known to have multiple different structures, such as cubic, tetragonal, orthorhombic, hexagonal, and monoclinic structures. (Ex. 1050 [2013-Kostenko]; Ex. 1051 [2017-Valeeva]; Ex. 1086 [1997-Bartkowski].) Ti_2O_3 has the corundum crystal structure, which is a hexagonal crystal structure. (Ex. 1076 [1982-Hong]; Ex. 1046 [1974-Mott].) Ti_4O_7 has a triclinic crystal structure. (Ex. 1076 [1982-Hong].) Ti_3O_5 (trititanium pentoxide) is reported to be of the "anosovite" structure and the "monoclinic" structure. (Ex. 1047 [1959-Åsbrink]; Ex. 1084 [2021-Yang].)

151. On the other hand, some ternary titanate compounds were also known to have different crystal structures or a non-crystal structure (e.g., a glass-like structure), and the structural characteristics can influence the electrical properties. For example, $TiSiO_4$ (titanium silicate) has a glass-like structure. (Ex. 1035 [2005-Brassard].) Similarly, $TiSi_xO_y$ is essentially glass. (Ex. 1052 [1976-Gerlich].) Because a glass is an amorphous material, it does not have a crystal structure. Thus, neither $TiSiO_4$ nor $TiSi_xO_y$ has a crystal structure.

152. In light of the broad range of variation in the structural properties within the genus of oxide of titanium, the disclosure of "TiO_2" with "a barrier less than 1 eV"

alone does not convey to a POSITA that the inventors had possession of the entire genus of oxide of titanium.

g) Melting Point

153. The melting points of the following exemplary "oxide of titanium" are different: the melting point of TiO is 1,700 °C (Ex. 1117 [TiO Melting Point]); the melting point of TiO_2 is 1,855 °C (Ex. 1118 [TiO_2 Melting Point]); the melting point of Ti_2O_3 is 2,130 °C (Ex. 1119 [Ti_2O_3 Melting Point]); and the melting point of Ti_3O_5 is 1,700 °C (Ex. 1075 [Phelly Ti_3O_5].) I note that the melting point is indicative of high-temperature structural stability which is of interest for reliability considerations.

154. The melting point of an "oxide of titanium" used in an interface layer of a metal-semiconductor junction is important when considering its usefulness in semiconductor manufacturing. For example, Physical Vapor Deposition (PVD) is a common process in semiconductor manufacturing that is used to deposit an "oxide of titanium" on a semiconductor substrate. The PVD process involves evaporating the "oxide of titanium" so that it can be deposited on the semiconductor substrate. The melting point of an "oxide of titanium" is indicative of the vapor pressure of the "oxide of titanium" and thus relevant to evaporation. That is, the melting point of an "oxide of titanium" is an indicator of the temperature required for the PVD process. In general, the PVD process is more difficult when the "oxide of titanium" being deposited requires a higher source temperature.

155. In light of the broad range of variation in the melting point within the genus of oxide of titanium, the disclosure of "TiO_2" with "a barrier less than 1 eV" alone does not convey to a POSITA that the inventors had possession of the entire genus of oxide of titanium.

h) Optical Transparency

156. Compounds in the "oxide of titanium" genus have different optical properties that affect the properties of the compound and determine the manner in which the compound may be employed during manufacturing a layer that comprises an oxide of titanium. I note that the optical transparency gives an indication of the bandgap energy, with opaque materials having a lower bandgap energy, and transparent materials having a higher bandgap energy.

157. The optical reflectivity, absorbency, opacity, and transparency of an oxide of titanium may have a significant influence in semiconductor manufacturing. This is because photolithographic processes are influenced by the optical properties of the materials on the wafer surface so that the optical properties need to be taken into account when performing photolithographic exposure, baking, and development processes.

158. For example, TiO is optically reflective (similar to a metal), (Ex. 1066 [Coat TiO]); TiO_2 is optically transparent in the visible wavelength range (corresponding to high optical transparency), (Ex. 1079 [1972-Fitzgibbons]); Ti_2O_3 is

optically absorbing and opaque ("dark violet"), (Ex. 1076 [1982-Hong] at 214)); Ti_3O_5 is optically absorbing and has the color black, *see id.*; and $TiSiO_4$ is at least partially transparent, (Ex. 1081 [2017-Liu]).

159. In light of the broad range of variation in the melting point within the genus of oxide of titanium, the disclosure of "TiO_2" with "a barrier less than 1 eV" alone does not convey to a POSITA that the inventors had possession of the entire genus of oxide of titanium.

i) Examples of The High Level of Variation In Properties Between Oxides of Titanium

160. As discussed above in Sections XI.A.4.a) through XI.A.4.h), the various oxides of titanium have different properties. Relying on the data presented in these abovementioned Sections, exemplary different properties of TiO, TiO_2, Ti_2O_3, Ti_3O_5 and $TiSi_xO_y$ (each being a different oxide of titanium) are summarized in the table below: [8]

[8] SemiC refers to semiconductor; RoomT refers to room temperature; SC-to-M refers to transition from semiconductor properties to metal properties. The blank entries in the table indicate that data is not available.

Properties	TiO	TiO2	Ti2O3	Ti3O5	TiSiO4
Electrical conductivity	Conductor	SemiC	SemiC at RoomT exhibiting SemiC-to-M at higher temp.	SemiC at RoomT exhibiting SemiC-to-M at higher temp.	Insulator
Electron affinity	None	4 eV	Probably unknown	Probably unknown, but relatively small	Probably unknown
Bandgap energy	None (metallic)	3.0-3.4 eV	0.1 eV	Small bandgap with semiconductor -to-metal transition at 440 K	1.75-2.68 eV
Dielectric constant		80			16.5
Structural properties	Monoclinic and cubic	Rutile, anatase and brookite	Corundum	Anosovite and monoclinic	Glass-like (no structure)
Melting point	1,700 °C	1,855 °C	2,130 °C	1,700 °C	
Optical transparency	Reflective (similar to a metal)	Transparent (high)	Optically absorbing and opaque (“dark violet”)	Optically absorbing and opaque (black colored)	Partially transparent

5. A POSITA would not know whether some species in the genus of "oxide of titanium" would be suitable as an interface layer because their properties were not well understood.

161. A person of ordinary skill would not find sufficient guidance to implement the full scope of the alleged invention claimed in the '880 Patent with respect to the genus of "an oxide of titanium" because properties of some of the species of "oxide of titanium" were not entirely well understood.

162. Though the compound TiO_2 (titanium dioxide) is widely used in the semiconductor industry, the properties of TiO_2 were not entirely well-understood even in 2018. Kashiwaya et al. reported that "[r]egardless of orientations and polymorph, a ***huge variation of the Fermi level and work function*** was achieved by varying the surface condition" after studying the position of the Fermi level relative to the valence band edge and the vacuum level for TiO_2 having rutile or anatase crystal structures and various crystal orientations. (Ex. 1085 [2018-Kashiwaya] at 73.) While some of the data shown is consistent with an electron affinity of 4.0 eV (Ex. 1087 [2017-Marques] at 506), the "huge variation" found shows that the TiO_2 material suffered from quality variations that strongly influenced its properties. (Ex. 1085 [2018-Kashiwaya] at 73.) The results also show that even in 2018, the properties of TiO_2 were still being studied and identified. (Ex. 1085 [2018-Kashiwaya].)

163. In addition, the properties of non-stoichiometric species were neither known nor understood even in 2011 or 2014, as demonstrated by two noteworthy research articles from that time frame. These articles, Stella (published in 2011) and Lee (published in 2014), employ an oxide of titanium, specifically a non-stoichiometric oxide such as TiO_x. (Ex. 1054 [2011-Stella]; Ex. 1055 [2014-Lee].) TiO_x typically derives itself from TiO_2 yet is oxygen deficient so that the chemical formula becomes TiO_x with $x < 2$. Review of the 2011-Stella and 2014-Lee research articles reveals that the titanium oxide employed by the investigators is far from an established material. (Ex. 1054 [2011-Stella]; Ex. 1055 [2014-Lee].) Indeed, the carrier transport properties of TiO_x were neither known in the 2011-to-2014 time frame nor understood.

164. Specifically, 2011-Stella investigated charge transport properties of TiO_x with respect to changes in current when the material was subjected to various voltages as well as photo excitation. (Ex. 1054 [2011-Stella].) 2011-Stella found that current transients have a long time constant (of several 100 seconds) which is highly surprising given that electronic devices typically react rapidly to any change in stimulus (e.g., voltage or light). (Ex. 1054 [2011-Stella] at Abstract.) 2011-Stella attributed the long time constants to internal chemical transport ("chemicurrent") of atoms such as hydrogen atoms. (Ex. 1054 [2011-Stella].) 2011-Stella concluded: "Thus, it seems to be surprising that such a low bias voltage drastically influences the transport in the

[conduction] band." (Ex. 1054 [2011-Stella] at P70.) And: "The unusual behavior of the titanium oxide based samples can be found again in the experiments monitoring device currents after the application of voltage steps." (Ex. 1054 [2011-Stella] at P73.) And finally: "A theoretical model for the transport in the lower edge of the conduction band [...] cannot be given [at] the moment." (*Id.*) These results demonstrate that even in the 2011-to-2014 time frame, non-equilibrium oxides of titanium were poorly understood.

165. Similarly, Lee et al. reported the use of a TiO_x material as a tunneling barrier for resistive RAM applications. (Ex. 1055 [2014-Lee].) Lee et al. found that transport of oxygen atoms occurs through the vacancies of the oxygen-deficient material, thereby changing the structure of the material and its electronic properties. (*Id.*) Materials whose structure changes have a "memory" in that their electronic properties depend on the respective momentary structure. These results further demonstrate that even in the 2011-to-2014 time frame, non-equilibrium oxides of titanium were highly complex and poorly understood.

B. Ancestor applications of the '880 Patent fail to enable a specific contact resistivity less than 10 Ω-μm² or less than 1 Ω-μm²

166. Claims 26 and 28 recite "a specific contact resistivity . . . less than 1 Ω-μm²." Claim 27 recites "a specific contact resistivity . . . less than 1 Ω-μm²." I have been asked to consider whether the parent applications of the '880 Patent enable the

full scope of "a specific contact resistivity . . . less than 10 Ω-μm^2." I have also been asked to consider whether the parent applications of the '880 Patent enable the full scope of "a specific contact resistivity . . . less than 1 Ω-μm^2." As the '880 Patent does, I have treated "specific contact resistance" and "specific contact resistivity" as interchangeable.

167. I have reviewed each of the patent applications and patents to which the '880 Patent claims priority. Those patent applications and patents are listed in the table below, with each row showing an application and its corresponding patent:

Application	**Citation**	**Issued Patent**	**Citation to Exhibit**
10/217,758	Ex. 1002, at 5-52	7,084,423	Ex. 1003
11/181,217	Ex. 1006, at 3-42	7,462,860	Ex. 1007
12/197,996	Ex. 1008, at 8-49	7,884,003	Ex. 1009
13/022,522	Ex. 1010, at 14-51	8,431,469	Ex. 1011
13/552,556	Ex. 1012, at 6-46	9,425,277	Ex. 1013
15/048,877	Ex. 1014, at 12-17, 35-65	9,905,691	Ex. 1015
15/251,210	Ex. 1016, at 12-48	9,812,542	Ex. 1017
15/728,002	Ex. 1018, at 51-87	10,388,748	Ex. 1019
15/887,837	Ex. 1130, at 12-32	10,090,395	Ex. 1129
16/506,022	Ex. 1124, at 62-90	11,056,569	Ex. 1125
16/847,878	Ex. 1126, at 62-91	11,018,237	Ex. 1127

168. I observe that those parent applications and issued patents have the same specifications and figures as the '880 Patent. Thus, I principally address the '880 Patent's specification and figures herein, with the understanding that the specifications and figures of the '880 Patent's parent applications are identical. But, the abstracts and claims differ somewhat. I have also considered those abstracts and claims and address them to the extent they affect my analysis.

169. I have also reviewed U.S. Patent No. 6,833,556 (Ex. 1005) and the application from which that patent issued. (Ex. 1004, at 4-44.) I understand that U.S. Patent No. 6,833,556 is incorporated by reference in each of the '880 Patent's ancestor applications.

170. Turning to "a specific contact resistivity . . . less than 10 Ω-μm^2," and "a specific contact resistivity . . . less than 1 Ω-μm^2," both of these limitations specify an upper bound, but not a lower bound. The specification shared by the '880 Patent and its ancestor applications also does not specify any lower bound for the specific contact resistance limitations. While that specification describes various specific contact resistances that can purportedly be achieved, such as "less than or equal to approximately 2500 Ω-μm^2, 1000 Ω-μm^2, 100 Ω-μm^2, 50 Ω-μm^2, 10 Ω-μm^2 or even less than or equal to 1 Ω-μm^2" and while that specification describes a "minimum" specific contact resistance, it does not quantify that "minimum" specific contact resistance or put a lower bound on it. (Ex. 1001 ['880 Patent] at 4:16-30, 14:42-65.)

Thus, plain and ordinary meaning of "a specific contact resistivity . . . less than 10 Ω-μm^2" in light of the specification has no lower bound, *i.e.*, it encompasses specific contact resistances down to and including approximately zero (such as 0.001 Ω-μm^2). Similarly, the plain and ordinary meaning of "a specific contact resistivity . . . less than 1 Ω-μm^2" in light of the specification has no lower bound, *i.e.*, it encompasses specific contact resistances down to and including approximately zero (such as 0.001 Ω-μm^2).

171. According to the '880 Patent, an interface layer of an appropriate thickness can minimize the total specific contact resistance of a metal-semiconductor junction, which is given by the sum of (1) resistance to tunneling current with (2) resistance to current due to electron emission as depicted in Fig. 8. (Ex. 1001 ['880 Patent] at Fig. 8, 14:42-65.) But, the sum of those resistances leaves a range of specific contact resistances that cannot be achieved using the techniques in the '880 Patent, as shown below:

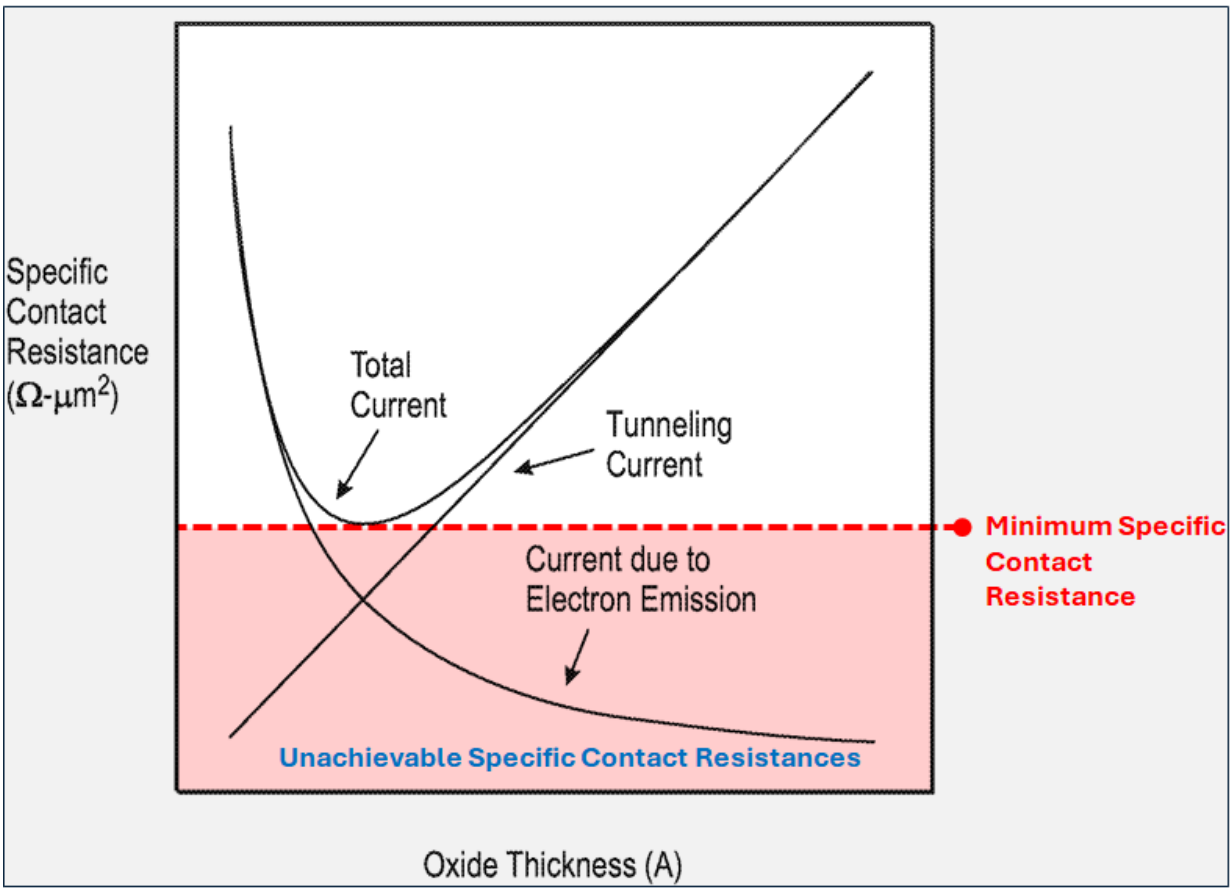

(Ex. 1001 ['880 Patent] at Fig. 8 (annotations added), 14:42-65.)

172. To summarize, limitations "a specific contact resistivity . . . less than 10 Ω-μm^2" and "a specific contact resistivity . . . less than 1 Ω-μm^2" have no lower bound on specific contact resistivity, but the specification that the '880 Patent shares with its parent applications teaches that at least some low specific contact resistances cannot be obtained by following the disclosed techniques. In other words, the claims encompass something that cannot be achieved according to the '880 Patent: specific

contact resistances (resistivities) all the way down to and including approximately zero.

173. Because the limitations "a specific contact resistivity . . . less than 10 Ω-μm^2" and "a specific contact resistivity . . . less than 1 Ω-μm^2" encompass specific contact resistances (resistivities) that are impossible to achieve using the techniques disclosed in the '880 Patent and its parent applications—namely, specific contact resistances (resistivities) down to and including approximately zero—the '880 Patent and its parent applications do not enable the full scope of "a specific contact resistivity . . . less than 10 Ω-μm^2" and "a specific contact resistivity . . . less than 1 Ω-μm^2". And because the '880 Patent's parent applications do not enable the full scope of that limitation, any claims reciting or including that limitation—which includes Claims 26-28—cannot obtain a priority date earlier than the filing date of the '880 Patent: May 12, 2020.

174. I understand that Patent Owner may argue that a POSITA would have understood the claims to include an "inherent lower limit." But that's not how the claims are written and I have been informed and understand that the claims must be read in the manner they were written.

175. Claims 26 and 28 encompass specific contact resistances below 10 Ω-μm^2 and approaching 0 Ω-μm^2 and Claim 27 encompasses contact resistances below 1 Ω-μm^2 and approaching 0 Ω-μm^2. (*See above* at ¶¶ 166-174.) I understand that Acorn's

expert, Dr. Kuhn, has stated in context of related patents that these claimed values include 0.5 Ω-μm^2, 0.1 Ω-μm^2, 0.01 Ω-μm^2, 0.001 Ω-μm^2, and even values that are too low to measure. (*See* Ex. 1048 [Dr. Kuhn's Deposition Transcript from 7-6-2021] at 124:10-24) ("Q. The last sentence of the first paragraph on page 14 states, 'And a POSITA would understand that the resistivity values achievable with the invention are quite low, perhaps even negligible or too low to measure.' Did I read that correctly? A. Yes, that appears to be correct. It's the last paragraph -- sorry, it's the last sentence in the first paragraph on the page which is kind of half a paragraph. It's like the fourth sentence on the page. That one? Q. Yep. A. Got it. Yes, you read that correctly. Q. Do you agree with that statement? A. Yes, I agree with that.").

176. However, the disclosure of the Priority Applications does not enable one to achieve the full scope of these claimed ranges when using an interface layer comprising an oxide of titanium. Specifically, the techniques described in the Priority Applications are plainly insufficient to enable a person of ordinary skill in the art to even know where to start in how to achieve the claimed ranges approaching 0 Ω-μm^2, including values that are too low to measure. (*See above* at ¶¶ 166-174.)

177. For example, the Priority Applications do not specify or even hint at what materials, thicknesses, or other means a POSITA should use to achieve SCRs of 0.5 Ω-μm^2, 0.1 Ω-μm^2, 0.01 Ω-μm^2, or 0.001 Ω-μm^2. And I agree with Dr. Kuhn that nothing in the Priority Applications would even lead a POSITA to believe that one

could achieve those claimed SCR values using the disclosure of the Priority Applications regardless of the amount of experimentation. (*See* Ex. 1048 [Dr. Kuhn's Deposition Transcript from 7-6-2021] at 156:7-14 ("Q. But nothing in the patent guarantees that running this experiment hundreds of times for hundreds of materials and hundreds of thicknesses would in fact achieve [the claimed SCR] below 1 ohm microns squared; correct? A. The patent does not have any guarantees in it that I'm aware of."); 134:19-135:13 ("Q: … The '423 patent doesn't teach one of skill in the art what materials or thicknesses to choose in order to achieve a specific contact resistivity that is less than 1 ohm microns squared; correct? A. The '423 patent does not teach specific materials nor specific thicknesses to achieve a contact resistance of less than 1 ohm microns squared. It teaches a general methodology represented by Figure 8 to find the minimum contact resistance for a general materials processing thickness condition. Q. But the general methodology taught in the '423 patent does not provide any guarantee to a person of ordinary skill in the art that if he or she follows that methodology, he or she will achieve a specific contact resistivity of less than 1 ohm microns squared; correct? A. I'm not sure any patent guarantees anything. The word "guarantee" is not used in the patent. I may be misunderstanding the point of the question, but I'm not sure guarantee comes into this.").) That, in my view, is the fundamental defect in the challenged claims and the Priority Applications: the challenged claims cover SCR ranges of 0.5 Ω-μm^2, 0.1 Ω-μm^2, 0.01 Ω-μm^2, or 0.001

Ω-μm^2 or even lower (too low to measure), but the Priority Applications do not teach how to achieve such low values, whether by teaching materials, thicknesses, or other means for achieving those values.

178. Approximately two years after the alleged 2002 priority date of the '880 Patent, the named inventors of the '880 Patent published a paper including experimental results of using an interface layer in a MIS junction. (*See* Ex. 1120 [2004 Connelly Paper].) In the 2004 Connelly Paper, the researchers considered a SiN_x interface layer deposited between aluminum and silicon to form an MIS junction. (*See* Ex. 1120 [2004 Connelly Paper] at 98 (Figure 1 shows the "[t]ransmission electron micrograph of an Al/SiN_x/Si junction, showing the ultrathin interfacial layer."), 99 ("Fig. 3 shows the results of applying an insulator, in this case thermal SiN_x, to the interface between Al and Si.").) The 2004 Connelly Paper does not consider using other materials, such as metal oxides, in the interface layer. The 2004 Connelly Paper also does not consider using multiple materials, such as what the '880 Patent refers to as a passivation layer and separation layer, in the interface layer.

179. As shown in Figure 3 below, the 2004 Connelly Paper reports the Al/SiN_x/Si junction achieving specific contact resistivity values only as low as 0.3 kΩ-μm^2 (300 Ω-μm^2). (*See* Ex. 1120 [2004 Connelly Paper] at 99.) In that way, approximately two years after the alleged priority date of the '880 Patent, the Acorn named inventors published experimental results that did not achieve the full scope of

the claimed range of specific contact resistances based on any interface layer (let alone an interface layer comprising an oxide of titanium, which several claims require).

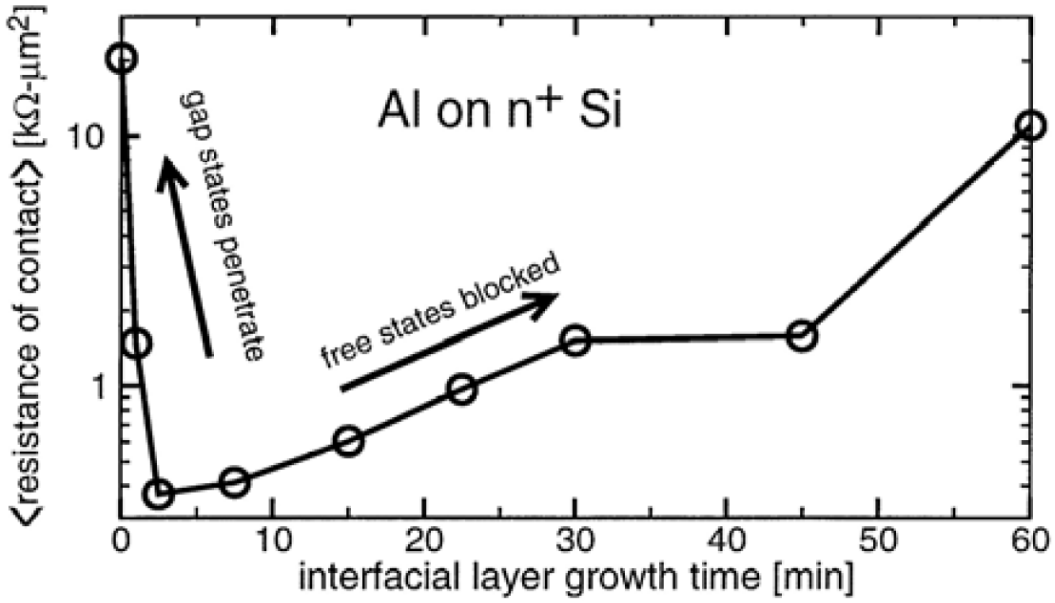

Fig. 3. Measured Al contacts on n^+ Si show a clear minimum. As interfacial treatment is increased, resistance drops sharply as gap states are blocked and the Fermi level is liberated. A further increase in the interfacial thickness, however, results in increased resistance due to the blocking of free carriers. Tunneling in Si due to high substrate doping reduces the contrast of thermionic barrier shifts. The wet-etched contacts are approximately 3 μm × 21 μm.

180. Additionally, Shine, an article published in 2013 (more than 10 years after the alleged priority dates of the '880 Patent), describes the use of an Al/ZnO/n-Ge MIS junction, where ZnO comprises the interface layer being used. (*See* Ex. 1121 [2013-Shine] at 70, 72.) 2013-Shine describes using ZnO instead of TiO_2 as the interface layer because modeled data suggested that "ZnO is a superior alternative" to TiO_2. (Ex. 1121 [2013-Shine] at 70.) And more than 10 years after the alleged priority date of the '880

Patent, 2013-Shine reports that the use of ZnO in an Al/ZnO/n-Ge MIS junction "show that the target [specific contact resistivity] of 10^{-9} Ω-cm^2 [(0.1 Ω-μm^2)] is within reach." (Ex. 1121 [2013-Shine] at 72.) Additionally, 2013-Shine's work relies on other advances in the field that occurred between 2002 and 2013, such as advances in attainable doping levels. (*See* Ex. 1121 [2013-Shine] at 71 (referring to "attainable doping levels").) And even after considering the use of interface layers in MIS junctions, 2013-Shine states that "it is worth noting that to reach the ultimate lower limits, there is no substitute for higher doping." (Ex. 1121 [2013-Shine] at 72.)

181. I understand that the Board rejected Acorn's argument and held that "[e]nablement under section 112, which is required for priority under section 120, requires enablement of the ***full breadth of a claim***." (Ex.1133 [Grupp '483 IPR] at 33-34, 38.) The Board concluded that the ancestor applications of the '691 Patent do not enable the breadth of the recited range of "less than 1 Ω-μm^2." (Ex.1133 [Grupp '483 IPR] at 38-39.)

C. Overview of Prior Art

1. Grupp '483

a) Grupp '483 is prior art to the '880 Patent

182. To disclose a genus, such as the genus of "oxides of titanium," the inventors may give a representative number of species falling within the scope of the "oxide of titanium" genus, or structural features common to the members of the genus

so that a person of ordinary skill in the art can visualize or recognize the members of the genus. The ’880 patent does not provide such disclosure, but instead provides a parenthetical remark giving a lone example of TiO_2. A person of ordinary skill would not consider the parenthetical disclosure of the lone example, TiO_2, as disclosure of a genus by means of a representative number of examples, or a disclosure of structural features common to the members of the genus. Because the genus “oxide of titanium” was not disclosed and because the claimed genus is so large, diverse, and unpredictable, with the electrical conductivity spanning the greatest extent possible (ranging from conductor to semiconductor to non-conductor), the written description requirement for the genus “oxide of titanium” is not met by the Priority Applications predating the US Application No. 15/929,592 that was issued as the ’880 Patent.

183. I further understand that describing a single species (such as TiO_2) is not sufficient to support claims to a genus when the evidence indicates that a person of ordinary skill could not predict the operability in the invention of any species other than the one disclosed. Given that the electrical conductivity of the oxides of titanium span the greatest extent possible (ranging from conductor to semiconductor to non-conductor) along with the great diversity of other properties and the fact that properties of some oxides of titanium are yet to be determined, a person of ordinary skill could not predict the operability in the invention of any species other than the one disclosed

(that is, TiO_2). For this additional reason, the written description requirement is not met.

184. Accordingly, the Priority Date of the claims of '880 patent that require an "oxide of titanium" should be the filing date of the '877 Application, which is February 19, 2016. Grupp' 483 predates the 2016 date by more than a decade and for this reason is prior art to the '880 Patent. Next, I will discuss how Grupp '483 anticipates the Claims 1-22 and 26-28 of the '880 Patent.

b) Overview of Grupp '483

185. Grupp '483 is a patent that issued from a continuation-in-part application that claims priority to U.S. Patent No. 7,084,423. (Ex. 1003 [U.S. Patent No. 7,084,423]; Ex. 1021 [Grupp '483] at Cover, 1:8-19.) U.S. Patent No. 7,084,423 is also the patent that issued from the first patent application in the priority chain of the '880 Patent. (Ex. 1001 ['880 Patent] at 1:8-27.)

186. Exhibit 1034 is a redline of the specification of Grupp '483 against the specification of U.S. Patent No. 7,084,423. (Ex. 1034 [Grupp '483 Redline].) As that redline shows, Grupp '483 includes substantially all of the disclosure of U.S. Patent No. 7,084,423. But, Grupp '483 discloses at least two new features not disclosed in U.S. Patent No. 7,084,423.

187. *First,* Grupp '483 describes carbon by itself as a semiconductor, as well as carbon in a germanium-carbon alloy. (Ex. 1021 [Grupp '483] at 3:18-28; Ex. 1034

[Grupp ’483 Redline] at 3-5.) Further, Grupp ’483 describes various crystal structures for carbon: “If primarily C, the crystal structure may be either a diamond lattice, or another bonding scheme such as a fulleride (an example of which are carbon nanotubes) or polymer.” (Ex. 1021 [Grupp ’483] at 3:25-28; Ex. 1034 [Grupp ’483 Redline] at 4; *see also* Ex. 1021 [Grupp ’483] at 5:49-56; Ex. 1034 [Grupp ’483 Redline] at 9.)

188. *Second,* Grupp ’483 discloses depositing a stack of metals on an interface layer. “A conductor may also consist of one conductor at the interface covered by a second conductor. If the first conductor is sufficiently thin, then the resultant workfunction may be a combination of the two conductors.” (Ex. 1021 [Grupp ’483] at 14:50-53; Ex. 1034 [Grupp ’483 Redline] at 25.) “A submonolayer metal covered by a different metal may result in a workfunction different than either individual metal.” (Ex. 1021 [Grupp ’483] at 14:38-40; Ex. 1034 [Grupp ’483 Redline] at 25.)

2. Jammy

a) Jammy is prior art to the ’880 Patent

189. U.S. Patent No. 6,724,088 to Jammy et al., (Ex. 1101, “Jammy”) was filed on April 20, 1999. Thus Jammy qualifies as prior art to Claims 23, 24, and 25.

b) Overview of Jammy and Bronner

190. Jammy generally describes a MOSFET (metal oxide semiconductor field effect transistor) that incorporates a "quantum conductive barrier" interface layer between a conductive stud and a semiconductor substrate, as depicted below:

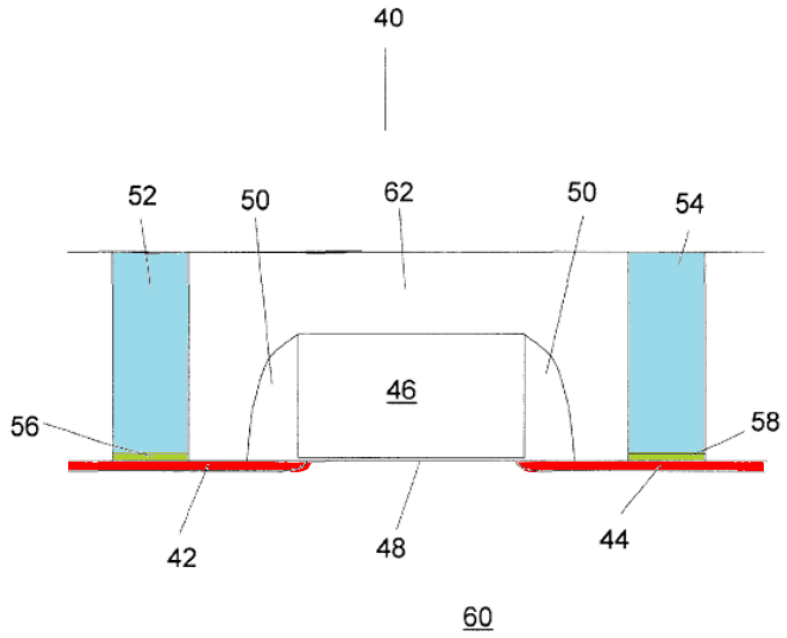

Figure 1

(Ex. 1101 [Jammy] at Fig. 1 (annotations added), 2:42-53, 3:16-22.) Jammy states that "FIG. 1 shows a schematic side view of a MOSFET 40 in a substrate 60. Shallow source/drain diffusions (doped regions) 42 and 44 are formed in substrate 60. . . . Conductive studs 52 and 54 contact diffusions 42 and 44 through quantum conductive barrier layers 56 and 58 respectively." (Ex. 1101 [Jammy] at 4:9-17.) Jammy discloses forming those source/drain diffusions by implanting n-type dopants into a silicon substrate. (Ex. 1101 [Jammy] at 4:33-38.)

191. Jammy discloses that the **quantum conductive barrier layer** can be a metal oxide layer, e.g., alumina (Al_2O_3). "Preferred quantum conductive materials are inorganic oxides or nitrides, more preferably silicon nitride compounds selected from the group consisting of silicon nitride or silicon oxynitride. These compounds may be stoichiometric or non-stoichiometric. Alternatively, other ceramic materials, such as, for example, ***alumina [Al_2O_3]***, germanium oxide, yttria-stabilized zirconia or other forms of zirconia may be used." (Ex. 1101 [Jammy] at 3:50-57 (emphasis added).)

192. Jammy also discloses that the conductive studs are metal, e.g., tungsten. "[T]he studs 52 and 54 would typically be made of tungsten or a doped polycrystalline silicon." (*Id.* at 4:31-32). Bronner, which is incorporated into Jammy by reference, discloses that conductive studs are made of metal silicides, such as tungsten silicide and titanium silicide. (Ex. 1128 [Bronner] at 4:6-11.)

193. Jammy discloses a fabrication method that includes the steps of cleaning the exposed silicon surface of the source/drain diffusions using an HF (hydrofluoric acid) solution (Ex. 1101 [Jammy] at 4:61-67) and forming a layer of Al_2O_3 on that silicon surface using chemical vapor deposition. (*Id.* at 6:1-3.)

c) Motivation to modify Bronner's FET

194. Jammy states that "[t]he invention is not limited to any specific device configuration incorporating the structures of the invention, however, the structures of the invention are preferably incorporated into a MOSFET or other transistor devices."

(Ex.1101 [Jammy] at 4:1-5.) Jammy provides "[e]xamples of various transistor structures," including U.S. Patent No. 5,792,703 (Ex.1128, "Bronner"), and states that "disclosures of which are incorporated herein by reference." (Ex.1101 [Jammy] at 4:5-8.) Thus, Jammy incorporates **Bronner** by reference.

195. Like Jammy, Bronner also pertains to Field Effect Transistors (FETs). (Ex.1128 [Bronner] at 5:7-8.) Bronner discloses a method of making self-aligned electrical contacts to the device region (or diffusion regions) in a substrate. Fig. 4 of Bronner is a cross-sectional view of "a silicon substrate 50" having several FETs. (Ex.1128 [Bronner] 3:1-3, 7-8).

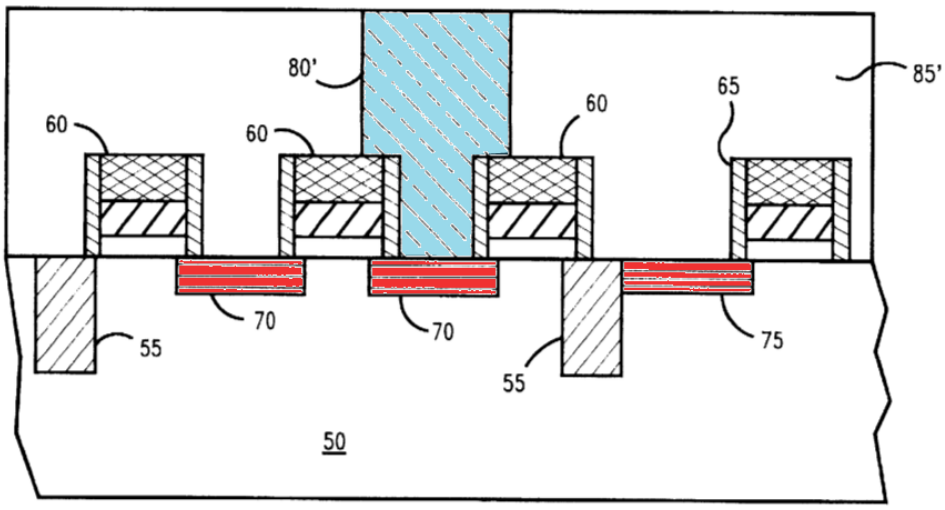

FIG. 4

(Ex.1128 [Bronner] Fig. 4 (annotated).) Like Jammy, Bronner discloses the components of an FET, i.e., a gate 60, diffusion regions 70 and 75 in the substrate, and a contact opening 80' that is filled with conductor. (Ex.1128, 3:6-12, 4:6-7.) In

view of Jammy's suggestion that its invention can be incorporated in the transistor disclosed in Bronner, a POSITA would place Jammy's quantum conductive barrier layer 90 between the filled contact opening 80' and the diffusion region 70 of the modified transistor in Bronner, as shown in the annotated Figure 4 below:

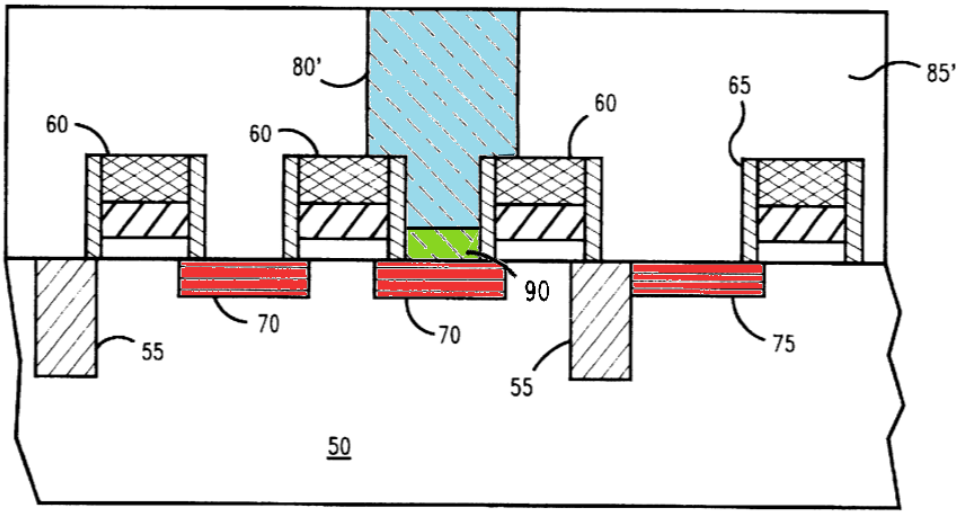

FIG. 4

(Ex.1128 [Bronner] at Fig. 4 (annotated and modified).)

196. A POSITA would have been motivated to improve the FET disclosed in Bronner in view of the disclosures of Jammy about the benefits of the quantum conductive barrier layer. Jammy identifies the benefits that the quantum conductive barrier layer provides and explicitly suggests that Jammy's invention can be utilized to improve FETs disclosed in Bronner. Modification of the FETs disclosed in Bronner to incorporate Jammy's quantum conductive barrier would have been a combination of prior art elements according to known methods to yield a predictable result. Such a

modification would involve depositing a quantum conductive barrier layer (either a silicon oxynitride layer or an alumina layer) according to the methods described in Jammy. For example, Jammy discloses depositing alumina layer using CVD. As I describe below, deposition of alumina on a semiconductor substrate using CVD was well known and prevalent years before the priority date of Claims 23-25 of the ’880 Patent. Similarly, a POSITA would have been familiar with techniques involved in fabrication of Field Effect Transistors because such transistors have been widely fabricated since the 1990s. Thus, a POSITA would have been familiar with techniques disclosed in Jammy and in Bronner, and would have a reasonable expectation of success when modifying the FETs disclosed in Bronner according to the teachings of Jammy.

D. Grupp ’483 anticipates Claims 1-22

197. I have reviewed **Section XIII.A** of the Petition that compares Claims 1-22 to the specification of Grupp ’483, and concur that Grupp ’483 anticipates Claims 1-22.

198. With respect Claims 4, 6, 8-10, 15, 16, 19, 20, and 22, I want to add that a POSITA would be able to discern from Fig. 4 of Grupp ’483 that it depicts a junction of an n-type semiconductor and a metal based on the band diagram near the junction. Fig. 4 from the Sze Textbook depicts the energy band diagrams of metal *n*-type and *p*-type semiconductor junctions under different biasing conditions:

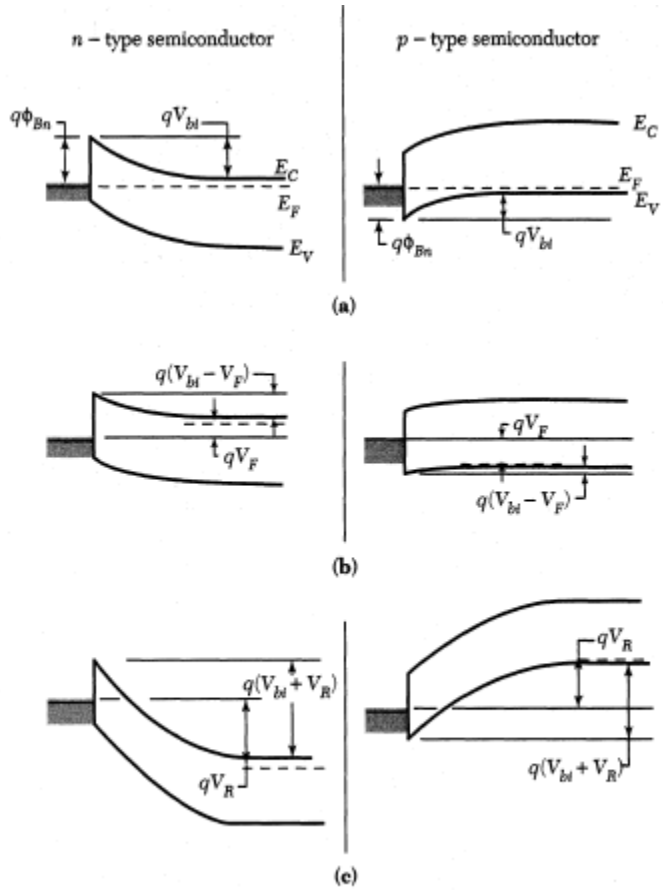

Fig. 4 Energy band diagrams of metal *n*-type and *p*-type semiconductors under different biasing conditions: (*a*) thermal equilibrium; (*b*) forward bias; and (*c*) reverse bias.

(Ex. 1107 [Sze Textbook] at 228.)

199. Fig. 4 of the Sze Textbook depicts a barrier height is $q\varphi_{Bn}$, conduction band energy E_C, Fermi level E_F and Valance band energy E_V. The figure depicts a junction between a metal and *n*-type semiconductor on the left and a junction between a metal and *p*-type semiconductor on the right. The band bending (also referred to as diffusion potential or built-in voltage) is due to the difference between the work function of metal φ_m and the work function of the semiconductor φ_s. (Ex. 1023 [Rhoderick] at 1.) The concept of work function is described in **Section XI.A.4.b)**

above. In nearly all cases $\varphi_m > \varphi_s$ for *n*-type semiconductors, the bands are bent upwards towards the junction. But $\varphi_m < \varphi_s$ for *p*-type semiconductors, the bands are bent downwards towards the junction. (Ex. 1023 [Rhoderick] at 1-2.)

E. Grupp '483 anticipates Claims 26-28

200. I have reviewed **Section XIII.B** of the Petition that compares Claims 26-28 to the specification of Grupp '483, and concur that Grupp '483 anticipates Claims 26-28.

F. Jammy renders obvious Claims 23-25

1. Claim 23

a) An electrical junction, comprising:

201. I have reviewed **Section XIII.C.1** of the Petition that compares Claim 23 to the disclosure of Jammy and Bronner (incorporated by reference) and concur that Jammy discloses the preamble of Claim 23 and Limitations (b) through (d) of Claim 23.

202. I have reviewed **Section XIII.C.1** of the Petition that compares Limitation (e) of Claim 23 to the specification of Jammy, and concur that Jammy renders obvious Limitation (e). I offer additional opinions about the knowledge of a person of ordinary skill in the art regarding use of ***silicon oxynitride*** and the deposition of ***alumina (Al_2O_3)*** using chemical vapor deposition at the time of the invention of the '880 Patent.

b) the interface layer comprising a passivation layer adjacent to the silicon-based semiconductor that is an oxide of silicon, the passivation layer having a thickness of less than about 1 nm.

203. Jammy renders this element obvious. Jammy discloses the interface layer comprising an oxide of the semiconductor. Jammy discloses numerous compounds that can be used for forming the quantum conductive barrier layer. Of particular relevance are quantum conductive barrier layers formed with silicon oxynitride and alumina, as discussed below:

(1) *"oxide of silicon": silicon oxynitride*

204. Jammy discloses the interface layer comprising an oxide of silicon. Jammy discloses that "[p]referred quantum conductive barrier materials are . . . ***silicon oxynitride***." (Ex. 1101 [Jammy] at 3:1-2, 3:51-53.) A POSITA would understand that silicon oxynitride (SiON) is an "oxide of the semiconductor." In addition, Jammy discloses another layer that is also an "oxide of silicon." Jammy mentions that when "an oxynitride quantum conductive layer is desired, the . . . nitrogen reaction process may be conducted with a substrate have a ***pre-existing very thin oxide layer***." (*Id.* at 5:41-43.) Because Jammy discloses using a silicon substrate, (*id.* at 4:33-36), the oxide layer mentioned in Jammy will be an "oxide of silicon," and in particular, an oxide of silicon. Jammy mentions that "[if] desired, the exposed diffusion surface may be precleaned by a chemical etch . . . to remove some or all of any pre-existing oxide

surface layer." (*Id.* at 5:32-37.) The pre-existing oxide layer in Jammy will also constitute an interface layer that comprises an "oxide of silicon." Should the very thin oxide layer intermix with the nitride layer, an oxynitride is formed which constitutes an interface layer that comprises a ternary "oxide of silicon."

(2) *"oxide of silicon": oxide of silicon formed when depositing alumina (Al_2O_3) layer*

205. Jammy also discloses that besides silicon nitride and silicon oxynitride, "other ceramic materials, such as, for example, ***alumina [Al_2O_3]*** . . . ***may be used***" as quantum conductive materials. (Ex. 1101 [Jammy] at 3:55-57). Jammy teaches "forming a quantum conductive layer on the exposed surface," (*id.* at 4:64-65) of a semiconductor substrate, which can be a silicon substrate. (*Id.* at 4:33-36.) Jammy discloses that the fabrication method includes the steps of cleaning the exposed silicon surface of the source/drain diffusions using an HF (hydrofluoric acid) solution (Ex. 1101 [Jammy] at 4:61-67.) Jammy also mentions that "the quantum conductive layer can be formed by chemical vapor deposition [CVD]." (*Id.* at 6:1-3.)

206. A POSITA would have been aware of the process employed to form a layer of ***alumina*** on the exposed surface of silicon substrate using CVD before the alleged priority date of the claims of the '880 Patent. Alumina has been used in semiconductor fabrication at least since the 1970s and numerous contemporary technical articles in analogous art that disclose forming an alumina layer on silicon

surface using CVD. (*See, e.g.,* Ex. 1103 [2002-Stesmans]; Ex. 1111 [2002-Tsai]; Ex. 1110 [2002-Groner].) In view of the disclosure of these articles, a POSITA would know that the deposition of alumina using CVD on a silicon substrate results in the formation of a thin layer of silicon oxide directly on the substrate below the alumina layer.

207. One such reference is 2002-Stesmans, published in early 2002, that analyzes ultrathin layers of ***alumina*** on silicon substrate. (Ex. 1103 [Stesmans] at 1957.) In particular, 2002-Stesmans analyzes the interface of silicon with "ultrathin layers of SiO_x, Al_2O_3 and ZrO_2" and discloses that "ultrathin layers of Al_2O_3 (~0.5-3 nm) . . . as well as ultrathin SiO_x layer, were deposited at 300° C in an atomic-layer ***chemical-vapor-deposition*** (ALCVD) reactor using $Al(CH_3)_3$ and H_2O . . . as precursors . . . at a pressure of ~1 Torr." (*Id.* at 1957.) 2002-Stesmans notes that a thin interfacial layer of SiO_x is formed between the silicon and Al_2O_3 (alumina) interface. (*Id.* at 1959.) In the ALCVD process, such as the one employed by Stesmans, the oxygen precursor H_2O is introduced at the initial stages of the growth process without simultaneous introduction of the aluminum precursor $Al(CH_3)_3$. As a result, oxygen reacts with the exposed surface of silicon substrate and forms a thin interfacial layer of SiO_x. In my opinion, observations reported in 2002-Stesmans are consistent with the properties of silicon, oxygen and aluminum. A silicon atom does not bond well with an aluminum atom, but silicon and aluminum atoms bond easily with oxygen atoms.

Thus, the oxygen atoms facilitate formation of Al_2O_3 (alumina) layer on a silicon interface by forming a thin interfacial layer of SiO_x. 2002-Stesmans recommends using a layer of SiO_x with a thickness of about 0.5 nm (5 Å) or more, (*Id.* at 1959), and discloses forming alumina layers in in range of ~0.5 to 3 nm (5 Å to 30 Å). (*Id.* at 1.) Thus, 2002-Stesmans teaches a POSITA how to form an interface layer comprising an "oxide of silicon" where the oxide layer is about 5 Å thick and the alumina layer that is also about 5 Å. The thickness of the resulting stack will be around 10 Å, which is within the most preferred range of 5-15 Å disclosed by Jammy, as discussed below.

208. In light of the disclosure of 2002-Stesmans, a POSITA would also have appreciated the benefits of an silicon-oxide layer below the alumina layer. Citing 1999-Lucovsky, 2002-Stesmans further states that "it may also be added that model calculations based on constraint theory bear out the necessity for interposing an ultrathin SiO_2 layer between the Si substrate and high-κ oxides (Al_2O_3, Ta_2O_5, TiO_2) to attain device grade interfaces." (Ex. 1103 [2002-Stesmans] at 1959; *see also* Ex. 1108 [2002-Lucovsky] at 1806.)

209. 2002-Groner discusses electrical characterization of thin Al_2O_3 films grown by atomic layer deposition on silicon and various metal substrates. (Ex. 1110 [2002-Groner] at Abstract.) The article was submitted in November 2001 and accepted in April 2002. (*Id.* at 186.) Even though 2002-Groner states that "ALD represents a significant advantage over other deposition techniques such as chemical vapor

deposition (CVD) or molecular beam epitaxy," the articles notes that the "Al_2O_3 growth by ALD had been based on the CVD reaction" and states that "[t]o perform Al_2O_3 ALD, this CVD reaction is split into two half reactions." (*Id.* at 187.) 2002-Groner notes that their "observations suggest that an SiO_2 interfacial oxide layer is formed easily during Al_2O_3 ALD on HF-etched Si(1 0 0) and support our assumption of equal growth rates on both HF-etched Si(1 0 0) and the native oxide layer on Si(1 0 0)." (*Id.* at 189.)

210. 2002-Tsai also presents results on interfacial stability of high-k dielectric deposited by atomic layer chemical vapor deposition. (Ex. 1111 [2002-Tsai] at 259.) 2002-Tsai discloses that "ALCVD deposition was carried out at 300 °C and ~1 Torr with precursors of water (H_2O), tri-methyl aluminum ($Al(CH_3)_3$) and zirconium tetrachloride ($Zr\ Cl_4$)." (*Id.* at 260.) 2002-Tsai observed the growth of an interfacial layer as thin as 0.1 nm. (*Id.* at 262.) The article also noted that the growth of alumina on OH-terminated Si was faster than on H-terminated Si or N-terminated Si and that OH-terminated Si was better for subsequent high-k growth than H-terminated Si. (*Id.* at 270.)

211. A POSITA would have known well before the alleged priority date of the claims of the '880 Patent that a silicon surface oxidizes very rapidly in air at room temperature and forms a layer of silicon oxide. For example, 1975-Raider reports that exposure of a silicon surface to air at room temperature results in a layer of native oxide

(SiO_2) that is about 5 Å thick. (Ex. 1112 [1975-Raider] at 415.) Likewise, 1997-Cerofolini discloses that a very thin layer of SiO_2 (about 1 to 2.5 Å) is formed on a silicon surface by oxidation within few minutes when the surface is exposed to air at room temperature. (Ex. 1113 [1997-Cerofolini] at 143.) Finally, Fig. 2 from 1983-Mende depicts growth of silicon oxide thickness over time:

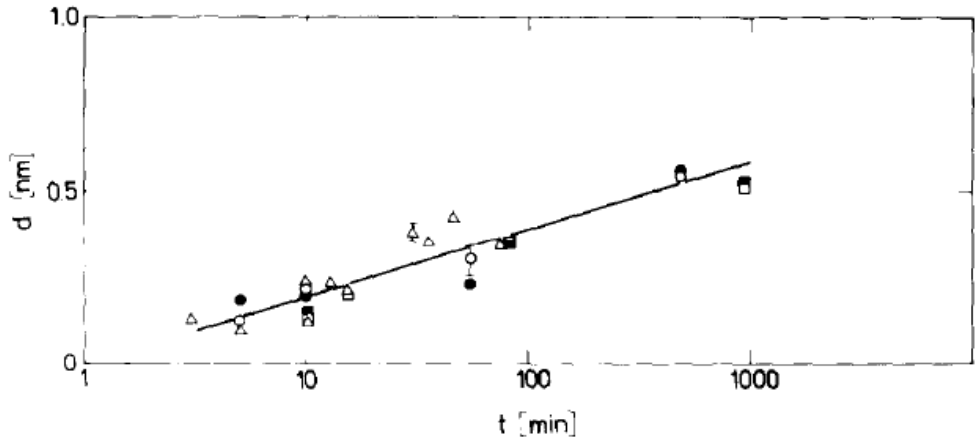

Fig. 2. Oxide thickness versus time of air exposure. ESCA: sample A, Al (●), Zr (○); sample B, Al (■), Zr (□); NAA (△).

(Ex. 1114 [1983-Mende] at 174.) The figure shows that the thickness of the oxide (SiO_2) is about 1 Å after 2 minutes and about 2.5 Å after 30 minutes. (*Id.*)

(3) ***"thickness of less than about 1 nm":***

212. Jammy renders obvious the interface layer being less than about 1 nm thick. Jammy discloses that "[t]he quantum conductive layer preferably has a thickness of about 50 Å [5 nm] or less, more preferably about 5-30 Å [0.5-3 nm], ***most preferably about 5-15 Å*** [0.5-1.5 nm]." (Ex. 1101 [Jammy] at 3:35-37.) Thus, the claimed range

of less than about 1 nm overlaps with the most preferred range of 0.5-1.5 nm disclosed in Jammy. Therefore, Jammy renders this claim element obvious.

213. Though Claim 23 of the ’880 Patent requires an interface layer comprising an oxide of the semiconductor to have thickness of less than about 1 nm, the specification of the ’880 Patent discloses that such an interface can have a broad range of thickness, and places no significance to thickness of less than about 1 nm. The “oxide of silicon” is employed in the ’880 Patent to create a layer that passivates the surface of the semiconductor by removing (or terminating dangling bonds). The patent refers to such layers as a passivation layer, and discloses the following regarding the thickness of such a layer:

> Often, the interface layer 520 includes or is made up of a passivation layer with a thickness of between approximately 0.1 nm and about 5 nm. For example, depending upon the particular implementation, the thickness may be less than about 1 nm, less than about 0.5 nm, less than about 0.2 nm, may be the thickness corresponding to a single layer or monolayer of passivation material that is bonded to the semiconductor surface, or may even be the number of atoms of passivation material required to passivate substantially all the dangling bonds associated with the semiconductor surface 540.

(Ex. 1001 [’880 Patent] at 10:27-37.)

214. The ’880 Patent mentions that the thickness of an interface layer that includes a passivation layer can be “between approximately 0.1 nm to about 5 nm.”

(*Id.* at 10:28-29.) In other words, the thickness can vary between 1 Å and about 50 Å. The '880 Patent further mentions that depending upon the implementation, the thickness can be less than about 1 nm (10 Å), less than 0.5 nm (5 Å) or less than 0.2 nm (2 Å). (*Id.* at 10:30-32.) It is my opinion that the '880 Patent does not mention that the inventors discovered any unexpected properties of the passivation layer when the thickness is less than about 1 nm or any reason why the range of less than about 1 nm is special or critical to the invention. Passivation layers of thickness less than about 1 nm are merely embodiments of the broader range that varies from approximately 0.1 nm to about 5 nm.

215. A POSITA would have been motivated to keep the thickness of the quantum conductive layer of Jammy to the thickness of 5-15 Å (or 0.5 to 1.5 nm) because Jammy describes this range as the most preferred thickness. (Ex. 1101 [Jammy] at 3:36-38.) Jammy mentions that the materials employed as quantum conductive layers would "in their bulk properties would be considered dielectrics (i.e., electrical insulators)" but "[i]n very thin layers, . . . these materials become electrically conductive." (Ex. 1101 [Jammy] at 1:23-27.) When implementing the MOSFET 40 disclosed in Jammy, a POSITA would keep the thickness of the quantum conductive layer to the preferred thickness. Otherwise, a thicker quantum conductive layer may act like an insulator and increase the contact resistance, which is undesirable in a

transistor. To conclude, a thin interfacial silicon oxide layer naturally occurs (and has been confirmed by the technical literature) when depositing Al_2O_3 on silicon.

2. Claims 24 and 25

216. I have reviewed **Sections XIII.C.2** and **XIII.C.3** of the Petition that compares Claims 24 and 25 to the disclosure of Jammy and concur that Jammy renders obvious Claims 24 and 25.

G. Alleged Secondary Considerations

217. I reserve the right to address any other alleged evidence of secondary considerations of nonobviousness that Patent Owner may present in a reply declaration.

I declare that all statements made herein of my own knowledge are true and that all statements made on information and belief are believed to be true; and further that these statements were made with the knowledge that willful false statements and the like so made are punishable by fine or imprisonment, or both, under Section 1001 of Title 18 of the United States Code.

Date: June 11, 2025

E. Fred Schubert, Ph.D.

APPENDIX A: THE CHALLENGED CLAIMS OF ’880 PATENT

What is claimed is:

1. An electrical junction, comprising an interface layer disposed between a contact metal and a source or drain of a transistor, the source or drain of the transistor comprising a silicon-based semiconductor, and the interface layer comprising a spacer layer that is an oxide of titanium and a semiconductor oxide passivation layer, wherein the semiconductor oxide passivation layer has a thickness of less than about 1 nm.

2. The electrical junction of claim **1**, wherein the contact metal comprises one of: platinum (Pt), gold (Au), tungsten (W), nickel (Ni), molybdenum (Mo), copper (Cu), cobalt (Co), or palladium (Pd).

3. The electrical junction of claim **2**, wherein the silicon-based semiconductor comprises one of: Si, SiGe, and SiC.

4. The electrical junction of claim **1**, wherein the silicon-based semiconductor comprises an n-type semiconductor and the contact metal comprises one of: platinum (Pt), gold (Au), tungsten (W), nickel (Ni), molybdenum (Mo), copper (Cu), cobalt (Co), or palladium (Pd).

5. The electrical junction of claim **1**, wherein the semiconductor oxide passivation layer is an oxide of the silicon-based semiconductor.

6. The electrical junction of claim **5**, wherein the silicon-based semiconductor is an n-type doped semiconductor.

7. The electrical junction of claim **1**, wherein the semiconductor oxide passivation layer is an oxide of silicon.

8. The electrical junction of claim **7**, wherein the silicon-based semiconductor is an n-type doped semiconductor.

9. The electrical junction of claim **1**, wherein the silicon-based semiconductor comprises an n-type silicon, the semiconductor oxide passivation layer of the interface layer is adjacent the silicon-based semiconductor and is an oxide of silicon, and the contact metal comprises titanium.

10. The electrical junction of claim **1**, wherein the silicon-based semiconductor comprises an n-type silicon, the semiconductor oxide passivation layer of the interface layer is adjacent the silicon-based semiconductor and is an oxide of silicon.

11. The electrical junction of claim **10**, wherein the spacer layer presents a potential barrier lower than 1 eV.

12. The electrical junction of claim **1**, wherein the contact metal is titanium.

13. The electrical junction of claim **1**, wherein the passivation layer is adjacent to the source or drain of the transistor.

14. The electrical junction of claim **13**, wherein the contact metal comprises tungsten.

15. The electrical junction of claim **14**, wherein the semiconductor comprises an n-type doped semiconductor.

16. The electrical junction of claim **14**, wherein the semiconductor comprises n-type silicon.

17. The electrical junction of claim **16**, wherein the semiconductor oxide passivation layer is an oxide of silicon.

18. The electrical junction of claim **13**, wherein the contact metal comprises titanium.

19. The electrical junction of claim **18**, wherein the semiconductor comprises an n-type doped semiconductor.

20. The electrical junction of claim **18**, wherein the semiconductor comprises n-type silicon.

21. The electrical junction of claim **20**, wherein the semiconductor oxide passivation layer is an oxide of silicon.

22. An electrical junction, comprising an interface layer disposed between and in contact with a contact metal and a source or drain of a transistor, the source or drain of the transistor comprising an n-type silicon-based semiconductor, the

contact metal comprising titanium, and the interface layer comprising a spacer layer that is an oxide of titanium that presents a potential barrier lower than 1 eV and a passivation layer adjacent the silicon-based semiconductor that is an oxide of silicon and has a thickness of less than about 1 nm.

23. An electrical junction, comprising an interface layer disposed between and in contact with a conductor and a source or drain of a transistor, the conductor comprising a metal silicide, the source or drain of the transistor comprising an n-type silicon-based semiconductor, and the interface layer comprising a passivation layer adjacent the silicon-based semiconductor that is an oxide of silicon, the passivation layer having a thickness of less than about 1 nm.

24. The electrical junction of claim **23**, wherein the interface layer further includes a separation layer between the contact metal and the passivation layer.

25. The electrical junction of claim **24**, wherein the interface layer has a thickness of less than 5 nm.

26. The electrical junction of claim **23**, wherein the interface layer configured to provide a specific contact resistivity of the electrical junction of less than 10 $\Omega-\mu m^2$.

27. The electrical junction of claim **26**, wherein the interface layer configured to provide a specific contact resistivity of the electrical junction of less than 1 $\Omega-\mu m^2$.

28. A field effect transistor, comprising an electrical junction that includes an interface layer disposed between and in contact with a contact metal and a source or drain of the field effect transistor, the source or drain comprising n-type silicon, the contact metal comprising titanium, the interface layer including a spacer layer that is an oxide of titanium and a passivation layer adjacent the source or drain that is an oxide of silicon, wherein the passivation layer has a thickness of less than about 1 nm and the electrical junction is operable to pass a current between the contact metal and the source or drain while presenting a specific contact resistivity of less than 10 $\Omega-\mu m^2$.

APPENDIX B: LIST OF MATERIALS CONSIDERED

Paper	Description
1	Petition for Inter Partes Review of U.S. Patent No. 10,937,880 (filed concurrently)

Exhibit	Description
1001	U.S. Patent No. 10,937,880
1002	File History of U.S. Patent No. 7,084,423
1003	U.S. Patent No. 7,084,423
1004	File History of U.S. Patent No. 6,833,556
1005	U.S. Patent No. 6,833,556
1006	File History of U.S. Patent No. 7,462,860
1007	U.S. Patent No. 7,462,860
1008	File History of U.S. Patent No. 7,884,003
1009	U.S. Patent No. 7,884,003
1010	File History of U.S. Patent No. 8,431,469
1011	U.S. Patent No. 8,431,469
1012	File History of U.S. Patent No. 9,425,277
1013	U.S. Patent No. 9,425,277
1014	File History of U.S. Patent No. 9,905,691
1015	U.S. Patent No. 9,905,691
1016	File History of U.S. Patent No. 9,812,542
1017	U.S. Patent No. 9,812,542
1018	File History of U.S. Patent No. 10,388,748
1019	U.S. Patent No. 10,388,748
1020	File History of U.S. Patent No. 10,090,880
1021	U.S. Patent No. 7,176,483 (“Grupp ’483”)
1023	E.H. Rhoderick, *Metal-Semiconductor Contacts*, 129 IEE Rev. 1 (Feb. 1982) (“Rhoderick”)
1024	C.Y. Chang et al., *Specific Contact Resistance Of Metal-Semiconductor Barriers*, 15 Solid State Elecs. 541 (1971) (“Chang”)
1025	S.M. Goodnick et al., *Effects of a Thin SiO2 Layer On The Formation Of Metal-Silicon Contacts*, 18 J. Vac. Sci. & Tech. 949 (Apr. 1981) (“Goodnick”)

Exhibit	Description
1026	M.A. Sobolewski and C.R. Helms, *Studies Of Barrier Height Mechanisms In Metal-Silicon Nitride-Silicon Schottky Barrier Diodes*, J. Vac. Sci. & Tech. B 971 (Jul./Aug. 1989) ("Sobolewski")
1027	U.S. Patent No. 4,110,488 ("Risko")
1028	M.A. Taubenblatt et al., *Interface Effects In Titanium And Hafnium Schottky Barriers On Silicon*, 44 Applied Physics Letters 895 ("Taubenblatt 1984")
1029	U.S. Patent No. 3,983,264 ("Schroen")
1030	U.S. Patent No. 4,845,050 ("Kim")
1031	Japanese Laid-Open App. No. JPH11162874A (June 18, 1999)
1032	Certified Translation of Japanese Laid-Open App. No. JPH11162874A (June 18, 1999) ("Iwaguro")
1033	D. Brassard et al., *Tuning The Electrical Resistivity Of Pulsed Laser Deposited Tisio X Thin Films From Highly Insulating To Conductive Behaviors*, 84 Applied Physics Letters 2304 (2004) ("[2004-Brassard]")
1034	Redline of Specification of U.S. Patent No. 7,176,483 Against Specification of U.S. Patent No. 7,084,423
1035	D. Brassard and M.A. El Khakani, *Pulsed-Laser Deposition Of High-K Titanium Silicate Thin Films*, 98 J. Applied Physics 054912 (2005) ("[2005-Brassard]")
1036	D. Brassard et al., *Substrate Biasing Effect On The Electrical Properties Of Magnetron-Sputtered High-K Titanium Silicate Thin Films*, 102 J. Applied Physics 034106 (2007) ("[2007-Brassard]")
1037	U.S. Patent App. Pub. No. 2014/0117465 ("Huang")
1038	Complaint, *Acorn Semi, LLC v. Samsung Elecs. Co., Ltd.*, No. 2:19-cv-00347, ECF No. 1 (E.D. Tex. Oct. 23, 2019)
1039	Blank
1040	Blank
1041	Blank
1042	Exhibit F to Acorn's Preliminary Infringement Contentions, *Acorn Semi, LLC v. Samsung Elecs. Co., Ltd.*, No. 2:19-cv-00347 (Mar. 9, 2020)
1043	Redacted Acorn's Opposition to Samsung's Motion for Judgment, *Acorn Semi, LLC v. Samsung Elecs. Co., Ltd.*, No. 2:19-cv-00347, ECF No. 401 (E.D. Tex. Sept. 2, 2021)

Exhibit	Description
1044	E. Piner Trial Demonstratives, Redacted Acorn's Opposition to Samsung's Motion for Judgment, Ex.B-1, *Acorn Semi, LLC v. Samsung Elecs. Co., Ltd.*, No. 2:19-cv-00347, ECF No. 401-3 (E.D. Tex. Sept. 2, 2021)
1045	Verdict Form, *Acorn Semi, LLC v. Samsung Elecs. Co., Ltd.*, No. 2:19-cv-00347 (May 19, 2021)
1046	N.F. Mott and L. Friedman, *Metal-Insulator Transitions in VO2, Ti2O3 and Ti2-xVxO3*, 30 Philosophical Magazine 389 (1974) ("[1974-Mott]")
1047	S. Åsbrink and A. Magnéli, *Crystal Structure Studies on Trititanium Pentoxide, Ti3O5,* 12 Acta Crystallographica 575 (1959) ("[1959- Åsbrink]")
1048	Dr. Kuhn's Deposition Transcript, July 6, 2021
1049	Dr. Kuhn's Deposition Transcript, July 7, 2021
1050	M.G. Kostenko et al., *Simulation of the Short-Range Order in Disordered Cubic Titanium Monoxide TiO1.0*, 97 JETP Letters 616 (2013) ("[2013-Kostenko]")
1051	A.A. Valeeva and M.G. Kostenko, *Stable Ti9O10 Nanophase Grown From Nonstoichiometric Titanium Monoxide TiOy Nanopowder*, 8 Nanosystems: Physics, Chemistry, Mathematics 816 (2017) ("[2017-Valeeva]")
1052	D. Gerlich et al., *Thermoelastic Properties of ULE® Titanium Silicate Glass*, 21 J. Non-Crystalline Solids 243 (1976) ("[1976-Gerlich]")
1053	F.Y. Robb, *Plasma Etching of Oxygen Containing Titanium Silicide Films*, 131 J. Electrochem. Soc'y 2906 (1984) ("[1984-Robb]")
1054	K. Stella et al., *Charge Transport Through Thin Amorphous Titanium and Tantalum Oxide Layers*, 158 J. Electrochem. Soc'y 5 (Mar. 28, 2011) ("[2011-Stella]")
1055	S. Lee et al., *Tunnel Barrier Engineering of Titanium Oxide For High Non-Linearity of Selector-Less Resistive Random Access Memory*, 104 Applied Physical Letters (Feb. 7, 2014). ("[2014-Lee]")
1056	Murray et al., *The O-Ti (Oxygen-Titanium) System*, 8(2) J. Phase Equilibria 148-165 (1987) ("[1987-Murray]")

Exhibit	Description
1057	S.K.J. Al-Ani et al., *The Optical Absorption Edge of Amorphous Thin Films of Silicon Monoxide*, 19 J. Materials Sci. 1737 (1984) ("1984-Al-Ani)")
1058	G.L. Tian et al., *Effect of Microstructure of Tio2 Thing Films on Optical Band Gap Energy*, 22 Chinese Physical Soc'y 7 (February 25, 2006) ("[2005-Tian]")
1059	J. Wang et al., *High-Performance Photothermal Conversion of Narrow-Bandgap TiO2O3 Nanoparticles*, 29 Advance Materials 1603730 (Nov. 11, 2016) ("[2017-Wang]")
1060	D. Roy and S.B. Krupanidhi, *Pulsed Excimer Laser Ablated Barium Titanate Thin Films*, 61 Applied Physics Letters 2057 (1992) ("[1992-Roy]")
1061	J. Hao et al., *Dielectric Properties of Pulsed-Laser-Deposited Calcium Titanate Thin Films*, 76 Applied Physics Letters 3100 (2000) ("[2000-Hao]")
1062	G.P. Shveikin, *Magnetic Properties of Ti3O6 with Chromium Additions*, 544 Z. Anorg. Allg. Chem. (1987) ("[1987-Shveikin]")
1063	S.P. Denker, *Electronic Properties of Titanium Monoxide*, 37 J. Applied Physics Letters 1 (Jan. 1966) ("[1966-Denker]")
1064	R. van de Krol et al., *Electrical and Optical Properties of TiO2 in Accumulation and of Lithium Titanate Li0.5TiO2*, 90 J. Applied Physics 2235 (2001) ("[2001-van-de-Krol]")
1065	F. Imai et al., *Interfacial Reaction of Mgo/Tiox Superlattice Thin Films*, 228 Thin Solid Films 158 (1993) ("[1993-Ima]")
1066	CC Vacuum Coating Materials Co, Ltd., (July 21, 2021) http://coatmaterials.com/html_products/TiO-(Titanium-monoxide)-64.html ("[Coat TiO]")
1067	F.M. Pontes et al., *High dielectric constant of SrTiO3 thin films prepared by chemical process*, 35 J. Materials Sci. 4783 (2000) ("[2000-Pontes]")
1068	M.M. Doeff et al., *Titanate Anodes For Sodium Ion Batteries*, Lawrence Berkeley Nat'l Lab'y (Jan. 31, 2014), https://escholarship.org/uc/item/2wr1b5xt 24 ("[2014-Doeff]")
1069	S.D. Mo and W.Y. Ching, *Electronic and Optical Properties of Three Phases of Titanium Dioxide: Rutile, Anatase, and Brookite*, 51 Physical Rev. B 19 (May 15, 1995) ("[1995-Mo]")

Exhibit	Description
1070	N.V. Nguyen et al., *Optical Properties of Jet-Vapor-Deposited TiAlO and HfAlO Determined by Vacuum Utraviolet Spectroscopic Ellipsometry, CP683 Characterization and Metrology for ULSI Technology: 2003 International Conference*, Am. Inst. Physics (2003) ("[2003-Nguyen]")
1071	V.-T. Rangel-Kuoppa and A. Conde-Gallardo, *Ohmic Contact Recipe on Tixcr2-Xo3 and Its Application to Temperature Dependent Hall Measurements, 1566 The Physics of Semiconductors*, Am. Inst. Physics Conf. Proc. 23 (2013) ("[2013-Rangel-Kuoppa]")
1072	L.B. Glebov et al., *Planar Optical Waveguides on Glasses and Glass-Ceramic Materials*, 1513 SPIE Glasses for Optoelectronics II 56 (1991) ("[1991-Glebov]")
1073	T. Shikama et al., *Erosion Behaviour of Physically Vapour-Deposited and Chemically Vapour-Deposited Sic Films Coated on Molybdenum During Oxygenated Argon Beam Thinning*, 117 Thin Solid Films 191 (1984) ("[1984-Shikama]")
1074	N. Szydlo and R. Poirier, *I-V and C-V Characteristics of Au/Ti02 Schottky Diodes*, 51 J. Applied Physics 6 (June 1980) ("[1980-Szydlo]")
1075	CPHMI Phelly Materials Inc, *Titanium Oxide (V), Ti3O5* (July 27, 2021), https://www.phelly.com/ti3o5/ ("[Phelly Ti3O5]")
1076	S.H. Hong, *Crystal Growth of Some Intermediate Titanium Oxide Phases y-Ti3O5, P-Ti3O5, Ti4O7 and Ti2O by Chemical Transport Reactions*, 36 Acta Chemica Scandinavica A (1982) ("[1982-Hong]")
1077	S. Gwo et al., *Local Electric-Field-Induced Oxidation of Titanium Nitride Films*, 74 Applied Physics Letters 1090 (1999) ("[1999-Gwo]")
1078	M. Takeuchi et al., *Dielectric Properties of Sputtered Tio2 Films*, 51 Thin Solid Films 83 (1978) ("[1978-Takeuchi]")
1079	E.T. Fitzgibbons et al., *Tio2 Film Properties as a Function of Processing Temperature*, 119 J. Electrochem. Soc. 6 (June 1972) ("[1972-Fitzgibbons]")
1080	T. Bertaud et al., *Ultra Wide Band Frequency Characterization of Integrated Titao-Based Metal–Insulator–Metal Devices*, 110 J. Applied Physics 044110 (2011) ("[2011-Bertaud]")

Exhibit	Description
1081	H. Liu et al., *Structural, Electronic, Mechanical, Dielectric and Optical Properties of Tisio4: First-Principles Study*, 251 Solid State Commc'ns 43 (2017) ("[2017-Liu]")
1082	D. Hallock et al., *Method to Fabricate Low Stress Refractory Metal Silicide Films*, 32 IBM Tech. Disclosure Bull. 190 (1989) ("[1989-Hallock]")
1083	U.S. Patent No. 4,912,286 ("Clarke")
1084	S. Yang et al., A *Novel Carbon Thermal Reduction Approach to Prepare Recorded Purity B-Ti3O5 Compacts From Titanium Dioxide And Phenolic Resin*, 853 J. Alloys & Compounds 157360 (2021) ("[2021-Yang]")
1085	S. Kashiwaya et al., *The Work Function of TiO2*, 2018 Chin. Surfaces. 1 (Sept. 7, 2018) ("[2018-Kashiwaya]")
1086	S. Bartkowski et al., *Electronic Structure of Titanium Monoxide*, 56 Physical Rev. B 10656 (1997) ("[1997-Bartkowski]")
1087	F. Marques and J.J. Jasieniak, *Ionization Potential and Electron Attenuation Length of Titanium Dioxide Deposited by Atomic Layer Deposition Determined by Photoelectron Spectroscopy in Air*, 2017 Applied Surface Sci. 422 (June 5, 2017) ("[2017-Marques]")
1088	Y. Chen, et al., *Ground State Structure and Physical Properties of Silicon Monoxide Sheet*, 527 Applied Surface Sci. 146759 (2020) ("[2020-Chen]")
1089	Petition, *Samsung Electronics Co., Ltd. v. Acorn Semi, LLC*, IPR2020-01207, Paper 2 (P.T.A.B. June 29, 2020) ("Grupp '483 IPR")
1090	Decision Granting Institution, *Samsung Electronics Co., Ltd. v. Acorn Semi, LLC*, IPR2020-01207, Paper 21 (P.T.A.B. Feb. 10, 2021) ("Grupp '483 IPR")
1091	Final Written Decision, *Samsung Electronics Co., Ltd. v. Acorn Semi, LLC*, IPR2020-01207, Paper 49 (P.T.A.B. Feb. 9, 2022) ("Grupp '483 FWD") ("Grupp '483 IPR")
1092	Trial Transcript, *Acorn Semi, LLC v. Samsung Elecs. Co., Ltd.*, No. 2:19-cv-00347 (E.D. Tex. May 14, 2021)
1093	Final Judgment, *Acorn Semi, LLC v. Samsung Elecs. Co., Ltd.*, No. 2:19-cv-00347, ECF No. 379 (E.D. Tex. July 13, 2021)

Exhibit	Description
1094	Z. Luo, *High-K Gate Dielectrics For Si CMOS Applications*, A Dissertation Presented To The Faculty Of The Graduate School of Yale University, Dec. 2003 ("2003-Luo")
1095	Complaint, *Oak IP, LLC v. GlobalFoundries, Inc., and GlobalFoundries US Inc.*, No. 25-cv-00142-MN, ECF No. 1 (D. Del. Feb. 4, 2025)
1096	Petition, *Samsung Electronics Co., Ltd. v. Acorn Semi, LLC*, IPR2020-01282, Paper 2 (P.T.A.B. July 13, 2020) ("Goodnick IPR")
1097	Final Written Decision, *Samsung Electronics Co., Ltd. v. Acorn Semi, LLC*, IPR2020-01282, Paper 56 (P.T.A.B. Feb. 9, 2022) ("Goodnick IPR")
1098	Decision Granting Institution, *Samsung Electronics Co., Ltd. v. Acorn Semi, LLC*, IPR2020-01282, Paper 20 (P.T.A.B. Feb. 10, 2021) ("Goodnick IPR")
1099	U.S. Patent No. 5,216,282 ("Cote")
1100	Markman Order, *Acorn Semi, LLC v. Samsung Elecs. Co., Ltd.*, No. 2:19-cv-00347, ECF No. 85 (E.D. Tex. Oct. 16, 2020)
1101	U.S. Patent No. 6,724,088 ("Jammy")
1102	D. Brassard et al., *Compositional Effect on the Dielectric Properties of High- Titanium Silicate Thin Films Deposited by Means of a Cosputtering Process*, J. Vac. Sci. Tech. A 24, 600 (2006) ("2006-Brassard")
1103	Stesmans et al., *Si dangling-bond-type defects at the interface of (100)Si with ultrathin SiOx, Al2O3, and ZrO2*, Applied Physics Letters 80(11):1957-59 (2002) ("2002-Stesmans")
1104	Order – Dismissed all claims, *Acorn Semi, LLC v. Samsung Elecs. Co., Ltd.*, No. 2:19-cv-00347, ECF No. 416 (E.D. Tex. Jan. 6, 2023)
1105	Certificate of Cancellation of Claims of U.S. Patent No. 10,090,395
1106	Acorn Semi, LLC, Disclaimer in U.S. Patent No. 10,090,395 under 37 C.F.R. 1.321(a), Claim 10 (Nov. 13, 2020)
1107	S. M. Sze, *Semiconductor Devices: Physics and Technology*, 2nd Ed. 2002 Textbook ("Sze Textbook")
1108	Lucovsky et al, *Bonding Constraint-Induced Defect Formation at Si-Dielectric Interfaces and Internal Interfaces in Dual-Layer Gate*

Exhibit	Description
	Dielectrics, 17 J. Vac. Sci. Tech. (Jul/Aug 1999) ("1999-Lucovsky")
1109	GlobalFoundries waiver of service (Mar. 4, 2025)
1110	Groner et al, *Electrical Characterization of Thin Al2O3 Films Grown By Atomic Layer Deposition on Silicon and Various Metal Substrates*, 413 Thin Solid Films 186-197 (2002) ("2002-Groner")
1111	Tsai et al, *Surface Preparation and Interfacial Stability of High-K Dielectrics Deposited by Atomic Layer Chemical Vapor Deposition*, 65 Microelectronic Eng'g 259-272 (2003) ("2002-Tsai")
1112	Raider et al, *Oxide Growth on Etched Silicon in air at room Temperature*, J. Electrochem. Soc.: Solid-State Sci. & Tech. (Mar. 1975) ("1975-Raider")
1113	Cerofolini et al, *Mechanisms and Kinetics of Room-Temperature Silicon Oxidation*, 216 J. Non-Crystalline Solids 140-147 (1997) ("1997-Cerofolini")
1114	Mende et al, *Oxidation of Etched Silicon in Air at Room Temperature; Measurements With Ultrasoft X-Ray Photoelectron Spectroscopy (ESCA) and Neutron Activation Analysis*, 128 Surface Sci. 169-175 (1983) ("1983-Mende")
1115	Toshiba, *e-learning: Basics of Schottky Barrier Diodes*, Ch. 1 (2002), https://toshiba.semicon-storage.com/us/semiconductor/knowledge/e-learning/basics-of-schottky-barrier-diodes/chap1/chap1-1.html
1116	Final Written Decision, *Samsung Electronics Co., Ltd. v. Acorn Semi, LLC*, IPR2020-01183, Paper 52 (P.T.A.B. Feb. 9, 2022)
1117	TiO Melting Point
1118	TiO_2 Melting Point
1119	Ti_2O_3 Melting Point
1120	D. Connelly, *A New Route to Zero-Barrier Metal Source/Drain MOSFETs*, 3 IEEE Transactions on Nanotechnology 98 (2004)
1121	G. Shine and K. C. Saraswat, *Limits of Specific Contact Resistivity to Si, Ge and III-V Semiconductors Using Interfacial Layers, in 2013 International Conference on Simulation of Semiconductor Processes and Devices (SISPAD)*, Glasgow, UK 69 (2013)
1122	Samsung's Opening Brief, *Samsung-Electronics Co. v. Acorn Semi, LLC*, No. 2022-1539, Doc. 19 (Fed. Cir. Jun. 24, 2022)

Exhibit	Description
1123	Acorn's Corrected Response Brief, *Samsung-Electronics Co. v. Acorn Semi, LLC*, No. 2022-1539, Doc. 19 (Fed. Cir. Oct. 11, 2022)
1124	File History of U.S. Patent No. 11,056,569
1125	U.S. Patent No. 11,056,569
1126	File History of U.S. Patent No. 11,018,237
1127	U.S. Patent No. 11,018,237
1128	U.S. Patent No. 5,792,703 ("Bronner")
1129	U.S. Patent No. 10,090,395 ("the '395 Patent")
1130	File History of U.S. Patent No. 10,090,395
1131	Petition, *Samsung Electronics Co., Ltd. v. Acorn Semi, LLC*, IPR2020-01206, Paper 2 (P.T.A.B. June 29, 2020) ("Grupp '483 IPR")
1132	Decision Granting Institution, *Samsung Electronics Co., Ltd. v. Acorn Semi, LLC*, IPR2020-01206, Paper 22 (P.T.A.B. Jan. 13, 2021) ("Grupp '483 IPR")
1133	Final Written Decision, *Samsung Electronics Co., Ltd. v. Acorn Semi, LLC*, IPR2020-01206, Paper 49 (P.T.A.B. Jan. 12, 2022) ("Grupp '483 IPR")
1134	Petition, *Samsung Electronics Co., Ltd. v. Acorn Semi, LLC*, IPR2020-01279, Paper 2 (P.T.A.B. July 10, 2020) ("Goodnick IPR")
1135	Decision Granting Institution, *Samsung Electronics Co., Ltd. v. Acorn Semi, LLC*, IPR2020-01279, Paper 20 (P.T.A.B. Jan. 13, 2021) ("Goodnick IPR")
1136	Final Written Decision, *Samsung Electronics Co., Ltd. v. Acorn Semi, LLC*, IPR2020-01279, Paper 55 (P.T.A.B. Jan. 12, 2022) ("Goodnick IPR")

APPENDIX C: CV

Curriculum Vitae: E. Fred Schubert

Contact information

Department of Electrical, Computer, and Systems Engineering
Rensselaer Polytechnic Institute
110 Eighth Street, Troy, NY 12180
Telephone 518-276-8775 (office); Cell phone 518-253-3762
Email: EFSchubert@rpi.edu Homepage: http://www.rpi.edu/~schubert

Citizenship

Born in Stuttgart, Germany (1956)
Naturalized United States Citizen (1995)

Education

University of Stuttgart	Electrical Engineering	Vordiplom	(U. S. equivalent BSEE)	1978
University of Stuttgart	Electrical Engineering	Diplom Ingenieur (Honors)	(U. S. equivalent MSEE)	1981
Oregon State University	Electrical Engineering	Exchange Student		1977–1978
University of Stuttgart	Electrical Engineering	Doktor Ingenieur (Honors)	(U. S. equivalent Ph.D.)	1986

Current appointment

2002 – present: Professor, Department of Electrical, Computer, and Systems Engineering; Rensselaer Polytechnic Institute, Troy NY

Previous appointments

2002 – 2015: Head and Founder of the Future Chips Constellation; Rensselaer Polytechnic Institute

2002 – 2015: Wellfleet Senior Constellation Professor, Future Chips (Chaired Professor); Rensselaer Polytechnic Institute

2002 – 2012: Professor Department of Physics, Applied Physics, and Astronomy; Rensselaer Polytechnic Institute

2008 – 2009: Director, Founding Director, and Principal Investigator, NSF Engineering Center for Smart Lighting, Rensselaer Polytechnic Institute

2002 – 2003: Adjunct Professor, Boston University

1995 – 2002: Professor, Boston University, Department of Electrical and Computer Engineering; Director of the Semiconductor Devices Research Laboratory; Affiliated Faculty of the Photonics Center.

1988 – 1995: Member of Technical Staff; Principal Investigator; and Member of Management at AT&T Bell Laboratories in Murray Hill, New Jersey

1985 – 1987: Post-Doctoral Member of Technical Staff at AT&T Bell Laboratories in Holmdel, New Jersey.

1981 – 1985: Scientific Member of Staff in the Department of Solid-State Chemistry at the Max Planck Institute for Solid-State Research in Stuttgart, Germany. Ph.D. Dissertation title: "Modern Schottky gate field-effect transistors based on III–V semiconductors"

Fields of Technical Expertise, Hands-on Experience, and Teaching

- Expertise, hands-on experience, and teaching in semiconductor opto-electronics including the following devices: LED, semiconductor laser, vertical cavity surface-emitting laser (VCSEL), solar cell, photo-detector, LED displays, micro-LED displays, LCD displays, and OLED displays. The activities include the design, fabrication, processing, and packaging of the devices, and the use of the devices in circuits and systems. (1981 to present)
- Expertise, hands-on experience, and teaching in semiconductor electronics including the following devices: MESFET, HFET, MOSFET, CMOS-FET, LDD MOSFET, LD MOS FET, FinFET, GAA FET, Vertical MOSFET (high-power MOSFET), thyristor, GTO thyristor, and IGBT. The activities include the design, fabrication, processing, and packaging of the devices, and the use of the devices in discrete and integrated circuits. (1979 to present)
- Expertise, hands-on experience, and teaching in thin-film deposition of metal, semiconductor, and insulator films by PVD (physical vapor deposition) and CVD (chemical vapor deposition) including PECVD (plasma enhanced CVD), MOCVD (metal-organic CVD), ALE (atomic layer epitaxy), ALD (atomic layer deposition), and bulk crystal growth (AlN, GaN, and sapphire). Epitaxial growth of silicon, III-V arsenide, phosphide and nitride epitaxial layers on GaAs, sapphire, Si, and GaN substrates by epitaxy including molecular beam epitaxy (MBE),

GF Exhibit 1022 - 126/175

metal-organic chemical vapor deposition (MOCVD), and vapor-phase epitaxy (VPE). High-k materials, low-k-materials, phosphors, resins, polymers, encapsulants, alloy semiconductors and their deposition technologies such as epitaxy, CVD, and PVD. Doping of semiconductors by various means including delta doping and atomic monolayer doping. (1981 to present)

- Expertise, hands-on experience, and teaching in the design, operation, and usage of semiconductor devices in lighting systems, communication systems, and power-supply systems and in the analysis and development of LED power supplies using Boost and Buck Converters. (1993 to present)

Technical Research Activities

- Design, development and fabrication of a Si pressure sensor based on the piezo-resistivity of Si using a bridge configuration of four thin-film Si resistors (1979 – 1980)
- Design of a electro-optic Mach-Zehnder Interference Modulator based on Lithium niobate ($LiNbO_3$) operating at a wavelength of 1300 nm (1980 – 1981)
- First study of hot electron effects in selectively doped $Al_xGa_{1-x}As$/GaAs heterostructures (1983)
- Demonstration and elimination of parallel conduction in $Al_xGa_{1-x}As$/GaAs heterostructures (1984)
- First analysis of semiconductors doped with simultaneously shallow and deep donors (1984).
- Development and use of thyristor circuits (including GTO thyristor circuits) for the control of a lamp heating system (1984 – 1985)
- Proposal and demonstration of the δ-doped field-effect transistor. Short-channel effects in sub-micron field-effect transistors can be reduced to their theoretical minimum by using δ-doped structures (1985)
- Development of the theory of alloy broadening in luminescence spectra of alloy semiconductors such as $Al_xGa_{1-x}As$. The current understanding of the low-temperature spectral linewidths of ternary and quaternary alloy semiconductors is based on this theoretical model. The publication analyzing the phenomenon of alloy broadening has been referenced far in excess of 100 times (1984)
- First demonstration of a light-emitting diode with a doping superlattice active region (1985)
- Application of δ-doping to selectively doped heterostructures; Demonstration of high-electron-mobility transistors (HEMTs) with highest free electron concentrations; Analysis of structures by SEM, TEM, and SIMS (1986).
- Demonstration of delta-doped non-alloyed ohmic contacts with very low contact resistance and subsequent demonstration of self-aligned field-effect transistor with delta-doped non-alloyed ohmic contacts (1986)
- Demonstration of the spatial localization of dopants within 20 Å for a number of doping elements in delta-doped semiconductors including GaAs and Si for MESFET and lightly-doped drain (LDD) MOSFET applications and the analysis of delta-doped structures by SIMS (secondary ion mass spectrometry) (with colleague Henry S. Luftman, 1983-1995)
- Significant improvement of the optical properties of doping superlattices by employment of delta doping. Improvement is demonstrated by the first observation of quantized interband transitions in the absorption (1988) and in the emission spectra (1989)
- First demonstration of tunable doping superlattice laser (1989)
- First quantitative analysis of the capacitance-voltage (CV) profiling technique in semiconductors with quantum-confined carriers. Demonstration that resolution of CV profiles in quantum-confined semiconductors is not limited to the Debye screening length (1990)
- Invention and demonstration a new concept by which heterojunction band discontinuities occurring between two different semiconductors are eliminated. The *elimination of heterojunction barriers* is based on parabolic compositional grading of doped heterojunctions. This concept is widely used in the fabrication of vertical cavity surface emitting lasers and other heterojunction devices (1991)
- Invention and first demonstration of resonant cavity light-emitting diode (RCLED) which uses photon quantization in microcavities to enhance the spontaneous emission properties (1992)
- Demonstration of giant enhancement of luminescence intensity in Er-doped Si-SiO_2 microcavities (1992)
- First demonstration of a resonant-cavity detector which is useful for wavelength-selective detection (1993)
- Demonstration of resonant-cavity light-emitting diode (RCLED) with very high brightness. The experimental brightness of the RCLED is five times higher than that of conventional LEDs. Based on calculations, the brightness of RCLEDs is expected to exceed that of conventional LEDs by more than a factor of ten (1994)
- Demonstration of delta doping in silicon for the fabrication of shallow junctions in scaled-down Si lightly-doped drain (LDD) MOSFETs for integrated circuits (Si ICs) (with colleague Dr. H. J. Gossmann, 1990 – 1995)
- Invention of a new concept, *superlattice doping*, for enhanced p-type doping of GaN. All acceptors in GaN are deep, resulting in a low electrical acceptor activation of only 5 %. The new concept of superlattice doping is expected to increase the electrical activation of acceptors by more than a factor of ten (with post-doctoral associate Dr. W. Grieshaber, 1995)

GF Exhibit 1022 - 127/175

- Investigation of yellow luminescence in GaN and the use of microcavity effects in Ag / GaN / sapphire structures to determine the refractive index of GaN (with post-doctoral associate Dr. W. Grieshaber, 1996)
- Demonstration of the first GaN / GaInN double heterostructure laser. The laser has cleaved facets and was optically pumped. Laser action was demonstrated by (*i*) a threshold in the light-versus-current characteristic, (*ii*) spectral narrowing below *kT* above threshold, (*iii*) a TE / TM polarization ratio greater than one hundred above threshold, and (*iv*) increased slope efficiency with increasing back-side facet reflectivity (with graduate student D. A. Stocker, 1997)
- Co-inventor of photonic-crystal light-emitting diode, PC-LED, jointly with group of Prof. John D. Joannopoulos at MIT (publication by Shanhui Fan *et al*. appeared in *Physical Review Letters* in 1997; US patent 5,955,749 was issued in 1999)
- First demonstration of crystallographic etching of GaN (with graduate student D. A. Stocker, 1998). The discovery, crystallographic etching, can be implemented by wet chemical etching, including photo-enhanced electrochemical (PEC) wet etching. The discovery is widely used in the LED industry to strongly enhance light extraction from LED chips and is found in LED light bulbs.
- Experimental demonstration of a ten-fold enhancement of p-type doping activation in $Al_xGa_{1-x}N$/GaN doped superlattices as compared to bulk GaN and $Al_xGa_{1-x}N$ (with graduate students D. A. Stocker and I. D. Goepfert, 1999)
- Invention and demonstration of the photon-recycling semiconductor light-emitting diode (PRS-LED) which emits *white* light and many other colors with very high luminous performance of > 300 lm/W (with graduate students X. Guo and J. W. Graff, 1999). Invention of the monolithically integrated GaInN/GaN PRS-LED (with graduate students X. Guo and J. W. Graff, 2000)
- Invention and demonstration of polarization-enhanced ohmic contacts in p-type and n-type GaN (with graduate students Y.-L. Li and J. W. Graff 2000)
- Invention and demonstration of AlGaInP light-emitting diode with omni-directional reflector (ODR) for high light extraction efficiency (with post-doctoral associate Th. Gessmann and graduate student J. W. Graff, 2001)
- Developed novel model for high diodes ideality factors (n >> 2.0) in UV LEDs based on multiple rectifying elements (with graduate student J. M. Shah and Prof. Th. Gessmann, 2003)
- Developed new class of materials, low-refractive index materials, or low-*n* materials, with an unprecedented low refractive index of n < 1.10; use of these materials as low-*k* materials for inter-metal-layer dielectrics in Si lightly-doped drain (LDD) MOSFETs in conjunction with ALD-deposited high-*k* gate dielectric MOSFETs for integrated circuits (Si ICs) (with Dr. Jong Kyu Kim, "JQ" Xi, Professors Joel Plawsky, Bill Gill, starting in 2003)
- Developed theory for temperature coefficient of forward voltage in light-emitting diodes, particularly UV light-emitting diodes (with graduate student Yangang "Andrew" Xi, Dr. Jong Kyu Kim, and collaborators at Sandia National Laboratories, 2004, 2005)
- Invented highly efficient "remote phosphor configurations" in white light-emitting diodes (with Jong Kyu Kim, Hong Luo, and collaborators at SAIT-Samsung) (2004, 2005)
- Discovered whispering gallery modes in white LEDs with remote phosphors (with graduate student Hong Luo, Jong Kyu Kim, Yangang "Andrew" Xi, and collaborators at SAIT-Samsung, 2005)
- Developed graded-index antireflection coatings that, unlike conventional anti-reflection coatings, have broadband omni-directional characteristics; the graded-index antireflection coatings use novel low-*n* materials (with Jingqun "JQ" Xi, Jong Kyu Kim, 2007)
- Developed efficiency-droop reducing GaInN / GaInN and GaInN / AlGaInN LED active regions grown by MOCVD and ALE that were demonstrated to reduce the efficiency droop by as much as 40% (with Jong Kyu Kim, Martin F. Schubert, Di Zhu, Jiuru Xu, Mary Crawford, and Dan Koleske, starting in 2007)
- Developed analytic model for efficiency droop based on drift-induced reduction of the carrier-injection efficiency (with Guan Bo Lin, Jaehee Cho, and others, 2012)

Honors and awards

- Google Scholar profile, including the Hirsch-index (h-index) can be found at < http://scholar.google.com > under profile "E. Fred Schubert"
- Elected to *Senior Member* of the *IEEE* "in recognition of professional standing" (1993)
- Recipient of the Literature Prize of the *Verein Deutscher Elektrotechniker* (*VDE*) for "Doping in III–V semiconductors" (Cambridge University Press, Cambridge, 1993). Citation: "The book concerns all aspects of doping in III–V semiconductors. Fundamental, practical, and technological issues of doping are addressed. The book covers the basic theory of shallow donors, shallow acceptors, deep levels, and their influence on the free carrier concentration. It also discusses doping during growth, epitaxy, diffusion, and ion implantation. In the field of semiconductor devices, the book emphasizes applications requiring highly controlled doping distributions. It is an excellent monograph equally suited for study, research, and industry" (1994)

GF Exhibit 1022 - 128/175

- Elected as a member of the *Bohemian Physical Society* (Cornell University, Ithaca, NY). Citation: "For seminal contributions to the control of spontaneous emission by use of wavelength-size optical cavities, specifically the first demonstration in a glass host using rare earth implanted Si/SiO_2 resonant microcavities" (1994)
- Listed in "Who's Who In Science And Engineering" and "Who's Who in America" published by *Marquis Who's Who*, publishers of the original *Who's Who in America*. (*Marquis Who's Who*, New Providence, NJ) ISBN 0-8379-5755-9 (1996 – present)
- Elected Fellow *of the SPIE* "For pioneering research in semiconductor doping and sustained contributions to the development of high-efficiency light-emitting diodes and lasers". According to the Society's bylaws, a Fellow "shall be distinguished through his achievements and shall have made outstanding contributions in the field of optics, or optoelectronics, or in a related scientific, technical, or engineering field" (1999)
- Recipient of the *Alexander von Humboldt Senior Research Award* of the Alexander von Humboldt Foundation, a Bonn-based non-profit organization promoting the exchange of scientific knowledge between German and highly qualified foreign scholars. According to the Alexander von Humboldt Foundation, academic qualification is the only selection criterion for the award. The award resulted in two extended visits with the Microoptics Laboratory of Professor Jürgen Jahns at the University of Hagen, Germany (1999)
- Elected to *Fellow of the IEEE* "for contributions to semiconductor doping and resonant-cavity devices". According to the IEEE definition "the grade of Fellow is one of unusual professional distinction conferred by the Board of Directors only upon a person of extraordinary qualifications and experience" (1999)
- Listed in the "Dictionary of International Biography, 29th Edition" published by the *International Biography Center*, Cambridge, United Kingdom (2000)
- Recipient of the 2000 *Discover Magazine Award for Technological Innovation* presented by the *Christopher Columbus Foundation* in the category "Energy". The prize was awarded "for the invention and demonstration of the photon recycling semiconductor light-emitting diode", an all-semiconductor LED capable of emitting white light with very high efficiency, see < www.discover.com/awards > (2000)
- Recipient of the *RD100 Award* of the R&D Magazine that honors the "100 most technologically significant products of the year" (with Klaus Streubel of Osram-Sylvania Corp. and Rickard Marcks von Wurtemberg of Mitel Corp.). The prize was awarded for the "*Resonant-cavity light-emitting diode*" that uses enhanced spontaneous emission occurring in resonant cavities. The device is used in plastic optical fiber communication links, in telescopes for rifles, and many other applications (2000).
- Elected to *Fellow of the OSA* "for the invention and demonstration of the resonant-cavity LED and the photon-recycling semiconductor LED". OSA Fellows are elected by the OSA Board of Directors (2001)
- Recipient of the Boston University Provost Innovation Fund Award (Provost Dennis D. Berkey) valued at $ 25,000 for research and development of promising technologies (2001)
- Elected to *Fellow of the APS* "for pioneering contributions to the doping of semiconductors including delta doping, doping of compositionally graded structures resulting in the elimination of band discontinuities, and superlattice doping to enhance acceptor activation" (2001)
- Honored with RPI Medal as Senior Constellation Chair during Investiture Ceremony (2002)
- Received "2002 Rensselaer Polytechnic Institute Trustee Faculty Achievement Award" (2002)
- Inducted as Wellfleet Senior Constellation Professor, Future Chips, Rensselaer Polytechnic Institute, November 21 (November 2003)
- Distinguished Lecturer of the IEEE Electron Devices Society (2003–2006)
- Elected member in Eta Kappa Nu (2004)
- "Best Oral Presentation Award" was won by Ph. D. student Hong Luo (who was the presenter), J. K. Kim, Y. A. Xi, J. M. Shah, Th. Gessmann and E. F. Schubert "Improvement of extraction efficiency of GaInN light-emitting diodes by employment diffuse omni-directional reflectors" *Connecticut Microelectronics & Optoelectronics Consortium (CMOC)*, 14th annual symposium, New Haven CT, March 17 (March 2005).
- "Best Student Poster Award" of the *International Semiconductor Device Research Symposium (ISDRS)* was won by Ph. D. student J.Q. Xi (presenter), Jong Kyu Kim, Dexian Ye, Jasbir S. Juneja, T.-M. Lu, Shawn-Yu Lin, and E. Fred Schubert "Optical Thin Films with Very Low Refractive Index and Their Application in Photonic Devices", *International Semiconductor Device Research Symposium (ISDRS)*, Dec. 7 – 9, Bethesda, MD (December 2005)
- "MRS Silver Award" of the Materials Research Society was won by Ph. D. student Yangang Andrew Xi (who was the presenter), K. X. Chen, F. Mont, J. K. Kim, C. Wetzel, E. F. Schubert, W. Liu, X. Li, J. A. Smart "Extremely high quality AlN grown on (0001) sapphire by using metal-organic vapor-phase epitaxy" *Materials Research Society (MRS) Fall Meeting*, Boston MA, November 27 – December 1 (2006) Boston MA (December 2006)
- "25 Most Innovative Micro- and Nano-Products of 2007 Award" in July 2007 issue of *R&D Magazine* and *Micro/Nano Newsletter*. This recognition was given for the "Non-Reflective Coating" product that was published in *Nature Photonics* in 2007; full citation: Xi, J.-Q., Martin F. Schubert, J. K. Kim, E. F. Schubert,

GF Exhibit 1022 - 129/175

Minfeng Chen, Shawn-Yu Lin, Wayne Liu, and Joe A. Smart "Optical thin-film materials with low refractive index for broadband elimination of Fresnel reflection" *Nature Photonics* **1**, 176, March 2007 (July 2007)

- "Scientific American 50 Award" of 2007, as published in the January 2008 issue of *Scientific American*. According to the *Scientific American Magazine*, this award "celebrates visionaries from the worlds of research, industry and politics whose recent accomplishments point toward a brighter technological future for everyone" (January 2008)
- "Editors' Choice" of *Science Magazine*, *Science*, Volume **319**, page 1163, February 29 (February 2008). This distinction was awarded for the publication: Jong Kyu Kim et al., "Light-extraction enhancement of GaInN light-emitting diodes by graded-refractive-index indium tin oxide anti-reflection contact" that appeared in *Advanced Materials* **20**, 801, 2008 (February / March 2008)
- Received "2008 Rensselaer Polytechnic Institute Trustee Faculty Achievement Award" (2008)
- "Best Oral Presentation Award" won by David J. Poxson (who was the presenter), Frank W. Mont, Jong Kyu Kim, and E. Fred Schubert "Multilayer nano-structured anti-reflection coating with broad-band omni-directional characteristics" *Connecticut Microelectronics and Optoelectronics Conference* (*CMOC*), University of Connecticut, Storrs, Connecticut, April 9 (April 2008)
- "Best Oral Presentation Award" for presentation: David Meyaard, Sameer Chhajed, Jaehee Cho, E. Fred Schubert, Jong Kyu Kim, Daniel D. Koleske, and Mary H. Crawford "Temperature-dependent light-output characteristics of GaInN light-emitting diodes with different dislocation densities" *Connecticut Microelectronics and Optoelectronics Consortium* (CMOC) Symposium, New Haven CT, March 2 (March 2011)
- Identified as top 1% of patentees in the field of optoelectronics by study conducted by Professor Erica Fuchs of Carnegie Mellon University under a study supported by the US National Science Foundation (July 2011)
- Received "2012 Rensselaer Polytechnic Institute Trustee Faculty Achievement Award" (November 2012)
- My "LinkedIn" profile was one of the top 10% most viewed "LinkedIn" profiles during 2012 (January 2013)
- My graduate student, Mr. Ming Ma, received the $ 30,000.00 Lemelson-Rensselaer Student Prize for the invention entitled "Graded-refractive-index (GRIN) structures for brighter and smarter light-emitting diodes"; The Prize is awarded annually by the Lemelson Foundation (March 2013)
- Received the IEEE Life Fellow Award (2022)

Service to the technical community

- Current or former member of the *American Physical Society* (Member of the *Division of Materials Physics*, Member of the *Division of Condensed Matter Physics*), *Institute of Electrical and Electronics Engineers*, *Materials Research Society*, *Optical Society of America*, *Society for Optical Engineering* (*SPIE*), and the *Verein Deutscher Elektrotechniker*
- Co-author of hundreds of research articles, co-inventor of more than 30 United States patents, and numerous foreign patents (1981 – present)
- Gave many invited talks at scientific conferences organized by the *American Physical Society*, *Institute of Electrical and Electronic Engineers*, *Materials Research Society*, *SPIE* (*The International Society for Optical Engineering*), *Electrochemical Society*, *American Vacuum Society*, *Engineering Foundation*, and other professional societies (1985 – present).
- Co-editor (with A. M. Glass) of a Special Issue of the *Journal of Optical and Quantum Electronics* (Vol. **22**, 1990) on "Charge-transport assisted optical non-linearities in semiconductors" (1990)
- Symposium chair of the *American Vacuum Society Greater New York and New Jersey Chapter* on "Epitaxially grown semiconductors with atomic level control" (1991).
- Moderator of MRS Internet discussion on "Doping and Dopants in GaN" (MRS Internet Journal, 1995 – 1997)
- Member of review panels of the National Science Foundation (1995 – present)
- Conference Chair of SPIE Photonics West conference on "Light-emitting diodes: Research, Manufacturing, and Applications" San Jose, CA (1997)
- Technical work has been featured in popular journals, magazines and newspapers including the New Scientist, Discover Magazine, Wall Street Journal, Boston Globe, Focus, and on National Public Radio (1996 – present)
- Conference Chair of SPIE Photonics West conference on "Light-emitting diodes: Research, Manufacturing, and Applications" San Jose, CA (1998)
- Program Committee Member: IEEE IEDM, International Electron Devices Meeting (1999 and 2000)
- Conference Chair of SPIE Photonics West conference on "Light-emitting diodes: Research, Manufacturing, and Applications" San Jose, CA (1999)
- Program Committee Member: ISBLLED, International Symposium on Blue Laser and Light-Emitting Diodes, Berlin, Germany, March 5 – 10 (2000)
- Conference Chair of SPIE Photonics West conference on "Light-emitting diodes: Research, Manufacturing, and Applications" San Jose, CA (2000)

GF Exhibit 1022 - 130/175

- Conference Chair and Co-Organizer of the TMS- and ONR-sponsored conference on "Doping, Dopants, and Low Field Carrier Dynamics in Wide Gap Semiconductors", Copper Mountain, Colorado, April 2 - 6 (2000)
- Chair, IEEE LEOS, Central New England Chapter. During my tenure as Chair, the Central New England Chapter won the IEEE LEOS Chapter award for the highest membership growth (1999 – 2000)
- Expert Witness involving semiconductor materials, devices, and packaging including elemental and compound semiconductors such as Si, SiGe, SiC, as well as III–V arsenides, phosphides and nitrides (1998 – present)
- Member of the Board of Governors, IEEE Laser and Electro-Optics Society (LEOS) (1999 – 2000)
- Member of the Optoelectronics Industry Development Association (OIDA) Roadmap Panel on Solid-State Lighting, Albuquerque NM Oct. 26 – 28 (2000)
- Conference Chair of SPIE Photonics West conference on "Light-emitting diodes: Research, Manufacturing, and Applications" San Jose, CA (2001)
- Panel Member of National Research Council meeting on "Solid-State Lighting:" held at NAS and NAE, Washington DC, March 26 (2001)
- Program Committee Member of SPIE Photonics West conference on "Laser and LED Applications" chaired by Dr. Kurt Linden, San Jose CA Jan (2002)
- Conference Chair of SPIE Photonics West conference on "Light-emitting diodes: Research, Manufacturing, and Applications" San Jose, CA (2002)
- Program Committee Member: ISBLLED, International Symposium on Blue Laser and Light-Emitting Diodes, Cordoba, Spain, March 11–15 (2002)
- Program Committee Member for subcommittee on "Semiconductor lasers and LEDs" for OSA Conference on Lasers and Electro-Optics and Quantum Electronics and Laser Science Conference (CLEO / QELS) (2002 – 2003) Baltimore MD June 1–6 (2003)
- Reviewer for the National Research Council of report entitled "Partnerships for Solid-State Lighting: Report of a Workshop" authored by the Board on Science, Technology, and Economic Policy. This report is forwarded to the US Congress for the initiation of a national Solid-State Lighting Initiative. (2002)
- Program Committee Member "Lester Eastman conference on high performance devices" University of Delaware, Newark, Delaware, August 6 – 8 (2002)
- Conference Chair of SPIE Photonics West conference on "Light-emitting diodes: Research, Manufacturing, and Applications" San Jose CA (2003)
- OIDA Next Generation Lighting (NGL) Consortium. Member of "Light-Emitting Diode" Committee (2003)
- Program Committee Member, International Semiconductor Device Research Symposium (ISDRS) Washington DC, Dec. 8 – 12 (2003)
- Program Committee Member of "Display and Solid-State Lighting Devices" conference for OSA/IEEE Conference on Lasers and Electro-Optics (CLEO) (2003 – 2004)
- Elected Member of the IEEE Electron Device Society Administration Committee (IEEE AdCom) (2003 – 2008)
- Conference Chair of SPIE Photonics West conference on "Light-emitting diodes: Research, Manufacturing, and Applications" San Jose CA (2004)
- Program Committee Member "Fourth International Conference on Solid-State Lighting" August 2 – 6 Denver, CO (2004)
- Program Committee Member for the "Blue 2004: Advanced LEDs and Lasers Conference" Hsinchu, Taiwan, May 10 – 12 (2004)
- Conference Chair of SPIE Photonics West conference on "Light-emitting diodes: Research, Manufacturing, and Applications" San Jose CA (2005)
- Program Committee Member "International Semiconductor Device Research Symposium" December 7 – 9 Washington, DC (2005)
- Chair of "Display and Solid-State Lighting Devices" conference of OSA/IEEE Conference on Lasers and Electro-Optics (CLEO) (2005)
- Best Oral Presentation Award (Presenter: Hong Luo) at *Connecticut Microelectronics & Optoelectronics Consortium* (CMOC), 14th annual symposium, New Haven CT, March 17 (March 2005)
- Conference Chair of MRS Spring meeting "Symposium DD: Solid-State Lighting Materials and Devices" San Francisco, April 17 – 21 (April 2006)
- Member on the International Advisory Committee of *First International Conference on Display LEDs* (ICDL 2007), Seoul, Korea, January 31 to February 2 (2007)
- Member, Program Committee of *SPIE Photonics West* conference "Light-Emitting Diodes: Research, Manufacturing, and Applications XI" San Jose, CA, January 20 – 25 (2007)
- Program Chair of *SPIE Photonics West* conference "Semiconductor Lasers and LEDs" San Jose, CA, January 20 – 25 (2007)
- Member, Executive Organizing Committee *SPIE Photonics West* conference "LASE 2007" San Jose, CA, January

GF Exhibit 1022 - 131/175

20 – 25 (2007)

- Opto Track Chair of *SPIE Photonics West* conference "Semiconductor Lasers and LEDs" San Jose, CA, January 21 – 24 (January 2008)
- Member, Program Committee, Light-emitting diodes: Research, Manufacturing, and Applications, SPIE Photonics West 2008, San Jose, California, January 19 – 24 (January 2008)
- Program Committee Member of the 7th International Symposium on Semiconductor Light Emitting Devices (ISSLED-2008) held in Phoenix, Arizona (USA), April 27 – May 2 (April 2008)
- Member, Program Committee, China SSL 2008, Shenzhen Convention & Exhibition Center, China, July 24 – 26 (July 2008)
- Member, Program Committee, International Workshop on Nitride Semiconductors, IWN 2008, Montreux, Switzerland, October 6 – 10 (October 2008)
- Opto Track Chair of *SPIE Photonics West* conference "Semiconductor Lasers and LEDs" San Jose, CA, January 25 – 29 (January 2009)
- Guest Editor of Special Issue on *Solid-State Lighting* published in the *IEEE Journal of Selected Topic in Quantum Electronics*, July / August edition (August 2009)
- Honorable Conference Chair, 6th China International Forum on Solid-State Lighting (China SSL), Shenzhen Convention & Exhibition Center, China, October 14 – 16 (October 2009)
- Program Committee Member, International Conference on Nitride Semiconductors (ICNS), Jeju, South Korea, October 18 – 23 (October 2009)
- Program Committee Member, The Second International Conference on White LEDs and Solid-State Lighting, Taipei, Taiwan, December 13 – 16 (December 2009)
- Editor, *Compound Semiconductors and Energy Applications and Environmental Sustainability*, Materials Research Society (MRS) Symposium Proceedings Volume 1167 (MRS, Warrendale PA, 2009)
- Conference Chair, OPTO, *SPIE Photonics West 2010*, San Francisco, California, January 23 – 27 (January 2010)
- Guest Editor of Special Issue on *Light-Emitting Diodes* published in the *IEEE Transactions on Electron Devices* (January 2010)
- Program Committee Member, *8th International Symposium on Semiconductor Light Emitting Devices* (ISSLED), Beijing, China, May 16 – 21 (May 2010)
- International Advisory Committee Member of the 16th *Microoptics Conference* (MOC'10) held in Hsinchu, Taiwan, sponsored and endorsed by OSA and IEEE/Photonics Society and organized by National Chiao Tung University, Oct. 31 to Nov. 3 (October 2010)
- Member of Academic Committee of *China Solid-State Lighting Conference* (CHINA SSL 2010) Shenzhen, China, October 14 – 16 (October 2010)
- Conference Co-Chair, OPTO, *SPIE Photonics West 2011*, San Francisco, California, January 22 – 27 (January 2011)
- Executive Organizing Committee OPTO, *SPIE Photonics West 2011*, San Francisco, California, January 22 – 27 (January 2011)
- Program Committee Member of conference entitled: "Light-Emitting Diodes: Materials, Devices, and Applications for Solid-State Lighting XV *SPIE Photonics West 2011*, San Francisco, California, January 22 – 27 (January 2011)
- Member of CLEO Subcommittee 15, entitled "LEDs, Photovoltaics and Energy-Efficient ("Green") Photonics" for the 2011 Conference on Lasers and Electro-Optics (CLEO), Baltimore, Maryland May 1 – 6 (May 2011)
- Member of the Academic Committee of the 8th China International Forum on Solid-State Lighting (CHINA-SSL-2011) Guangzhou November 8 – 10 (November 2011)
- Program Committee Member of conference entitled: "Light-Emitting Diodes: Materials, Devices, and Applications for Solid-State Lighting XV *SPIE Photonics West 2012*, San Francisco, California, January 21 – 26 (January 2012)
- Member of CLEO Subcommittee 15, entitled "LEDs, Photovoltaics and Energy-Efficient ("Green") Photonics" for the 2012 Conference on Lasers and Electro-Optics (CLEO), San Jose, California, May 6 – 11 (May 2012)
- Member of Academic Committee of the 9th China International Forum on Solid-State Lighting (CHINA SSL 2012), Guangzhou, China, November 5 – 7, 2012 (November 2012)
- Program Committee Member of conference entitled: "Light-Emitting Diodes: Materials, Devices, and Applications for Solid-State Lighting XVI *SPIE Photonics West 2013*, San Francisco, California, 2 – 7 February 2013 (February 2013)
- Member of CLEO Subcommittee in the topic area: "Science & Innovation 15: LEDS, Photovoltaics and Energy-Efficient ("Green") Photonics" for the CLEO 2013 conference, April 28 – May 3, 2013 in Baltimore, Maryland (May 2013)
- Member, International Advisory Committee of the International Conference on Advanced Electromaterials (ICAE 2013) held on Jeju Island, Korea, from November 12 – 15, 2013 (November 2013)

GF Exhibit 1022 - 132/175

- Program Committee Member, *Solid-State and Organic Lighting* (*SOLED*), OSA Topical Meeting, 3 – 7 November 2013, Marriott Tucson Star Pass, Tucson, Arizona, USA (November 2013)
- Co-Chair, OPTIC International Conference, Chung Li, Taiwan, National Central University, December 5 – 7, 2013 (December 2013)
- Program Committee Member of conference entitled: "Light-Emitting Diodes: Materials, Devices, and Applications for Solid-State Lighting XVII" *SPIE Photonics West* 2013, San Francisco, California, 1 – 8 February (2014)
- Publication Committee Member, *5th International Conference on White LEDs and Solid-State Lighting* (White LEDs), Jeju Island, Korea, May 25 – 28, 2014 (May 2014)
- Sub-Committee Chair of Track 6: Displays, Solid-State Lighting, Photovoltaics, and Energy-Efficient Photonics of *Asia Communications and Photonics Conference 2014* (ACP 2014). ACP is the largest and the most influential conference in Asia and Pacific Rim for communications and photonics technologies. ACP 2014, Shanghai International Convention Center, Shanghai, China, November 11 – 14 (2014)
- International Consultant of technical seminar of the 11th China International Forum on Solid-State Lighting (SSL-China 2014) Guangzhou, China, November 6 – 8 (2014)
- Member of the International Advisory Committee of the 11th International Symposium on Semiconductor Light Emitting Devices (ISSLED 2017) held in Banff, Canada on October 8 – 13 (2017)
- Assisting the US Judicial Government Branch (various US District Courts), the USPTO (US Patent and Trademark Office) and the ITC (International Trade Commission) by serving as an independent Technical Expert Witness (1997 to present)

Books

- ***Doping in III-V semiconductors*** (author) Hardback and paperback, 628 pages (Cambridge University Press, Cambridge, UK, 1993). The following excerpt is from a book review by D. L. Miller, *University of Pennsylvania*, University Park PA, which appeared in *Physics Today*, Oct. 1994, p. 71: "[...] Fred Schubert has written a book that very nicely fills two roles: It serves as a reference volume for those of us who use III-V materials, and it provides enlightening explanations of interesting and important problems in semiconductor physics. [...] Schubert, who is employed by AT&T Bell Laboratories, brings his extensive research involvement with III-V materials physics straight to this book. His lucid explanations of some of the important physics of doped semiconductors is a major strength. For example, the chapter on deep centers provides the clearest treatment of the DX center I can remember reading, and it uses the large lattice distortion model and configurational coordinates introduced for the DX center to describe the EL2 deep level. This book can also serve as an excellent reference volume, because it briefly describes epitaxial growth techniques and the doping methods used with them, catalogs dopant-related phenomena, describes characterization techniques and provides 45 pages of citations to published articles and books. [...] I will use it to help my graduate students in the physics of semiconductors. [...] It will certainly be available on my bookshelf, in part to remind me what the Burstein-Moss shift is and in part for the literally hundreds of references that it provides on nearly every topic related to III-V semiconductor doping. Because of its clarity in treating some interesting phenomena of modern semiconductor physics, you too might want to get a copy of this book, even if you believe that Ga and As are just poor alternatives for doping silicon"
- ***Delta doping in semiconductors*** (editor) Hardback and paperback, 616 pages (Cambridge University Press, Cambridge, U. K., 1996)
- ***Light-emitting diodes*** (author) Hardback and paperback, 328 pages (Cambridge University Press, Cambridge, UK, 2003). The following excerpt is from a book review by David Bour, *Agilent Laboratories*, Palo Alto CA, which appeared in *Physics Today*, Nov. 2004, p. 66: "[...] In "*Light-emitting diodes*", E. Fred Schubert provides an excellent review of the physics and technology of semiconductor LEDs. […] Interesting anecdotes like [the first demonstration of electroluminescence], clearly written by someone with a broad perspective and expertise, appear throughout the book, making it enjoyable to read. […] Schubert provides an excellent description of the undesirable [non-radiative] recombination pathway. […] Schubert has made pioneering contributions to those devices, and this variety of LEDs may become more widely used in the future. […] Overall, "*Light-emitting diodes*" is an excellent examination of the physics and technology of semiconductor LEDs. The narration is simple and direct, and the book is well referenced for those seeking a deeper understanding of the topic. Written for the graduate level, the text will appeal to a broad audience; and for specialists who make semiconductor LEDs and laser diodes, it will serve as a useful connection to the scientific literature."
- ***Light-emitting diodes, second edition*** (author) Hardback, 422 pages (Cambridge University Press, Cambridge, UK, 2006)
- ***Physical Foundations of Solid-State Devices*** (author) eBook, 275 pages, ISBN-13: 978-0-9863826-2-8 (Google Books, Mountain View CA, 2015)

GF Exhibit 1022 - 133/175

- ***Light-emitting diodes, 3rd edition*** (author) eBook, 672 pages with hundreds of colored illustrations, ISBN: 978-0-9 863826-6-6 (Google Books, Mountain View CA, 2018) "The 1st edition of the book "Light-Emitting Diodes" was published in 2003. The 2nd edition was published in 2006. The current 3rd edition of the book is a substantial expansion of the second edition and has 37 chapters. The book includes a thorough discussion of white light-emitting diodes (LEDs), phosphor materials used in white LEDs, packaging technology, and the various efficiencies and efficacies encountered in the context of LEDs. The background of light, color science, and human vision is provided as well. The fully colored illustrations of the 3rd edition are undoubtedly beneficial given the prominent role of light and color in the field of LEDs. The book is a comprehensive discussion of the LED, particularly its semiconductor physics, electrical, optical, material science, thermal, mechanical, and chemical foundations. The 3rd edition is published in electronic format in order to make the book affordable and easily accessible to a wide readership."

Courses and laboratories developed at Boston University

- Developed first laboratory for "Physics of semiconductor devices" (SC-471) Fall (1998)
- Developed course "Quantum mechanics applied to semiconductor devices" (SC-574) Fall (1999)
- Developed course "Semiconductor light emitters" (SC-760) Fall (2000)
- Developed distance-learning course and NTU course on "Light-emitting diodes – Device physics and applications" Fall (2000)

Courses taught at Boston University

- Undergraduate Course "Physics of semiconductor devices" (SC-471)
- Graduate course "Fiber optic communication systems" (SC-563)
- Graduate course "Quantum mechanics applied to semiconductor devices" (SC-574)
- Graduate course "Introduction to solid-state physics of devices" (SC-577)
- Graduate course "Quantum electronics" (SC-700)
- Graduate course "Integrated optoelectronics" (SC-770)
- Graduate course "Compound semiconductor devices" (SC-771)
- Graduate course "Light-emitting diodes" (SC-760)
- Graduate course "Research seminar" (SC-860, SC-892)
- Other courses "Research", "Guided Study", "Master Thesis", and "Dissertation" (SC-900)

Courses taught at Rensselaer Polytechnic Institute

- Graduate Course "Semiconductor devices and models II" (ECSE-6290)
- Undergraduate course "Microelectronics technology" (ECSE-2210)
- Undergraduate course "Fields and Waves 1" (ECSE-2100)
- Graduate course "Quantum mechanics applied to semiconductor devices" (ECSE-6968)
- Graduate course "Physical foundations of solid-state devices" (SC-6960)
- Graduate course "Light-emitting diodes and solid-state lighting" (SC-6961)
- Undergraduate course "Introduction to Electronics" (ECSE-2050)
- Other courses "Research", "Guided Study", "Master Thesis", and "Dissertation"

Teaching evaluations and students' comments

1997 – Students made the following comments: "Clear … organized … excellent explanations … I've never had a professor like him – I wish all were like him … very clear and concise presentations … strong response to students' questions and concerns … Professor provided excellent notes … laid out lectures in a clear and precise manner which worked out wonderfully … well organized and confident … responsive to students' concerns … excellent for students going into the semiconductor industry … excellent hand-outs and course materials … well prepared … clear lectures … I was strongly encouraged … materials are very interesting … hand-outs were excellent … material is very important … the presentation of materials was very clear … hand-outs were excellent support to the class … efforts made by Prof. Schubert in keeping everyone at the same pace was remarkable …"

1998 – Students made the following comments: "Professor was always well prepared … excellent content … very relevant for the field of solid-state devices … excellent preparation for the class … handouts were very good … very well-organized teacher … excellent knowledge of material … provided a complete background of all material … easy to talk to … excellent overall teaching skills … really enjoyed coming to class … his choice of topics and homework helped me a lot … enthusiastic in teaching and helpful during the office hours … one of the best professors I have had at BU … course gave a very good overview of the different solid-state physics principles … the course was very well organized … relevant examples and homework were given … good explanations were

GF Exhibit 1022 - 134/175

given … presented clearly … presentation was clear … communicated effectively … very knowledgeable … good demonstrations in class … gives clear descriptions … asks questions of class … grades homework fairly … good at answering questions … no weak points … excellent instructor and scientist … inspiring professor … thorough … the instructor is very precise and well prepared … his knowledge of the material is exact … very responsive to feedback … encourages student questions, class participation and discussion … the instructor cared about whether students understood material … the instructor used applications immediately after showing theory … handouts were excellent … guest lecture and lab tour excellent idea … excellent class notes … presented topics neatly … well prepared … review of ongoing research topics was great … Professor Schubert is undoubtedly an expert in his area …"

1999 – Students made the following comments: "He enjoyed teaching the material and was very clear … the presentation of the material in class was excellent … he helped me to understand a lot about semiconductors … Prof. Schubert always tried to make sure that we would all have a clear understanding of the material … manuscripts were very helpful … encouraged lots of class participation and was always readily available for help … presentation was excellent … the instructor was always willing to help me … very helpful … Clearly, Prof. Schubert is *more* than just extremely knowledgeable about this material … very thorough and exact communication of points … excellent course packet written by the instructor … he was very well prepared for class … He is extremely fair and encourages participation … he is also very accessible … excellent instructor … very approachable and easy to ask questions of … handouts were very effective and helpful … Prof. Schubert is very prepared and concepts are well explained … materials will be very useful for my future … very open to questions"

2000 – Students made the following comments: "He did a lot of experiments which really helped … the material is very interesting and cutting edge … clear presentations … good in-class demonstrations … very clear lectures … the material really does challenge you … takes the time to answer your questions … very interesting material … relevant to today's world of communication … the field trip was fun … in-class demonstrations really added to class … good understanding of course material … excellent details, willing to help, good explanations … in-depth details on quantum mechanics … the instructor was extremely accessible to students … he encouraged participation in class … he gave intuitive arguments and explained concepts in a very physical way … I very much enjoyed Professor Schubert and would like to take more classes with him … material was very beautiful … I *very much* enjoyed the papers that were discussed … everything is well organized … hand-out material is very complete and clear … lectures are clear … the professor prepared an excellent manuscript … explained things very clearly … he has strong enthusiasm to solve students' questions … it's a very important course … Professor follows the course notes exactly, so one can concentrate on material without having to focus on details … clearly presented material … the course is great preparation for future courses in solid-state physics … I greatly admire Professor Schubert …"

2001 – Students made the following comments: "He has a thorough understanding of the subject … I like the fact that he shows us examples in class demonstrations … the manuscript was good … instructor provides good notes … materials are presented clearly … in this course you learn a lot … very illustrative and in depth … very interesting course … Professor presented the material well … Professor seemed to have a strong grasp on what he was teaching … the basics were presented correctly … smooth transition into more complex materials … presented basics well … Professor's strong points are knowledge, organization and class materials … clear conception … very important and useful class … Professor knew what was going on … manuscript and his notes were very helpful … responded to suggestions … notes were comprehensive … just fine … manuscript was good … knows the material very well … notes handed out are good … expert knowledge of material … developed lectures logically and straightforward … lecture notes were prepared for us - very nice touch … Professor has deep knowledge of the materials … Professor is always prepared for lectures … he emphasizes principles and the concepts … good preparation … good stuff and clear presentation … good research and industry experience … excellent handout notes and materials … excellent teaching skills … inspires the interest of students … great knowledge of material … well organized course notes … Professor Schubert gave very clear instructions … listening to his presentation is a true enjoyment of an excellent art of lecture style … the manuscript has the quality of an excellent book … the manuscript was an excellent reference source book … the instructor was very clear and well organized and encouraged participation … text [written by Schubert] was extremely good … expert knowledge of materials … class demonstrations were very beneficial … can clearly relate complex ideas – very good … has a high amount of patience … excellent understanding of material … very enthusiastic in teaching … always available for discussion … very knowledgeable … I don't see any weak points … he explains the theory very clearly …"

2002 – Students made the following comments: "Always prepared … presented difficult material in a manner that was easy to understand … presented everything neatly … very helpful and organized … presents subjects in a very easy and friendly format … very well qualified … great experience … very detailed notes … well organized … very useful … very good diagrams and explanations … he knows the material extremely well … notes given to us

are extremely helpful … professor was very knowledgeable … was able to answer any of our questions … very informative course … very knowledgeable and a great teacher … the instructor is enthusiastic to teach students … the instructor can explain the theory very clearly …"

2003 – Students made the following comments: "Great overall knowledge … good organization skills … demonstrations were very interesting and useful … effective instructor … handouts were extremely useful and organized … good course for completely understanding many points of fiber optics …"

2004 – SPIE short course: "Encouraged questions and handled them well … excellent short course … I really appreciated and enjoyed this course … good course – covered very broad matters … the instructor was very knowledgeable on the topic … excellent! …"; RPI Semiconductor devices and models II (ECSE 6290): Overall excellence of teacher: 4.8 out of 5.0. Student comments: "course was very well prepared … [course] was very organized … this is an excellent course … I learned a lot from this course … the course was very good … thanks Prof. Schubert for a wonderful course … it's been a great course … thank you …" RPI Microelectronics Technology (ECSE 2210): Overall excellence of teacher: 4.7 (average 4.2). Overall excellence of course: 4.3 (average 3.9). Student comments: "Understandable presentation … great job [of] Prof. Schubert … very nicely done class … very helpful throughout the entire course … provided timely explanations to complicated material … very informative … course was fun and interesting … very interesting lecturer … very down to earth and easy to ask for help … [instructor] did a good job in presenting [material] … good course … fun course … excellent instructor … he is a great guy and very knowledgeable … I would definitely take a class from him again" **Book review** by Neal Oldham (San Jose, CA, USA) on "Doping in III–V semiconductors" (E. F. Schubert, Cambridge University Press, Cambridge UK, 1993) on amazon.com (May 17, 2002): "[This is the] best book I've encountered in the semiconductor field. This is, no question, the best book that I've encountered in the entire field of semiconductor physics. It is expertly organized and indexed, easy to follow, complete in its treatment of electrical and materials-science aspects of III-V semiconductor production and measurement, well-written ... worth every penny if you even have the most remote interest in the subject." **Book review** by Debdeep Jena (Santa Barbara, CA, United States) on "Doping in III–V semiconductors" (E. F. Schubert, Cambridge University Press, Cambridge UK, 1993) on amazon.com (July 6, 2001): "Very useful text for semiconductor crystal growers. Doping is a big, big issue in semiconductors; this text does appreciable justice in its treatment of the issue. In addition, Schubert treats heterostructure physics appreciably well (in fact better than many textbooks on semiconductor physics!). Perusal of this book has proved very rewarding for me, and I expect it will do the same wonder for you too."

2005 – SPIE Photonics West short course student comments: "Very good instructor! … very knowledgeable … clear on complex subjects … good job fielding questions … (numerical score 4.3 out of 5.0). Educational materials on the web: … I have greatly enjoyed your LED slideshow. CLEO short course: … very good and well-organized course!" ECSE 6968: "Class presentations were very helpful in learning … very useful in learning *the details* of fundamental concepts … the course is very good … the course is excellent for engineers … your […] treatment brought about a much better understanding … examples were great and helpful … [discussion of] history and photons […] helped increase interest … After your course now, I can actually approach a quantum mechanics text book without fear … overall, I just wanted to say – *thank you* … excellent course … the instructor made it interesting and taught very effectively … the manuscript provided was also very well written … class was excellently structured … will benefit my studies in the future … especially liked the term paper requirement … Prof. Schubert is an excellent instructor, who is well prepared …" (excellence of instructor: 4.8 out of 5.0). SPIE Photonics North short course: "Very good and clear in presentation …" (numerical score 4.4 out of 5.0). ECSE 6960 mid-course and final feedback by students: "Professor has provided all course materials … I really appreciate it … well presented … technical support was great … my learning experience has been good … responses to my homework questions have been very timely … I have enjoyed the course and found it interesting and useful … homework assignments have been extremely beneficial … the set of notes is very comprehensive … good class structure …" (numerical scores of students' course and instructor evaluation: 5.0 out of 5.0). Comment on web educational materials: "Notes look very thorough and clear …"

2006 – SPIE Photonics West short course student feedback: "Excellent, knowledgeable … excellent presentation …" (numerical score 3.91 out of 5.0). ECSE 6961 (Light-emitting diodes and solid-state lighting): "excellent … Informative, comprehensive and interesting … the best part of this course, in terms of my learning experience, has been the course materials … just an outstanding class … so much is newly discovered and so much is current on-going research and commercially relevant … Dr. Schubert is obviously a leading researcher and did a great job of conveying his experience and understanding to the class … a highly technical topic that still makes a good general conversational topic … I liked the course material … I liked the fact that Prof. Schubert lectured directly from the textbook … I liked the structure of the course … I learned a lot about lasers and LEDs and other optical devices … it is a basic and fundamental class … the instructor gives ideas, concepts, and samples very clearly … very good course … students interested in LEDs and solid-state lighting are strongly recommended to take it … liked the overall coverage … the teaching pace was good … he covered a lot of material that is

GF Exhibit 1022 - 136/175

important for the subject, but it was clearly always related to the topic … the manuscript that he let us use was excellent in my opinion … the most important thing I liked about the course was the course material and the structure of the course … right amount of homework and the two exams and the term paper presentation … it was great to learn this course from someone who is a world leader in this field … well-organized material … liked the course format … organization was good … allowed me to know exactly what we were covering so I could look through the material prior to the lecture … course content was good, starting with LED basics and covering materials through modern technologies, and then a look at solid-state lighting and sort of an intro to communication devices … good fundamentals in LEDs … GREAT Professor … awesome course … informative course … ability to view course materials online was helpful … very fruitful course … covering a lot of materials … very good and very important for graduate students to take this one … for people in industry it's also useful … for the instructor, this course is thought through very clearly … the text book is also very good … great course … excellent instructor … cute instructor … course is very good … I benefited a lot from it …" (numerical scores: 4.7 out of 5.0). ECSE 2210 (Microelectronics Technology) student comments "Excellent teaching method … I like that the Professor asks random questions at the end of class – it helped me understand the subject better … I thought Prof. Schubert was fabulous … his organization of the class encouraged learning … I highly recommend this class to everyone … a devoted and involved teacher … displayed more enthusiasm in teaching than other Professors I had … he also seemed to have a philosophy about teaching that was beyond helping students get good grades … he emphasized real-world applications of material and had general advice about working in the real world after leaving academia … helpful … although he was harder in grading and exams, Prof. Schubert challenged us more and made the course more interesting … the many class activities provide lots of practice of materials just learned … provided good back-up information … made sure students understand concepts …thank you for asking students questions during class to reinforce concepts … thank you for allowing open book exams …" (numerical scores: excellence of teacher 4.4 out of 5.0; excellence of course 4.3 out of 5.0; overall average of ratings 4.4 out of 5.0)

2007 – Book review by Steven J. Wojtczuk (Lexington, MA, USA) on "Light-Emitting Diodes" (E.F. Schubert, Cambridge University Press, Cambridge UK, 2003) on amazon.com (March 14, 2006): "Schubert (RPI) has written an excellent book on LEDs that manages to explain and derive simple quantitative models for many phenomena of current interest … many monographs are a compendium of results in the field with hundreds of references … in contrast, Schubert, while giving copious references, is the sole author, leading to a coherent presentation well suited to learning … there are plentiful and good figures and drawings, as well as many exercises and solutions integrated into the text …" SPIE photonics West Short Course: "Excellent talk …" ECSE 2210 (Microelectronics Technology) "Thank you … great course … excellent instructor … interesting course … appreciated that you did not lecture completely from the slides and that you probed the class to ensure that we were understanding the key points … course is fine … good professor … Professor Schubert is one of the best lecturers I had … the pace at which he moves the topic, the way he explains things, and the manner in which he asks students questions all came together to help me learn much more form his lectures than I could on my own … instructors are absolutely very intelligent … Professor Schubert was a good professor … I actually learned things when Professor Schubert taught …" ECSE 6968 (Physical Foundations of Solid-State Devices) "The instructor explained every concept in a very simple and effective manner … I really enjoyed taking this course …" (numerical scores: 4.5 out of 5.0)

2008 – SPIE Photonics West short course feedback: "Very good … clear … very nice … answered questions readily …" (numerical score 4.3 out of 5.0) … ECSE 6961 (Light-emitting diodes and solid-state lighting) feedback: "It was great for me to have the opportunities to take two consecutive classes, *Physical Foundation* and *LEDs*, from you … both these classes have taught me a lot … they were very well organized … thank you for all the help … I have really enjoyed your classes … relevant material … very good professor …" (numerical scores: 4.3 out of 5.0) … Internet educational materials feedback: "I recently came across your course notes while trying to get a basic understanding about semiconductors and I wanted to thank you. Your notes for course "ECSE-2210 Microelectronics Technology" are the most useful and informative thing I have found on semiconductors on the Internet. I'm a chemist by trade and this is a great introduction for me …" 2007 Chautauqua Short Course and High School Teacher Summer Course, held at RPI June 26 and July 12, 2007 (numerical average of scores: 9 out of 10) … ECSE 6968 (Physical Foundations of Solid-State Devices) feedback: "Prof. Schubert is one of the best professors I've ever had … his ability to explain difficult and complex materials in a clear and concise manner is unmatched … the presentations, although time consuming, I felt were a great idea … thanks for your efforts professor! … I have really enjoyed taking this course …" By email: "Thank you professor … it has been a pleasure taking this course with you …" (numerical scores: 4.4 out of 5.0)

2009 – SPIE Photonics West short course feedback by students: "One of the best short courses I have taken … it was very nice to hear about the history of LEDs … very interesting but also very theoretical …" (numerical score 4.1 out of 5.0). ECSE 2210 (Microelectronics Technology) "Great course … instructors were excellent … encourages students to stay up to date with the subject matter … Thanks for this well-organized class … [the instructor] tries

to get students to come out with the best grade possible … this was a good class …" ECSE 6968 (Physical Foundations of Solid-State Devices) feedback by students: "It is really an excellent course … clear hand script … great professor! …" (numerical scores: 4.7 out of 5.0)

2010 – SPIE Photonics West short course feedback by students: "Good to get the latest data and charts … very good … very broad course and well organized … it was great …" (numerical score 4.04 out of 5.0) … ECSE 6961 (Light-emitting diodes and solid-state lighting) feedback by students: "A good course … this was a wonderful course … it has given me a lot of understanding … the course has inspired me to take up LED research … useful … straight forward … very good advisor … good course …" (numerical scores: 4.3 out of 5.0) … ECSE 6220 (Physical Foundations of Solid-State Devices) feedback by students: "Overall excellent course … Professor Schubert is a good teacher … he can explain every discipline very clearly and relate them to practical applications … I like his teaching style very much … overall, it was a nice course … material explained in a clear organized manner …" (numerical scores: 4.7 out of 5.0)

2011 – SPIE Photonics West short course feedback: "Very nice overview … the instructor was excellent! … very good instructor … I would recommend lengthening to 6 hours … excellent presentation, materials and text … thanks … very clear and easy to follow … to be recommended … excellent presentation … good compromise for a person with a busy schedule …" (numerical score 4.45 out of 5.0); … ECSE 2210 (Microelectronics Technology) "This was a great course … I enjoyed Professor Schubert's views … I was successful … this course was taught very well … this subject I now find quite interesting and am no longer intimidated by it … I liked the material of this course … thank you …" (numerical scores: 3.3 out of 5.0); Feedback on book *Light-Emitting Diodes*: "I am a graduate student from National Chiao Tung University, Taiwan … your wonderful book *Light-Emitting Diodes*, both first- and second-edition, gave me a lot of information and help … I would like to ask when can the third of the masterpiece be published? I wish I can get it as soon as possible and study more about the lighting devices; Feedback on Internet pages: I found your website and information […] quite enlightening and provides a great start … I simply wish to quickly express my thanks and gratitude." Feedback on book *Physical Foundations of Solid-State Devices*: "Dear Prof. Schubert, I have read your book Physical Foundations of Solid-State Devices and I must say it is amazing the explanations are really good and I am most thankful that you have decided to put the book online thank you." Itamar Jade Balla, The Israel Institute Of Technology. Feedback on book *Light-Emitting Diodes* by Trung Nguyen (San Jose, California): "It is a good book about Light Emitting Diodes (LEDs). It provides very good info and it is a good reference for engineers who work in the LED field"; … ECSE 6220 (Physical Foundations of Solid-State Devices) feedback: "Amazing course … great instructor … very good course … The text and lectures were very useful and informative … I definitely learned a lot from taking this course … I liked the course materials! …" (numerical scores: 4.6 out of 5.0)

2012 – Feedback on Internet-based materials: "I'm Cheng Liu [Wuhan National Laboratory for Optoelectronics, China], currently a graduate student majoring in Physical Electronics … I deeply admire your profound knowledge on this field and your unselfish sharing of it …"; … SPIE Photonics West short course feedback: "Dr. Schubert was very clear and very patient with people who had questions … the materials were comprehensive …"; Feedback on Internet-based materials: "Supremely-rich course contents posted on your website. Thank you very much for showing such awesome materials for the world to see …" (Prof. Natee Tangtrakarn, Thailand) … ECSE 6962 (Light-Emitting Diodes and Solid-State Lighting) feedback: "… very interesting course … Professor Schubert did a great job explaining the material … his textbook is very clear and understandable … nice course … I learned a lot of new things by taking it …" (numerical scores: 4.7 out of 5.0)

2013 – ***SPIE Photonics West short course*** feedback (SC-052, Light-Emitting Diodes): "Great instructor with admirable combination of knowledge in academic and commercial knowledge … I appreciated the depth of his knowledge and experience … the length of the course was good … Overall this was an excellent course … Thank you … course is very easy and I understand it easily … Excellent course! … Instructor was fantastic -- clear, explicit, took questions as we went and answered well … One of the best SPIE courses I've taken (and I've taken lots)! … Great course -- thanks! … I was happy that the slides were updated with 2012 data". ***RPI course numerical scores (ECSE-6962, Light-Emitting Diodes and Solid-State Lighting)***: Numerical score of students' evaluations: 4.67 out of 5.0; Verbatim comments: "The course is pretty good … needs no improvement … I can appreciate the more wide-angle approach from the course … These areas are very important and previously I had no knowledge of them … It was a pleasure attending your class …" ***RPI course numerical scores (ECSE-6968, Physical Foundations of Solid-State Devices)***; Verbatim comments: "It has been an awesome experience of learning for me in this course … Thank you for everything … Thank you for the great semester … Have a good break … Thank you for the great semester … Have a good break … Professor, thank you for an engaging and interesting class this semester … I enjoyed the subject of my paper and learned quite a bit particularly about GaN, which I had not had a chance to really do any research into before … Very good and interactive class … I liked the style of the class … I thought the topics covered were very interesting … I think I got much more out of the class this way than if we would have followed the manuscript chapter by chapter …" Numerical score of students' evaluations: 4.83 out of 5.0

GF Exhibit 1022 - 138/175

2014 – *SPIE Photonics West short course* verbatim feedback (SC-052, Light-Emitting Diodes): "Very knowledgeable instructor ... the course was packed with information ... handouts are excellent ... Excellent presentation and contents ... the color rendering section which was interesting and fun ..." Numerical score of students' evaluations: 4.36 out of 5.0; ***RPI Course ECSE-2210 Microelectronics Technology***; Verbatim comments: "Instructor is clearly very knowledgeable about the topics ... Very clear and comprehensive ... This is the best class ever ... I'm quite enjoying this course ... I don't really have any recommendations on things to change ... The homework and lectures being sent out at the beginning was very helpful ... Both the TA and the professor were able to explain things very well ... I think he is a good lecturer ... I think the homework each was very, very good at teaching me the material, and the exam was fairly graded and easy to understand ... I definitely like the professor and I would have him again ... A good class ... I enjoyed Prof. Schubert's style of teaching ... I would still recommend Prof. Schubert as a professor ... Microelectronics is a good class ... Prof. Schubert keeps it interesting though ... he's a great professor ... The two TAs are also great ..." Numerical score of students' evaluations of instructor: 4.25 out of 5.0. ***RPI Course ECSE-6220 Physical Foundations of Solid-State Devices***; Verbatim comments: "The book and lectures seem to be entirely in sync with one another ... it really enforces the material covered in the book ... the material is covered thoroughly and improves students' understanding of quantum physics ... The class was interesting with excellent learning materials ... I loved how the course was so well organized ... The lectures were very well put together ..." Numerical score of students' evaluations of instructor: 4.75 out of 5.0.

2015 – ***SPIE Photonics West Short Course SC-052 titled Light Emitting Diodes***, Verbatim comments: "I was very satisfied with this short course" Numerical score of students' evaluations: 4.53 out of 5.0; ***RPI Course ECSE-6960 Light-Emitting Diodes***; Verbatim comments: "the class has been excellent! ... I've learned a good amount about LEDs ... Also I'd like to thank you for a great semester and say that you've peaked my interest in the LED field! ... I would like to add that the course was an excellent experience for me and that I really enjoyed learning about LED technology! ... Thank you very much for teaching such a wonderful class ... It was a great learning course" Numerical score of students' evaluations: 5.0 out of 5.0. ***RPI Course ECSE-2100 Fields and Waves 1***; Verbatim comments: "This class is going perfectly and I love the way it's run ... The material is great and understandable ... the pace is perfect ... I like the pacing of the course and the fact that we spend time really developing an understanding of the theory and concepts that we will be using ... I like the Professor ... The lectures are great ... I really enjoy this professor and he is very understanding of the students' levels of learning and focused on that ... Professor Schubert is clear and easy to understand ... Overall a very good professor ... very knowledgeable and helpful ... I thought the professor was very knowledgeable and was an excellent instructor ..." Numerical score of students' evaluations of instructor: 4.17 out of 5.0.

2016 – ***SPIE Photonics West Short Course SC-052 titled Light Emitting Diodes***, Verbatim comments: "This has been my favorite course (over 3 years) ... Well-structured presentation, and well given ... I was surprised by how much I didn't know. I learned a lot ... Explained difficult concepts in a clear and simple manner ... Able to go "off script" to clarify during questions." Numerical score of students' evaluations: 4.56 out of 5.0; ***RPI Course ECSE-2100 Fields and Waves 1***; Verbatim comments: "This is cool material ... This class was one of the most well put together I have ever taken in terms of lecture pace, lecture clarity, TA support, and quality of teaching and communication ... The lectures never felt too long or too short, the pace was good, I never felt lost or without an option to turn for help ... The homework was neither too long nor too short, and was well balanced with conceptual and quantitative questions ... Prof. Schubert's lecture style was very clear, concise, and to the point, with many useful examples in real life scenarios which made the material more interesting ... Very well done ... Great class ... I liked the pace of the class ... it helps with understanding the material a lot ... The labs [...] were fun and very educational ... Overall, I learned a lot from this course ... The speed of the class is perfect ... I really got a chance to learn ... This professor is very good ... Also, [in] the lab section I was able to really break down what I learned in class ... Schubert has the neatest handwriting of any professor I've ever had in my 3 years here ... His diagrams are extremely neat and he is easy to understand verbally too ... Lots of conceptual knowledge covered ... Overall [...] it was an enjoyable class ..." Numerical score of students' evaluations: 5.0 out of 5.0. ***RPI Course ECSE-2210 Microelectronics Technology***; Verbatim comments: "So far, this has been one of my favorite courses at RPI … I'm a huge fan of Prof. Schubert's ability to clearly describe concepts both conceptually and mathematically … Class activities […] were really helpful! … Otherwise the class is great! … Prof Schubert knows his stuff … Best professor I have had … This course was well taught … Professor Schubert's explanations were very clear and understandable … he took time to address student questions with in-depth answers … I feel as though I gained a lot from this course, especially with regards to explanations of why certain things in ECSE-2050 (Intro to Electronics) occur the way they do like where the diode property comes from and how material properties of electronic components give rise to the very real circuit characteristics we see in ECSE-2050 labs … In this sense, Microelectronics Tech is a very good companion class to Intro to Electronics, and I highly recommend future students take them at the same time … this was a quite good class … Best MET instructor … I was so actively engaged during the lectures that it was kind of scary ... The lecture notes and lectures were mostly great … The material covered in it was succinct and interesting,

yet still covered the knowledge needed to tackle engineering problems in semiconductors …" Numerical score of students' evaluations: 4.64 out of 5.0.

2017 – ***RPI Course ECSE-2100 Fields and Waves 1***; Verbatim comments: "I thoroughly enjoy this class … Schubert is awesome! … Enjoyed the class … He is a good teacher … Most teachers talk really fast making it hard to follow … Schubert talks slow and explains things really well … Professor Schubert is an excellent professor, and has been one of my favorites at RPI so far … He made a difficult topic approachable, interesting and understandable … I hope I have him as a professor in the future … Thank you … I enjoyed this class, especially the labs … Lectures were good too … great class! … The professor does a great job of engaging the students by asking questions and making students ask questions to make them think about the labs … This course is overall excellent in that the professor does know the pace of class and gives feedback appropriately …"; Numerical score of students' evaluations: 4.63 out of 5.0. ***SPIE Photonics West Short Course SC-052 titled Light Emitting Diodes***, Verbatim comments: "the course covered a wide variety of concepts …" Numerical score of students' evaluations: 4.03 out of 5.0.

2018 – ***RPI Course ECSE-2100 Fields and Waves 1***; Verbatim comments: "Professor Schubert is great and very entertaining to listen to in the lab and in lecture … Really appreciate how Prof. Schubert structures lectures … Schubert is great! … The professor is excellent at relaying concepts … This course is very interesting and it goes at a good pace … One of the better professors here at RPI … He cares about his students and helps them to learn the most through lectures and labs … Fantastic course that goes into great detail into not only knowing the material but also understanding the material … [the course] has been clarified and allowed for a greater learning process." Numerical score of students' evaluations of instructor: 4.17 out of 5.0. ***RPI Course ECSE-6220 Physical Foundations of Solid-State Devices***; Verbatim comments: "Perfect professor, no complaints." Numerical score of students' evaluations (median): 5.0 out of 5.0.

2019 – ***RPI Course ECSE-2100 Fields and Waves 1***; Verbatim comments by students: "Schubert is excellent in relating information in a practical manner especially in the lab … Overall, both the professor and TAs prioritize if students understand material over semantics in reports and homework, which is really helping me in the course, and feedback given is incredibly helpful in both … Schubert is a mystery. He speaks very slowly and clearly, but you somehow learn everything at a very fast rate … Class […] being just the right amount focused and adequately paced … Overall great class … Labs were educational and we were allowed to have fun with it … Otherwise great lectures, notes were available and understandable … this was one of my favorite classes … Very well run by Schubert … lectures were informative and easy … labs were fun … The TA's were allowed to have personalities and interact with the students … 10/10 would take again … Schubert was okay … The best parts about the course for me were everything was online and I could copy the notes at my leisure with my busy schedule … I also liked that exams were open book and we had a lot of opportunities for practice … I have nothing but good things to say about both TAs and Professor Schubert – this has been my favorite class this semester … Though challenging, I have found the course material very interesting and all teachers have been excellent … Course was good … I like Professor Schubert's class notes online. They're super well written and helpful." Numerical score of students' evaluations of instructor: 4.63 out of 5.0 (average) and 5.0 out of 5.0 (median).

2019 – ***RPI Course ECSE-6280 Light Emitting Diodes***; Verbatim comments by students: "This was a great course … I learned a lot during the semester … Great class … I really enjoyed Professor Schubert's expertise on the subject … Gives both in-depth technical knowledge as well as high level background to better understand the driving factors of the LED industry … I would highly recommend it to anyone in ECSE." Numerical score of students' evaluations: 4.83 out of 5.0 (average) 5.0 out of 5.0 (median).

2020 – ***RPI Course ECSE-2100 Fields and Waves 1***; Verbatim comments by students: "I really enjoyed this class … the cool labs with good help and good lectures made me really enjoy this class and help the information stick in my head better … The labs provided a great use to show theory in practice and how certain concepts are applied to real-life applications … The laboratory session was also a great time to ask questions and have in-depth talks about the material … I would have already commended this professor for class organization and material availability prior to online courses (course material easily available, organized well, and easy to understand; interactive lectures; interactive labs better than most other ECSE courses), Prof. Schubert handled the change to online coursework best of all of my professors and maintained the quality of lecture almost perfectly … The 'live' online classes were interactive and courteous by students and the professor, organized, and just as in-depth as before, even including miniature homemade demonstrations and experiments … The course was taught very fundamentally which allowed me to think and learn more … Thank you, Professor Schubert … I really missed your live lectures and labs! … Professor Schubert made the best of the situation of online learning … Great class … I learn a lot from this class … I enjoy lab sessions and try never to miss any class … Prof. Schubert is really good!" Numerical score of students' evaluations: 4.75 out of 5.0 (average) 5.0 out of 5.0 (median).

2020 – ***RPI Course ECSE-2050 Introduction to Electronics***; Verbatim comments by students: "I really enjoyed how easy it was to follow along with the lecture … I really enjoyed the content of this course, and I feel that the

applications of this content in the lab were extremely effective to help students understand the content … the concepts in general were extremely interesting … I liked how the lecture sessions for this class provided much more room for discussion and examples than nearly any other ECSE course I have taken at RPI so far … Schubert was very aware of the students ability to fully comprehend the topic ... He was very patient with the students that needed extra explaining … I learned a lot about the course material … I liked the one-on-one attention we received in the in-person lab … I enjoyed the in person laboratory sessions, they were a good place to get all my questions answered … I really like the lecture notes and the detailed diagrams / graphs that help explain the concepts … Professor Schubert does a great job of breaking down the material, he always tries to engage the students in every lecture … Very clear notes, responded quickly, answered any confusing questions really well, and very nice and accommodating towards the current COVID situation everyone is going through … He had very organized notes that helped especially with the difficulties of online learning … I loved the explanation of diodes, it's never been so clear to me before! … Examples were excellent … The course was great! … I learned a lot and this course stimulated my interest … Very engaging … stimulates participation … Professor Schubert was a refreshing exception … the professor was very knowledgeable in the subject area … explanations were clear and easy to understand … I really like the format of this class compared to my other classes … I really enjoyed the format … Very detailed lecture, very helpful with students, made very complex material easy to understand … Prof is really understanding and cares about his students … He is really willing to work with us which I found is really rare at RPI ... He is easily one of the best professors I have had … He cares most about whether we are learning and understanding, rather than following his desired schedule perfectly ... Cannot say anything bad about Prof Schubert … Class is great" Overall instructor rating: 4 out of 5. Overall course rating: 4 out of 5.

2021 – ***RPI Course ECSE-2050 Introduction to Electronics***; Verbatim comments by students: "Class has been going smoothly … Professor Schubert includes real world-examples of devices in his lectures, showing the importance of our course materials … He is always very considerate of students, trying to adapt to what would help people most … He engages students in lectures." Overall instructor rating: 4.8 out of 5.0. Overall course rating: 4.6 out of 5.0.

2021 – ***RPI Course ECSE-2050 Introduction to Electronics***; Verbatim comments by students: "Professor is always able to conceptually answer our questions, and run through circuit analysis with us if the results we're measuring don't match up … I tried taking this class once before, and I failed it. This time around, I feel like I know everything about everything. I had never imagined just what a difference teaching style could make in my ability to learn information, but this class is so much more welcoming to me this time around. It was with a different professor the first time. I much prefer Professor Schubert and the way he conveys information so effortlessly. He also seems like he's passionate about teaching the information and his handwritten notes are astonishingly detailed … Great professor! I appreciate Professor Schubert taking the time to clarify different topics and always checking in with the students. He seems to genuinely care about our education. He is strict about deadlines, more so than other professors at least, but I think he has earned that … Professor Schubert is very friendly to his students … He was very helpful and one of the few professors who actually stays and talks to students all throughout the lab period. It was very helpful because often I would think that I fully understood a concept and then he would ask a question that would either stump me or reinforce information. Additionally he kept lectures short and to-the-point, which I appreciate." Overall instructor rating: 4.3 out of 5.0. Overall course rating: 4.3 out of 5.0.

2022 – ***RPI Course ECSE-2050 Introduction to Electronics***; Verbatim comments by students: "Great professor! … Handwriting is amazing … His notes are flawless and easy to understand … This course covers much more than most other EE courses I've taken, and yet I feel as though this has been the easiest EE course due to his teaching abilities … Professor Schubert is a very knowledgeable professor … It's clear that he wants his students to learn …" Overall instructor rating: 4.3 out of 5.0. Overall course rating: 4.4 out of 5.0.

2022 – ***RPI Course ECSE-2210 Microelectronics Technology***; Verbatim comments by students: "I think Schubert does a great job of teaching … He makes the pn junctions as interesting as he can … I also love the chalk-board! So great, every professor should be forced to use it, because you can follow the work so smoothly (not like powerpoints) … I would not change the class … I also like how Prof. Schubert asks for feedback from everyone after class … Course was at a great pace and the level of difficulty … Professor Fred Schubert is one of my most favorite professors at RPI … I am sad to see in the course schedule for Spring 2023 that he is not teaching any 4000 level ECSE courses … I think that the department and students are missing out by not having someone as knowledgeable as him teaching more conceptually hard topics because Professor Schubert does that exceptionally … Best ever lecture experience, clear structure of lecture notes, comprehensive homework that helps to improve students' understandings, and always eager to solve students' questions … Thanks for another great course Professor!"

2024 – ***RPI Course ECSE-2050 Introduction to Electronics***; Verbatim comments by students: "… It's great to learn how a component works and learn "Iconic Circuits" that use those components … I really appreciated the

GF Exhibit 1022 - 141/175

Homeworks, they were well thought out and helped me understand the content … I liked the open notes exams, they allowed me to use the notes I took in class and demonstrate how I can apply the concepts we learned in class to a different problem … I appreciated [Professor Schubert] talking to everyone in [the] lab one-on-one … I also liked that he showed interest in all the students and answered our questions promptly and thoroughly … Very nice and understanding professor, one of the best in the ECSE department … Professor Schubert seems to know what he is talking about … Professor Schubert is very nice and during labs walks around and asks students questions making sure we understand the concepts … He also introduced some applications not taught in the previous versions of the course and even added a lecture on class-D amplifiers to attempt to keep the course up with modern technology … The last few lectures left a good impression though and were extremely engaging …"

2024 – ***RPI Course ECSE-2210 Microelectronics Technology***; Verbatim comments by students: "… Professor Schubert is very passionate about his subject and that passion rubs off on his students … The professor was truly excellent and I enjoyed attending his lectures twice a week … He was very good at teaching. …"

Post-doctoral & visiting personnel for which I served as Major Research Advisor

Dr. Li-Wei Tu	Post-Doctoral Fellow	1988–1990
Dr. Neil Hunt	Post-Doctoral Fellow	1991–1993
Dr. Matthias Passlack	Post-Doctoral Fellow	1993–1995
Dr. Wolf Grieshaber	Post-Doctoral Fellow	1995–1997
Dr. Thomas Gessmann	Post-Doctoral Fellow	2000–2002
Dr. Jong Kyu Kim	Post-Doctoral Fellow	2003–2005
Dr. Min Ho Kim, SEMCo	Visiting Engineer	2007–2008
Prof. Ji-Myon Lee, Sunchon Univ.	Visiting Professor	2007–2008
Dr. Jaehee Cho	Post-Doctoral Fellow	2008–2009
Dr. Yongjo Park, Samsung LED	Visiting Vice President	2010–2012
Dr. Yangang Andrew Xi	Visiting Scientist	2013–2014
Dr. Guan-Bo Lin	Post-Doctoral Fellow	2014–2015

Graduate students for which I served as Major Research Advisor

Dr. Dean A. Stocker	Ph.D. Dissertation	Ph. D. completed in 1999
Xiaoyun (Jane) Guo	Master Thesis	M.S.E.E. completed in 1999
John W. Graff	Master Thesis	M.S.E.E. completed in 1999
Dr. Ian D. Goepfert	Ph.D. Dissertation	Ph. D. completed in 2000
Yun-Li Li	Master Thesis	M.S.E.E. completed in 2000
Dr. Xiaoyun (Jane) Guo	Ph.D. Dissertation	Ph. D. completed in 2001
Dr. John W. Graff	Ph.D. Dissertation	Ph. D. completed in 2002
Dr. Erik L. Waldron	Ph.D. Dissertation	Ph. D. completed in 2002
Jay M. Shah	Master Thesis	M.S.E.E. completed in 2002
Dr. Yun-Li Li	Ph.D. Dissertation	Ph. D. completed in 2003
Jingqun ("JQ") Xi	Master Thesis	M.S. completed in 2003
Yangang Andrew Xi	Master Thesis	M.S. completed in 2003
Ronald Jackson	Master Thesis	M.S. completed in 2004
Sameer Chhajed	Master Thesis	M.S. completed in 2004
Hong Luo	Master Thesis	M.S. completed in 2005
Xiaolu Li	Master Thesis	M.S. completed in 2005
Kaixuan Chen	Master Thesis	M.S. completed in 2005
Dr. Jay M. Shah	Ph.D. Dissertation	Ph. D. completed in 2006
Frank Mont	Master Thesis	M.S.E.E. completed in 2006
Dr. Hong Luo	Ph.D. Dissertation	Ph. D. completed in 2006
Dr. Jingqun ("JQ") Xi	Ph.D. Dissertation	Ph. D. completed in 2006
Dr. Yangang Andrew Xi	Ph.D. Dissertation	Ph. D. completed in 2006
Won Seok Lee	Master Thesis	M.S. completed in 2007
Qi Dai	Master Thesis	M.S. completed in 2007
Di Zhu	Master Thesis	M.S. completed in 2007

GF Exhibit 1022 - 142/175

Jiuru Xu	Master Thesis	M.S. completed in 2007
Ahmed Noemaun	Master Thesis	M.S. completed in 2007
Roya Mirhosseini	Master Thesis	M.S. completed in 2008
David Poxson	Master Thesis	M.S. completed in 2008
Qifeng Shan	Master Thesis	M.S. completed in 2009
Ming Ma	Master Thesis	M.S. completed in 2010
Xing Yan	Master Thesis	M.S. completed in 2010
Dr. Roya Mirhosseini	Ph.D. Dissertation	Ph. D. completed in 2010
Dr. Sameer Chhajed	Ph.D. Dissertation	Ph. D. completed in 2010
Dr. Jiuru Xu	Ph.D. Dissertation	Ph. D. completed in 2011
Dr. Frank Mont	Ph.D. Dissertation	Ph. D. completed in 2011
Dr. Wonseok Lee	Ph.D. Dissertation	Ph. D. completed in 2011
Dr. Di Zhu	Ph.D. Dissertation	Ph. D. completed in 2011
Dr. Qi Dai	Ph.D. Dissertation	Ph. D. completed in 2011
Dr. Ahmed Noemaun	Ph.D. Dissertation	Ph. D. completed in 2011
Dr. David Poxson	Ph.D. Dissertation	Ph. D. completed in 2011
Dr. Qifeng Shan	Ph.D. Dissertation	Ph. D. completed in 2012
Dr. Ann Mao	Ph.D. Dissertation	Ph. D. completed in 2013
Dr. Xing Yan	Ph.D. Dissertation	Ph. D. completed in 2013
Dr. Ming Ma	Ph.D. Dissertation	Ph. D. completed in 2013
Dr. David Meyaard	Ph.D. Dissertation	Ph. D. completed in 2013
Dr. Guan-Bo Lin	Ph.D. Dissertation	Ph. D. completed in 2013

GF Exhibit 1022 - 143/175

Expert Witness Consulting Service

1997 ***Case***: Hewlett-Packard Company versus CEO of United Epitaxy Company (Taiwan)
Nature: Trade secret misappropriation
Venue: U.S. District Court.
Law firm: Morrison & Foerster LLP, Washington DC.
Role: I served as technical expert witness on behalf of United Epitaxy (Defendant). I wrote one or more expert reports.

1998 ***Case***: Hewlett-Packard Company versus United Epitaxy Company (Taiwan)
Nature: Patent infringement.
Venue: U.S. District Court for the Northern District of California.
Law firm: Quinn Emanuel Urquhart Oliver and Hedges LLP
Role: I served as technical expert witness on behalf of United Epitaxy (Defendant). I wrote one or more expert reports.

2006 ***Case***: Kerr Company versus 3M and Dentsply International Company.
Nature: Patent infringement.
Venue: U.S. District Court for the Western District of Wisconsin.
Law Firm: Woodcock Washburn LLP, Philadelphia, Pennsylvania.
Role: I served as technical expert witness on behalf of Dentsply (Defendant). I wrote one or more expert reports.

2006 ***Case***: Nichia Corporation (Japan) versus Seoul Semiconductor Company (Korea).
Nature: Design patent infringement.
Venue: U.S. District Court for Northern District of California, San Francisco Division.
Law firm: Foley & Lardner LLP Washington DC.
Role: I served as technical expert witness on behalf of Nichia (Plaintiff). I wrote one or more expert reports; I was deposed.

2008 ***Case***: Seoul Semiconductor (SSC) Company LTD (Korea) versus Nichia Corporation (Japan).
Nature: Patent infringement.
Venue: U.S. District Court for the Eastern District of Texas, Beaumont Division.
Law firm: Morrison & Foerster LLP, Palo Alto, California.
Role: I served as technical expert witness on behalf of Nichia (Defendant). I wrote one or more expert reports; I testified in District Court during the claim construction / Markman hearing.

2008 ***Case***: Professor Gertrude Rothschild versus Toshiba Company (Japan).
Nature: Patent infringement.
Venue: U.S. International Trade Commission (ITC), Washington DC.
Law firm: DLA Piper LLP, San Francisco California.
Role: I served as technical expert witness on behalf of Toshiba (Defendant). I wrote one or more expert reports; I was deposed.

2008 ***Case***: Honeywell Company versus Cree Company and Lumileds Company.
Nature: Patent infringement and Reexamination of patent.
Venue: U.S. District Court for the Eastern District of Texas, Marshall Division. Reexamination before the USPTO's Patent Trial and Appeal Board.
Law firms: Paul Hastings LLP, Washington DC and Ingrassia, Fisher & Lorenz PC, Washington DC.
Role: I served as technical expert witness on behalf of Honeywell (Plaintiff). I wrote one or more expert reports. I testified at the USPTO during a re-examination hearing.

2010 ***Case***: Landmark Screens Company versus MLB Company and Kohler.
Nature: Mishandling of a patent application.
Venue: U.S. District Court for the Northern District of California, San Jose Division.
Law firm: Keker & Van Nest LLP, San Francisco, California.
Role: I served as technical expert witness on behalf of MLB and Kohler (Defendant). Negligence in conjunction with a patent application; I wrote one or more expert reports.

2011 ***Case***: Koninklijke Philips Electronics N.V. versus Seoul Semiconductor (SSC) Company LTD.
Nature: Patent infringement.
Venue: U.S. District Court for the Central District of California Southern Division
Law firm: Latham & Watkins LLP, Washington DC.
Role: I served as technical expert witness on behalf of SSC (Defendant). I wrote one or more expert reports.

2011 ***Case***: Jeou-Nan Tseng versus Home Depot USA Inc. and Guangde LEDup Enterprise Inc.
Nature: Patent infringement.
Venue: U.S. District Court for the Western District of Washington at Seattle.
Law firm: DLA Piper, Philadelphia, Pennsylvania.
Role: I served as technical expert witness on behalf of Home Depot (Defendant). I wrote one or more expert reports.

2011 ***Case***: Lightpanels Ltd. Company versus Fuzhou F&V Photographic Company.
Nature: Patent infringement.
Venue: U.S. International Trade Commission (ITC), Washington DC.
Law firm: Locke Lord LLP, New York, New York.
Role: I served as technical expert witness on behalf of Fuzhou F&V and Nanguang Photographic (Defendant). I wrote one or more expert reports; I was deposed.

2012 ***Case***: Osram Company versus LG Company.
Nature: Patent infringement.
Venue: U.S. International Trade Commission (ITC), Washington DC.
Law firm: Finnegan, Henderson, Farabow, Garrett & Dunner, LLP, Washington DC.
Role: I served as technical expert witness on behalf of LG (Defendant). I wrote one or more expert reports; I was deposed; I testified at the ITC Hearing.

2012 ***Case***: Osram Company versus LG Company and Samsung Company.
Nature: Patent infringement.
Venue: U.S. International Trade Commission (ITC), Washington DC.
Law firm: Covington & Burling LLP, Washington DC.
Role: I served as technical expert witness on behalf of LG and Samsung (Defendant). I wrote one or more expert reports; I was deposed; I testified at the ITC Hearing.

2013 ***Case***: Chao Tai Electron Co. LTD. versus LEDup Enterprise Inc. and others.
Nature: Patent infringement.
Venue: U.S. District Court for the Central District of California.
Law firm: Hunton & Williams LLP, Washington DC.
Role: I served as technical expert witness on behalf of LEDup Enterprise Inc. and others (Defendants). I wrote one or more expert reports.

2013 ***Case***: Nichia Corporation versus Everlight Company and Emcore Company.
Nature: Inter Partes Review (IPR).
Venue: USPTO Patent Trial and Appeal Board.

Law firm: Foley & Lardner LLP, Washington DC.
Role: I served as technical expert witness on behalf of Nichia Corporation (Petitioner). I wrote one or more expert reports; I was deposed.

2014 ***Case***: Everlight Electronics Co. LTD. versus Nichia Corporation.
Nature: Patent infringement.
Venue: U.S. District Court for the Eastern District of Michigan, Southern Division.
Law firm: Foley & Lardner LLP, Washington DC.
Role: I served as technical expert witness on behalf of Nichia Corporation (Defendant). I wrote one or more expert reports; I was deposed; I testified at Phase 1 of trial (jury trial) and I testified at Phase 2 of trial (bench trial).

2014 ***Case***: LEDup Company versus Nicolas Holiday Company.
Nature: Patent infringement.
Venue: U.S. District Court for the Central District of California.
Law firm: Pendleton, Wilson, Hennessey, and Crow PC, Denver, Colorado.
Role: I served as technical expert witness on behalf of LEDup (Plaintiff). I wrote one or more expert reports.

2014 ***Case***: Nichia Corporation versus Everlight Electronics Co. LTD.
Nature: Patent infringement.
Venue: U.S. District Court for the Eastern District of Texas, Marshall Division.
Case number: 02:13-cv-702-JRG (E.D. Texas).
Law firm: Rothwell, Figg, Ernst & Manbeck PC, Washington DC.
Role: I served as technical expert witness on behalf of Nichia (Plaintiff). I wrote one or more expert reports; I was deposed; I testified at trial (bench trial).

2015 ***Case***: Cree Company versus Unity Opto, Unity Microelectronics, and Feit Electric Company
Nature: Patent infringement.
Venue: U.S. International Trade Commission (ITC), Washington DC.
Law firm: Alston & Bird LLP, Silicon Valley, East Palo Alto, California.
Role: I served as expert witness on behalf of Unity Opto Technology *et al*. (Defendants). I wrote one or more expert reports; I was deposed; I testified at trial (ITC Hearing).

2015 ***Case***: Honeywell International Inc. versus Cree Inc.
Nature: Inter Partes Review (IPR).
Venue: USPTO Patent Trial and Appeal Board.
Law firm: Arnold & Porter LLP, San Francisco, California.
Role: I served as expert witness on behalf of Honeywell International Inc. (Plaintiff). I wrote one or more expert reports.

2015 ***Case***: Honeywell International Inc. versus Cree Inc.
Nature: Patent infringement.
Venue: U.S. District Court for the District of New Jersey.
Law firm: Arnold & Porter LLP, San Francisco, California.
Role: I served as expert witness on behalf of Honeywell International Inc. (Plaintiff).

2015 ***Case***: Cree Inc. versus Kingbright Electronic Co. LTD and SunLED Corporation.
Nature: Patent infringement.
Venue: U.S. District Court for the Western District of Wisconsin.
Law firm: Hansen Reynolds Dickinson Crueger LLC, Milwaukee, Wisconsin.
Role: I served as technical expert witness on behalf of Kingbright and SunLED (Defendants). I wrote one or more expert reports; I was deposed.

2016 ***Case***: Acuity Brands Lighting Inc. versus Lynk Labs Inc.
Nature: Inter Partes Review (IPR).
Venue: USPTO Patent Trial and Appeal Board.
Law firm: Haynes Boone LLP, Chicago, Illinois.
Role: I served as technical expert witness on behalf of Lynk Labs (Plaintiff). I wrote one or more expert reports.

2016 ***Case***: Godo Kaisha IP Bridge 1 Company versus Broadcom Company and others.
Nature: Patent infringement.
Venue: U.S. District Court for the Eastern District of Texas, Marshall Division.
Law firm: Ropes and Gray LLP, New York City, New York.
Role: I served as technical expert witness on behalf of IP Bridge 1 (Plaintiff). I wrote one or more expert reports; I was deposed.

2016 ***Case***: TSMC Company versus Godo Kaisha IP Bridge 1 Company.
Nature: Inter Partes Review (IPR).
Venue: USPTO Patent Trial and Appeal Board.
Law firm: Greenblum & Bernstein, P.L.C., Reston, Virginia.
Role: I served as technical expert witness on behalf of IP Bridge (Patent Owner). I wrote one or more expert reports; I was deposed.

2017 ***Case***: Harvard University versus Micron Technology Company.
Nature: Patent infringement.
Venue: U.S. District Court for MA, Boston; U.S. District Court for Delaware, Wilmington.
Law firm: Weil Gotshal & Manges LLP, Redwood Shores, California.
Role: I served as technical expert witness on behalf of Micron Technology Company (Defendant). I wrote one or more expert reports; I was deposed.

2017 ***Case***: Seoul Viosys Company versus P3 Company.
Nature: Patent infringement.
Venue: U.S. District Court, Southern District of New York, New York City.
Law firm: Holland & Knight LLP, New York City, New York.
Role: I served as technical expert witness on behalf of Seoul Viosys (Plaintiff). I wrote one or more expert reports.

2017 ***Case***: Nitride Semiconductor Company versus Rayvio Company.
Nature: Patent infringement.
Venue: US District Court for the Northern District of California.
Law firm: Dentons LLP, Palo Alto, California.
Role: I served as technical expert witness on behalf of Rayvio (Defendant).

2018 ***Case***: CRX Tech LLC versus Samsung Electronics Co. LTD.
Nature: Patent infringement.
Venue: U.S. District Court for the Eastern District of Texas, Marshall Division.
Law firm: Arnold & Porter LLP, Los Angeles, California.
Role: I served as technical expert witness on behalf of Samsung (Defendant).

2018 ***Case***: Macom Technology Solutions Holdings Inc. versus Infineon Technologies AG.
Nature: Patent infringement.
Venue: U.S. District Court Central District of California Western Division, Los Angeles.
Law firm: Perkins Coie LLP, Denver, Colorado.

Role: I served as technical expert witness on behalf of Macom (Plaintiff). I wrote one or more expert reports; I was deposed.

2018 ***Case***: Vizio Inc. versus Nichia Corporation.
Nature: Inter Partes Review (IPR).
Venue: USPTO Patent Trial and Appeal Board.
Case number: Case No. IPR-2017-01608 and IPR-2017-01623 (PTAB).
Law firm: Rothwell, Figg, Ernst & Manbeck, P.C., Washington DC.
Role: I served as technical expert witness on behalf of Nichia Corporation (Patent Owner). I wrote one or more expert declarations.

2018 ***Case***: Lowe's Companies Inc. versus Nichia Corporation.
Nature: Inter Partes Review (IPR).
Venue: USPTO Patent Trial and Appeal Board.
Case number: Case No. IPR2017-02014 (PTAB).
Law firm: Rothwell, Figg, Ernst & Manbeck, P.C., Washington DC.
Role: I served as technical expert witness on behalf of Nichia Corporation (Patent Owner). I wrote one or more expert declarations.

2018 ***Case***: Ultravision Technologies LLC versus Prismaflex USA Inc.
Nature: Patent infringement.
Venue: US International Trade Commission (ITC), Washington DC.
Case number: Investigation No. 337-TA-1114 (ITC)
Law firm: Womble Bond Dickinson LLP, Winston-Salem, NC
Role: I served as technical expert witness on behalf of Prismaflex USA (Defendant). I wrote one or more expert reports. I was deposed.

2019 ***Case***: Carl Zeiss AG versus Nikon USA Inc.
Nature: Patent infringement.
Venue: US International Trade Commission (ITC), Washington DC.
Case number: Investigation No. 337-TA-1129 (US ITC)
Law firm: Morrison & Foerster LLP, Los Angeles CA.
Role: I served as technical expert witness on behalf of Nikon USA (Defendant). I wrote one or more expert reports. I was deposed.

2019 ***Case***: ASM IP Holding B.V. versus Hitachi Kokusai Electric Inc.
Nature: Arbitration related to IP licensing dispute.
Venue: ICDR (International Center for Dispute Resolution), Palo Alto CA.
Case number: Case No. ICDR 01-17-0005-1963 (Palo Alto CA)
Law firm: Quinn Emanuel Urquhart & Sullivan LLP, San Francisco CA.
Role: I served as technical expert witness on behalf of ASM IP Holding B.V. (Complainant). I authored multiple witness statements. I testified at the Arbitration Hearing.

2019 ***Case***: Power Integrations Inc. versus C. W. Park.
Nature: Breach of employment contract.
Venue: US District Court, Northern District of California, San Jose Division.
Case number: 5:16-cv-02366-BLF (Northern District of California)
Law firm: Miclean Gleason LLP, San Mateo CA.
Role: I served as technical expert witness on behalf of Power Integrations Inc. (Complainant). I performed analyses relating to switched-mode power supplies (SMPS) including flyback transformers. The matter ended in settlement.

2019 ***Case***: Omni MedSci Inc. versus Apple Inc.
Nature: Patent infringement.
Venue: US District Court, Eastern District of Texas, Marshall Division.
Case number: Civil Action No. 2:18-cv-134-RWS (E.D. Texas)
Law firm: Sidley Austin LLP, Washington DC.
Role: I served as technical expert witness on behalf of Apple Inc. (Defendant). I performed a non-infringement analysis relating to the heart rate monitor of the Apple Watch, authored an expert report, and testified at a deposition.

2019 ***Case***: Fluxwerx Illumination Inc., versus OKT Lighting USA LLC
Nature: Design patent infringement.
Venue: US District Court, Southern District of Texas, Houston Division.
Case number: Civil Action No. 4:19-CV-01113 (S.D. Texas)
Law firm: Burns & Levinson LLP, Boston MA.
Role: I served as technical expert witness on behalf of Fluxwerx Illumination, Inc. (Plaintiff). I performed an infringement analysis.

2020 ***Case***: Lighting Science Group Corporation versus Nichia Corporation and others
Nature: Patent infringement.
Venue: US ITC, Office for Unfair Import Investigations, Washington DC
Case number: Investigation No. 337-TA-1168
Law firm: Shearman & Sterling LLP, New York, NY.
Role: I served as technical expert witness on behalf of Nichia Corporation. I performed a non-infringement analysis, authored an expert report, was deposed, and testified at the ITC hearing as key technical witness on behalf of Nichia and Respondents (6 hours live testimony).

2020 ***Case***: Regents of the University of California versus Amazon, Walmart, Ikea, Target, and others
Nature: Patent infringement.
Venue: US ITC, Office for Unfair Import Investigations, Washington DC
Case number: Investigation No. 337-TA-1172
Law firm: Nixon Peabody LLP, Los Angeles CA.
Role: I served as technical expert witness on behalf of the Regents of the University of California. I performed an infringement analysis, authored an expert report, and was deposed.

2020 ***Case***: Samsung Electronics Company versus Acorn Technologies Company.
Nature: USPTO Inter Partes Review.
Venue: USPTO, Patent Trial and Appeal Board, Alexandria VA.
Case numbers: IPR-2020-01183 ('261), IPR-2020-01182 ('423), IPR-2020-01204 ('336), IPR-2020-01264 ('336), IPR-2020-01205 ('167), IPR-2020-01241 ('167), IPR-2020-01206 ('691), IPR-2020-01279 ('691), IPR-2020-01207 ('395), and IPR-2020-01282 ('395)
Law firm: Desmarais LLP, New York NY.
Role: I served as technical expert witness on behalf of Samsung Electronics Company. I authored several expert declarations and was deposed multiple times.

2020 ***Case***: Satco Company versus The Regents of the University of California.
Nature: USPTO Inter Partes Review.
Venue: USPTO, Patent Trial and Appeal Board, Alexandria VA.
Case number: IPR-2020-00579, IPR-2020-00695, IPR-2020-00780, and IPR-2020-00813.
Law firm: Nixon Peabody LLP, Los Angeles CA.
Role: I served as technical expert witness on behalf of The Regents of the University of California. I authored several expert declarations and was deposed.

2020 ***Case***: Godo Kaisha IP Bridge 1 Company versus Micron Technology Company.
Nature: Patent infringement.
Venue: US District Court for the Western District of Texas, Waco Division.
Case number: C.A. No. 6:20-cv-178-ADA.
Law firm: Orrick Herrington & Sutcliffe LLP, Menlo Park CA.
Role: I served as technical expert witness on behalf of Micron Technology Company. I authored multiple expert reports and was deposed.

2020 ***Case***: Nichia Company versus Healthe Company and Lighting Science Group Company.
Nature: Patent infringement.
Venue: US District Court for the Middle District of Florida, Orlando Division.
Case number: 6:19-cv-1332-RBD-EJK and 6:19-cv-1333-RBD-EJK.
Law firm: Rothwell, Figg, Ernst & Manbeck, PC, Washington DC.
Role: I served as technical expert witness on behalf of Nichia Company. I authored one or more expert reports.

2020 ***Case***: Semiconductor Energy Laboratory (SEL) Co., Ltd. versus BOE Technology Group Co., Ltd.
Nature: Patent infringement.
Venue: US District Court for the Northern District of California.
Case number: 3:20-cv-04297-EMC, N.D. Cal.
Law firm: Fish and Richardson, P.C., Redwood City CA.
Role: I served as technical expert witness on behalf of SEL.

2021 ***Case***: The University of California versus General Electric, Ikea, Home Depot and others
Nature: Patent infringement.
Venue: US ITC, Office for Unfair Import Investigations, Washington DC
Case number: Investigation No. 337-TA-1220
Law firm: Nixon Peabody LLP, Los Angeles CA.
Role: I served as technical expert witness on behalf of the University of California. I performed multiple analyses, authored several expert reports, was deposed multiple times, and testified at trial.

2021 ***Case***: Tianma Microelectronics Co., Ltd. versus Japan Display Inc. (JDI)
Nature: USPTO Inter Partes Review.
Venue: USPTO, Patent Trial and Appeal Board, Alexandria VA
Case numbers: IPR-2021-01029, IPR-2021-01057 and IPR-2021-01058
Law firm: Finnegan, Henderson, Farabow, Garrett & Dunner, LLP, Washington DC.
Role: I served as technical expert witness on behalf of Tianma. I performed multiple analyses and authored several declarations.

2021 ***Case***: Japan Display Inc. (JDI) versus Tianma Microelectronics Co., Ltd.
Nature: Patent infringement.
Venue: US District Court for the Eastern District of Texas, Marshall Division.
Case numbers: Civil Action No. 2:20-cv-00283-JRG; 2:20-cv-00284-JRG; and 2:20-cv-00285-JRG
Law firm: Finnegan, Henderson, Farabow, Garrett & Dunner, LLP, Washington DC.
Role: I served as technical expert witness on behalf of Tianma. I performed multiple analyses, authored several expert reports, and was deposed multiple times.

2022 ***Case***: Satco Products Inc. versus The Regents of the University of California.
Nature: USPTO Inter Partes Review.
Venue: USPTO, Patent Trial and Appeal Board, Alexandria VA.
Case number: IPR-2021-00662.
Law firm: Nixon Peabody LLP, Los Angeles CA.

Role: I served as technical expert witness on behalf of The Regents of the University of California, authored one expert declaration, and was deposed.

2022 ***Case***: Samsung Electronics Co. Ltd. versus Bishop Display Tech LLC.
Nature: USPTO Inter Partes Review.
Venue: USPTO, Patent Trial and Appeal Board, Alexandria VA.
Case numbers: IPR-2022-00500 and IPR-2022-00502.
Law firm: Baker Botts LLP, New York City NY.
Role: I served as technical expert witness on behalf of Samsung Electronics and have authored two expert declarations.

2022 ***Case***: Semiconductor Energy Laboratory (SEL) Co. Ltd. versus TCL China Star Optoelectronics Technology Co., Ltd.
Nature: Patent infringement.
Venue: US District Court for the Central District of California, Southern Division.
Case number: 8:21−cv−00554−JAK−ADS.
Law firm: Fish and Richardson, P.C., Redwood City CA.
Role: I served as technical expert witness on behalf of SEL, authored two expert reports, and was deposed.

2022 ***Case***: Nvidia Corporation versus Ocean Semiconductors LLC.
Nature: USPTO Inter Partes Review.
Venue: USPTO, Patent Trial and Appeal Board, Alexandria VA.
Case number: IPR2022-01288.
Law firm: Sheppard Mullin LLP, Menlo Park CA.
Role: I served as technical expert witness on behalf of Nvidia and authored one expert declaration.

2022 ***Case***: Nicor, Inc. versus SourceBlue LLC and InfiniLux Corporation.
Nature: Patent infringement.
Venue: US District Court for the Central District of California.
Case number: 2:21-cv-05876-AB(PDx) (C.D. Cal.).
Law firm: Loza & Loza IP LLP, Upland CA.
Role: I served as technical expert witness on behalf of Nicor, Inc., authored three expert reports, and was deposed.

2023 ***Case***: Dr. Shimon Maimon versus Lockheed Martin Corporation.
Nature: Dispute relating to a License Agreement.
Venue: JAMS ADR (Alternative Dispute Resolution).
Case number: JAMS Ref. No. 1460005932.
Law firm: Finnegan, Henderson, Farabow, Garrett & Dunner, LLP, Washington DC.
Role: I served as technical expert witness on behalf of Lockheed Martin Corporation, authored three expert reports, was deposed, and testified at the Hearing.

2023 ***Case***: Samsung Electronics Co. Ltd. versus Daedalus Prime LLC.
Nature: USPTO Inter Partes Review.
Venue: USPTO, Patent Trial and Appeal Board, Alexandria VA.
Case number: IPR2023-00536 and IPR2023-00653.
Law firm: Fish & Richardson PC, Minneapolis MN.
Role: I served as technical expert witness on behalf of Samsung Electronics and authored two expert declarations.

2023 ***Case***: Seoul Semiconductor Co. Ltd., et al. versus GE Healthcare Inc.
Nature: Patent infringement.
Venue: United States District Court for the District of Delaware.
Case number: Civil Action No. 1:22-cv-01455.
Law firm: Shearman & Sterling LLP, New York, NY.
Role: I served as technical expert witness on behalf of GE Healthcare.

2023 ***Case***: Efficient Power Conversion Corp. versus Innoscience (Zhuhai) Technology Company.
Nature: Patent infringement.
Venue: US International Trade Commission (ITC), Washington DC.
Case number: Investigation No. 337-TA-1366.
Law firm: Blank Rome LLP, Washington DC
Role: I served as technical expert witness on behalf of EPC, authored multiple expert reports, was deposed, and testified at the ITC Hearing.

2023 ***Case***: Innoscience (Zhuhai) Technology Company versus Efficient Power Conversion Corp.
Nature: USPTO Inter Partes Review.
Venue: USPTO, Patent Trial and Appeal Board, Alexandria VA.
Case number: IPR2023-01381, IPR2023-01382, IPR2023-01383, and IPR2023-01384.
Law firm: Blank Rome LLP, Washington DC.
Role: I served as technical expert witness on behalf of Efficient Power Conversion Corp. and authored multiple expert declarations.

2023 ***Case***: Xu Peicheng (Hong Kong) Optoelectronic Technol. Co. versus SemiSilicon Technol. Corp.
Nature: USPTO Inter Partes Review.
Venue: USPTO, Patent Trial and Appeal Board, Alexandria VA.
Case number: IPR2024-00156 and IPR2024-00157 (US Patent 8,124,988 and US 8,884,546)
Law firm: Rimon Law PC, McLean VA.
Role: I served as technical expert witness on behalf of Xu Peicheng and authored two expert declarations.

2024 ***Case***: Seasonal Specialties, LLC versus LEDUP Manufacturing Group LTD.
Nature: Patent infringement.
Venue: US District Court, Central District of California, Western Division.
Case number: 2:23-cv-06318-SB-AS.
Law firm: Fairfield & Woods PC, Denver CO.
Role: I served as technical expert witness on behalf of LEDUP Manufacturing Group and composed multiple Invalidity Claim Charts.

2024 ***Case***: Wuxi Autowell Technology Co. Ltd. versus Teamtechnik Maschinen und Anlagen GmbH.
Nature: USPTO Inter Partes Review.
Venue: USPTO, Patent Trial and Appeal Board, Alexandria VA.
Case number: US patent numbers 8,247,681 and 8,253,009.
Law firm: Novick, Kim & Lee, PLLC, (NKL Law), Fairfax VA.
Role: I served as technical expert witness on behalf of Wuxi Autowell Technology and composed one expert declaration.

2024 ***Case***: Greenthread LLC versus Omnivision Technologies, Inc., and Texas Instruments, Inc.
Nature: Patent infringement.
Venue: US District Court, Eastern District of Texas, Marshall Division.
Case numbers: 2:23-cv-00212-JRG and 2:23-cv-00157-JRG.
Law firms: Benesch Friedlander Coplan & Aronoff LLP and Caldwell Cassady & Curry PC.
Role: I served as technical expert witness on behalf of Omnivision Technologies and Texas

Instruments, composed one expert declaration, and was deposed.

2024 ***Case***: Lian Li Industrial Co. Ltd. and CHEN, Chien-Hao versus Thermaltake Technology Co. Ltd.
Nature: Patent infringement.
Venue: US District Court, Central District of California.
Case numbers: 2:23-cv-07470.
Law firm: The Gikkas Law Firm, PC, Palo Alto CA
Role: I served as technical expert witness on behalf of Thermaltake Technology, composed one expert declaration, and was deposed.

2024 ***Case***: Pictive Displays International Ltd. versus Samsung Electronics Co. Ltd.
Nature: Patent infringement.
Venue: US District Court, Eastern District of Texas, Marshall Division.
Case numbers: 2:23-cv-00495-JRG.
Law firm: Quinn Eammanual Urquhart & Sullivan LLP, Seattle WA.
Role: I served as technical expert witness on behalf of Samsung Electronics Co., composed one expert declaration, and was deposed.

2024 ***Case***: Feit Electric Company versus Savant Technologies and additional parties
Nature: Patent infringement.
Venue: US District Court, Northern District of Ohio and additional venues.
Case numbers: 1:24-cv-473.
Law firm: Benesch, Friedlander, Coplan & Aronoff LLP, Chicago ILL.
Role: I served as technical expert witness on behalf of Feit Electric Company, composed one or more expert declarations, and was deposed.

2024 ***Case***: Savant Technologies LLC and LEDvance LLC versus Feit Electric Company.
Nature: USPTO Inter Partes Review.
Venue: USPTO, Patent Trial and Appeal Board, Alexandria VA.
Case number: US patent number 8,604,678. IPR2024-01357.
Law firm: Novick, Kim & Lee, PLLC, (NKL Law), Fairfax VA.
Role: I served as technical expert witness on behalf of Feit Electric Company and composed one expert declaration.

2024 ***Case***: 138 East LCD Advancements Ltd. versus BOE Technology Group Co., Ltd.
Nature: Patent infringement.
Venue: US District Court, Eastern District of Texas, Marshall Division.
Case numbers: 2:23-cv-515-JRG-RSP.
Law firm: Robins Kaplan LLP Law Firm, Minneapolis MN.
Role: I served as technical expert witness on behalf of 138 East LCD Advancements Ltd. and composed one or more expert declarations.

2024 ***Case***: BOE Technology Group Co., Ltd. versus 138 East LCD Advancements Ltd.
Nature: USPTO Inter Partes Review.
Venue: USPTO, Patent Trial and Appeal Board, Alexandria VA.
Case number: IPR2024-00973, IPR2024-00977, and IPR2024-00977.
Law firm: Robins Kaplan LLP Law Firm, Minneapolis MN.
Role: I served as technical expert witness on behalf of 138 East LCD Advancements Ltd. and composed multiple expert declarations.

2025 ***Case***: YMTC (Yangtze Memory Technologies Company, Ltd.) versus Micron Technology Inc.
Nature: Patent infringement.
Venue: US District Court, Northern District of California
Case number: 3:23-cv-05792-RFL.

Law firm: Orrick, Herrington & Sutcliffe LLP.
Role: I served as technical expert witness on behalf of Micron Technology Inc. and composed one expert declaration.

United States Patents

1. A. Fischer, Y. Horikoshi, K. Ploog, and E. F. Schubert "Semiconductor devices with at least one monoatomic layer of doping atoms" European Patent No. 0183 146 A2; US Patent No. 4,882,609; issued on November 15 (1985)
2. J. E. Cunningham, E. F. Schubert, and W. T. Tsang "Delta doped ohmic metal to semiconductor contacts" US Patent No. 4,772,934; issued on September 20 (1988)
3. J. E. Cunningham, E. F. Schubert, and W. T. Tsang "Field-effect transistor having a delta-doped ohmic contact" US Patent No. 4,780,748; issued on October 25 (1988)
4. J. E. Cunningham, E. F. Schubert, and W. T. Tsang "Method for fabricating a field-effect transistor with a self-aligned gate" US Patent No. 4,784,967; issued on November 15 (1988)
5. E. Fred Schubert "Optical communications modulator device" US Patent No. 4,929,064; filed on July 21 (1988) issued on May 29 (1990)
6. J. E. Cunningham, A. M. Glass, and E. F. Schubert "Devices having asymmetric delta-doping" US Patent No. 4,974,044; issued on November 27 (1990)
7. J. E. Cunningham, A. M. Glass, and E. F. Schubert "Devices having asymmetric delta-doping" US Patent No. 5,031,012; issued on July 9 (1991)
8. J. E. Cunningham, T. D. Harris, E. F. Schubert, and J. P. van der Ziel "Optical system including wavelength tunable semiconductor laser" US Patent No. 4,980,892; issued on December 25 (1990)
9. R. F. Kopf, J. M. Kuo, H. S. Luftman, and E. F. Schubert "Doping procedures for semiconductor devices" US Patent No. 5,024,967; issued on June 18 (1991)
10. D. G. Deppe, R. D. Dupuis, and E. F. Schubert "Vertical cavity semiconductor lasers" US Patent No. 5,018,157; issued on May 21 (1991)
11. D. G. Deppe, L. C. Feldman, R. F. Kopf, E. F. Schubert, L.-W. Tu, and G. J. Zydzik "Vertical cavity surface emitting lasers with electrically conducting mirrors" US Patent No. 5,068,868; issued on November 26 (1991)
12. D. G. Deppe, E. F. Schubert, L.-W. Tu, and G. D. Zydzik "Optical devices with electron-beam evaporated multilayer mirror" US Patent No. 5,206,871; issued on April 27 (1993)
13. R. F. Kopf, E. F. Schubert, H. O'Brian, L.-W. Tu, Y. H. Wang, and G. J. Zydzik "Vertical cavity surface emitting lasers with transparent electrodes" US Patent No. 5,115,441; issued on May 19 (1992)
14. E. F. Schubert, L.-W. Tu, and G. J. Zydzik "Elimination of heterojunction band discontinuities" US Patent No. 5,170,407; issued on December 8 (1992)
15. S. W. Downey, A. B. Emerson, R. F. Kopf, and E. F. Schubert "Devices having repetitive layers" US Patent No. 5,226,055; issued on July 6 (1993)
16. A. Y. Cho, E. F. Schubert, L.-W. Tu, and G. J. Zydzik "Resonant cavity light emitting diode" US Patent No. 5,226,053; issued on July 6 (1993)
17. L. C. Feldman, N. E. J. Hunt, D. C. Jacobson, J. M. Poate, E. F. Schubert, A. M. Vredenberg, Y. H. Wong, and G. J. Zydzik "Erbium-doped optical devices" US Patent No. 5,249,195; issued on September 28 (1993)

GF Exhibit 1022 - 155/175

18. R. F. Kopf and E. F. Schubert "PN junction devices with group IV element-doped group III-V compound semiconductors" US Patent No. 5,268,582; issued on December 7 (1993)

19. N. E. J. Hunt and E. F. Schubert "Single mirror light-emitting diodes with enhanced intensity" US Patent No. 5,362,977; issued on November 8 (1994)

20. N. E. J. Hunt, E. F. Schubert, and G. J. Zydzik "Photodetector with a resonant cavity" US Patent No. 5,315,128; issued on May 24 (1994)

21. A. M. Glass, N. E. J. Hunt, J. M. Poate, E. F. Schubert, and G. J. Zydzik "Absorption resonant rare-earth-doped microcavities" US Patent No. 5,363,398; issued on November 8 (1994)

22. N. E. J. Hunt, M. Passlack, E. F. Schubert, and G. J. Zydzik "Electron beam deposition of gallium oxide thin films using a single high purity crystal source" US Patent No. 5,451,548; issued on September 19 (1995)

23. N. K. Dutta, R. J. Fischer, N. E. J. Hunt, M. Passlack, E. F. Schubert, and G. J. Zydzik "Gallium oxide coatings for optoelectronic devices using electron beam evaporation of a high purity single crystal $Gd_3Ga_5O_{12}$ source" US Patent No. 5,550,089; issued on August 27 (1996)

24. U. K. Chakrabarti, J. de Jong, E. F. Schubert, J. Wynn, and G. J. Zydzik "Mechanical fixture and procedure for in-vacuum coating of semiconductor laser facets" US Patent No. 5,719,077; issued on February 17 (1998)

25. E. F. Schubert "Enhanced p-type doping of wide-gap semiconductors" US Patent No. 5,932,899; issued on August 3 (1999)

26. J. D. Joannopoulos, S. Fan, P. R. Villeneuve, and E. F. Schubert "Light emitting device utilizing a periodic dielectric structure" US Patent No. 5,955,749; issued on September 21 (1999)

27. E. F. Schubert and D. A. Stocker "Crystallographic wet chemical etching on GaN" US Patent No. 6,294,475; issued on September 25 (2001)

28. E. F. Schubert "Light-emitting diode with omni-directional reflector" US Patent No. 6,784,462; issued on August 31 (2004)

29. Jaehee Cho, Hong Luo, Jong Kyu Kim, Yong Jo Park, Cheolsoo Sone, and E. Fred Schubert "Light emitting device having protection element and method of manufacturing the light emitting device" US Patent No. 7,411,221 B2; issued on August 12 (2008)

30. Jaehee Cho, Frank Wilhelm Mont, Cheolsoo Sone, Jong-kyu Kim, June-o Song, E. Fred Schubert "Optical thin film, semiconductor light emitting device having the same and methods of fabricating the same" US Patent No. 7,483,212; issued on January 27 (2009)

31. Jaehee Cho, Martin F. Schubert, E. Fred Schubert, Jong Kyu Kim, Cheolsoo Sone "Light emitting diodes and display apparatuses using the same" US Patent No. 7,560,746; issued on July 14 (2009)

32. Martin F. Schubert, Sameer Chhajed, Jong Kyu Kim, E. Fred Schubert, and Jaehee Cho "Reflector shapes for light-emitting diode-polarized light sources" US Patent No. 7,766,495; filed on June 24 (2008); issued on August 3 (2010)

33. Martin F. Schubert, Ahmed Noemaun, Sameer Chhajed, Jong Kyu Kim, E. F. Schubert, Cheolsoo Sone "Encapsulant shapes for light emitting devices lacking rotational symmetry designed to enhance extraction of light with a particular linear polarization" US Patent No. 7,819,557; filed on June 24 (2008); issued on October 6 (2010)

GF Exhibit 1022 - 156/175

34. Jaehee Cho, Jong-Kyu Kim, Cheolsoo Sone, and E. F. Schubert "LED device having diffuse reflective surface" US Patent No. 7,816,855; filed on December 28 (2005); issued on October 19 (2010)

35. Jaehee Cho, E. Fred Schubert, and Xing Yan "Liquid crystal display with refractive index matched electrodes" US Patent No. 8,164,727; filed on April 28, 2010; issued on April 24 (2012)

36. Mary H. Crawford, Daniel Koleske, Jaehee Cho, Di Zhu, Ahmed Noemaun, Martin F. Schubert, and E. Fred Schubert "High efficiency III-Nitride light-emitting diodes" US Patent No. 8,451,877; filed on March 17, 2011; issued on May 28 (2013)

37. Min-ho Kim, Martin F. Schubert, Jong Kyu Kim, E. Fred Schubert, Yongjo Park, Cheolsoo Sone, and Sukho Yoon "Nitride semiconductor light-emitting device" US Patent No. 8,502,266; filed on September 8 (2010); issued on August 6 (2013)

38. David J. Poxson, Frank W. Mont, E. Fred Schubert, and Richard W. Siegel "Tunable nanoporous film on polymer substrates, and method for their manufacture" US Patent No. 9,732,427; filed on April 23 (2013); issued on August 15 (2017)

39. Sameer Chhajed, Jong Kyu Kim, Shawn-Yu Lin, Mei-Ling Kuo, Frank W Mont, David J Poxson, E Fred Schubert, Martin F Schubert "Ultra-low reflectance broadband omni-directional anti-reflection coating" US Patent No. 11,088,291; filed on July 22 (2016); issued on August 10 (2021)

Patent Licensing: Several patents listed above have been licensed to companies, including the Luminus Devices Company, Samsung Company, Epistar Company, Cree Company, Osram Company, and Lumileds Company.

Journal Publications

1982

1. H. Künzel, H. Jung, E. F. Schubert, and K. Ploog "Influence of growth conditions and of alloy composition on electrical and optical properties of MBE AlGaAs" *Journal Physique Colloque C5*, **C5/175**, 42 (1982)

1984

2. E. F. Schubert, K. Ploog, H. Dämbkes, and K. Heime "Selectively doped n-AlGaAs/ GaAs heterostructures with high-mobility two-dimensional electron gas for field-effect transistors. Part I: Effect of parallel conductance" *Applied Physics* **A33**, 63 (1984)
3. E. F. Schubert, K. Ploog, H Dämbkes., and K. Heime "Selectively doped n-AlGaAs/ GaAs heterostructures with high-mobility two-dimensional electron gas for field-effect transistors. Part II: Hot electron effects" *Applied Physics* **A33**, 183 (1984)
4. E. F. Schubert and K. Ploog "Transient photoconductivity in selectively doped n-type AlGaAs/GaAs heterostructures" *Physical Review* **B29**, 4562 (1984)
5. E. F. Schubert, E. O. Göbel, Y. Horikoshi, K. Ploog, and H. J. Queisser "Alloy broadening in photoluminescence spectra of AlGaAs" *Physical Review* **B30**, 813 (1984)
6. E. F. Schubert and K. Ploog "Shallow and deep donors in direct-gap n-AlGaAs:Si grown by molecular-beam epitaxy" *Physical Review* **B30**, 7021 (1984)

1985

7. E. F. Schubert, J. Knecht, and K. Ploog "Transient and persistent photoconductivity in n-AlGaAs and selectively doped n-AlGaAs/GaAs heterostructures*" Journal of Physics C: Solid-State Physics* **18**, L215 (1985)
8. E. F. Schubert, A. Fischer, and K. Ploog "GaAs sawtooth superlattice light-emitting diode operating monochromatically at λ > 0.9 μm" *Electronics Letters* **21**, 411 (1985)
9. E. F. Schubert, A. Fischer, Y. Horikoshi, and K. Ploog "GaAs sawtooth superlattice laser emitting at wavelengths λ > 0.9 μm" *Applied Physics Letters* **47**, 219 (1985)
10. E. F. Schubert, A. Fischer, and K. Ploog "Electron-impurity tunneling in selectively doped n-type AlGaAs/GaAs heterostructures" *Physical Review* **B31**, 7937 (1985)
11. E. F. Schubert, Y. Horikoshi, and K. Ploog "Radiative electron-hole recombination in a new sawtooth semiconductor superlattice grown by molecular-beam epitaxy" *Physical Review* **B32**, 1085 (1985)
12. E. F. Schubert and K. Ploog "The delta-doped field-effect transistor" *Japanese Journal Applied Physics Letters* **24**, L608 (1985)
13. K. Ploog, A. Fischer, E. F. Schubert "Preparation and properties of a new GaAs sawtooth doping superlattice" *Proceedings of the Second International Conference (Yamada Conference) on Modulated Semiconductor Structures*; September 9-13 (1985), Kyoto, Japan
14. E. F. Schubert and K. Ploog "Electron subband structure in selectively doped n-AlGaAs/ GaAs heterostructures*" IEEE Transactions on Electron Devices*, **ED-32**, 1868 (1985)
15. E. F. Schubert and K. Ploog "Optical properties of a new sawtooth superlattice grown by molecular beam epitaxy" *Journal de Physique* (Paris), **46**, 147 (1985)

1986

16. E. F. Schubert, A. Fischer, and K. Ploog "The delta-doped field-effect transistor" *IEEE Transactions on Electron Devices,* **ED-33**, 625 (1986)
17. E. F. Schubert and K. Ploog "Interpretation of capacitance-voltage profiles from delta-doped GaAs grown by molecular-beam epitaxy" *Japanese Journal of Applied Physics* **25**, 966 (1986)
18. E. F. Schubert and W. T. Tsang "Photoluminescence line shape of excitons in alloy semiconductors" *Physical Review B, Rapid Communications*, **B34**, 2991 (1986)
19. E. F. Schubert, J. E. Cunningham, W. T. Tsang, and T. H. Chiu "Delta-doped ohmic contacts to n-GaAs" *Applied Physics Letters* **49**, 292 (1986) and *Applied Physics Letters* **49**, 984 (1986)
20. K. Ploog, A. Fischer, and E. F. Schubert "Preparation and properties of a new GaAs sawtooth doping superlattice" *Surface Science* **174**, 120 (1986)
21. B. I. Miller, E. F. Schubert, U. Koren, A. Ourmazd, A. H. Dayem, and R. J. Capik "High quality narrow GaInAs/InP quantum wells grown by atmospheric organometallic vapor phase epitaxy" *Applied Physics Letters* **49**, 1384 (1986)
22. E. F. Schubert, Cunningham J. E., and Tsang W. T. "Self-aligned enhancement and depletion-mode GaAs field-effect transistors employing the delta-doping technique" *Applied Physics Letters* **49**, 1729 (1986)

GF Exhibit 1022 - 158/175

23. W. T. Tsang, E. F. Schubert, A. H. Dayem, J. E. Cunningham, T. H. Chiu, J. A. Ditzenberger, J. Shah, and J. L. Zyskind "Very high quality GaInAs grown by chemical beam epitaxy" *Journal of Electronic Materials* **15**, 307 (1986)
24. W. T. Tsang and E. F. Schubert "Extremely high quality GaInAs/InP quantum wells grown by chemical beam epitaxy" *Applied Physics Letters* **49**, 220 (1986)
25. W. T. Tsang, A. H. Dayem, T. H. Chiu, J. E. Cunningham, E. F. Schubert, J. A. Ditzenberger, J. Shah, J. L. Zyskind, and N. Tabatabaie "Chemical beam epitaxial growth of extremely high quality GaInAs on InP" *Applied Physics Letters* **49**, 170 (1986)
26. E. F. Schubert, A. Fischer, and K. Ploog "Photoconductivity in selectively n- and p-doped AlGaAs/GaAs heterostructures" *Solid-State Electronics 29*, 173 (1986)

1987

27. E. F. Schubert, J. E. Cunningham, and W. T. Tsang "'Type A' sawtooth doping superlattice: realization of the Esaki-Tsu type superlattice" *Physical Review B Rapid Communications* **B36**, 1348 (1987)
28. E. F. Schubert, J. E. Cunningham, and W. T. Tsang "Electron-mobility enhancement and electron-concentration enhancement in delta-doped n-GaAs at T = 300 K" *Solid-State Communications* **63**, 591 (1987)
29. W. T. Tsang, E. F. Schubert, T. H. Chiu, J. E. Cunningham, E. G. Burkhardt, J. A. Ditzenberger, and E. Agyekum "Growth of high-quality GaInAsP by chemical beam epitaxy" *Applied Physics Letters* **51**, 761 (1987)
30. J. E. Cunningham, W. T. Tsang, T. H. Chiu, E. F. Schubert, and J. A. Ditzenberger "MBE grown high purity GaAlAs" *J. Vac. Sci. Technol*. **A5**, 761 (1987)
31. W. T. Tsang, E. F. Schubert, T. H. Chiu, J. E. Cunningham, and J. A. Ditzenberger "Chemical beam epitaxial growth of very high quality GaInAs and GaInAs/InP quantum well heterostructures" *GaAs and Related Compounds* (1987) Ed. by W. T. Lindley.
32. J. E. Cunningham, W. T. Tsang, T. H. Chiu, and E. F. Schubert "Molecular beam epitaxial growth of high purity AlGaAs" *Applied Physics Letters* **50**, 769 (1987)
33. Y. Horikoshi, A. Fischer, E. F. Schubert, and K. Ploog "High-mobility two-dimensional electron gas from delta-doped asymmetric AlGaAs/GaAs/AlGaAs quantum wells" *Japanese Journal Applied Physics* **26**, 263 (1987)
34. T. H. Chiu, E. Agyekum, J. A. Ditzenberger, A. Robertson, E. F. Schubert, W. T. Tsang, and C. W. Tu "Growth and characterization of (001) GaAs epilayers by chemical beam epitaxy" *Journal of Electronic Materials* **16**, A21 (1987)
35. E. F. Schubert, J. E. Cunningham, and W. T. Tsang "Perpendicular electronic transport in doping superlattices" *Applied Physics Letters* **51**, 817 (1987)
36. E. F. Schubert, J. E. Cunningham, W. T. Tsang, and G. L. Timp "Selectively delta-doped AlGaAs/GaAs heterostructures with two-dimensional electron-gas concentrations $n_{2DEG} \geq 1.5 \times 10^{12}$ cm^{-2} for field-effect transistors" *Applied Physics Letters* **51**, 1170 (1987)
37. T. H. Chiu, W. T. Tsang, E. F. Schubert, and E. Agyekum "Chemical beam epitaxial growth of high-purity GaAs using trimethylgallium and arsine" *Applied Physics Letters* **51**, 1109 (1987)

1988

38. B. Ullrich, E. F. Schubert, J. Stark, and J. E. Cunningham "Localization of impurities in delta-doped n-type GaAs" *Applied Physics* **A47**, 123 (1988)
39. E. F. Schubert, J. Stark, T. H. Chiu, and B. Tell "Diffusion of atomic silicon in gallium arsenide" *Applied Physics Letters* **53**, 293 (1988)
40. E. F. Schubert, J. Stark, B. Ullrich, and J. E. Cunningham "Spatial localization of impurities in delta-doped GaAs" *Applied Physics Letters* **52**, 1508 (1988)
41. J. E. Cunningham, G. Timp, E. F. Schubert, W. T. Tsang, P. G. N. DeVegvar, T. H. Chiu, and E. Agyekum "Enhancements in two-dimensional electron gas density and mobility in delta-doped AlGaAs heterostructures" *Proceedings Materials Research Society Symposium* **102** (1988)
42. T. H. Chiu, E. F. Schubert, J. E. Cunningham, and B. Tell "Diffusion studies of the Si delta-doped GaAs by capacitance-voltage measurements" *Journal of Applied Physics, Rapid Communication* **64**, 1578 (1988)
43. T. Y. Kuo, J. E. Cunningham, E. F. Schubert, W. T. Tsang, T. H. Chiu, F. Ren, and C. G. Fonstad "Selectively delta-doped quantum well transistor grown by gas source molecular beam epitaxy" *Journal of Applied Physics* **64**, 3324 (1988)
44. E. F. Schubert, B. Ullrich, T. D. Harris, and J. E. Cunningham "Quantum-confined interband absorption in GaAs sawtooth doping superlattices" *Physical Review* **B38**, 8305 (1988)

GF Exhibit 1022 - 159/175

45. T. H. Chiu, E. F. Schubert, J. E. Cunningham, W. T. Tsang, and B. Tell "Chemical beam epitaxial growth and capacitance-voltage characterization of Si-doped GaAs" *Proceedings Materials Research Society Symposium* **102**, 475 (1988)
46. E. F. Schubert and J. E. Cunningham "Photonic switching by tunneling-assisted absorption modulation in a GaAs sawtooth structure" *Electronics Letters* **24**, 980 (1988)
47. E. F. Schubert, T. H. Chiu, J. E. Cunningham, B. Tell, and J. B. Stark "Spatial localization and diffusion of atomic silicon in delta-doped GaAs" *Journal of Electronics Materials*, **17**, 527 (1988)
48. R. J. Malik, R. Nottenburg, E. F. Schubert, J. F. Walker, and R. W. Ryan "Carbon doping in molecular beam epitaxy of GaAs from a heated graphite filament" *Applied Physics Letters* **53**, 2661 (1988)
49. E. F. Schubert, T. D. Harris, and J. E. Cunningham "Minimization of dopant-induced random potential fluctuations in sawtooth doping superlattices" *Applied Physics Letters* **53**, 2208 (1988)
50. T. Y. Kuo, J. E. Cunningham, E. F. Schubert, W. T. Tsang, T. H. Chiu, and C. G. Fonstad "Experimental and theoretical characterization of the delta-doped quantum well transistor grown by gas source molecular beam epitaxy" *IEEE Transactions on Electron Devices* **35**, 2449 (1988).

1989

51. E. F. Schubert, J. E. Cunningham, T. H. Chiu, J. B. Stark, B. Tell, and C. W. Tu "Spatial localization and diffusion of Si in delta-doped GaAs and AlGaAs and its application to electron-mobility optimization in selectively doped heterostructures" *GaAs and Related Compounds* Ed. J. S. Harris. (1989)
52. E. F. Schubert, T. D. Harris, J. E. Cunningham, and W. Jan "Multi-subband photoluminescence in sawtooth doping superlattices" *Physical Review* **B39**, 11011 (1989)
53. J. E. Cunningham, G. Timp, A. M. Chang, T. H. Chiu, W. Jan, E. F. Schubert, and W. T. Tsang "Spatial localization of Si in selectively delta-doped AlGaAs/GaAs heterostructures for high mobility and density realization" *Journal Crystal Growth* **95**, 253 (1989)
54. B. Ullrich, C. Zhang, E. F. Schubert, J. E Cunningham., and K. von Klitzing "Transmission spectroscopy on sawtooth doping superlattices" *Physical Review* **B39**, 3776 (1989)
55. E. F. Schubert, J. E. Cunningham, T. H. Chiu, J. B. Stark, B. Tell, and C.W Tu. "Spatial localization and diffusion of Si in delta-doped GaAs and AlGaAs and its application to electron-mobility optimization in selectively doped heterostructures" *GaAs and Related Compounds 1988* (Institute Physics Conference Series **96**, Bristol, 1989) p. 33
56. A. M Glass., E. F. Schubert, B. A. Wilson, C. E. Bonner, J. E. Cunningham, D. H. Olson, and W. Jan "A novel photo-voltaic delta-doped GaAs superlattice structure" *Applied Physics Letters* **54**, 2247 (1989)
57. E. F. Schubert, L. Pfeiffer, K. W. West, and A. Izabelle "Dopant distribution for maximum carrier-mobility in selectively doped $Al_{0.30}Ga_{0.70}As$/GaAs heterostructures" *Applied Physics Letters* **54**, 1350 (1989)
58. J. E. Cunningham, G. Timp, T. Chiu, W. T Tsang., E. F. Schubert, and W. Jan "Mobility and density enhancement in delta-doped $Al_{0.30}Ga_{0.70}As$/GaAs heterostructures" *GaAs and Related Compounds 1988* (Institute Physics Conference Series, **96**, Bristol, 1989) p. 33
59. E. F. Schubert, C. W. Tu, R. Kopf, J. M. Kuo and L. M. Lunardi "Diffusion and drift of Si-dopants in delta-doped n-type AlGaAs" *Applied Physics Letters* **54**, 2592 (1989)
60. E. F. Schubert, J. P. van der Ziel, J. E. Cunningham, and T. D. Harris "Tunable stimulated emission of radiation in GaAs doping superlattices" *Applied Physics Letters* **55**, 757 (1989)
61. E. F. Schubert, T. D. Harris, and J. E. Cunningham "Quantum-confined optical interband transitions in delta-doped doping superlattices" *Proceedings of Mats. Research Society* Editors: C. W. Tu and A. C. Gossard **145**, 21 (1989)
62. D. G. Deppe, A. Y. Cho, K. F. Huang, R. J. Fischer, K. Tai, E. F Schubert, and Y. K. Chen "AlGaAs-GaAs and AlGaAs-GaAs-InGaAs vertical cavity surface emitting lasers with Ag mirrors" *Journal of Applied Physics* **66**, 5629 (1989)
63. W. S. Hobson, Pearton S., Schubert E. F., and Cabaniss G. "Zinc delta-doping of GaAs by organometallic vapor phase epitaxy" *Applied Physics Letters* **55**, 1546 (1989)

1990

64. (**Invited**) E. F. Schubert, J. M. Kuo, and R. F. Kopf "Theory and experiment of capacitance-voltage profiling on semiconductors with quantum confinement" *Journal Electronic Materials, Special Issue on "Artificially Structured Materials"* **19**, 521 (1990)
65. (**Invited**) E. F. Schubert "Delta-doping of III-V compound semiconductors: Fundamentals and device applications" *Journal of Vacuum Science and Techno*logy, **A8**, 2980 (1990)
66. (**Invited**) E. F. Schubert "Optical properties of delta-doped doping superlattices" *Surface Science*, **228**, 240 (1990)

GF Exhibit 1022 - 160/175

67. E. F. Schubert, J. M. Kuo, R. F. Kopf, H. S. Luftman, L. C. Hopkins, and N. J. Sauer, "Beryllium delta-doping of GaAs grown by molecular beam epitaxy" *Journal of Applied Physics* **67**, 1969 (1990)
68. D. G. Deppe, N. D. Gerrard, C. J. Pinzone, R. D. Dupuis, and E. F. Schubert "Quarter-wave Bragg reflector stack of InP/$In_{0.53}Ga_{0.47}As$ for 1.65 μm wavelength" *Applied Physics Letters* **56**, 315 (1990)
69. E. F. Schubert, J. M. Kuo, R. F. Kopf, A. S. Jordan, H. S. Luftman, and L. C. Hopkins "Fermi-level-pinning induced dopant redistribution in semiconductors during growth by molecular beam epitaxy" *Physical Review* **42**, 1364 (1990)
70. E. F. Schubert, R. F. Kopf, J. M. Kuo, H. S. Luftman, and P. A. Garbinski "Spatial resolution of the capacitance-voltage profiling technique on semiconductors with quantum confinement" *Applied Physics Letters* **57**, 497 (1990)
71. (**Invited**) E. F. Schubert "Optical and electronic properties of delta-doped doping superlattices" *Journal of Optical and Quantum Electronics*, **22**, S141 (1990)
72. E. F. Schubert, L.-W. Tu, R. F. Kopf, G. J. Zydzik, and D. G. Deppe "Low threshold vertical cavity surface emitting lasers with metallic reflectors" *Applied Physics Letters*, **57**, 117 (1990)
73. E. F. Schubert, F. Capasso, A. L. Hutchinson, S. Sen, and A. C. Gossard "Observation of charge storage and intra-subband relaxation in resonant tunneling via a high sensitivity capacitance technique" *Applied Physics Letters*, **57**, 2820 (1990)
74. H.-J. Gossmann, E. F. Schubert, D. J. Eaglesham, and M. Cerullo "Low temperature Si molecular beam epitaxy: Solution to the doping problem" *Applied Physics Letters*, **57**, 2440 (1990)
75. S. W. Downey, R. F. Kopf, E. F. Schubert, and J. M. Kuo "Resonance ionization mass spectrometry of AlGaAs: Resolution, sensitivity, and matrix effect" *Applied Optics*, **29**, 4938 (1990)
76. L.-W. Tu, E. F. Schubert, R. F Kopf., G. J., Zydzik M. Hong, S. N. G. Chu, and J. P. Mannaerts "Vertical cavity surface emitting lasers with semitransparent metallic mirrors and high quantum efficiencies" *Applied Physics Letters*, **57**, 2045 (1990)
77. E. F. Schubert, H. S. Luftman, R. F. Kopf, R. L Headrick., and J. M. Kuo "Secondary ion mass spectroscopy on delta-doped GaAs grown by molecular beam epitaxy" *Applied Physics Letters*, **57**, 1799 (1990)
78. H.-J. Gossmann, E. F. Schubert, D. J. Eaglesham, and M. Cerullo "Si molecular beam epitaxy at room temperature: Solution to the Si doping problem" *Proceedings of the International Conference on Electronic Materials*, 11541-9008-48TM

1991

79. (**Invited**) E. F. Schubert and R. F. Kopf "Delta-doping in III-V semiconductors" *Materials Science Forum*, 65 & 66, 53 (Trans Tech Publications, Zürich, 1991)
80. L.-W. Tu, Y. H. Wang, E. F. Schubert, B. E. Weir, G. J. Zydzik, and A. Y. Cho "High temperature performance of three-quantum-well vertical-cavity top-emitting lasers" *Electronics Letters* **27**, 457 (1991)
81. L.-W. Tu, E. F. Schubert, H. M. O'Brian, Y.-H. Wang, B. E Weir., G. J. Zydzik, and A. Y. Cho "Transparent conductive metal-oxide contacts in vertical-injection top-emitting quantum well lasers" *Applied Physics Letters* **58**, 790 (1991)
82. L. Pfeiffer, E. F. Schubert, K. W. West, and C. W. Magee "Si dopant migration and the AlGaAs/GaAs inverted interface" *Applied Physics Letters* **58**, 2258 (1991)
83. E. F. Schubert "Doping distributions in III-V semiconductors" *Advanced Processing and Characterization Technologies, American Vacuum Society Series* **10**, 5 (American Institute of Physics, New York, 1991)
84. R. F. Kopf, E. F Schubert, T. D Harris., and R. S. Becker "Photoluminescence of GaAs quantum wells grown by molecular-beam epitaxy with growth interruptions" *Applied Physics Letters* **58**, 631 (1991)

1992

85. W. T. Tsang, E. F. Schubert, and J. E. Cunningham "Doping in semiconductors with variable activation energy: A new concept and demonstration" *Applied Physics Letters* **60**, 115 (1992)
86. E. F. Schubert "Smart doping of III-V semiconductor heterostructure devices" *Proceedings 180th Electrochem. Society Mtg., State-of-the-Art Program on Compound Semiconductors* **92-19**, 85 (1992)
87. E. F. Schubert, L.-W. Tu, G. J. Zydzik, R. F. Kopf, A. Benvenuti, and M. R. Pinto "Elimination of heterojunction band discontinuities by modulation doping" *Applied Physics Letters* **60**, 466 (1992)
88. E. F. Schubert, Y.-H. Wang, A. Y. Cho, L. W. Tu, and G. J. Zydzik "Resonant cavity light emitting diode" *Applied Physics Letters* **60**, 921 (1992)
89. R. F. Kopf, E. F. Schubert, S. W. Downey, and A. B. Emerson "P- and n-type dopant profiles in distributed Bragg reflector structures and their effect on resistance" *Applied Physics Letters* **61**, 1820 (1992)

GF Exhibit 1022 - 161/175

90. E. F. Schubert, A. M. Vredenberg, N. E. J. Hunt, Y. H. Wong, P. C. Becker, J. M Poate., D. C. Jacobson, L. C. Feldman, and G. J. Zydzik "Giant enhancement of luminescence intensity in Er-doped Si/SiO_2 resonant cavities" *Applied Physics Letters* **61**, 1381 (1992)
91. N. E. J. Hunt, E. F. Schubert, R. A Logan., and G. J. Zydzik "Enhanced spectral power density and reduced linewidth at 1.3 μm in an InGaAsP quantum-well resonant-cavity light-emitting diode" *Applied Physics Letters* **61**, 2287 (1992)
92. R. F. Kopf, E. F. Schubert, S. W. Downey, and A. B. Emerson "Resonance ionization of device materials" *Institute of Physics Conference Series* **128**, 255 (1992)
93. N. E. J. Hunt, E. F. Schubert, D. L. Sivco, A. Y. Cho, and G. J. Zydzik "Power and efficiency limits in single mirror light emitting diodes with enhanced intensity" *Electronics Letters* **28**, 2169 (1992)
94. N. E. J. Hunt, E. F. Schubert, R. A. Logan, and G. J. Zydzik "Extremely narrow spectral widths from resonant cavity light-emitting diodes (RCLEDs) suitable for wavelength-division multiplexing at 1.3 μm and 1.55 μm" *Proceedings of the International Electron Devices Meeting (IEDM)* **1992**, 651 (1992)
95. A. M. Vredenberg, N. E. J. Hunt, E. F. Schubert, P. C. Becker, D. C. Jacobson, J. M. Poate, and G. J. Zydzik "Erbium implantation in optical microcavities for controlled spontaneous emission" *Proceedings Ion Implantation Technology - 92*

1993

96. (**Book**) E. F. Schubert "Doping in III-V semiconductors" *Cambridge University Press*, ISBN 0-521-41919-0, 606 pages (1993)
97. E. F. Schubert and R. F. Kopf "Selective n- and p-type C-doping in $Ga_{0.47}In_{0.53}As$ superlattices" *Journal Crystal Growth*. **127**, 1037 (1993)
98. H. Yao, E. F. Schubert, and R. F. Kopf "Raman and ellipsometric studies of delta-doped GaAs" *Materials Research Society Symposium Proceedings* **261**, 57 (1993)
99. (**Invited**) H.-J. Gossmann and E. F. Schubert "Delta doping in silicon" *CRC Critical Reviews in Solid-State and Materials Sciences* **18**, 1 (1993)
100. A. M. Vredenberg, N. E. J. Hunt, E. F. Schubert, D. C. Jacobson, J. M. Poate, and G. J. Zydzik "Controlled atomic spontaneous emission from Er^{3+} in a transparent Si/SiO_2 microcavity" *Physical Review Letters* **71**, 517 (1993)
101. (**Invited**) E. F. Schubert, R. F. Kopf, and T. D. Harris "Interface configurations of AlGaAs /GaAs quantum wells probed by photoluminescence spectroscopy" *Materials Research Society Symposium Proceedings* **280**, 203 (1993)
102. R. F. Kopf, E. F. Schubert, T. D. Harris, R. S. Becker, and G. H. Gilmer "Modification of GaAs/AlGaAs growth-interrupted interfaces through changes in ambient conditions during growth" *Journal of Applied Physics* **74**, 6139 (1993)
103. N. E. J. Hunt, E. F. Schubert, and G. J. Zydzik "A resonant-cavity p-i-n photodetector utilizing an electron-beam evaporated Si/SiO_2 microcavity" *Applied Physics Letters* **63**, 391 (1993)
104. N. E. J. Hunt, E. F. Schubert, R. F. Kopf, D. L. Sivco, A. Y. Cho, and G. J. Zydzik "Increased fiber communications bandwidth from a resonant cavity light emitting diode emitting at λ = 940 nm" *Applied Physics Letters* **63**, 2600 (1993)
105. E. F. Schubert, N. E. J. Hunt, A. M. Vredenberg, T. D. Harris, J. M. Poate, D. C Jacobson., Y. H Wong., and G. J. Zydzik "Enhanced luminescence by resonant absorption in Er-doped Si/SiO_2 microcavities" *Applied Physics Letters* **63**, 2603 (1993)

1994

106. E. F. Schubert, N. E. J. Hunt, M. Micovic, R. J. Malik, D. L. Sivco, A. Y. Cho, and G. J. Zydzik "Highly efficient light-emitting diodes with microcavities" *Science* **265**, 943 (1994)
107. (**Invited**) E. F. Schubert "Delta-doping of semiconductors: electronic, optical, and structural properties of materials and devices" in *Artificially Structured Semiconductors*, Vol. **40**, Ed. by Gossard A. C. in Semiconductors and Semimetals, Editors: Willardson R. K., Beer A. C., and Weber E. R. (1994)
108. (**Invited**) E. F. Schubert, N. E. J. Hunt, D. L. Sivco, and A. Y. Cho "Resonant-cavity light-emitting devices" *Brazilian Journal of Physics*. **24**, 445 (1994)
109. E. F. Schubert, M. Passlack, M. Hong, J. Mannaerts, R. L. Opila, L. N. Pfeiffer, K. W. West, C. G. Bethea, and G. J. Zydzik, "Properties of Al_2O_3 optical coatings on GaAs produced by oxidation of epitaxial AlAs/GaAs films" *Applied Physics Letters* **64**, 2976 (1994)
110. E. F. Schubert, L. Pfeiffer, K. W. West, H. S. Luftman, and G. J. Zydzik "Si delta-doping of 〈011〉 oriented GaAs and AlGaAs grown by molecular beam epitaxy" *Applied Physics Letters* **64**, 2238 (1994)

GF Exhibit 1022 - 162/175

111. M. Passlack, N. E. J. Hunt, E. F. Schubert, G. J. Zydzik, M. Hong, J. P. Mannaerts, R. L. Opila, and R. J. Fischer "Dielectric properties of electron-beam deposited Ga_2O_3 films" *Applied Physics Letters* **64**, 2715 (1994)
112. E. F. Schubert, L. Pfeiffer, K. W. West, H. S. Luftman, and G. J. Zydzik "Si delta-doping of ⟨011⟩-oriented GaAs and AlGaAs grown by molecular-beam epitaxy" *Applied Physics Letters* **64**, 2238 (1994)
113. E. F. Schubert "Doping in III-V semiconductors" *Materials Research Society Proceedings* (1994/1995) Ed. Tu C. W.
114. E. F. Schubert, S. W. Downey, C. Pinzone, and A. B. Emerson "Evidence of very strong inter-epitaxial-layer diffusion in Zn doped GaInPAs/InP structures" *Applied Phys A* June (1995)
115. E. F. Schubert and N. E. J. Hunt "Highly efficient light-emitting diodes with microcavities" *Proceedings of the International Symposium on Compound Semiconductors* (1994/1995)

1995

116. (**Invited**) N. E. J. Hunt, E. F. Schubert, D. L. Sivco, A. Y. Cho, R. F., Kopf Logan R. A., and Zydzik G. J. "High efficiency, narrow spectrum resonant cavity light-emitting diodes" in *Confined Electrons and Photons* Editors: Burstein E. and Weisbuch C. (Plenum Press, New York, 1995)
117. (**Invited**) N. E. J. Hunt, A. M. Vredenberg, E. F. Schubert, P. C. Becker, D. C. Jacobson, J. M. Poate, and G. J. Zydzik "Spontaneous emission control of Er^{3+} in Si/SiO_2 micro-cavities" in *Confined Electrons and Photons*; Editors: E. Burstein and C. Weisbuch (Plenum Press, New York, 1995)
118. M. Passlack, M. Hong, E. F. Schubert, J. R. Kwo, J. P. Mannerts, S. N. G. Chu, N. Moriya, and F. A. Thiel "In situ fabricated Ga_2O_3-GaAs structures with low interface recombination velocity" *Applied Physics Letters* **66**, 625 (1995)
119. E. F. Schubert and N. E. J. Hunt, Ed. H. Goronkin, and U. Mishra "Highly efficient light-emitting diodes with microcavities" *Compound Semiconductors 1994*. Proceedings of the Twenty-First International Symposium, p. xxvii+912, 489 (1995)
120. M. Passlack, M. Hong, E. F. Schubert, J. R. Kwo, J. P. Mannerts, W. S. Hobson, N. Moriya, J. Lopata, and G. J. Zydzik "Ga_2O_3 films for insulator/III-V semiconductor interfaces" *Institute Physics Conference Series No*. **141**: Chapter 5, 597 (1995)
121. M. Passlack, M. Hong, E. F. Schubert, J. P. Mannaerts, W. S. Hobson, N. Moriya, J. Lopata, and G. J. Zydzik, H. Ed. Goronkin and U. Mishra "Ga_2O_3 films for insulator/III-V semiconductor interfaces" *Compound Semiconductors 1994*. Proceedings of the Twenty-First International Symposium, p. xxvii+912, 597 (1995)
122. L.-W. Tu, E. F. Schubert, Y. H. Wang, B. E. Weir, G. J. Zydzik, and A. Y. Cho "Superior output linearity of optimized double heterostructure vertical-cavity top-emitting lasers" *Applied Physics Letters* **66**, 2315 (1995)
123. E. F. Schubert and J. M. Poate "Er-doped Si/SiO_2 microcavities" *Proceedings of the SPIE- The International Society for Optical Engineering* (USA), Vol. **2397**, p. 495 (1995)
124. M. Passlack, C. G. Bethea, W. S. Hobson, J. Lopata, E. F. Schubert, G. J. Zydzik, D. T. Nichols, J. F. de Jong, U. K. Chakrabarti, and N. K. Dutta "Infrared microscopy studies on high-power InGaAs-GaAs-InGaP lasers with Ga_2O_3 facet coatings" *IEEE Journal on Selected Topics Quantum Electronics* **1**, 110 (1995)
125. E. F. Schubert, S. W. Downey, C. Pinzone, and A. B. Emerson "Evidence of very strong inter-epitaxial-layer diffusion in Zn-doped GaInPAs/InP structures" *Applied Physics A* **60**, 525 (1995)
126. E. F. Schubert, C. J. Pinzone, and M. Geva "Phenomenology of Zn diffusion and incorporation in InP grown by organometallic vapor-phase epitaxy" *Applied Physics Letters* **67**, 700 (1995)
127. N. K. Dutta, W. S. Hobson, J. Lopata, E. F. Schubert, and M. Passlack "Single mode, high power lasers emitting at 980 nm" *Proceedings SPIE - Int. Society Opt. Eng*. (USA), Proceedings of the SPIE - The International Society for Optical Engineering, **2382**, 138 (1995)
128. M. Passlack, E. F. Schubert, W. S. Hobson, M. Hong, N. Moriya, S. N. G. Chu, K. Konstadinidis, J. P. Mannaerts, M. L. Schnoes, and G. J. Zydzik "Ga_2O_3 films for electronic and optoelectronic applications" *Journal of Applied Physics* **77**, 686 (1995)

1996

129. (**Book**) E. F. Schubert, Editor "Delta Doping of Semiconductors" 604 pages, Cambridge University Press, Cambridge ISBN 0-521-48288-7 (1996)
130. E. F. Schubert, N. E. J. Hunt, R. J. Malik, M. Micovic, and D. L. Miller "Temperature and Modulation Characteristics of Resonant-Cavity Light-Emitting Diodes" *IEEE J. Lightwave Technology* **14**, 1721 (1996)
131. W. Grieshaber, E. F. Schubert, I. D. Goepfert, R. F. Karlicek Jr., M. J. Schurman, and C. Tran "Competition between band gap and yellow luminescence in GaN and its relevance for optoelectronic devices" *Journal of Applied Physics* **80**, 4615 (1996)
132. L.-W. Tu, E. F. Schubert, M. Hong, and G. J. Zydzik "In-vacuum cleaving and coating of semiconductor laser facts using thin Si and a dielectric" *Journal of Applied Physics* **80**, 6448 (1996)

GF Exhibit 1022 - 163/175

133. E. F. Schubert, W. Grieshaber, and I. D. Goepfert "Enhancement of deep acceptor activation in semiconductors by superlattice doping" *Applied Physics Letters* **69**, 3737 (1996)
134. E. F. Schubert "GaAs light-emitting diodes" in *Gallium Arsenide, 3rd Ed*., edited by Brozel M. R. and Stillman G. E. (INSPEC, The Institution of Electrical Engineers, London, 1996)

1997

135. W. Grieshaber, E. F. Schubert, R. F. Karlicek Jr., M. J. Schurman, and C. Tran "Relevance of the GaN yellow luminescence for light-emitting diodes" *Proceedings SPIE*, "Light-Emitting Diodes: Research, Manufacturing, and Applications" Vol. **3002**, 40 (1997)
136. M. Passlack, M. Hong, E. F. Schubert, G. J. Zydzik, J. P. Mannaerts, W. S. Hobson, and T. D. Harris "Equilibrium and non-equilibrium transport properties of metal - Ga_2O_3-GaAs MOS structures" *Journal of Applied Physics* **81**, 7647 (1997)
137. S. Fan, P. R. Villeneuve, J. D. Joannopoulos, and E. F. Schubert "High extraction efficiency of spontaneous emission from slabs of photonic crystals" *Physical Review Letters*, **78**, 3294 (1997)
138. A. Billeb, W. Grieshaber, D. Stocker, E. F. Schubert, and R. F. Karlicek Jr. "Microcavity effects in GaN epitaxial layers" *Applied Physics Letters* **70**, 2790 (1997)
139. S. Fan, P. R. Villeneuve, J. D. Joannopoulos, and E. F. Schubert "Photonic crystal light emitting diodes" *Proceedings SPIE*, "Light-Emitting Diodes: Research, Manufacturing, and Applications" Vol. **3002**, 67 (1997)
140. L.-W. Tu, E. F. Schubert, M. Hong, and G. J. Zydzik "In-situ cleaving and coating of semiconductor laser facets" *Proceedings of the March Meeting of the American Physical Society*, Kansas, MO, March 17 – 21 (1997)
141. E. F. Schubert, Editor, *SPIE Proceedings Series*, Vol. **3002** "Light-Emitting Diodes: Research, Manufacturing, and Applications" (1997)
142. E. F. Schubert, I. D. Goepfert, W. Grieshaber, and J. M. Redwing "Optical properties of Si-doped GaN" *Applied Physics Letters* **71**, 921 (1997)
143. E. F. Schubert, I. Goepfert, and J. M. Redwing "Evidence of compensating centers as origin of yellow luminescence in GaN" *Applied Physics Letters* **71**, 3224 (1997)
144. T. Peng, J. Piprek, G. Qiu, J. O. Olowolafe, K. M. Unruh, C. P. Swann, and E. F. Schubert "Band gap bowing and refractive index spectra of polycrystalline AlInN films deposited by sputtering" *Applied Physics Letters* **71**, 2439 (1997)
145. Shanhui Fan, P. R. Villeneuve, J. D. Joannopoulos, and E. F. Schubert "High extraction efficiency of spontaneous emission from slabs of photonic crystals" *Physical Review Letters*, **78**, 3294 (1997)
146. D. A. Stocker, E. F. Schubert, W. Grieshaber, J. M. Redwing, K. S. Boutros, J. S. Flynn, and R. P. Vaudo "Fabrication and optical pumping of laser cavities made by cleaving and wet chemical etching" *Material Research Society Conference Proceedings*, Fall (1997)
147. I. D. Goepfert, E. F. Schubert, and J. M. Redwing "Luminescence properties of Si-doped GaN and evidence of compensating defects as the origin of the yellow luminescence" *Mater. Research Society Conference Proceedings*, Fall (1997)
148. I. D. Goepfert, E. F. Schubert, and J. M. Redwing "Luminescence properties of Si-doped GaN and evidence of compensating defects as the origin of the yellow luminescence" *Mater. Research Society Conference Proceedings* Vol. **482**, page 679, Fall (1997)
149. D. A. Stocker, E. F. Schubert, W. Grieshaber, J. M. Redwing, K. S. Boutros, J. S. Flynn, and R. P. Vaudo "Fabrication and optical pumping of laser cavities made by cleaving and wet chemical etching" *Mater. Research Society Conference Proceedings*, Vol. **482**, 1009 (1997)

1998

150. E. F. Schubert and N. E. J. Hunt "15,000 hours stable operation of resonant-cavity light-emitting diodes" *Applied Physics A* **66**, 319 (1998)
151. D. A. Stocker, E. F. Schubert, K. S. Boutros, J. S. Flynn, R. P. Vaudo, V. M. Phanse, and J. M. Redwing "Optically pumped InGaN/GaN double heterostructure lasers with cleaved facets" *Electronics Letters* **34**, 373 (1998)
152. L. W. Tu, Y. C. Lee, D. Stocker, and E. F. Schubert "Spatial distributions of near-band-gap UV and yellow emission on MOCVD grown GaN epifilms" *Physical Review B*, **B58**, p. 10696 (October 1998)
153. L. W. Tu, Y. C. Lee, S. J. Chen, I. Lo, D. Stocker, and E. F. Schubert "Yellow luminescence depth profiling on GaN epifilms using reactive ion etching, *Applied Physics Letters* **73**, 2802 (November 1998)
154. D. A. Stocker, E. F. Schubert, W. Grieshaber, K. S. Boutros, and J. M. Redwing "Facet roughness analysis for InGaN/GaN lasers with cleaved facets" *Applied Physics Letters* **73**, 1925 (October 1998)
155. D. A. Stocker, E. F. Schubert, and J. M. Redwing "Crystallographic wet chemical etching of GaN" *Applied Physics Letters* **73**, 2654 (November 1998)

GF Exhibit 1022 - 164/175

156. E. F. Schubert, W. Grieshaber, K. S. Boutros, and J. M. Redwing "Yellow luminescence in MOCVD-grown n-type GaN" SPIE Proceedings **3279** (edited by E. F. Schubert), 59 (March 1998)
157. D. A. Stocker, E. F. Schubert, W. Grieshaber, K. S. Boutros, J. S. Flynn, R. P. Vaudo, V. M. Phanse, and J. M. Redwing "InGaN/GaN double heterostructure laser with cleaved facets" *Proceedings of the SPIE Photonics West Conference* (March 1998)

1999

158. (**Invited**) E. F. Schubert and N. E. J. Hunt "Enhancement of Spontaneous Emission in Microcavities" in *Vertical-Cavity Surface-Emitting Lasers*, edited by Carl W. Wilmsen, Henryk Temkin, and Larry A. Coldren, ISBN 0 521 59022 1, p. 68 (Cambridge University Press, Cambridge, April 1999)
159. (**Invited**) E. F. Schubert and J. N Miller "Light-Emitting Diodes - An Introduction" *Encyclopedia of Electrical Engineering*, edited by John G. Webster, Vol. **11**, p. 326 (John Wiley and Sons, New York, March 1999)
160. I. D. Goepfert, E. F. Schubert, A. Osinsky, and P. E. Norris "Demonstration of efficient p-type doping in AlGaN/GaN superlattice structures" *Electronics Letters* **35**, 1109 (June 1999)
161. D. A. Stocker, E. F. Schubert, K. S. Boutros, and J. M. Redwing "Fabrication of smooth GaN-based laser facets" *MRS Internet Journal Nitride Semiconductor Research* **4S1**, G7.5 (March 1999)
162. X. Guo, J. W. Graff, and E. F. Schubert "Photon Recycling Semiconductor Light Emitting Diode" *IEDM Technical Digest*, **IEDM-99**, 600 (December 1999)

2000

163. D. A. Stocker, I. D. Goepfert, E. F. Schubert, K. S. Boutros, and J. M. Redwing "Crystallographic wet chemical etching of p-type GaN" *Journal of the Electrochemical Society* **147**, 763 (February 2000)
164. I. D. Goepfert, E. F. Schubert, A. Osinsky, and P. E. Norris "Efficient acceptor activation in AlGaN/GaN doped superlattices" accepted by the *MRS Internet Journal Nitride Semiconductor Research*, *see* http://nsr.mij.mrs.org/5S1/W3.85/ (March 2000)
165. X. Guo, J. W. Graff, E. F. Schubert, and R. F. Karlicek Jr. "Photon Recycling Semiconductor Light Emitting Diode" *SPIE Photonics West Proceedings Series* Vol. **3938**, p. 60 "Light-Emitting Diodes: Research, Manufacturing, and Applications" (March 2000)
166. Y.-L. Li, E. F. Schubert, J. W. Graff, A. Osinsky, and W. F. Schaff "Low-resistance ohmic contacts to p-type GaN" *Applied Physics Letters* **76**, 2728 (May 2000)
167. X. Guo, J. W. Graff, and E. F. Schubert "Photon recycling for high brightness LEDs" *Compound Semiconductors* **6** (4) page 1 (May 2000)
168. J. W. Graff and E. F. Schubert "Flat free-standing silicon diaphragms using silicon-on-insulator (SOI) wafers" *Sensors and Actuators A* **84**, 276 (August 2000)
169. I. D. Goepfert, E. F. Schubert, A. Osinsky, P. E. Norris, and N. N. Faleev "Experimental and theoretical study of acceptor activation and transport properties in *p*-type $Al_xGa_{1-x}N$/GaN superlattices" *Journal of Applied Physics* **88**, 2030 (August 2000)
170. L. Chernyak, A. Osinsky, V. Fuflyigin, and E. F. Schubert "Electron-beam induced increase of electron diffusion length in p-type GaN and AlGaN/GaN superlattices" *Applied Physics Letters* **77**, 875 (August 2000)
171. J. W. Graff, E. F. Schubert, A. Osinsky "On the reduction of base resistance in GaN-based heterojunction bipolar transistors" Proceedings of the 2000 IEEE/Cornell Conference on High-Performance Devices, p. 28, ISBN 0-7803-6381-7 (October 2000)
172. A. Osinsky, V. Fuflyigin, L. D. Zhu, A. B. Goulakov, J. W. Graff, and E. F. Schubert "New concepts and preliminary results for SiC bipolar transistors: $ZnSiN_2$ and $ZnGaN_2$ heterojunction emitters" Proceedings of the 2000 IEEE/Cornell Conference on High-Performance Devices, p. 168, ISBN 0-7803-6381-7 (October 2000)
173. D. A. Stocker, E. F. Schubert, and J. M. Redwing "Optically pumped InGaN/GaN lasers with wet-etched facets" *Applied Physics Letters* **77**, 4253 (December 2000)
174. E. L. Waldron, E. F. Schubert, J. W. Graff, A. Osinsky, M. J. Murphy, and W. F. Schaff "Evidence of polarization effects in doped AlGaN/GaN superlattices" Proceedings of MRS Fall Conference (December 2000)

2001

175. J. W. Graff, E. F. Schubert, and A. Osinsky "GaN/SiC mesa junctions for HBTs fabricated using selective photoelectrochemical etching" *Electronics Letters* **37**, 249 (February 2001)
176. X. Guo, E. F. Schubert, and J. Jahns, "Current crowding and optical saturation effects in GaInN/GaN LEDs grown on insulating substrates" *SPIE Photonics West Proceedings Series*. Vol. 4278, p. 133 "Light-Emitting Diodes: Research, Manufacturing, and Applications" (February 2001)
177. L. Chernyak, A. Osinsky, V. Fuflyigin, J. Graff, and E. F. Schubert "Minority Electron Transport Anisotropy in p-type $Al_xGa_{1-x}N$/GaN Superlattices" *IEEE Transactions on Electron Devices* **48**, 433 (March 2001)

GF Exhibit 1022 - 165/175

178. X. Guo and E. F. Schubert "Current crowding and optical saturation effects in GaInN/GaN light-emitting diodes" *Applied Physics Letters* **78**, 3337 (May 2001)
179. X. Guo, Y.-L. Li, and E. F. Schubert "Efficiency of GaN/InGaN light-emitting diodes with interdigitated mesa geometry" *Applied Physics Letters* **79**, 1936 (Sept. 2001)
180. E. L. Waldron, J. W. Graff, and E. F. Schubert "Improved mobilities and resistivities in modulation doped p-type AlGaN/GaN superlattices" *Applied Physics Letters* **79,** 2737 (October 2001)
181. E. L. Waldron, J. W. Graff, and E. F. Schubert "Influence of doping profiles on p-type AlGaN/GaN superlattices," *Physica Status Solidi* (*A*) **188**, 889 (November 2001)
182. Y.-L. Li, J. W. Graff, E. L. Waldron, T. Gessmann, and E. F. Schubert "Novel polarization enhanced contacts to *n*-type GaN" *Physica Status Solidi (A)* 188, 359 (November 2001)

2002

183. T. Gessmann, Y.-L. Li, E. L. Waldron, J. W. Graff, and E. F. Schubert "Ohmic contacts to p-type GaN mediated by polarization fields in thin InGaN capping layers" *Applied Physics Letters* **80**, 986 (Feb 2002)
184. L. Chernyak, A. Schulte, J. W. Graff, and E. F. Schubert "Influence of electron injection on performance of GaN photodetectors" *Applied Physics Letters* **80**, 926 (Feb 2002)
185. T. Gessmann, Y.-L. Li, E. L. Waldron, and E. F. Schubert "Novel type of ohmic contacts to p-doped GaN using polarization fields in thin $In_xGa_{1-x}N$ capping layers" *Journal of Electronic Materials* **31**, 416 (May 2002)
186. T. Gessmann, J. W. Graff, Y.-L. Li, E. L. Waldron, and E. F. Schubert "Ohmic contact technology in III-V nitrides using polarization effects in cap layers" Proceedings of the *Lester Eastman conference on high-speed devices* (Sep 2002)
187. T. Gessmann, J. W. Graff, Y.-L. Li, E. L. Waldron, and E. F. Schubert "Ohmic contacts to III-V nitrides using polarization effects of cap layers" *Journal of Applied Physics* **92**, 3740 (October 2002)

2003

188. E. L. Waldron, E. F. Schubert, and A. M. Dabiran "Multisubband photoluminescence in p-type modulation-doped AlGaN/GaN superlattices" *Physical Review B* **67**, 045327 (January 2003)
189. (**Book**), E. F. Schubert "Light-emitting diodes" 328 pages, 154 line diagrams, 21 half-tones, 21 tables, Hardback ISBN: 0521823307 Paperback ISBN: 0521533511 (Cambridge University Press, Cambridge UK, May 2003)
190. T. Gessmann, Y.-L. Li, E. F. Schubert, J. W. Graff, and J. K. Sheu "GaInN light-emitting diodes with omni-directional reflectors", *SPIE Proceedings Series* **4996** "Light Emitting Diodes: Research, Manufacturing, and Applications VII" p. 26 (July 2003)
191. T. Gessmann, E. F. Schubert, J. W. Graff, and K. Streubel "AlGaInP light-emitting diodes with omni-directionally reflecting submount", *SPIE Proceedings Series* **4996** "Light Emitting Diodes: Research Manufacturing, and Applications VII" p. 139 (July 2003)
192. E. F. Schubert, K. J. Linden, H. Yao, D. J. McGraw (Editors) "Light-Emitting Diodes: Research, Manufacturing, and Applications VII" *SPIE Proceedings Series* **4996**, SPIE-International Society for Optical Engineering ISBN: 081944796X Paperback, 278pp (July 2003)
193. Y.-L. Li, T. Gessmann, E. F. Schubert, and J. K. Sheu "Carrier dynamics in nitride-based light-emitting p-n junction diodes with two active regions emitting at different wavelengths" *Journal of Applied Physics* **94**, 2167 (August 2003)
194. J. M. Shah, Y.-L. Li, T. Gessmann, and E. F. Schubert "Experimental analysis and theoretical model for anomalously high ideality factors ($n >> 2.0$) in AlGaN/GaN p-n junction diodes" *Journal Applied Physics* **94,** 2627 (August 2003)
195. T. Gessmann, E. F. Schubert, J. W. Graff, K. Streubel, and C. Karnutsch "Omni-directionally reflective contacts for light-emitting diodes" *IEEE Electron Devices Letters* **24**, 683 (November 2003)
196. E. L. Waldron, Y.-L. Li, E. F. Schubert, J. W. Graff, and J. K. Sheu "Experimental study of perpendicular transport in weakly coupled $Al_xGa_{1-x}N$/GaN superlattices and theoretical model based on sequential tunneling" accepted for publication in *Applied Physics Letters* **83**, 4975 (2003)

2004

197. J. M. Shah, Y. Li, T. Gessmann, and E. F. Schubert "Experimental analysis and a new theoretical model for anomalously high ideality factors ($n >> 2.0$) in GaN-based p-n junction diodes" *Mater. Research Society Symposium Proceedings* **798**, 113 (January 2004)
198. T. Gessmann, H. Luo, J.-Q. Xi, K. P. Streubel, and E. F. Schubert "Light-emitting diodes with integrated omnidirectionally reflective contacts" *Proceedings of SPIE "Light-emitting diodes: Research, Manufacturing and Applications VIII*" **5366**, 53 (January 2004)

GF Exhibit 1022 - 166/175

199. T. Gessmann and E. F. Schubert "High-efficiency AlGaInP light-emitting diodes for solid-state lighting applications" *Journal of Applied Physics* **95**, 2203 (March 2004)
200. J. K. Kim, E. L. Waldron, Y.-L. Li, T. Gessmann, E. F. Schubert, H. W. Jang, and J.-L. Lee "P-type conductivity in bulk $Al_xGa_{1-x}N$ and $Al_xGa_{1-x}N/Al_yGa_{1-y}N$ superlattices with average Al mole fraction > 20 %" *Applied Physics Letters* **84**, 3310 (May 2004)
201. J. K. Kim, T. Gessmann, H. Lu, and E. F. Schubert "GaInN light-emitting diodes with $RuO_2/SiO_2/Ag$ omni-directional reflector" *Applied Physics Letters* **84**, 4508 (May 2004)
202. Y.-L. Li, J. M. Shah, P.-H. Leung, T. Gessmann, and E. F. Schubert, "Performance characteristics of white light sources consisting of multiple light-emitting diodes" *Proceedings of the SPIE - The International Society for Optical Engineering* **5187**, 178 (August 2004)
203. Y. Xi and E. F. Schubert "Junction-temperature measurement in GaN ultraviolet light-emitting diodes using diode forward-voltage method" *Applied Physics Letters* **85**, 2163 (Sept. 2004)
204. Y. Xi and E. F. Schubert "Junction-temperature measurement in GaN UV light-emitting diodes using the diode forward voltage" *2004 Proceedings of the Lester Eastman Conference on High-Performance Devices – Selected Topics in Electronics and Systems* edited by Robert E. Leoni III, Vol. **35**, p. 84 (December 2004)
205. J.-Q. Xi, M. Ojha, W. Cho, T. Gessmann, E. F. Schubert, J. L. Plawsky, and W. N. Gill "Omni-directional reflector using a low refractive index material" *2004 Proceedings of the Lester Eastman Conference on High-Performance Devices – Selected Topics in Electronics and Systems* edited by Robert E. Leoni III, Vol. **35**, p. 102 (December 2004)
206. (**Invited**) J. K. Kim, J. Q. Xi, H. Luo, T. Gessmann, and E. F. Schubert "High-Reflectivity Omni-Directional Reflectors for Light-Emitting Diodes" *Proceedings of the IEDMS* (December 2004)

2005

207. Y. Xi, J.-Q. Xi, T. Gessmann, J. M. Shah, J. K. Kim, E. F. Schubert, A. J. Fischer, M. H. Crawford, K. H. A. Bogart, and A. A. Allerman "Junction and carrier temperature measurements in deep-ultraviolet light-emitting diodes using three different methods" *Applied Physics Letters* **86**, 031907 (January 2005)
208. Y. Xia, E. Williams, Y. Park, I. Yilmaz, J. M. Shah, E. F. Schubert, and C. Wetzel "Discrete steps in the capacitance-voltage characteristics of GaInN/GaN light-emitting diode structures" in "GaN, AlN, InN, and Their Alloys", edited by C. Wetzel, B. Gil, M. Kuzuhara, and M. Manfra, *Materials Research Society (MRS) Symposium Proceedings* **831**, E3.38 (MRS, Warrendale PA, January 2005)
209. Y. Xi, J.-Q. Xi, T. Gessmann, J. M. Shah, J. K. Kim, E. F. Schubert, A. J. Fischer, M. H. Crawford, K. H. A. Bogart, and A. A. Allerman "Junction temperature measurements in deep-UV light-emitting diodes" in "GaN, AlN, InN and Their Alloys" edited by C. Wetzel, B. Gil, M. Kuzuhara, and M. Manfra, *Materials Research Society (MRS) Symposium Proceedings* **831**, E1.7 (MRS, Warrendale PA, January 2005)
210. S. Chhajed, Y. Xi, Y.-L. Li, T. Gessmann, and E. F. Schubert "Influence of junction temperature on luminous efficacy and color rendering properties of a trichromatic LED-based white light source" *Journal of Applied Physics* **97**, 054506 (February 2005)
211. (**Invited**) J. K. Kim, H. Luo, Y. Xi, J. M. Shah, T. Gessmann, and Schubert E. F. "Enhancement of light extraction in GaInN light-emitting diodes by diffuse omni-directional reflectors" *Proceedings of the Second Asia-Pacific Workshop on Wide-gap Semiconductors* (APWS-2005) Hsinchu Lakeshore Hotel, Hsinchu, Taiwan, March 7–9 (March 2005)
212. M. Furis, A. N. Cartwright, E. L. Waldron, and E. F. Schubert "Spectral and temporal resolution of recombination from multiple excitation states in modulation-doped AlGaN/GAN MQW heterostructures" *Applied Physics Letters* **86**, 162103 (April 2005)
213. (**Invited**) E. F. Schubert and J. K. Kim "Solid-state light sources getting smart" *Science* **308**, 1274 (May 2005)
214. J.-Q. Xi, M. Ojha, W. Chow, C. Wetzel, T. Gessmann, E. F. Schubert, J. L. Plawsky, and W. N. Gill "Omni-directional reflector using a low refractive index material" *Proceedings of the Conference on Lasers and Electrooptics* (CLEO), Baltimore MD, May 22-27 (May 2005)
215. J. K. Kim, H. Luo, E. F. Schubert, J. Cho, C. Sone, and Y. Park "Strongly enhanced phosphor efficiency in GaInN white light-emitting diodes using remote phosphor configuration and diffuse reflector cup" *Japanese Journal Applied Physics – Express Letter* **44**, L 649 (May 2005)
216. H. Luo, J. K. Kim, E. F. Schubert, J. Cho, C. Sone, and Y. Park "Analysis of high-power packages for phosphor-based white-light-emitting diodes" *Applied Physics Letters* **86**, 243505 (June 2005)
217. J.-Q. Xi, M. Ojha, W. Cho, J. L. Plawsky, W. N. Gill, T. Gessmann, and E. F. Schubert "Omnidirectional reflector using nanoporous SiO_2 as a low-refractive-index material" *Optics Letters* **30,** 1518 (June 2005)
218. J.-Q. Xi, J. K. Kim, and E. F. Schubert "Silica nanorod-array films with very low refractive indices" *Nano Letters* **5**, 1385 (July 2005)

GF Exhibit 1022 - 167/175

219. (**Invited**) E. F. Schubert, J. K. Kim, and T. Gessmann "Light-emitting diodes" *Kirk-Othmer Encyclopedia of Chemical Technology*; on-line access at < www.mrw.interscience.wiley.com/kirk/ > (John Wiley and Sons and Wiley Inter-Science, New York NY, July 2005)
220. J.-Q. Xi, M. Ojha, J. L. Plawsky, W. N. Gill, J. K. Kim, and E. F. Schubert "Internal high-reflectivity omni-directional reflectors" *Applied Physics Letters* **87**, 031111 (July 2005)
221. (**Invited**) E. F. Schubert and T. Gessmann "Light-emitting diodes" published in "*Elsevier Encyclopedia of Condensed Matter Physics*" edited by F. Bassani, J. Liedl, and P. Wyder (Elsevier, Amsterdam, Netherlands, September 2005)
222. Y. Xi, T. Gessmann, J.-Q. Xi, J. K. Kim, J. M. Shah, E. F. Schubert, A. J. Fischer, M. H. Crawford, K. H. A. Bogart, A. A. Allerman "Junction temperature in ultraviolet light-emitting diodes" Special Issue on Ultraviolet Semiconductor Sources, *Japanese Journal of Applied Physics* **44**, 7260 (October 2005)
223. J.-Q. Xi, J. K. Kim, and E. F. Schubert "Low-refractive-index material with oblique-angle deposition" *LEOS Newsletter* Vol. **19** No. 6, page 10 (December 2005)
224. (**Invited**) E. F. Schubert, T. Gessmann, and J. K. Kim, "Inorganic semiconductors for light-emitting diodes" in *Organic Light-Emitting Devices, Synthesis, Properties, and Applications* edited by K. Müllen and U. Scherf, ISBN 3-527-31218-8 (Wiley VCH, New York, USA, 2006)
225. (**Invited**) E. F. Schubert, J. K. Kim, J.-Q. Xi, and H. Luo "Innovations in Light-emitting devices" in *The Physics of Semiconductor Devices* edited by V. Kumar, S. K. Agarwal, and S. N. Singh (Allied Publishers PVT. Limited, New Delhi, India, 2005)
226. J. K. Kim, J.-Q. Xi, H. Luo, J. Cho, C. Sone, Y. Park, and E. F. Schubert "Enhancement of light extraction in GaN light-emitting diodes by omnidirectional reflectors with ITO nanorod low-refractive-index layer" *Proceedings SPIE, Illumination Engineering, Fifth International Conference on Solid-State Lighting*, Vol. **5941**, page 5941 0K-1 – 6 (2005)

2006

227. J. K. Kim, T. Gessmann, E. F. Schubert, J.-Q. Xi, H. Luo, J. Cho, C. Sone, Y. Park "GaInN light-emitting diode with conductive omnidirectional reflector having a low-refractive index indium-tin oxide (ITO) layer" *Applied Physics Letters* **88**, 013501 (January 2006)
228. J. K. Kim, H. Luo, Y. Xi, J. M. Shah, T. Gessmann, and E. F. Schubert "Light extraction in GaInN light-emitting diodes using diffuse omnidirectional reflectors" *Journal of the Electrochemical Society* **153**, G105 (January 2006)
229. (**Invited**) J. K. Kim, J.-Q. Xi, E. F Schubert "Omni-directional reflectors for light-emitting diodes" *Light-Emitting Diodes: Research, Manufacturing, and Applications X, Proceedings of SPIE* **6134**, 61340D-1 (January 2006)
230. J. K. Kim, J.-Q. Xi, H. Luo, Jaehee Cho, Cheolsoo Sone, Yongjo Park, T. Gessmann, John M. Zavada, H. X. Jiang, and E. F Schubert, "GaN light-emitting triodes (LETs) for high-efficiency hole-injection and light emission" *Light-Emitting Diodes: Research, Manufacturing, and Applications X, Proceedings of SPIE* **6134**, 61340K-1 (January 2006)
231. J.-Q. Xi, J. K. Kim, E. F. Schubert, D. Ye, T.-M. Lu, S.-Y. Lin, and J. S. Juneja "Very low-refractive-index optical thin films consisting of an array of SiO_2 nanorods" *Optics Letters* **31**, 601 (March, 2006)
232. J. M. Shah, T. Gessmann, H. Luo, Y. Xi, K. Chen, J. K. Kim, and E. F. Schubert "Reduction of base access resistance in AlGaN/GaN heterojunction bipolar transistors using GaInN base cap layer and selective epitaxial growth" *Materials Research Society (MRS) Symposium Proceedings* Vol. **892**, page 0892-FF13-10.1 (March 2006)
233. F. Shahedipour-Sandvik, E. F. Schubert, B. K. Crone, H. Liu, Y-K. Su (editors) "Solid-State Lighting Materials and Devices" Symposium DD *Materials Research Society (MRS) Proceedings Volume 916* (May 2006)
234. C. W. Litton, D. Johnstone, S. Akarca-Biyikli, K. S. Ramaiah, I. Bhat, T. P. Chow, J. K. Kim, and E. F. Schubert "Effect of C/Si ratio on deep levels in epitaxial 4H–SiC" *Applied Physics Letters* **88**, 121914 (April 2006)
235. J. K. Kim, E. F. Schubert, Jaehee Cho, Cheolsoo Sone, J. Y. Lin, H. X. Jiang, and John M. Zavada "GaN light-emitting triode (LET) for high-efficiency hole injection" *Journal of The Electrochemical Society* **153**, G734 (June 2006)
236. (**Book**) E. F. Schubert "Light-emitting diodes, second edition" 422 pages, 255 line diagrams, 32 half-tones, 30 exercises, 287 figures, Hardback ISBN-13: 9780521865388 (Cambridge University Press, Cambridge UK, June 2006)
237. H. Luo, J. K. Kim, Y. A. Xi, E. F. Schubert, J. Cho, C. Sone, and Y. Park "Trapped whispering-gallery optical modes in white light-emitting diode lamps with remote phosphor" *Applied Physics Letters* **89**, 041125 (July 2006)

GF Exhibit 1022 - 168/175

238. Y. Andrew Xi, Xiaolu Li, J. K. Kim, F. Mont, T. Gessmann, Hong Luo, and E. F Schubert "Quantitative assessment of diffusivity and specularity of surface-textured reflectors for light extraction in light-emitting diodes" *Journal of Vacuum Science and Technology* **A 24**, 1627 (July 2006)
239. Y. A. Xi, K. X. Chen, F. Mont, J. K. Kim, C. Wetzel, E. F. Schubert, W. Liu, X. Li, and J. A. Smart "Very high quality AlN grown on (0001) sapphire by metal-organic vapor phase epitaxy" *Applied Physics Letters* **89**, 103106 (September 2006)
240. J. K. Kim, J.-Q. Xi, H. Luo, Schubert E. F., Jaehee Cho, Cheolsoo Sone and Yongjo Park "Enhanced light-extraction in GaInN near-ultraviolet light-emitting diode with Al-based omnidirectional reflector having NiZn/Ag microcontacts" *Applied Physics Letters* **89**, 141123 (October 2006)
241. J.-Q. Xi, Luo Hong, A.J. Pasquale, Jong Kyu Kim, and E. F Schubert "Enhanced light extraction in GaInN light-emitting diode with pyramid reflector" *IEEE Photonics Technology Letters* **18***,* 2347 (November 2006)
242. (**Invited**) E. F. Schubert, J. K. Kim, H. Luo, and J.-Q. Xi "Solid-state lighting – A benevolent technology" *Reports on Progress in Physics* **69**, 3069 (November 2006)

2007

243. Frank W. Mont, J. K. Kim, M. F. Schubert, H. Luo, E. F. Schubert, and R. W. Siegel "High refractive index nanoparticle-loaded encapsulants for light-emitting diodes" *Proceedings SPIE* **6486**, 64861C (February 2007)
244. F. W. Mont, H. Luo, M. F. Schubert, J. K. Kim, E. F. Schubert, and R. W. Siegel, "Nanoparticle-loaded encapsulation materials for light-emitting diode applications" *Materials Research Society Symposium Proceedings* **955**, I13-02 (January 2007)
245. J.-Q. Xi, Hong Luo, Jong Kyu Kim, and E. F. Schubert "High light-extraction efficiency in GaInN light-emitting diode with pyramid reflector" *SPIE Photonics West*, *Proceedings SPIE* **6486**, 648606, San Jose, CA, January 20 – 25 (January 2007)
246. Y. Andrew Xi, K. X. Chen, F. W. Mont, J. K. Kim, W. Lee, E. F. Schubert, W. Liu, X. Li, and J. A. Smart "Kinetic study of Al-mole fraction in $Al_xGa_{1-x}N$ grown on c-plane sapphire and AlN bulk substrates by metal-organic vapor-phase epitaxy" *Applied Physics Letters* **90**, 051104 (January 2007)
247. Y. Andrew Xi, K. X. Chen, F. Mont, J. K. Kim, E. F. Schubert, W. Liu, X. Li, J. A. Smart "Comparative study of n-type AlGaN grown on sapphire by using a superlattice layer and a low-temperature AlN interlayer" *Journal of Crystal Growth* **299**, 59–62 (January 2007)
248. J.-Q. Xi, Martin F. Schubert, J. K. Kim, E. Fred Schubert, Minfeng Chen, Shawn-Yu Lin, Wayne Liu, and Joe A. Smart "Optical thin-film materials with low refractive index for broadband elimination of Fresnel reflection" *Nature Photonics* **1**, 176 (March 2007)
249. Martin. F. Schubert, J.-Q. Xi, J. K. Kim, and E. F Schubert "Distributed Bragg reflector consisting of high- and low-refractive-index thin film layers made of the same material" *Applied Physics Letters* **90**, 141115 (April 2007)
250. Y. Andrew Xi, K. X. Chen, F. W. Mont, J. K. Kim, E. F. Schubert, C. Wetzel, W. Liu, X. Li, and J. A. Smart "Optimization of high-quality AlN epitaxially grown on (0001) sapphire by metal-organic vapor-phase epitaxy" *Journal of Electronic Materials* (Special Issue) **36**, 533 (DOI: 10.1007/s11664-007-0099-3) (May 2007)
251. Kaixuan X. Chen, Y. A. Xi, F. W. Mont, J. K. Kim, E. F. Schubert, W. Liu, X. Li, and J. A. Smart "Recombination dynamics in ultraviolet light-emitting diodes with Si-doped $Al_xGa_{1-x}N/Al_yGa_{1-y}N$ multiple quantum well active regions" *Journal of Applied Physics* **101**, 113102 (June 2007)
252. Martin F. Schubert, Sameer Chhajed, Jong Kyu Kim, E. Fred Schubert, and Jaehee Cho "Polarization of light emission by 460 nm GaInN/GaN light-emitting diodes grown on (0001) oriented sapphire substrates" *Applied Physics Letters* **91**, 051117 (August 2007)
253. Martin F. Schubert, Ahmed Noemaun, Sameer Chhajed, Jong Kyu Kim, E. Fred Schubert, and Cheolsoo Sone "Encapsulation shape with non-rotational symmetry designed for extraction of polarized light from unpolarized sources" *Optics Express* **15***,* 10452 (August 2007)
254. (**Invited**) E. Fred Schubert and Jong Kyu Kim "Low-refractive index materials: A new class of optical thin-film materials" *Physica Status Solidi B* **244**, 3002 (DOI: 10.1002/pssb.200675603) (August 2007)
255. Kaixuan X. Chen, Q. Dai, W. Lee, J. K. Kim, E. F. Schubert, W. Liu, S. Wu, X. Li, and J. A. Smart "Parasitic sub-band-gap emission originating from compensating native defects in Si doped AlGaN" *Applied Physics Letters* **91**, 121110 (September 2007)
256. Martin F. Schubert, Sameer Chhajed, Jong Kyu Kim, E. Fred Schubert, and Jaehee Cho "Linearly polarized emission from GaInN light-emitting diodes with polarization-enhancing reflector" *Optics Express* **15**, 11213 (September 2007)
257. (**Invited**) E. F. Schubert, J. K. Kim, and J.-Q. Xi "Light-emitting diodes hit the centenary milestone" *Compound Semiconductors* October issue, page 20–23 (October 2007)

GF Exhibit 1022 - 169/175

258. Min-Ho Kim, Martin F. Schubert, Qi Dai, Jong Kyu Kim, E. Fred Schubert, Joachim Piprek, and Yongjo Park "Origin of efficiency droop in GaN-based light-emitting diodes" *Applied Physics Letters* **91**, 183507 (October 2007)
259. Martin F. Schubert, Sameer Chhajed, Jong Kyu Kim, E. Fred Schubert, Daniel D. Koleske, Mary H. Crawford, Stephen R. Lee, Arthur J. Fischer, Gerald Thaler "Effect of dislocation density on efficiency droop in GaInN/GaN light-emitting diodes" *Applied Physics Letters* **91**, 231114 (December 2007)

2008

260. Jong Kyu Kim, S. Chhajed, M. F. Schubert, E. F. Schubert, A. J. Fischer, M. H. Crawford, J. Cho, H. Kim, and C. Sone "Light-extraction enhancement of GaInN light-emitting diodes by graded-refractive-index indium tin oxide anti-reflection contact" *Advanced Materials* **20**, 801 (March 2008)
261. Frank W. Mont, Jong Kyu Kim, Martin F. Schubert, E. Fred Schubert, and Richard W. Siegel "High-refractive-index TiO_2-nanoparticle-loaded encapsulants for light-emitting diodes" *Journal of Applied Physics* **103**, 083120 (April 2008)
262. Martin F. Schubert, Frank W. Mont, Sameer Chhajed, David J. Poxson, Jong Kyu Kim, and E. Fred Schubert "Design of multilayer antireflection coatings made from co-sputtered and low-refractive-index materials by genetic algorithm" *Optics Express* Vol. **16**, 5290 (April 2008)
263. Martin F. Schubert, Jiuru Xu, Jong Kyu Kim, E. Fred Schubert, Min Ho Kim, Sukho Yoon, Soo Min Lee, Cheolsoo Sone, Tan Sakong, and Yongjo Park "Polarization-matched GaInN/AlGaInN multi-quantum-well light-emitting diodes with reduced efficiency droop" *Applied Physics Letters* **93**, 041102 (July 2008)
264. David J. Poxson, Frank W. Mont, Martin F. Schubert, Jong Kyu Kim, and E. Fred Schubert "Quantification of porosity and deposition rate of nano-porous films grown by oblique-angle deposition" *Applied Physics Letters* **93**, 101914 (September 2008)
265. Mei-Ling Kuo, David J. Poxson, Yong Sung Kim, Frank W. Mont, Jong Kyu Kim, E. Fred Schubert, and Shawn-Yu Lin "Realization of a near-perfect antireflection coating for silicon solar energy utilization" *Optics Letters* **33**, 2527 (October 2008)
266. Jong Kyu Kim, Ahmed N. Noemaun, Frank W. Mont, David Meyaard, E. Fred Schubert, David J. Poxson, Hyunsoo Kim, Cheolsoo Sone, and Yongjo Park "Elimination of total internal reflection in GaInN light-emitting diodes by graded-refractive-index micropillars" *Applied Physics Letters* **93**, 221111 (November 2008)
267. Sameer Chhajed, Martin F. Schubert, Jong Kyu Kim, and E. Fred Schubert "Nanostructured multilayer graded-index antireflection coating for Si solar cells with broadband and omnidirectional characteristics" *Applied Physics Letters* **93**, 251108 (November 2008)
268. K. X. Chen, Q. Dai, W. Lee, J. K. Kim, E. F. Schubert, J. Grandusky, M. Mendrick, X. Li, and J. A. Smart "Effect of dislocations on electrical and optical properties of n-type $Al_{0.34}Ga_{0.66}N$" *Applied Physics Letters* **93**, 192108 (November 2008)
269. Jong Kyu Kim and E. Fred Schubert "Transcending the replacement paradigm of solid-state lighting" *Optics Express* **16**, 21835 (December 2008)

2009

270. Jiuru Xu, Martin F. Schubert, Ahmed N. Noemaun, Di Zhu, Jong Kyu Kim, E. Fred Schubert, Min Ho Kim, Hun Jae Chung, Sukho Yoon, Cheolsoo Sone, and Yongjo Park "Reduction in efficiency droop, forward voltage, ideality factor, and wavelength shift in polarization-matched GaInN/GaInN multi-quantum-well light-emitting diodes" *Applied Physics Letters* **94**, 011113 (January 2009)
271. Di Zhu, Jiuru Xu, Ahmed N. Noemaun, Jong Kyu Kim, E. Fred Schubert, Mary H. Crawford, and Daniel D. Koleske, "The origin of the high diode-ideality factors in GaInN/GaN multiple quantum well light-emitting diodes" *Applied Physics Letters* **94**, 081113 (February 2009)
272. Martin F. Schubert, Jiuru Xu, Qi Dai, Frank W. Mont, Jong Kyu Kim, and E. Fred Schubert "On resonant optical excitation and carrier escape in GaInN/GaN quantum wells" *Applied Physics Letters* **94**, 081114 (February 2009)
273. Qi Dai, M. F. Schubert, M. H. Kim, J. K. Kim, E. F. Schubert, D. D. Koleske, M. H. Crawford, S. R. Lee, A. J. Fischer, G. Thaler, and M. A. Banas "Internal quantum efficiency and nonradiative recombination coefficient of GaInN / GaN multiple quantum wells with different dislocation densities" *Applied Physics Letters* **94**, 111109 (March 2009)
274. David J. Poxson, Martin F. Schubert, Frank W. Mont, E. F. Schubert, and Jong Kyu Kim "Broadband omnidirectional antireflection coatings optimized by genetic algorithm" *Optics Letters* **34**, 728 (March 2009)
275. Roya Mirhosseini, Martin F. Schubert, Sameer Chhajed, Jaehee Cho, Jong Kyu Kim, and E. Fred Schubert "Improved color rendering and luminous efficacy in phosphor-converted white light-emitting diodes by use of dual-blue emitting active regions" *Optics Express* **17**, 10806 (June 2009)

GF Exhibit 1022 - 170/175

276. Martin F. Schubert, Qi Dai, Jiuru Xu, Jong Kyu Kim, and E. Fred Schubert "Electroluminescence induced by photoluminescence excitation in GaInN/GaN light-emitting diodes" *Applied Physics Letters* **95**, 191105 (November 2009)
277. Jong Kyu Kim and E. Fred Schubert "Enhancement in light-extraction efficiency of GaN-based light-emitting diodes" in *Advanced Semiconductor Materials and Devices Research: III-Nitrides and SiC*; edited by H-Y Cha (Transworld Research Network, Kerala, India, 2009)

2010

278. J. Cho, A. Mao, J. K. Kim, J. K. Son, Y. Park and E. F. Schubert "Analysis of reverse tunneling current in GaInN light-emitting diodes" *Electronics Letters* **46**, 156 (January 2010)
279. M. Ojha, A. Chatterjee, F. Mont, E. F. Schubert, P. C. Wayner Jr., and J. L. Plawsky "The role of solid surface structure on dropwise phase change processes" *International Journal of Heat and Mass Transfer* **53**, 910 (February 2010)
280. Wonseok Lee, Min-Ho Kim, Di Zhu, Ahmed N. Noemaun, Jong Kyu Kim, and E. F. Schubert "Growth and characteristics of GaInN/GaInN multiple quantum well light-emitting diodes" *Journal of Applied Physics* **107**, 063102 (March 2010)
281. Di Zhu, Ahmed N. Noemaun, Martin F. Schubert, Jaehee Cho, E. Fred Schubert, Mary H. Crawford, and Daniel D. Koleske "Enhanced electron capture and symmetrized carrier distribution in GaInN light-emitting diodes having tailored barrier doping" *Applied Physics Letters* **96**, 121110 (March 2010)
282. Martin F. Schubert and E. Fred Schubert "Effect of heterointerface polarization charges and well width upon capture and dwell time for electrons and holes above GaInN/GaN quantum wells" *Applied Physics Letters* **96**, 131102 (March 2010)
283. Martin F. Schubert, David J. Poxson, Frank W. Mont, and E. Fred Schubert "Performance of anti-reflection coatings consisting of multiple discrete layers and comparison with continuously graded anti-reflection coatings" *Applied Physics Express* **3**, 082502 (August 2010)
284. Ming Ma, Frank W. Mont, David J. Poxson, Jaehee Cho, E. Fred Schubert, Roger E. Welser, and Ashok K. Sood "Enhancement of photovoltaic cell response due to high-refractive-index encapsulants" *Journal of Applied Physics* **108**, 043102 (August 2010)
285. Qi Dai, Qifeng Shan, Jing Wang, Sameer Chhajed, Jaehee Cho, E. Fred Schubert, Mary H. Crawford, Daniel D. Koleske, Min-Ho Kim, and Yongjo Park "Carrier recombination mechanisms and efficiency droop in GaInN/GaN light-emitting diodes" *Applied Physics Letters* **97**, 133507 (September 2010)
286. David J. Poxson, Frank W. Mont, Martin F. Schubert, Jong Kyu Kim, Jaehee Cho, and E. Fred Schubert "Demonstration of optical interference filters utilizing tunable refractive index layers" *Optics Express* **18**, A594 (October 2010)
287. Qifeng Shan, Qi Dai, Sameer Chhajed, Jaehee Cho, and E. Fred Schubert "Analysis of thermal properties of GaInN light-emitting diodes and laser diodes" *Journal of Applied Physics* **108**, 084504 (October 2010)

2011

288. Ann Mao, Jaehee Cho, Qi Dai, and E. Fred Schubert, Joong Kon Son, and Yongjo Park "Characteristics of dot-like green satellite emission in GaInN light-emitting diodes" *Applied Physics Letters* **98**, 023503 (January 2011)
289. Sameer Chhajed, Jaehee Cho, E. Fred Schubert, Jong Kyu Kim, Daniel D. Koleske, and Mary H. Crawford "Temperature-dependent light-output characteristics of GaInN light-emitting diodes with different dislocation densities" *Physica Status Solidi (A)* **208**, 947 (January 2011)
290. Qi Dai, Qifeng Shan, Jaehee Cho, E. Fred Schubert, Mary H. Crawford, Daniel D. Koleske, Min-Ho Kim, and Yongjo Park "On the symmetry of efficiency-versus-carrier-concentration curves in GaInN/GaN light-emitting diodes and relation to droop-causing mechanisms" *Applied Physics Letters* **98**, 033506 (January 2011)
291. Sameer Chhajed, Wonseok Lee, Jaehee Cho, E. Fred Schubert, and Jong Kyu Kim "Strong light-extraction enhancement in GaInN light-emitting diodes by using self-organized nanoscale patterning of p-type GaN" *Applied Physics Letters* **98**, 071102 (February 2011)
292. Roger E. Welser, Adam W. Sood, Ashok K. Sood, David J. Poxson, Sameer Chhajed, Jaehee Cho, E. Fred Schubert, Dennis L. Polla, and Nibir K. Dhar "Ultra-High Transmittance through Nanostructure-Coated Glass for Solar Cell Applications" *Proceedings of the SPIE* **8035**, 80350X (May 2011)
293. Xing Yan, Frank W. Mont, David J. Poxson, Jaehee Cho, E. Fred Schubert, Min-Ho Kim, and Cheolsoo Sone "Electrically conductive thin-film color filters made of single-material – indium-tin-oxide" *Journal of Applied Physics* **109**, 103113 (May 2011)

GF Exhibit 1022 - 171/175

294. Sameer Chhajed, David J. Poxson, Xing Yan, Jaehee Cho, E. Fred Schubert, Roger E. Welser, Ashok K. Sood, and Jong Kyu Kim "Nanostructured Multilayer Tailored-Refractive-Index Antireflection Coating for Glass with Broadband and Omnidirectional Characteristics" *Applied Physics Express* **4**, 052503 (May 2011)
295. David J. Poxson, Mei-Ling Kuo, Frank W. Mont, Y.-S. Kim, Xing Yan, Roger E. Welser, Ashok K. Sood, Jaehee Cho, Shawn-Yu Lin, and E. Fred Schubert "High-performance anti-reflection coatings utilizing nanoporous layers" *MRS Bulletin* **36**, 434 (June 2011)
296. Guan-Bo Lin, Martin F. Schubert, Jaehee Cho (SID Member), E. Fred Schubert, Hyungkun Kim "A complementary matching technique to reduce the variance of optical and electrical properties of light-emitting diodes" *Journal of the SID* **19/6**, 431 (June 2011)
297. David S. Meyaard, Qifeng Shan, Qi Dai, Jaehee Cho, E. Fred Schubert, Min-Ho Kim, and Cheolsoo Sone "On the temperature dependence of electron leakage from the active region of GaInN/GaN light-emitting diodes" *Applied Physics Letters* **99**, 041112 (July 2011)
298. Ahmed N. Noemaun, Frank W. Mont, Guan-Bo Lin, Jaehee Cho, E. Fred Schubert, Gi Bum Kim, Cheolsoo Sone, and Jong Kyu Kim "Optically functional surface composed of patterned graded-refractive-index coatings to enhance light-extraction of GaInN light-emitting diodes" *Journal of Applied Physics* **110**, 054510 (September 2011)
299. Roger E. Welser, Gopal G. Pethuraja, Ashok K. Sood, Oleg A. Laboutin, Mark Chaplin, Van Un, Wayne Johnson, Adam W. Sood, David J. Poxson, Jaehee Cho, E. Fred Schubert, Pradeep Haldar, Jennifer L. Harvey "High voltage quantum well waveguide solar cells" *Proceedings of the SPIE* Vol. **8111**, page 81110I-1 (September 2011)
300. David S. Meyaard, Guan-Bo Lin, Qifeng Shan, Jaehee Cho, E. Fred Schubert, Hyunwook Shim, Min-Ho Kim, and Cheolsoo Sone "Asymmetry of carrier transport leading to efficiency droop in GaInN based light-emitting diodes" *Applied Physics Letters* **99**, 251115 (December 2011)
301. Qifeng Shan, David S. Meyaard, Qi Dai, Jaehee Cho, E. Fred Schubert, Joong Kon Son, and Cheolsoo Sone "Transport-mechanism analysis of the reverse leakage current in GaInN light-emitting diodes" *Applied Physics Letters* **99**, 253506 (December 2011)

2012

302. Di Zhu, Martin F. Schubert, Jaehee Cho, E. Fred Schubert, Mary H. Crawford, Daniel D. Koleske, Hyunwook Shim, and Cheolsoo Sone "Genetic algorithm for innovative device designs in high-efficiency III–V nitride light-emitting diodes" *Applied Physics Express* **5**, 012102 (January 2012)
303. David S. Meyaard, Qifeng Shan, Jaehee Cho, E. Fred Schubert, Sang-Heon Han, Min-Ho Kim, Cheolsoo Sone, Seung Jae Oh, and Jong Kyu Kim "Temperature dependent efficiency droop in GaInN light-emitting diodes with different current densities" *Applied Physics Letters* **100**, 081106 (February 2012)
304. Jong-In Shim, Dong-Pyo Han, Hyunsung Kim, Dong-Soo Shin, Guan-Bo Lin, David S. Meyaard, Qifeng Shan, Jaehee Cho, E. Fred Schubert, Hyunwook Shim, and Cheolsoo Sone "Efficiency droop in AlGaInP and GaInN light-emitting diodes" *Applied Physics Letters* **100**, 111106 (March 2012)
305. (**Invited**) Jaehee Cho and E. Fred Schubert "Light Emitting Diodes" in the *Encyclopedia of Optical Engineering* edited by R. G. Driggers and C. Hoffman (Taylor & Francis, New York, 2012)
306. Ashok K. Sood, Roger E. Welser, Adam W. Sood and Yash R. Puri, David Poxson, Jaehee Cho and E. Fred Schubert, Nibir K. Dhar, Martin B. Soprano, Raymond S. Balcerak "Development of nanostructure-based antireflection coatings for EO/IR sensors" *SPIE Photonics West Conference Proceedings*, Volume **8257**, paper 53 (April 2012)
307. Guan-Bo Lin, David Meyaard, Jaehee Cho, E. Fred Schubert, Hyunwook Shim, and Cheolsoo Sone "Analytic model for the efficiency droop in semiconductors with asymmetric carrier-transport properties based on drift-induced reduction of injection efficiency" *Applied Physics Letters* **100**, 161106 (April 2012)
308. Adam W. Sood, David J. Poxson, Frank W. Mont, Sameer Chhajed, Jaehee Cho, E. Fred Schubert, Roger E. Welser, Nibir K. Dhar, and Ashok K. Sood "Experimental and theoretical study of the optical and electrical properties of nanostructured indium tin oxide fabricated by oblique-angle deposition" *Journal of Nanoscience and Nanotechnology* **12**, 3950 (July 2012)
309. Ming Ma, Ahmed N. Noemaun, Jaehee Cho, E. Fred Schubert, Gi Bum Kim, and Cheolsoo Sone "Emission pattern control and polarized light emission through patterned graded-refractive-index coatings on GaInN light-emitting diodes" *Optics Express* **20**, 16677 (July 2012)
310. Ming Ma, David S. Meyaard, Qifeng Shan, Jaehee Cho, E. Fred Schubert, Gi Bum Kim, Min-Ho Kim, and Cheolsoo Sone "Polarized light emission from GaInN light-emitting diodes embedded with subwavelength aluminum wire-grid polarizers" *Applied Physics Letters* **101**, 061103 (August 2012)

GF Exhibit 1022 - 172/175

311. Xing Yan, David J. Poxson, Jaehee Cho, Roger E. Welser, Ashok K. Sood, Jong Kyu Kim, and E. Fred Schubert "Enhanced omnidirectional photovoltaic performance of solar cells using multiple-discrete-layer tailored- and low-refractive index anti-reflection coatings" *Advanced Functional Materials* **2012**, 1 (September 2012)
312. Ming Ma, Jaehee Cho, E. Fred Schubert, Yongjo Park, Gi Bum Kim, and Cheolsoo Sone "Strong light-extraction enhancement in GaInN light-emitting diodes patterned with TiO_2 micro-pillars with tapered sidewalls" *Applied Physics Letters* **101**, 141105 (October 2012)

2013

313. Seung Jae Oh, Sameer Chhajed, David J. Poxson, Jaehee Cho, E. Fred Schubert, Sung Ju Tark, Donghwan Kim, and Jong Kyu Kim "Enhanced broadband and omni-directional performance of polycrystalline Si solar cells by using discrete multilayer antireflection coatings" *Optics Express* **21**, A157 (January 2013)
314. Jaehee Cho, E. Fred Schubert, and Jong Kyu Kim "Efficiency droop in light-emitting diodes: Challenges and countermeasures" *Laser and Photonics Reviews* 2012, **7**, 408 (January 2013)
315. David S. Meyaard, Guan-Bo Lin, Jaehee Cho, E. Fred Schubert, Hyunwook Shim, Sang-Heon Han, Min-Ho Kim, Cheolsoo Sone, and Young Sun Kim "Identifying the cause of the efficiency droop in GaInN light-emitting diodes by correlating the onset of high injection with the onset of the efficiency droop" *Applied Physics Letters* **102**, 251114 (June 2013)
316. Roger E. Welser, Adam W. Sood, Jaehee Cho, E. Fred Schubert, Jennifer L. Harvey, Nibir K. Dhar, Ashok K. Sood "Nanostructured Transparent Conductive Oxides for Photovoltaic Applications" *Materials Research Society Symposium Proceedings* **1493**, 23 (July 2013)
317. Seung Cheol Han, Jae-Kwan Kim, Jun Young Kim, Dong Min Lee, Jae-Sik Yoon, Jong-Kyu Kim, E. F. Schubert, and Ji-Myon Lee "Ohmic contacts to N-face p-type GaN using Ni/Au for the fabrication of polarization inverted light-emitting diodes" *Journal of Nanoscience and Nanotechnology* **13**, 5715 (August 2013)
318. Jun Hyuk Park, Dong Yeong Kim, Sunyong Hwang, David Meyaard, E. Fred Schubert, Yu Dae Han, Joo Won Choi, Jaehee Cho, Jong Kyu Kim "Enhanced overall efficiency of GaInN-based light-emitting diodes with reduced efficiency droop by Al-composition-graded AlGaN/GaN superlattice electron blocking layer" *Applied Physics Letters* **103**, 061104 (August 2013)
319. Seung Jae Oh, Gyeongmin Go, Jong-Lam Lee, E. Fred Schubert, Jaehee Cho, Jong Kyu Kim "Enhanced phosphor conversion efficiency of GaN-based white light-emitting diodes having dichroic-filtering contacts" *Journal of Materials Chemistry C*, **1**, 5733 (August 2013)
320. Guan-Bo Lin, Dong-Yeong Kim, Qifeng Shan, Jaehee Cho, E. Fred Schubert, Hyunwook Shim, Cheolsoo Sone, and Jong Kyu Kim "Effect of Quantum Barrier Thickness in the Multiple-Quantum-Well Active Region of GaInN / GaN Light-Emitting Diodes" *IEEE Photonics Journal* **5**, 1600207 (August 2013)
321. David S. Meyaard, Jaehee Cho, E. Fred Schubert, Sang-Heon Han, Min-Ho Kim, and Cheolsoo Sone "Analysis of the temperature dependence of the forward voltage characteristics of GaInN light-emitting diodes" *Applied Physics Letters* **103**, 121103 (September 2013)
322. David S. Meyaard, Guan-Bo Lin, Ming Ma, Jaehee Cho, E. Fred Schubert, Sang-Heon Han, Min-Ho Kim, HyunWook Shim, and Young Sun Kim "GaInN light-emitting diodes using separate epitaxial growth for the p-type region to attain polarization-inverted electron-blocking layer, reduced electron leakage, and improved hole injection" *Applied Physics Letters* **103**, 201112 (November 2013)
323. Ming Ma, Jaehee Cho, E. Fred Schubert, Gi Bum Kim, and Cheolsoo Sone "Optically functional surface structures for GaN-based light-emitting diodes" *Journal of Materials Chemistry C*, **1**, 8134 (November 2013)
324. Hee-Dong Kim, Ho-Myoung An, Kyoung Heon Kim, Su Jin Kim, Chi Sun Kim, Jaehee Cho, E. Fred Schubert, and Tae Geun Kim "A universal method of producing transparent electrodes using wide-bandgap materials" *Advanced Functional Materials* DOI: 10.1002/adfm.201301697 (November 2013)

2014

325. Hyunah Kwon, Juyoung Ham, Dong Yeong Kim, Seung Jae Oh, Subin Lee, Sang Ho Oh, E. Fred Schubert, Kyung-Geun Lim, Tae-Woo Lee, Sungjun Kim, Jong-Lam Lee, and Jong Kyu Kim "Organic Solar Cells: Three-dimensional nanostructured indium-tin-oxide electrodes for enhanced performance of bulk heterojunction organic solar cells" *Advanced Energy Materials* 1301566 (January 2014)
326. David S. Meyaard, Ming Ma, E. Fred Schubert, Chel-Jong Choi, Jaehee Cho, and Morgan Evans "Mesa-free III-V nitride light-emitting diodes with flat surface" *ECS Solid-State Letters* **3**, Q17 (February 2014)
327. Ming Ma, E. Fred Schubert, Jaehee Cho, Morgan Evans, Gi Bum Kim and Cheolsoo Sone "Fabrication of tapered graded-refractive-index micropillars using ion-implanted-photoresist as an etch mask" *Journal of Vacuum Science and Technology* A **32**, 021305-1 (March 2014)

GF Exhibit 1022 - 173/175

328. Seung Hee Lee, Ho Jin, Dong-Yeong Kim, Kyung Song, Sang Ho Oh, Sungjee Kim, E. Fred Schubert, and Jong Kyu Kim "Enhanced power conversion efficiency of quantum dot sensitized solar cells with near single-crystalline TiO_2 nano-helixes used as photoanodes" *Optics Express* **22**, A868 (April 2014)
329. Seung Hee Lee, Jeong Kwon, Dong Yeong Kim, Kyung Song, Sang Ho Oh, Jaehee Cho, E. Fred Schubert, Jong Hyeok Park, Jong Kyu Kim "Enhanced power conversion efficiency of dye-sensitized solar cells with multifunctional photoanodes based on a three-dimensional TiO_2 nanohelix array" *Solar Energy Materials & Solar Cells* **132**, 47 (August 2014)
330. Michael E Coltrin, Andrew M Armstrong, Igal Brener, Weng W Chow, Mary H Crawford, Arthur J Fischer, David F Kelley, Daniel D Koleske, Lincoln J Lauhon, James E Martin, May D Nyman, E Fred Schubert, Lauren E Shea-Rohwer, Ganapathi S Subramania, Jeffrey Y Tsao, George T Wang, Jonathan J Wierer, Jr, Jeremy B Wright "The Energy Frontier Research Center for Solid-State Lighting Science: Exploring New Materials Architectures and Light Emission Phenomena" *The Journal of Physical Chemistry C* **118**, 13330 (April 2014)
331. Keith Goossen, Daniel Wolfe, E. Fred Schubert, Dan Kilper, and Ursula Keller "Negawatts – Optics, Photonics and Energy Savings" *Optics and Photonics News*, November issue, page 34, (November 2014)
332. Guan-Bo Lin, Qifeng Shan, Yaqi Wang, Ting Li, and E. Fred Schubert " "U-turn" feature in the efficiency-versus-current curve of GaInN / GaN light-emitting diodes" *Applied Physics Letters* **105**, 221116 (December 2014)

2015

333. Jaehee Cho, David S. Meyaard, Ming Ma, and E. Fred Schubert "GaInN-based light emitting diodes embedded with wire grid polarizers" *Japanese Journal of Applied Physics* **54**, 02BB02 (January 2015)
334. Dong Yeong Kim, Guan-Bo Lin, Sunyong Hwang, Jun Hyuk Park, David Meyaard, E. Fred Schubert, Han-Youl Ryu, and Jong Kyu Kim "Polarization-engineered high-efficiency GaInN light-emitting diodes optimized by genetic algorithm" *IEEE Photonics Journal* **7**, 1300209 (February 2015)
335. D. Y. Kim, J. H. Park, J. W. Lee, S. Y. Hwang, S. J. Oh, J. S. Kim, C. Sone, E. F. Schubert, and J. K. Kim (2015) "Overcoming the fundamental limitation in light-extraction efficiency of Deep-UV LEDs by utilizing transverse-magnetic-dominant emission" *Light: Science & Applications* **4***, e263;* doi:10.1038/lsa.2015.36 (May 2015)
336. Jun Hyuk Park, Guan-Bo Lin, Dong Yeong Kim, Jong Won Lee, Jaehee Cho, Jungsub Kim, Jinsub Lee, Yong-Il Kim, Youngsoo Park, E. Fred Schubert, and Jong Kyu Kim "Distinct U-shape efficiency-versus-current curves in AlGaN-based deep-ultraviolet light-emitting diodes" *Optics Express* **23**, 15398 (June 2015)
337. Ashok K. Sood, Gopal Pethuraja, Roger E. Welser and Yash R. Puri, Nibir K. Dhar, Priyalal S. Wijewarnasuriya, Jay Lewis, Harry Efstathiadis, Pradeep Haldar, and E. Fred Schubert "Development of large area nanostructured antireflection coatings for EO/IR sensor applications" *International Journal of NanoScience and Nanotechnology*, Volume **6**, Number 2, pp. 57-70 (August 2015)
338. Ashok K. Sood, Roger E. Welser, Gopal G. Pethuraja, Adam W. Sood, Yash R. Puri, E. Fred Schubert, Pradeep Haldar, Nibir K. Dhar, Dennis L. Polla, and Priyalal Wijewarnasuriya "Nanostructured anti-reflection (AR) coatings for optoelectronic applications" published in: *Comprehensive Guide for Nanocoatings Technology*, Volume **4**, Editor: Mahmood Aliofkhazraei, ISBN-13 978-1-63482-648-8 (Nova Science Publishers Inc., Hauppauge, New York, USA, November 2015)
339. E. Fred Schubert, Jaehee Cho, and Jong Kyu Kim "Light Emitting Diodes" published in: *Kirk-Othmer Encyclopedia of Chemical Technology*; on-line access at < http://onlinelibrary.wiley.com/book/10.1002/0471238961 > ISBN: 9780471238966 DOI: 10.1002/0471238961 (John Wiley and Sons and Wiley Inter-Science, New York NY, December 2015)
340. Guan-Bo Lin and E. Fred Schubert "Efficiency re-climbing in high-current droop regime for gallium-nitride-based light-emitting diodes" *International Journal of High-Speed Electronics and Systems*, *World Scientific Publishing Company* **24**, 1520008 (December 2015)
341. E. F. Schubert "Physical Foundations of Solid-State Devices" (author), eBook, 275 pages, 2015 Edition, ISBN-13: 978-0-9863826-2-8 (Google Books, Mountain View CA, 2015)

2016

342. E. Fred Schubert, Jaehee Cho, and Jong Kyu Kim "Light Emitting Diodes" published in: *Reference Module in Materials Science and Materials Engineering*, Section on Light Emitting Diodes, Materials Science and Materials Engineering, Edited by Saleem Hashmi (Elsevier Publishing Company, Amsterdam, 2016) < https://www.sciencedirect.com/science > (January 2016)
343. Kyurin Kim, Jun Hyuk Park, Hyunsoo Kim, Jong Kyu Kim, E. Fred Schubert, and Jaehee Cho "Energy bandgap variation in oblique angle-deposited indium tin oxide" *Applied Physics Letters* **108**, 041910 (January 2016)

GF Exhibit 1022 - 174/175

344. Jun Hyuk Park, Jong Won Lee, Dong Yeong Kim, Jaehee Cho, E. Fred Schubert, Jungsub Kim, Jinsub Lee, Yong-Il Kim, Youngsoo Park, and Jong Kyu Kim "Variation of the external quantum efficiency with temperature and current density in red, blue, and deep ultraviolet light-emitting diodes" *Journal of Applied Physics* **119**, 023101 (January 2016)
345. JongWon Lee, Dong Yeong Kim, Jun Hyuk Park, E. Fred Schubert, Jungsub Kim, Jinsub Lee, Yong-Il Kim, Youngsoo Park, and Jong Kyu Kim "An elegant route to overcome fundamentally-limited light extraction in AlGaN deep-ultraviolet light-emitting diodes: Preferential outcoupling of strong in-plane emission" *Scientific Reports* **6**, 22537 (March 2016)

2017

346. Jaehee Cho, Jun Hyuk Park, Jong Kyu Kim, and E. Fred Schubert "White light-emitting diodes: History, progress, and future" *Laser and Photonics Review*, 1600147 (2017) / DOI 10.1002/lpor.201600147 (March 2017)
347. Jun Hyuk Park, Jaehee Cho, E. Fred Schubert, and Jong Kyu Kim "The effect of imbalanced carrier transport on the efficiency droop in GaInN-based blue and green light-emitting diodes" *Energies* **10**, 1277 (2017) DOI: 10.3390/en10091277 (August 2017)

2018

348. E. Fred Schubert "Light Emitting Diodes, 3rd Edition" Book, 672 pages, with hundreds of colored figures ISBN: 978-0-9 863826-6-6 (Google Books, Mountain View CA, 2018)
349. JH Park, DY Kim, EF Schubert, J Cho, JK Kim "Fundamental Limitations of Wide-Bandgap Semiconductors for Light-Emitting Diodes" *ACS Energy Letters* **3**, 655-662 (2018)

2020

350. Bhishma Pandit, E. Fred Schubert and Jaehee Cho "Dual-functional ultraviolet photodetector with graphene electrodes on AlGaN/GaN heterostructure" *Nature Research – Scientific Reports* **10**, 22059 (2020)

2022

351. E. F. Schubert "Physical Foundations of Solid-State Devices" (author), eBook, 318 pages, 2022 Edition, ISBN-13: 978-0-9863826-2-8 (Google Books, Mountain View CA, 2022)

2024

352. Yung Ryel Ryu, Sung Ki Hong, E Fred Schubert, Dong-Min Jeon, Dong-Soo Shin, Jong-In Shim, Sang-Mook Kim, Jong Hyeob Baek "A next-generation light-emitting device: ZOGAN LED with a heterogeneous p-layer composed of oxide and nitride semiconductors" *AIP Advances* (AIP Publishing), Volume **14**, Issue 4 (2024)

GF Exhibit 1022 - 175/175