US008310990B2

(12) **United States Patent**
Pan

(10) **Patent No.: US 8,310,990 B2**
(45) **Date of Patent: *Nov. 13, 2012**

(54) **SYSTEM, METHOD, AND DEVICE FOR ROUTING CALLS USING A DISTRIBUTED MOBILE ARCHITECTURE**

(75) Inventor: **Shaowei Pan**, Kildeer, IL (US)

(73) Assignee: **Lemko Corporation**, Itasca, IL (US)

(*) Notice: Subject to any disclaimer, the term of this patent is extended or adjusted under 35 U.S.C. 154(b) by 0 days.

This patent is subject to a terminal disclaimer.

(21) Appl. No.: **12/942,642**

(22) Filed: **Nov. 9, 2010**

(65) **Prior Publication Data**

US 2011/0060853 A1 Mar. 10, 2011

Related U.S. Application Data

(63) Continuation of application No. 12/172,639, filed on Jul. 14, 2008, now Pat. No. 7,855,988.

(51) **Int. Cl.**
H04W 4/00 (2009.01)

(52) **U.S. Cl.** **370/328**; 370/352; 370/400

(58) **Field of Classification Search** ..... None
See application file for complete search history.

(56) **References Cited**

U.S. PATENT DOCUMENTS

4,284,848	A	8/1981	Frost
5,590,175	A	12/1996	Gallant et al.
5,623,495	A	4/1997	Eng et al.
5,734,979	A	3/1998	Lu et al.
5,933,784	A	8/1999	Gallagher et al.
5,991,639	A	11/1999	Rautiola et al.
6,122,499	A	9/2000	Magnusson
6,131,038	A	10/2000	Sekine
6,141,564	A	10/2000	Bruner et al.
6,160,804	A	12/2000	Ahmed et al.
6,411,825	B1	6/2002	Csapo et al.
6,418,308	B1	7/2002	Heinonen et al.
6,421,325	B1	7/2002	Kikinis
6,515,985	B2	2/2003	Shmulevich et al.
6,539,237	B1	3/2003	Sayers et al.
6,542,497	B1	4/2003	Curry et al.

(Continued)

FOREIGN PATENT DOCUMENTS

EP 0365885 5/1990

(Continued)

OTHER PUBLICATIONS

Non-Final Office Action for U.S. Appl. No. 12/172,639, mailed May 21, 2010, 6 pages.

(Continued)

Primary Examiner — Bob Phunkulh
(74) *Attorney, Agent, or Firm* — Toler Law Group, PC

(57) **ABSTRACT**

Methods and devices for routing communications between distributed mobile architecture (DMA) servers using DMA gateways are disclosed. Communications information is received at a first DMA gateway of a DMA gateway communications network. The communications information is associated with a communications network that is accessible by a second DMA gateway of the DMA gateway communications network. The communications information is stored at a memory of the first DMA gateway. The first DMA gateway receives a communication that is associated with a destination device indicated by the communications information to be served by the second DMA gateway. The communication is routed from the first DMA gateway to the destination device by relaying the communication from the first DMA gateway to the second DMA gateway via the DMA gateway communications network.

25 Claims, 15 Drawing Sheets

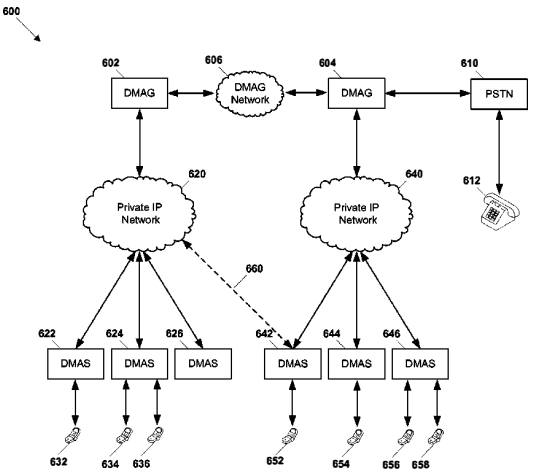

U.S. PATENT DOCUMENTS

6,584,098 B1 6/2003 Dutnall
6,611,533 B1 8/2003 Liao et al.
6,614,784 B1 9/2003 Glitho et al.
6,647,426 B2 11/2003 Mohammed
6,678,155 B1 1/2004 Bresniker
6,694,134 B1 2/2004 Lu et al.
6,697,355 B1 2/2004 Lim
6,704,409 B1 3/2004 Dilip et al.
6,731,932 B1 5/2004 Rune et al.
6,735,184 B1 * 5/2004 Davidson et al. 370/316
6,751,207 B1 6/2004 Lee et al.
6,760,325 B1 7/2004 Hameleers et al.
6,763,226 B1 7/2004 McZeal, Jr.
6,763,233 B2 7/2004 Bharatia
6,791,988 B1 9/2004 Hameleers
6,795,444 B1 9/2004 Vo et al.
6,807,431 B2 10/2004 Sayers et al.
6,807,432 B2 10/2004 Hwang
6,816,706 B1 11/2004 Hohnstein et al.
6,819,652 B1 11/2004 Aravamudhan et al.
6,831,903 B2 12/2004 Kang
6,839,356 B2 1/2005 Barany et al.
6,859,652 B2 2/2005 Karabinis et al.
6,871,072 B1 3/2005 Meche
6,879,582 B1 4/2005 Dhara et al.
6,879,677 B2 4/2005 Trandal et al.
6,917,813 B2 7/2005 Elizondo
6,937,708 B2 8/2005 Hirose
6,958,983 B2 10/2005 Musikka et al.
6,985,454 B1 * 1/2006 Wiedeman et al. 370/316
7,003,286 B2 2/2006 Brown et al.
7,050,414 B2 5/2006 Lin
7,054,307 B2 5/2006 Papadimitriou et al.
7,054,322 B2 5/2006 D'Annunzio et al.
7,120,435 B2 10/2006 Usher et al.
7,120,436 B2 10/2006 Kim
7,133,670 B1 11/2006 Moll et al.
7,136,651 B2 11/2006 Kalavade
7,158,621 B2 1/2007 Bayne
7,171,216 B1 1/2007 Choksi
7,299,039 B2 11/2007 Lee et al.
7,313,399 B2 12/2007 Rhee et al.
7,324,478 B2 1/2008 Park et al.
7,328,268 B1 2/2008 Foltak et al.
7,346,334 B2 3/2008 Gaeta et al.
7,349,412 B1 3/2008 Jones et al.
7,359,700 B2 4/2008 Swensen et al.
7,385,947 B2 6/2008 Wu et al.
7,406,069 B2 7/2008 Yashar et al.
7,424,313 B2 9/2008 Ham et al.
7,486,967 B2 2/2009 Pan et al.
7,536,170 B2 5/2009 Goldman et al.
7,548,763 B2 6/2009 Pan
7,552,670 B2 6/2009 Goldman et al.
7,653,414 B2 1/2010 Pan
7,738,488 B2 6/2010 Marsico et al.
7,760,695 B2 7/2010 Gopalakrishnan et al.
7,787,879 B1 8/2010 Philips et al.
7,840,230 B2 11/2010 Pan
7,855,988 B2 12/2010 Pan
7,856,233 B2 12/2010 Pan
7,979,066 B2 7/2011 Pan
8,036,158 B2 10/2011 Pan et al.
8,046,420 B2 10/2011 Pan
8,089,920 B2 1/2012 Pan
8,107,409 B2 1/2012 Pan
2001/0046859 A1 11/2001 Kil
2001/0055298 A1 12/2001 Baker et al.
2002/0009060 A1 1/2002 Gross
2002/0015392 A1 2/2002 Musikka et al.
2002/0016180 A1 2/2002 Derosier et al.
2010/0048208 A9 2/2002 GUNARATNAM, ET AL.
2002/0045444 A1 4/2002 Usher et al.
2002/0051518 A1 5/2002 Bondy et al.
2002/0058502 A1 5/2002 Stanforth
2002/0061746 A1 5/2002 Jo et al.
2002/0160772 A1 10/2002 Gailey et al.
2002/0169887 A1 11/2002 MeLampy et al.
2003/0048766 A1 3/2003 D'Annunzio et al.
2003/0088698 A1 5/2003 Singh et al.
2003/0092441 A1 5/2003 Taha et al.
2003/0096628 A1 5/2003 Bar-On et al.
2003/0100302 A1 5/2003 Armbruster et al.
2003/0153343 A1 8/2003 Crockett et al.
2004/0014466 A1 1/2004 Jesse et al.
2004/0018829 A1 1/2004 Raman et al.
2004/0019539 A1 1/2004 Raman et al.
2004/0156495 A1 8/2004 Chava et al.
2004/0203621 A1 10/2004 Brown et al.
2004/0203677 A1 10/2004 Brown et al.
2004/0204097 A1 10/2004 Scheinert et al.
2004/0253984 A1 12/2004 Csapo et al.
2004/0259556 A1 12/2004 Czys
2005/0064922 A1 3/2005 Owens et al.
2005/0070278 A1 3/2005 Jiang
2005/0075106 A1 4/2005 Jiang
2005/0091392 A1 4/2005 Gesswein et al.
2005/0250491 A1 11/2005 Roy
2006/0046714 A1 3/2006 Kalavade
2006/0046760 A1 3/2006 Bertino et al.
2006/0052113 A1 3/2006 Ophir et al.
2006/0063544 A1 3/2006 Zhao et al.
2006/0098661 A1 5/2006 Pan
2006/0114934 A1 6/2006 Shin et al.
2006/0141984 A1 6/2006 Taglienti et al.
2006/0142011 A1 6/2006 Kallio
2006/0148465 A1 7/2006 Perdomo et al.
2006/0159039 A1 7/2006 Jung et al.
2006/0203746 A1 9/2006 Maggenti et al.
2006/0217121 A1 9/2006 Soliman et al.
2006/0221912 A1 10/2006 Olivier et al.
2006/0234747 A1 * 10/2006 Pan 455/519
2006/0234774 A1 * 10/2006 Pan et al. 455/560
2006/0258358 A1 11/2006 Kallio
2007/0008968 A1 1/2007 Baker et al.
2007/0010245 A1 1/2007 Levitan
2007/0021118 A1 1/2007 Ophir
2007/0060124 A1 3/2007 Kalavade
2007/0076697 A1 4/2007 Huotari et al.
2007/0087738 A1 4/2007 Melkesetian
2007/0147598 A1 6/2007 Somes et al.
2007/0213075 A1 9/2007 Jiang
2007/0230352 A1 10/2007 Kokku et al.
2007/0243891 A1 10/2007 Civanlar et al.
2007/0271606 A1 11/2007 Amann et al.
2007/0287452 A1 12/2007 Pan
2007/0291910 A1 12/2007 Bucchieri et al.
2008/0101314 A1 5/2008 Bachmutsky
2008/0101410 A1 5/2008 Barkley et al.
2008/0146158 A1 6/2008 Pan
2008/0168523 A1 7/2008 Ansari et al.
2009/0003269 A1 * 1/2009 Kumazawa et al. 370/328
2009/0022155 A1 1/2009 Rosenberg et al.
2009/0067441 A1 3/2009 Ansari et al.
2009/0186626 A1 7/2009 Raghothaman
2009/0215449 A1 8/2009 Avner
2009/0227230 A1 9/2009 Camilleri et al.
2009/0325584 A1 12/2009 Pan
2009/0327819 A1 12/2009 Pan
2010/0048197 A1 2/2010 Jiang
2010/0057485 A1 3/2010 Luft
2010/0080214 A1 4/2010 Li et al.
2010/0094878 A1 4/2010 Soroca et al.
2010/0217837 A1 8/2010 Ansari et al.
2011/0059740 A1 3/2011 Pan
2011/0223921 A1 9/2011 Pan
2012/0002607 A1 1/2012 Pan

FOREIGN PATENT DOCUMENTS

WO 2007102003 A1 9/2007

OTHER PUBLICATIONS

Notice of Allowance and Fee(s) Due for U.S. Appl. No. 12/172,639, mailed Sep. 17, 2010, 4 pages.

The International Search Report and the Written Opinion from the International Searching Authority (ISA/KR) for International Application No. PCT/US2009/045973, mailed Jan. 18, 2010, 14 pages.

Hoffpauir et al., United States Statutory Invention Registration No. H1,918; Entitled "Integrated Authentication Center and Method for Authentication in a Wireless Telecommunications Network"; Filed Feb. 19, 1998; Published Nov. 7, 2000; 19 Pages.
Pan, U.S. Appl. No. 13/309,003; "Providing Communications Using A Distributed Mobile Architecture"; Filed Dec. 20, 2011.
B.G. Evans and K. Baughan; "Visions of 4G"; Electronics & Communication Engineering Journal; Dec. 2000; pp. 293-303.
Shirshanka Das, Alok Nandan & Giovanni Pau (University of CA, Los Angeles, CA, U); "Spawn: A Swarming Protocol for Vehicular Ad-Hoc Wireless Networks"; VANET'04, Oct. 1, 2004, Philadelphia, PA, USA; ACM 1-58113-922-5/04/0010; 2 pgs.
Yu-Chee Tseng, Chia-Ching Shen (National Chiao Tung University) & Wen-Tsuen Chen (National Tsing Hua University); "Integrating Mobile IP with Ad Hoc Networks"; IEEE Computer Society; 0018-9162/03; 2003 IEEE; May 2003; pp. 48-55.
Halim Yanikomeroglu, David D. Falconer & Van M. Sreng; "Coverage Enhancement Through Two-Hop Peer-to-Peer Relaying in Cellular Radio Networks"; Broadband Communications and Wireless Systems (BCWS) Centre Department of Systems & Computer Engineering, Carleton University, Ottawa, Canada; WWRF Meeting #7, Eindhoven, the Netherlands, Dec. 3-4, 2002, WG4: Spectrum, New Air Interfaces and Ad-Hoc Networking Multi-Hop Wireless Systems; 10 pages.
Bur Goode; "Voice Over Internet Protocol (VolP)"; 0018-9219/02 2002 IEEE; Proceedings of the IEEE; vol. 90, No. 9, Sep. 2002; pp. 1495-1517.
Kyung-Hyu Lee, Kyu-Ok Lee & Kwon-Chul Park (Network Research Laboratory Etri Korea) Jong-Ok Lee and YoonHak Bang (Network Planning Team KT Korea); "Architecture to be Deployed on Strategies of Next-Generation Networks"; 0/7803-7802-Apr. 3, 2003 IEEE; pp. 819-822.
Wolfgang Kellerer, Christian Bettstetter, Christian Schwingenschlogl & Peter Sties (Technische Universitat Munchen) Karl-Ernst Steinberg (BMW) & Hans-Jörg Vögel (the Fantastic Corp); "(Auto) Mobile Communication in a Heterogeneous and Converged World"; IEEE Personal Communications; Dec. 2001; 1070-9916/01; 2001 IEEE pp. 41-47.
Nilanjan Banerjee & Sajal K. Das (University of Texas, Arlington) & Arup Acharya (IBM T.J. Watson Research Center)' "Peer-to-peer SIP-based Services over Wireless Ad Hoc Networks"; BROADWIM: Broadband Wireless Multimedia Workshop; Oct. 29, 2004—broadnets.org; *This work was supported by NSF under the ORBIT testbed project, grant # NSF NRT Project #ANI-0335244 and by NSF ITR grant IIS-0326505; 8 pages.
Hung-Yu Wei (Columbia University) & Richard D. Gitlin (NEC Laboratories America); "Two-Hop-Relay Architecture for Next-Generation WWAN/WLAN Integration"; 4G Mobile Communications: Toward Open Wireless Architecture; 1536-1284/04 2004 IEEE; IEEE Wireless Communications; Apr. 2004; pp. 2-9.
Wolfgang Kellerer (LKN, Munich University of Technology), Hans-Jorg Vogel (the Fantastic Corp.) & Karl-Ernst Steinberg (BMW); "A Communication Gateway for Infrastructure Independent Wireless Access"; IEEE Communications Magazine; Mar. 2002; vol. 9; No. 3; 6 pages.
Willie W. Lu & Jenny Hu (U.S. Center for Wireless Communications, Stanford University, CA); "Open Wireless Architecture—The Core to 4G Mobile Communications"; China Communications; Apr. 2006; pp. 32-39.
Ralf Pabst, Bernard H. Walke & Daniel C. Schultz (Rwth Aachen University) Patrick Herhold & Gerhard P. Fettweis (Technical University of Dresden) Halim Yanikomeroglu & David D. Falconer (Carleton University) Sayandev Mukherjee & Harish Viswanathan (Lucent Technologies) Matthias Lott & Wolfgang Zirwas (Siemens ICM) Mischa Dohler & Hamid Aghvami (Kings College); "Relay-Based Deployment Concepts for Wireless and Mobile Broadband Radio"; 0163-6804/04; 2004 IEEE; IEEE Communications Magazine; Sep. 2004; pp. 80-89.
Simone Frattasi, Hanane Fathi, Frank H.P. Fitzek & Ramjee Prasad (Aalborg University) Marcos D. Katz (Samsung Electronics); "Defining 4G Technology from the User's Perspective"; IEEE Network; Jan./Feb. 2006; 0890-8044/06; 2006 IEEE; pp. 35-41.
Ian F. Akyildiz (Broadband and Wireless Networking BWN Lab, Georgia Institute of Technology) Xudong Wang & Weilin Wang (Kiyon, Inc. La Jolla, CA); "Wireless Mesh Networks: A Survey"; Computer Networks 47; Jan. 1, 2005; pp. 445-487; 1389-1286 2004 Elsevier B.V.
Brian Woerner (Virginia Tech, Blacksburg, VA) & Mostofa Howlader (University of Tennessee, Knoxville, TN); "Research Directions for Fourth Generation Wireless"; Proceedings of the 10th IEEE International Workshops on Enabling Technologies: Infrastructure for Collaborative Enterprises (WETICE 2001); Jun. 20-22, 2001; Cambridge, MA, USA; IEEE Computer Society 2001; ISBN 0/7695-1269-0; 2 pages.
"Framework and Overall Objectives of the Future Development of IMT-2000 and Systems Beyond IMT-2000"; International Telecommunication Union; ITU-R Radiocommunication Sector of ITU; Recommendation ITU-R M.1645 (Jun. 2003); M Series; Mobile, Radiodetermination, Amateur and Related Satellite Services; 26 pages.

* cited by examiner

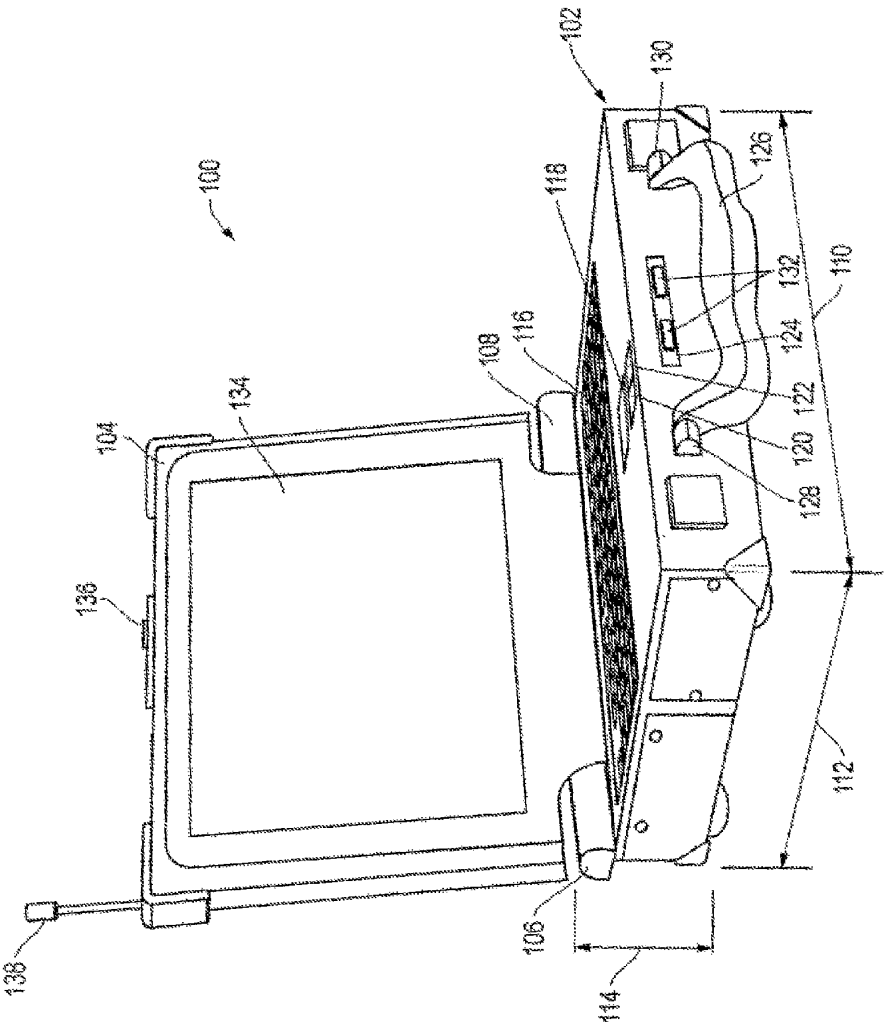
100
102
104
106
108
110
112
114
116
118
120
122
124
126
128
130
132
134
136
138

FIG. 1

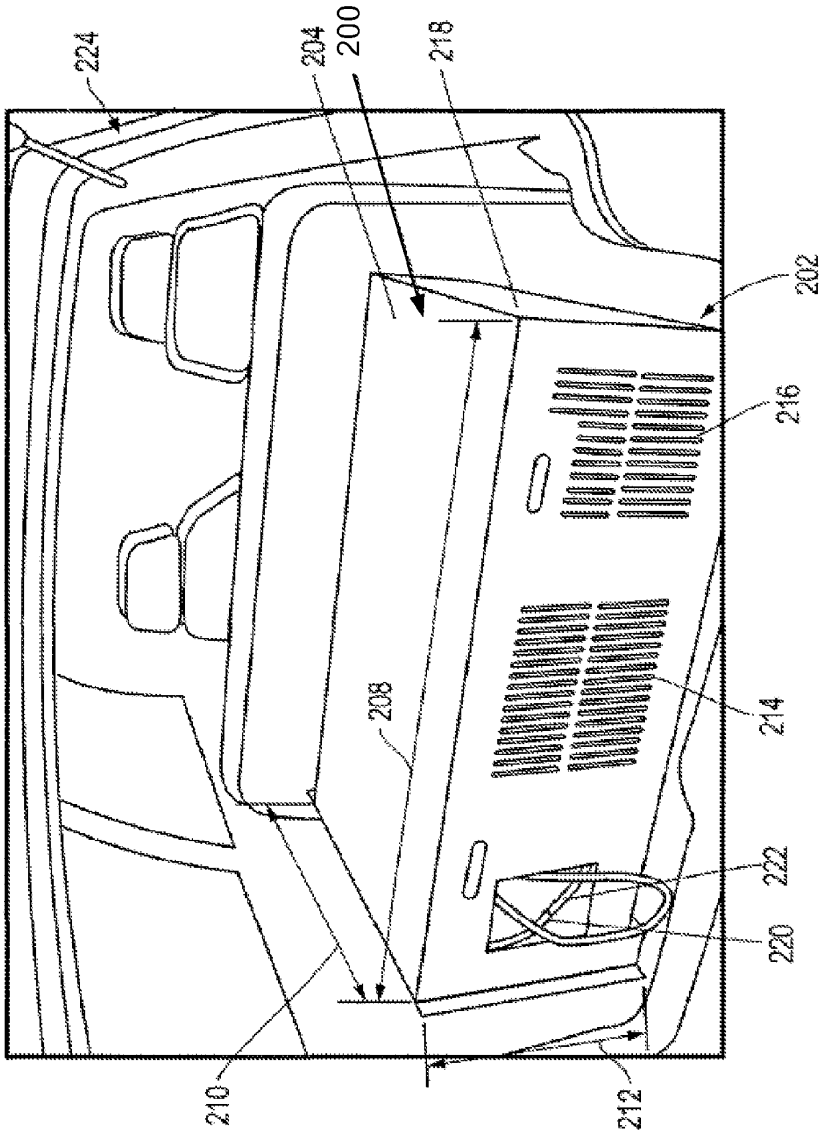

FIG. 2

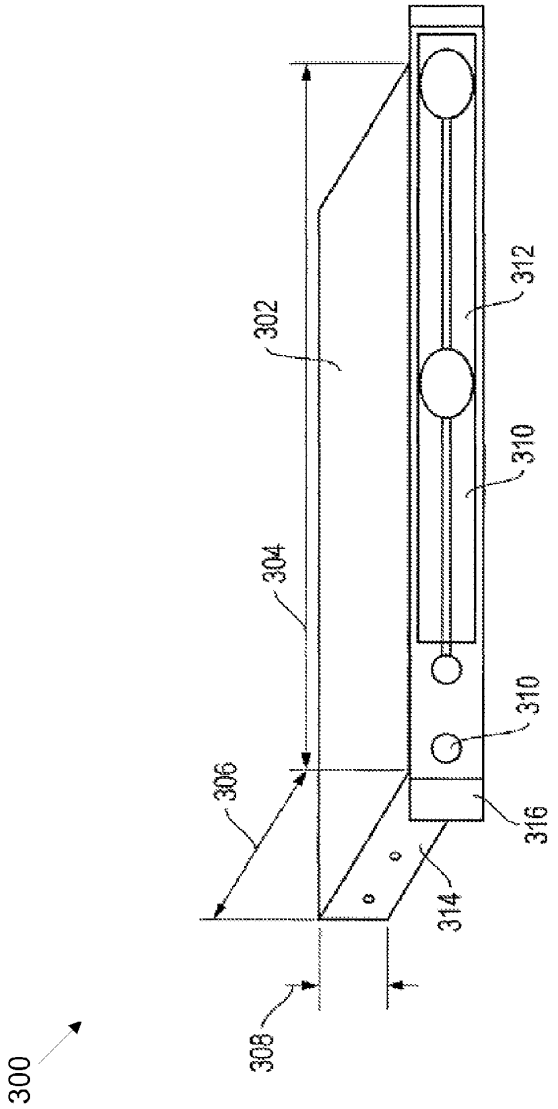

FIG. 3

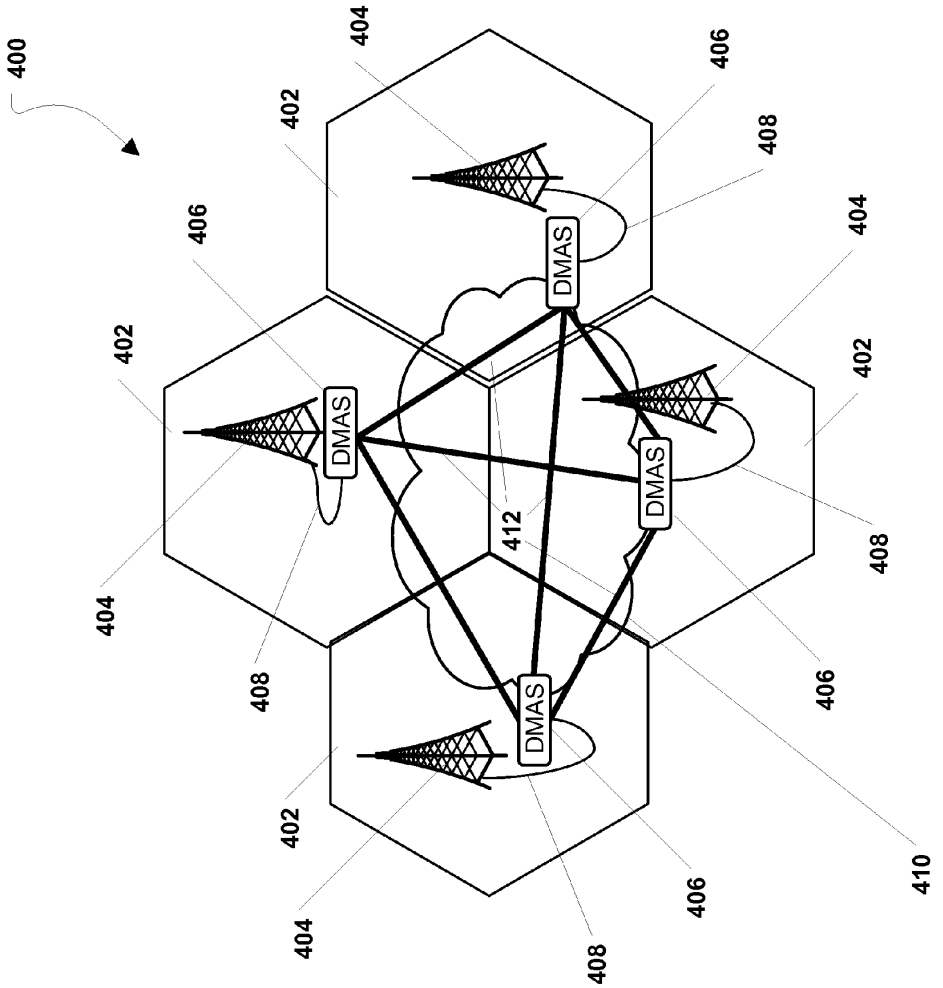

FIG. 4

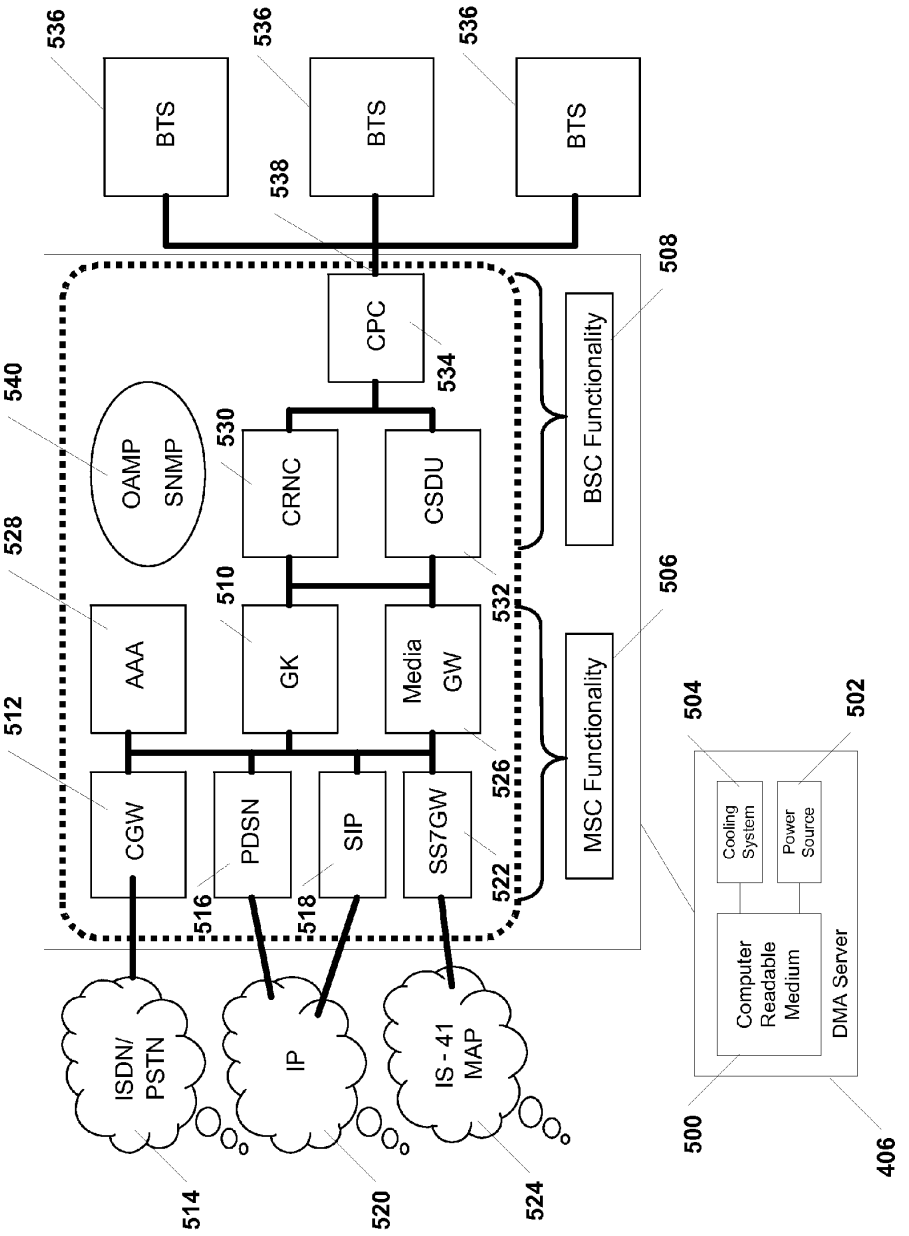
536
BTS
536
BTS
536
BTS
538
CPC
534
508
BSC Functionality
540
OAMP
SNMP
530
CRNC
CSDU
528
AAA
510
GK
Media
GW
532
506
MSC Functionality
512
CGW
PDSN
SIP
SS7GW
516
518
522
526
ISDN/
PSTN
IP
IS - 41
MAP
514
520
524
504
Cooling
System
Power
Source
502
Computer
Readable
Medium
DMA Server
500
406

FIG. 5

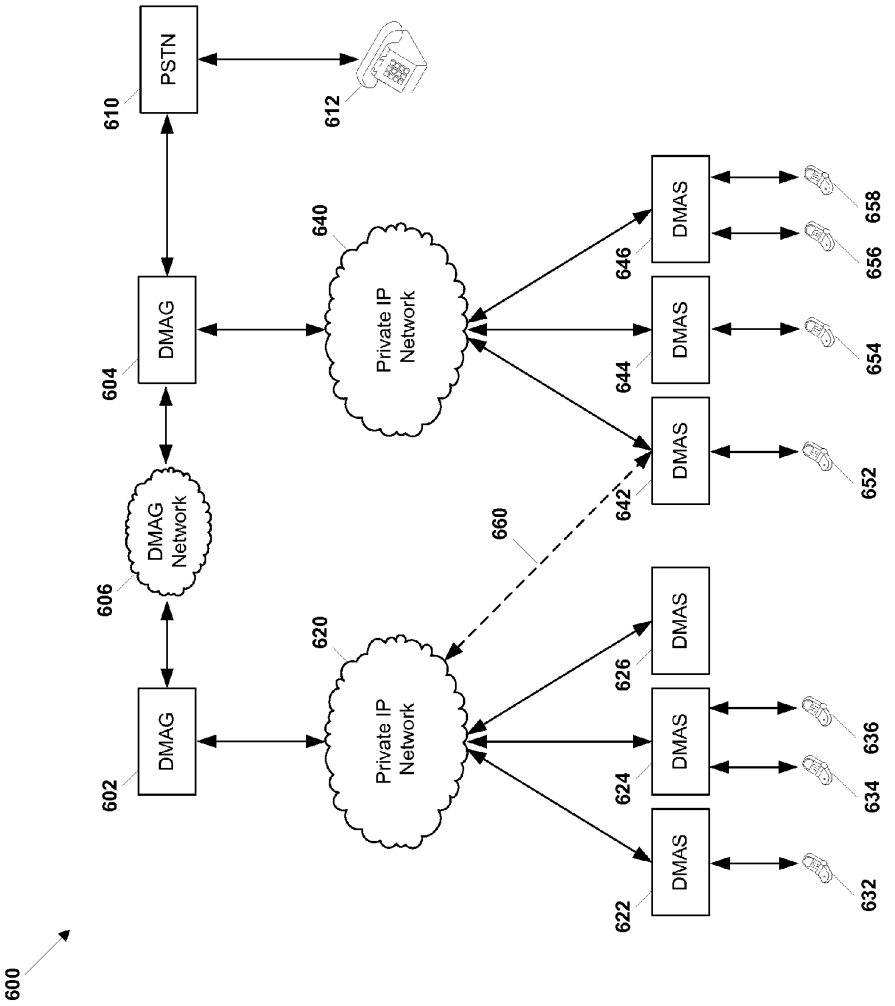
600
602
DMAG
606
DMAG Network
604
DMAG
610
PSTN
612
620
Private IP Network
640
Private IP Network
660
622
DMAS
624
DMAS
626
DMAS
632
634
636
642
DMAS
644
DMAS
646
DMAS
652
654
656
658

FIG. 6

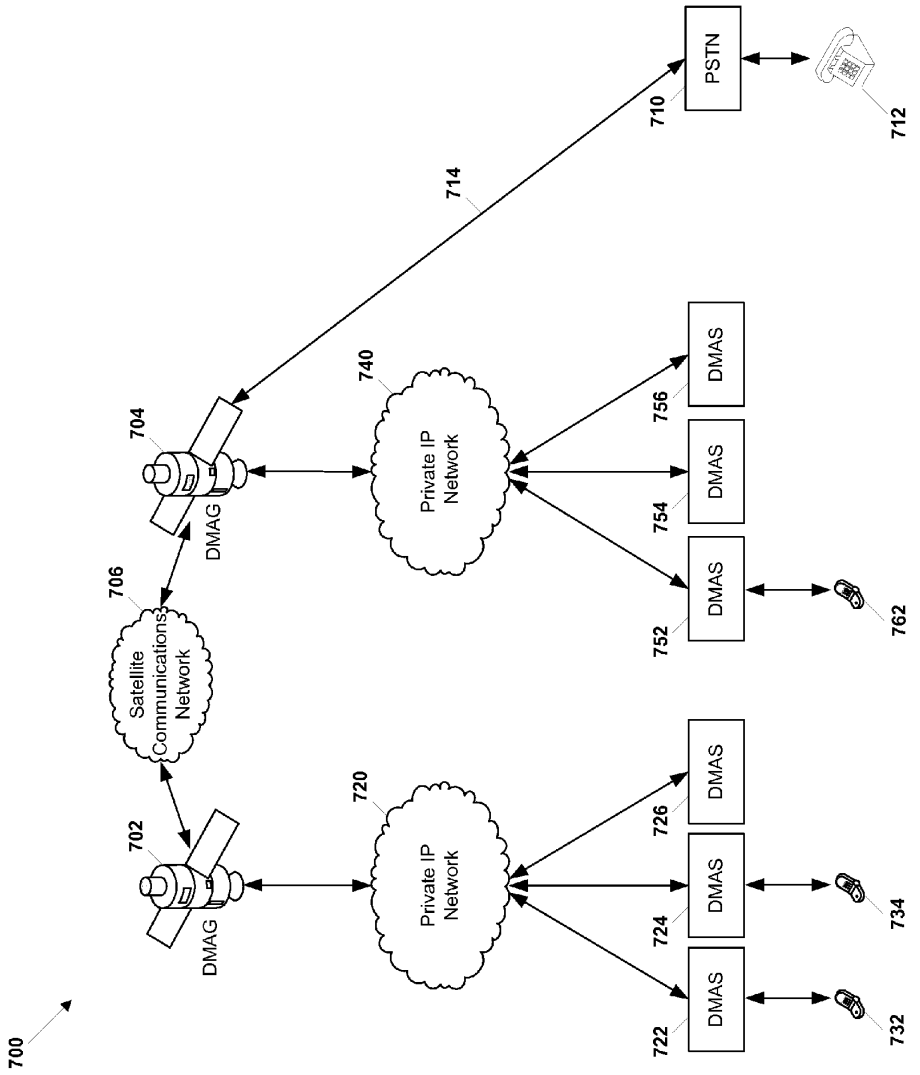
700
702
DMAG
704
DMAG
706
Satellite Communications Network
714
710
PSTN
712
720
Private IP Network
740
Private IP Network
722
DMAS
724
DMAS
726
DMAS
732
734
752
DMAS
754
DMAS
756
DMAS
762

FIG. 7

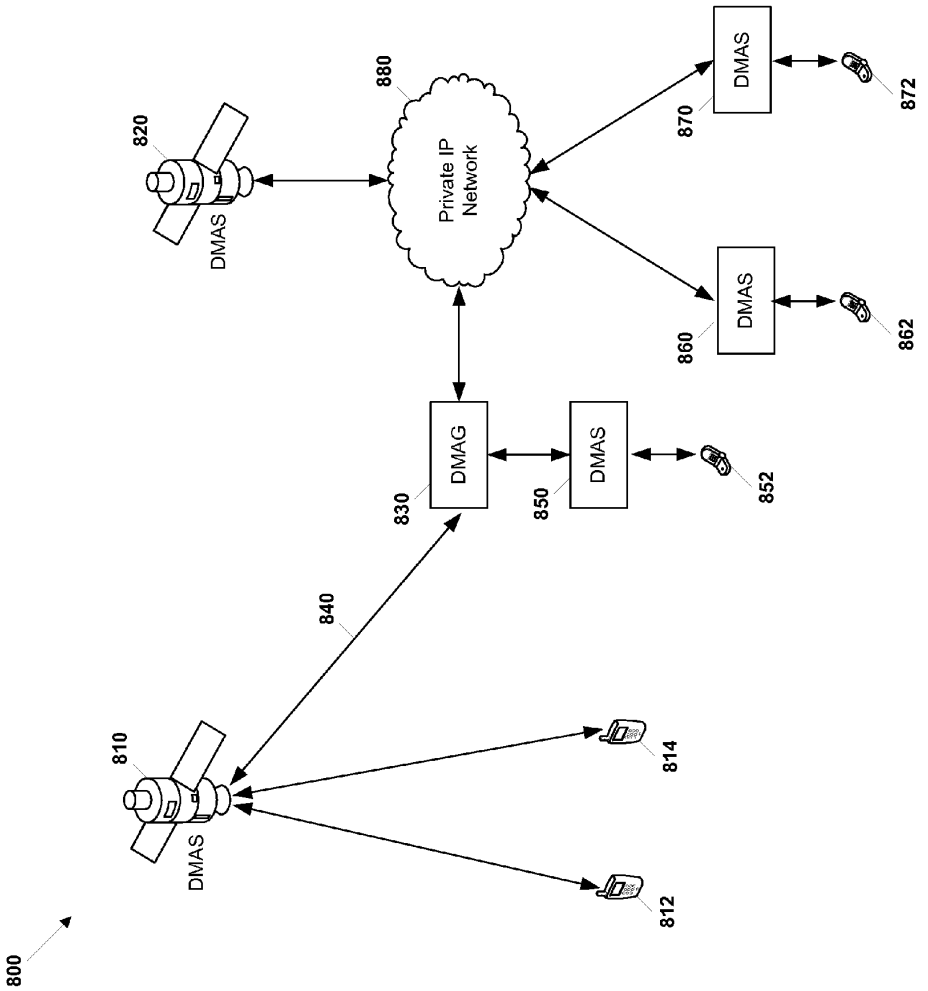
800
810
DMAS
812
814
840
820
DMAS
830
DMAG
850
DMAS
852
880
Private IP Network
860
DMAS
862
870
DMAS
872

FIG. 8

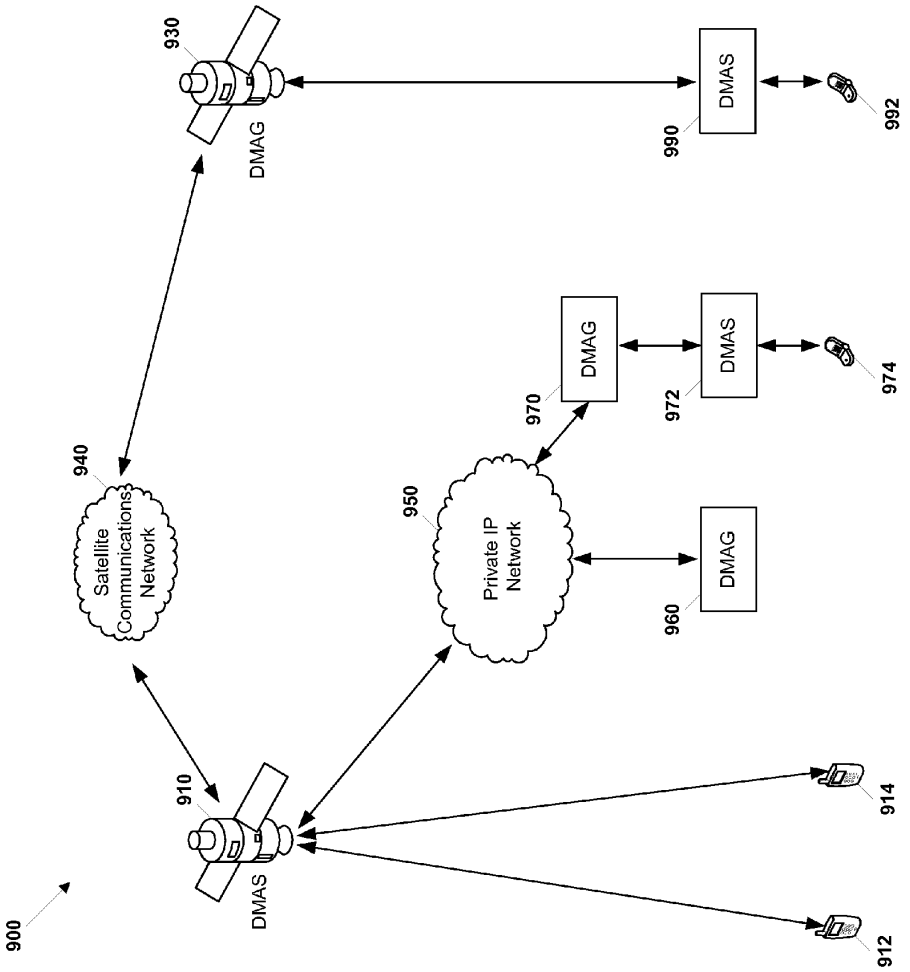
900
910
DMAS
912
914
940
Satellite Communications Network
930
DMAG
950
Private IP Network
960
DMAG
970
DMAG
972
DMAS
974
990
DMAS
992

FIG. 9

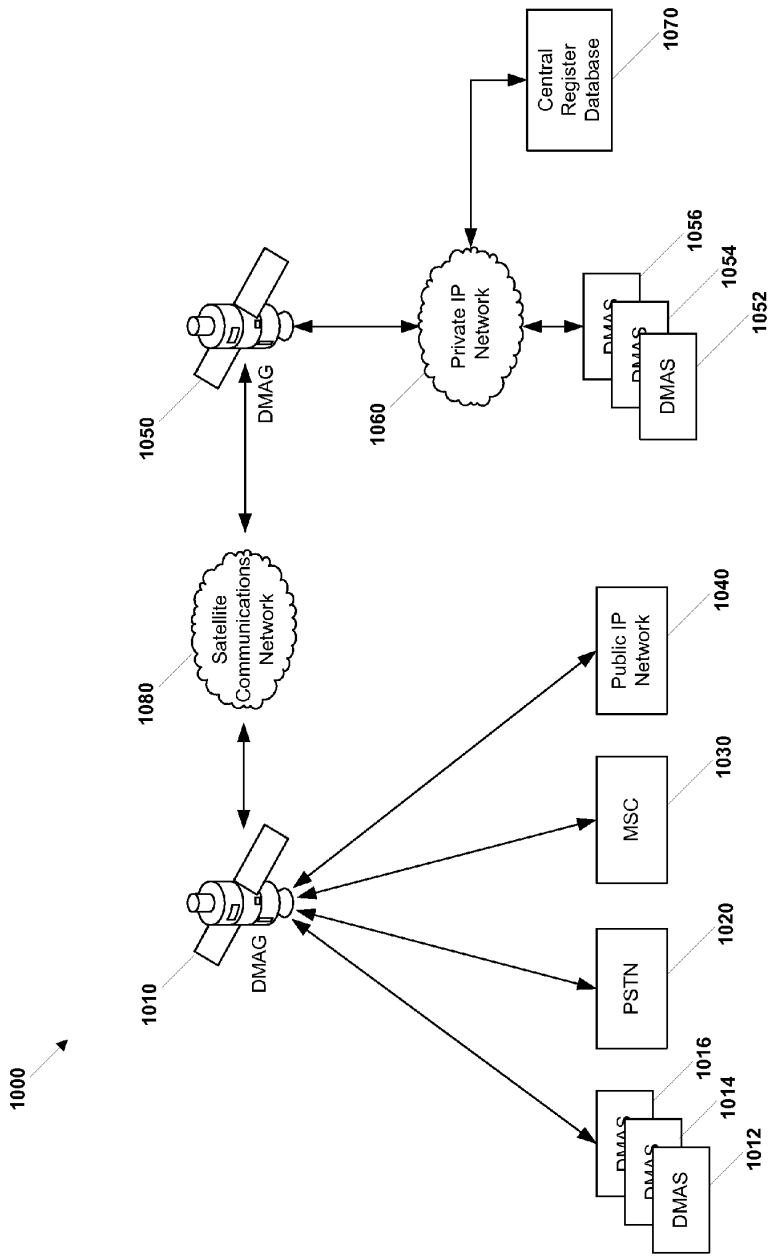
1000
1010
DMAG
1080
Satellite Communications Network
1050
DMAG
1060
Private IP Network
Central Register Database
1070
DMAS
1012
DMAS
1014
DMAS
1016
PSTN
1020
MSC
1030
Public IP Network
1040
DMAS
1052
DMAS
1054
DMAS
1056

FIG. 10

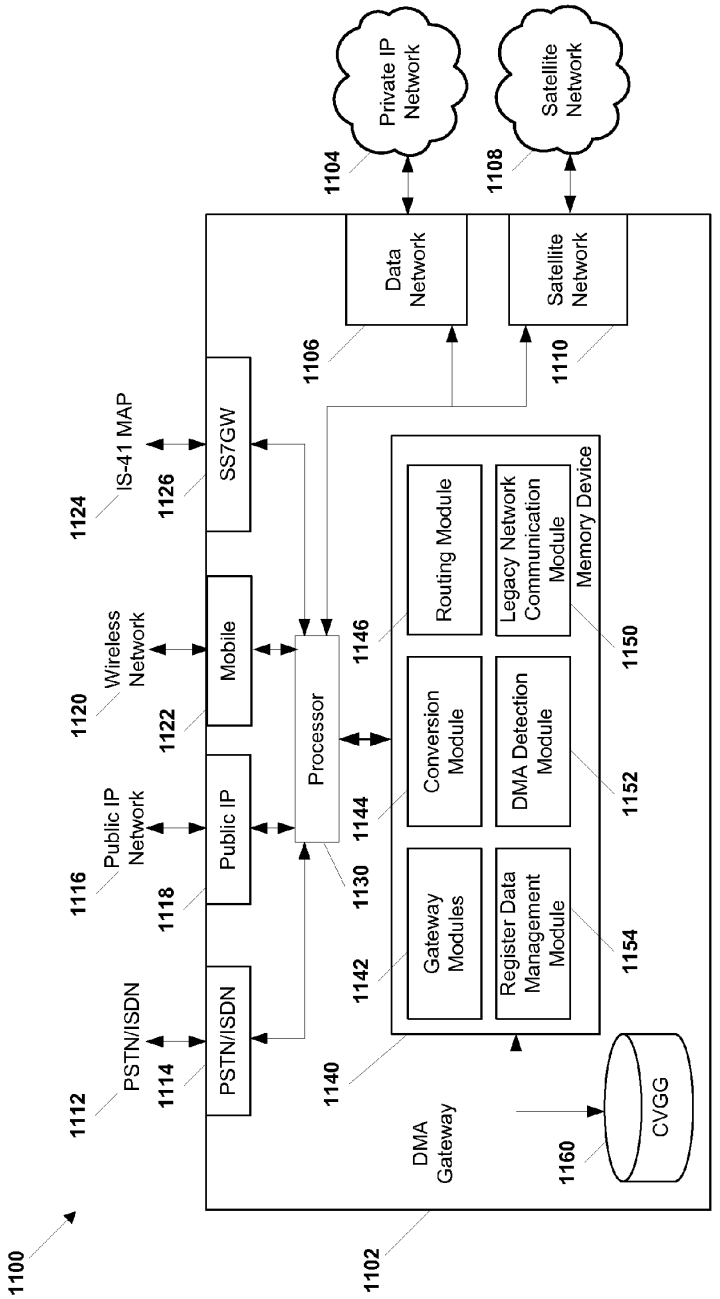
1100
1102
DMA Gateway
1112
PSTN/ISDN
1114
PSTN/ISDN
1116
Public IP Network
1118
Public IP
1120
Wireless Network
1122
Mobile
1124
IS-41 MAP
1126
SS7GW
1130
Processor
1140
1142
Gateway Modules
1144
Conversion Module
1146
Routing Module
Register Data Management Module
1154
DMA Detection Module
1152
Legacy Network Communication Module
1150
Memory Device
1160
CVGG
1106
Data Network
1110
Satellite Network
1104
Private IP Network
1108
Satellite Network

FIG. 11

1200 DMAG 1

	CLR Database	VLR Database	DMAG 2 Community HLR Database	DMAG 3 Community HLR Database	Visitor DMAS Register	. . .
1210	CLR of DMAS 1 in DMAG 1	VLR of DMAS 1 in DMAG 1	HLR of DMAS 1 in DMAG 2	HLR of DMAS 1 in DMAG 3	DMAS x	. . .
1212	CLR of DMAS 2 in DMAG 1	VLR of DMAS 2 in DMAG 1	HLR of DMAS 2 in DMAG 2	HLR of DMAS 2 in DMAG 3	DMAS y	. . .
1214	CLR of DMAS 3 in DMAG 1	VLR of DMAS 3 in DMAG 1	HLR of DMAS 3 in DMAG 2	HLR of DMAS 3 in DMAG 3	DMAS z	. . .
	1220	1222	1224	1226	1228	

1250 DMAG 2

	CLR Database	VLR Database	DMAG 1 Community HLR Database	DMAG 3 Community HLR Database	Visitor DMAS Register	. . .
1260	CLR of DMAS 1 in DMAG 2	VLR of DMAS 1 in DMAG 2	HLR of DMAS 1 in DMAG 1	HLR of DMAS 1 in DMAG 3	DMAS a	. . .
1262	CLR of DMAS 2 in DMAG 2	VLR of DMAS 2 in DMAG 2	HLR of DMAS 2 in DMAG 2	HLR of DMAS 2 in DMAG 3	DMAS b	. . .
1264	CLR of DMAS 3 in DMAG 2	VLR of DMAS 3 in DMAG 2	HLR of DMAS 3 in DMAG 1	HLR of DMAS 3 in DMAG 3	DMAS c	. . .
	1270	1272	1274	1276	1278	

FIG. 12

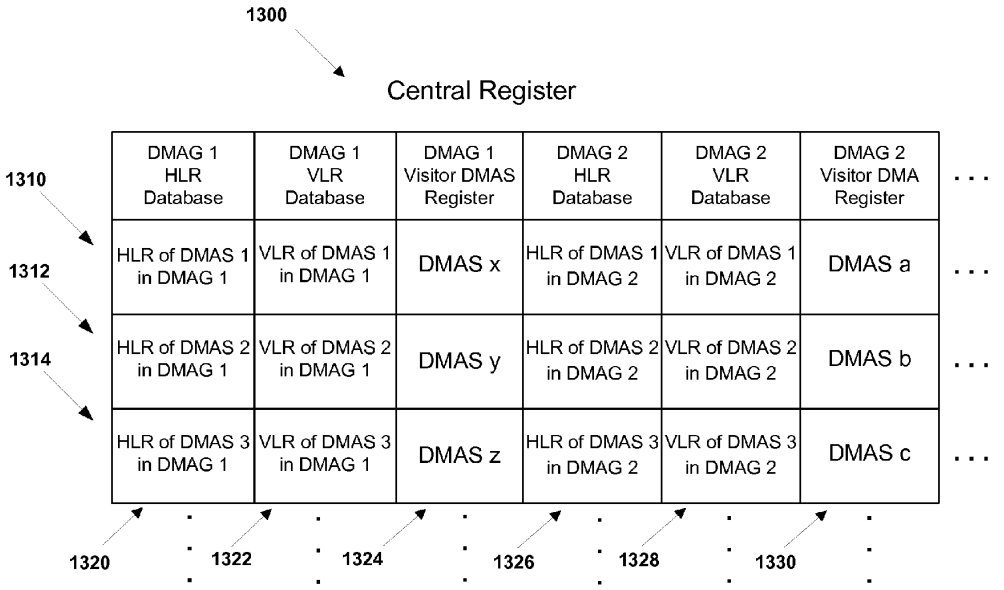
1300
Central Register
1310
1312
1314
DMAG 1 HLR Database
DMAG 1 VLR Database
DMAG 1 Visitor DMAS Register
DMAG 2 HLR Database
DMAG 2 VLR Database
DMAG 2 Visitor DMA Register
HLR of DMAS 1 in DMAG 1
VLR of DMAS 1 in DMAG 1
DMAS x
HLR of DMAS 1 in DMAG 2
VLR of DMAS 1 in DMAG 2
DMAS a
HLR of DMAS 2 in DMAG 1
VLR of DMAS 2 in DMAG 1
DMAS y
HLR of DMAS 2 in DMAG 2
VLR of DMAS 2 in DMAG 2
DMAS b
HLR of DMAS 3 in DMAG 1
VLR of DMAS 3 in DMAG 1
DMAS z
HLR of DMAS 3 in DMAG 2
VLR of DMAS 3 in DMAG 2
DMAS c
1320
1322
1324
1326
1328
1330

FIG. 13

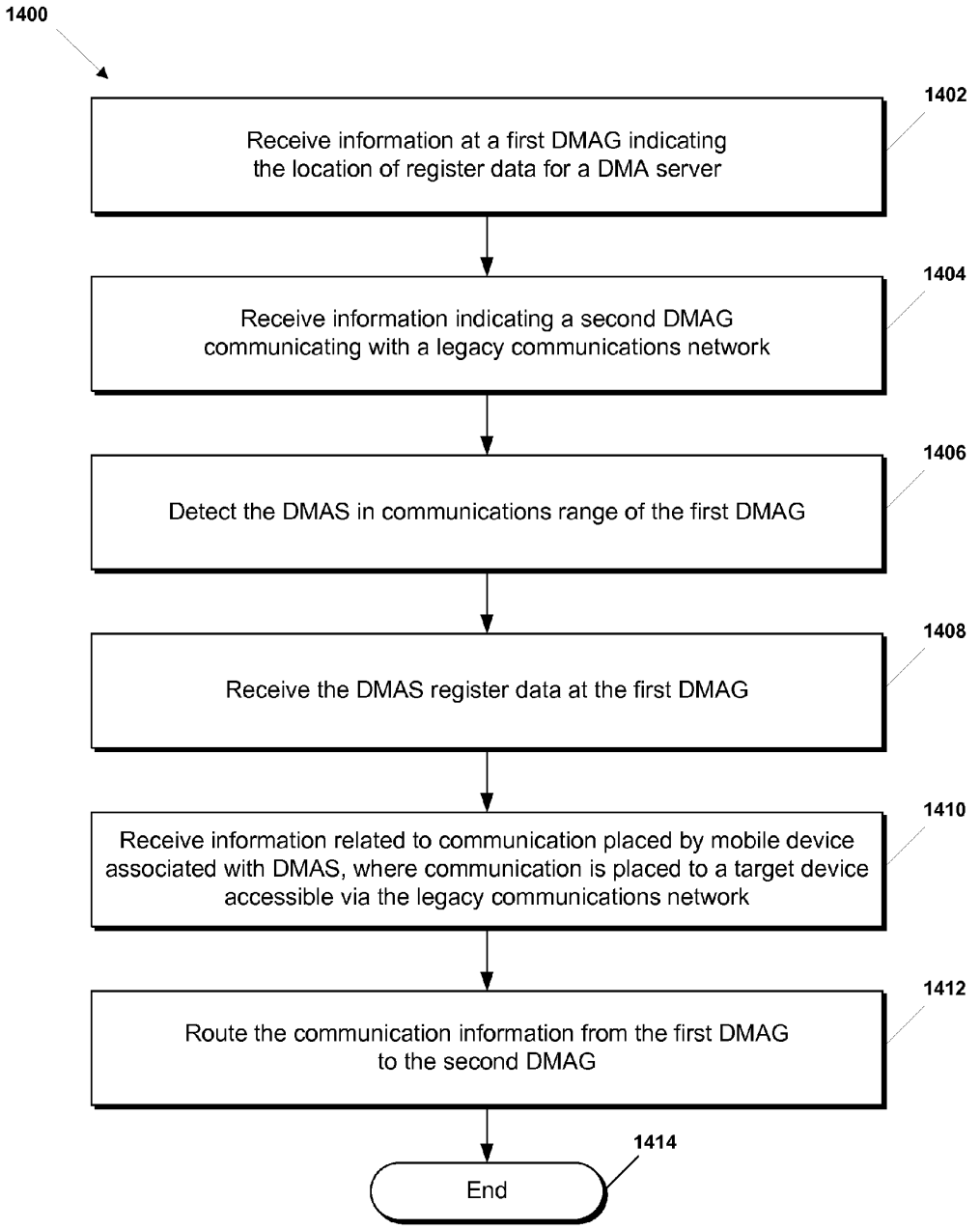
1400
1402
Receive information at a first DMAG indicating the location of register data for a DMA server
1404
Receive information indicating a second DMAG communicating with a legacy communications network
1406
Detect the DMAS in communications range of the first DMAG
1408
Receive the DMAS register data at the first DMAG
1410
Receive information related to communication placed by mobile device associated with DMAS, where communication is placed to a target device accessible via the legacy communications network
1412
Route the communication information from the first DMAG to the second DMAG
1414
End

FIG. 14

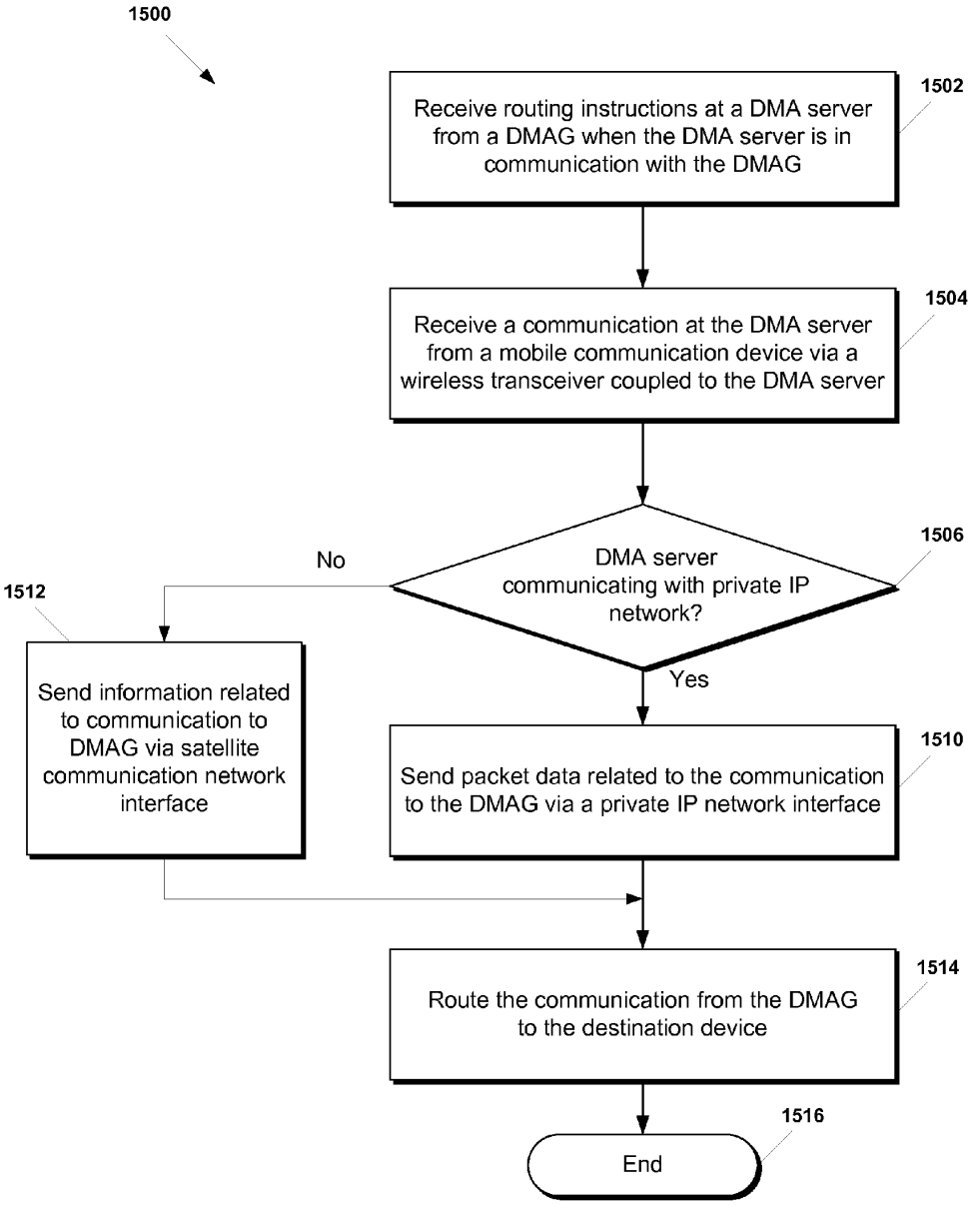
1500
Receive routing instructions at a DMA server from a DMAG when the DMA server is in communication with the DMAG
1502
Receive a communication at the DMA server from a mobile communication device via a wireless transceiver coupled to the DMA server
1504
DMA server communicating with private IP network?
1506
No
Yes
1512
Send information related to communication to DMAG via satellite communication network interface
Send packet data related to the communication to the DMAG via a private IP network interface
1510
Route the communication from the DMAG to the destination device
1514
End
1516

FIG. 15

SYSTEM, METHOD, AND DEVICE FOR ROUTING CALLS USING A DISTRIBUTED MOBILE ARCHITECTURE

CLAIM OF PRIORITY

The present application claims priority from and is a continuation of patent application Ser. No. 12/172,639 filed on Jul. 14, 2008 and entitled "SYSTEM, METHOD, AND DEVICE FOR ROUTING CALLS USING A DISTRIBUTED MOBILE ARCHITECTURE," the contents of which are expressly incorporated herein by reference in their entirety.

FIELD OF THE DISCLOSURE

The present disclosure relates generally to mobile communications systems.

BACKGROUND

Access to basic telephony service is particularly important for rural and isolated communities. Telephony access allows small-scale enterprises, cooperatives, and farmers to obtain accurate information on fair prices for their products and to access regional and national markets. Access also reduces the cost of transportation and supports the local tourist industry. By bringing markets to people via telecommunications, rather than forcing people to leave in search of markets, urban migration is reduced and greater income and employment potential are generated in rural areas.

Unfortunately, the last decade of the telecommunications boom has not alleviated the disparities between urban and rural communities. The average imbalance, in terms of telephone penetration, in Asia, for example, is over ten to one and is often as high as twenty to one. This means that a country whose urban markets have a penetration of four (4) telephone lines per one-hundred (100) inhabitants, e.g., India and Pakistan, has a rural penetration of less than 0.2 per one-hundred (100). The situation is more acute in most African countries and in some parts of Latin America. By comparison, the disparity in average income level between urban and rural residents in the developing world is usually less than four to one.

Current telephone systems are expensive to deploy. For example, a typical cellular system that includes a mobile switching center (MSC), a base station controller (BSC), and a home location register/visitor location register (HLR/VLR) can cost over $2.0 million. Moreover, such a system may require a minimum of ten thousand users in order to be economically viable. In many rural areas, the population is not large enough to support the installation of such a system. Further, in many cases, the conditions in which the equipment (e.g., the MSC, BSC, and HLR/VLR) is to be operated are extremely harsh and environmentally prohibitive. An alternative to such a cellular system can include a wired system, but the costs associated with deploying and maintaining land lines are too high for certain rural areas.

In deploying telephone systems in such situations, a further concern is how to expand an existing telephone system or implement a new phone system capable of operating with existing telephone systems. For example, it may be desirable to allow communications with users serviced by existing public switched telephone network (PSTN) services, Voice over Internet Protocol (VoIP) systems, wireless communications systems, and other systems. Providing compatibility between these systems presents a challenge. Moreover, because some of these systems may be deployed in rural or other remote areas, providing a medium through which newly deployed systems can communicate with one another presents a further challenge.

Accordingly, there exists a need for an improved communications system that is relatively inexpensive to deploy and relatively inexpensive to operate, as well as able to integrate different communications systems.

BRIEF DESCRIPTION OF THE DRAWINGS

The present disclosure is pointed out with particularity in the appended claims. However, other features are described in the following detailed description in conjunction with the accompanying drawings in which:

FIG. **1** is a view of a particular illustrative embodiment of a distributed mobile architecture (DMA) server having a first illustrative form factor;

FIG. **2** is a view of another particular illustrative embodiment of an alternative embodiment of a DMA server having a second illustrative form factor;

FIG. **3** is a diagram of another particular illustrative embodiment of an alternative embodiment of a DMA server having a third illustrative form factor;

FIG. **4** is a diagram of a particular illustrative embodiment of a distributed and associative communications system;

FIG. **5** is a block diagram of a particular illustrative embodiment of a DMA server;

FIG. **6** is a diagram of a particular illustrative embodiment of a network incorporating a plurality of DMA gateways linking a plurality of DMA servers and a legacy network;

FIG. **7** is a diagram of a particular illustrative embodiment of a network incorporating a plurality of satellite-based DMA gateways linking a plurality of DMA servers and a legacy network;

FIG. **8** is a diagram of a particular illustrative embodiment of a network incorporating a DMA gateway linking a plurality of satellite-based DMA servers and ground-based DMA servers;

FIG. **9** is a diagram of a particular illustrative embodiment of a network incorporating a plurality of satellite-based and ground-based DMA gateways linking a plurality of satellite-based and ground-based DMA servers;

FIG. **10** is a diagram of a particular illustrative embodiment of a network incorporating a plurality of DMA gateways and a plurality of legacy networks utilizing a central register database for communications devices accessible within the network;

FIG. **11** is a block diagram of a particular illustrative embodiment of a DMA gateway;

FIG. **12** is a diagram of a particular illustrative embodiment of an exemplary data structure used by a DMA gateway for maintaining information about communications devices accessible through other gateways;

FIG. **13** is a diagram of a particular illustrative embodiment of an exemplary structure maintained in a central database accessible by DMA gateways to maintain information about communications devices accessible throughout a network;

FIG. **14** is a flow chart to illustrate a particular illustrative embodiment of the use of information about accessible networks and devices for routing communications between DMA gateways; and

FIG. **15** is a flow chart to illustrate a particular illustrative embodiment of a selective routing of a communication by a DMA gateway via a private Internet Protocol network or a gateway network.

DETAILED DESCRIPTION

Methods and devices for routing communications between distributed mobile architecture (DMA) servers using DMA gateways are disclosed. Communications information is received at a first DMA gateway for a communications network accessible by a second DMA gateway. The communications information indicates one or more devices that are accessible by one of a DMA server and a legacy communications network. The first DMA gateway and the second DMA gateway participate in a DMA gateway communications network. The communications information is stored by the first DMA gateway (e.g., in a home DMA register of the first DMA gateway). A communication is received at the first DMA gateway for a target device indicated by the communications information to be served by the second DMA gateway. The communication is routed from the first DMA gateway to the target device by relaying the communication from the first DMA gateway to the second DMA gateway via the DMA gateway communications network.

In a particular embodiment, a non-transitory computer-readable storage medium includes instructions that are executable by a processor. The instructions, when executed by the processor, cause the processor to receive communications information at a first DMA gateway of a DMA gateway communications network. The communications information is associated with a communications network that is accessible by a second DMA gateway of the DMA gateway communications network. The communications information is stored at a memory of the first DMA gateway. A communication is received that is associated with a destination device indicated by the communications information to be served by the second DMA gateway. The communication is routed to the destination device by relaying the communication from the first DMA gateway to the second DMA gateway via the DMA gateway communications network.

In another particular embodiment, a non-transitory computer-readable storage medium includes instructions that are executable by a processor. The instructions, when executed by the processor, cause the processor to receive first routing instructions at a first DMA server. The first routing instructions are received when the first DMA server is in a first service area of the first DMA gateway (e.g., an orbiting satellite). A first call is sent to the first DMA gateway via a private Internet Protocol (IP) network according to the first routing instructions. The first call is received at the first DMA server from a first mobile communication device via a wireless transceiver integrated with the first DMA server. The first call is placed to a destination device that is accessible via a legacy communications network. The legacy communications network is accessible via the first DMA gateway.

In another particular embodiment, a non-transitory computer-readable storage medium includes instructions that are executable by a processor. The instructions, when executed by the processor, cause the processor to receive a first call via a first interface of an orbiting satellite. The first interface is adapted to communicate with a legacy communications network, and the call is directed to a mobile communication device that is accessible to a first DMA server. The first call is routed to the first DMA server via a second interface of the orbiting satellite that is adapted to communicate with a private IP network. The first DMA server includes a wireless transceiver to communicate with the mobile communication device.

In another particular embodiment, a first DMA gateway includes a number of interfaces. A first interface is adapted to communicate with a legacy communications network. A second interface is adapted to communicate with a private Internet Protocol (IP) network. A third interface is adapted to communicate with a DMA gateway communications network. The gateway also includes a server having logic adapted to receive legacy network information from a second DMA gateway, the legacy network information indicating that the legacy communications network is in a communications range of the second DMA gateway. The DMA gateway forwards information associated with a communication received from a DMA server via the second interface to the second DMA gateway via the third interface. The call is placed to a destination device accessible via the legacy communications network.

In another particular embodiment, first routing instructions at a first distributed mobile architecture (DMA) server from a first DMA gateway when the first DMA server is in a first service area of the first DMA gateway. The first DMA gateway comprises a first orbiting satellite. A first call received at the first DMA server from a first mobile communications device via a wireless transceiver integrated with the first DMA server is sent to the first DMA gateway via a private Internet Protocol (IP) network according to the first routing instructions. The first call is placed to a destination device accessible via a legacy communications network, the legacy communications network accessible via the first DMA gateway.

In another embodiment, a distributed mobile architecture (DMA) server is coupled to a wireless transceiver. The DMA server includes a first interface adapted to communicate with a private Internet Protocol (IP) network and a second interface adapted to communicate with a satellite communications network. The DMA server includes a server having logic adapted to receive a call from a mobile communications device via the wireless transceiver and send call information related to the call to a DMA gateway. The DMA gateway comprises an orbiting satellite. The call is placed to a destination device accessible via a legacy communications network, the legacy communications network accessible via the DMA gateway.

In yet another embodiment, an orbiting satellite includes a first interface adapted to communicate with a legacy communications network and a second interface adapted to communicate with a private Internet Protocol (IP) network. The satellite also includes a server having logic adapted to receive a call via the first interface. The call is placed to a first mobile communications device accessible to a first distributed mobile architecture (DMA) server. The call is then routed to the first DMA server via the second interface, wherein the first DMA server includes a wireless transceiver to communicate with the first mobile communications device.

According to the present disclosure, one or more of the communications devices between which a communication, such as a voice communication and/or a data communication, participates in a communications network via a DMA server. A DMA server enables the deployment or expansion of a communications network to, for example, rural areas where remoteness of the area to be served or a relatively small customer base to be served make the installation of a conventional telephone system impractical or otherwise undesirable. As further described below according to embodiments of this disclosure, while one or more DMA servers may communicate with one another over a private IP network, when a private IP network is not available, the DMA servers may communicate through a plurality of DMA gateways that communicate with one another through a gateway communications network. For example, the DMA gateways may be

implemented as orbiting satellites that participate in a gateway communications network that includes a satellite communications network.

In introducing the operation of DMA gateways, exemplary embodiments of DMA servers and their operation are described below.

Referring to FIG. **1**, a DMA server is shown and is generally designated **100**. As illustrated in FIG. **1**, the DMA server **100** includes a base **102** and a lid **104**. As shown, the lid **104** is attached to the base by a first lid hinge **106** and a second lid hinge **108**. In a particular embodiment, the lid **104** can be rotated about the first lid hinge **106** and the second lid hinge **108** between an open position, shown in FIG. **1**, and a closed position (not shown) in which the lid **104** overlays the base **102** and the DMA server **100** is essentially shaped like a box or a briefcase.

As indicated in FIG. **1**, the base **102** has a length **110**, a width **112** and a height **114**. FIG. **1** shows that the DMA server **100** includes a keyboard input device **116** that is incorporated in an upper surface of the base **102**. Further, the DMA server **100** includes a mouse input device **118** that is also incorporated into the upper surface of the base **102**. In a particular embodiment, the mouse input device **118** is a touch mouse input device **118**. Additionally, the DMA server **100** includes a left side button **120** and a right side button **122**. In a particular embodiment, the left side button **120** can be used to perform left-click functionality associated with the mouse input device **118**. Moreover, the right side button **122** can be used to perform right-click functionality associated with the mouse input device **118**.

FIG. **1** further indicates that the base **102** of the DMA server **100** is formed with a vent **124** to permit air exchange with the interior of the base **102** of the DMA server **100** and to facilitate cooling of the electronic components of the DMA server **100** housed within the base **102**. Moreover, the base **102** of the DMA server **100** includes a handle **126** that is attached to the base **102** via a first handle hinge **128** and a second handle hinge **130**. The base **102** also includes a pair of latch engagement notches **132**.

As shown in FIG. **1**, the lid **104** includes a flat panel display **134** incorporated therein. When the lid **104** is closed, the display **134** is adjacent to the keyboard **116**. Moreover, when the lid **104** is closed, the lid **104** and the base **102** cooperate to protect the display **134**, the keyboard **116**, the mouse **118**, and the buttons **120**, **122**. FIG. **1** also depicts a latch **136** that is incorporated into the lid **104**. When the lid **104** is closed, the latch **136** can engage the latch engagement notches **132** in order to lock the lid in the closed position. As depicted in FIG. **1**, an antenna **138** is incorporated into the lid **104**. The antenna **138** can be extended during operation and retracted when the DMA server **100** is not operating.

In a particular embodiment, the length **110** of the base **102** is 31.0 centimeters. Further, in a particular embodiment, the width **112** of the base **102** is 25.5 centimeters. Additionally, in a particular embodiment, the height **114** of the base **102** with the lid **104** in the closed position is 7.0 centimeters. Accordingly, the DMA server **100** has a total volume of 5,533.5 centimeters cubed and a footprint area of 790.5 centimeters squared. Further, in a particular embodiment, the DMA server **100** weighs approximately 5.8 kilograms (kg). As such, in a particular embodiment, the DMA server **100** has a total volume that is less than 6,000 centimeters cubed, a footprint area that is less than 800 centimeters squared, and a weight that is less than 6.0 kilograms.

In a particular embodiment, the DMA server **100** is relatively rugged. Particularly, the DMA server **100** is operable in a temperature range from negative twenty degrees Celsius to positive fifty-five degrees Celsius (−20° C. to 55° C.). Also, the DMA server **100** is substantially shock resistant and can withstand a one meter drop. Further, the DMA server **100** is substantially weather resistant, substantially dust resistant, and substantially sand resistant. The DMA server **100** is portable and it can be mounted in a vehicle or carried like a brief case. Further, multiple DMA servers **100** can be deployed as described herein.

FIG. **2** depicts an alternative embodiment of a distributed mobile architecture (DMA) server that is generally designated **200**. As shown in FIG. **2**, the DMA server **200** includes a base **202** and a lid **204** that is coupled to the base **202** via a plurality of fasteners (not shown). Additionally, the DMA server **200** has a length **208**, a width **210**, and a height **212**. Further, the base **202** of the DMA server **200** includes a first vent **214**, a second vent **216**, and a third vent **218**. In a particular embodiment, the vents **214**, **216**, **218** permit air exchange with the interior of the base **202** of the DMA server **200** and facilitate cooling of the electronic components of the DMA server **200** housed within the base **202**. As shown in FIG. **2**, the DMA server **200** includes an access window **220**. One or more interfaces **222**, e.g., wires can be accessed via the access window **220** and coupled to a base transceiver station (BTS) during deployment of the DMA server **200**. As shown in FIG. **2**, the DMA server **200** can be mounted within a vehicle **224**. Further, multiple DMA servers **200** can be deployed as described herein.

In a particular embodiment, the length **208** of the base **202** is 92.0 centimeters. Further, in a particular embodiment, the width **210** of the base **202** is 45.0 centimeters. Additionally, in a particular embodiment, the height **212** of the base **202** is 34.0 centimeters. Accordingly, the DMA server **200** has a total volume of approximately 140,760 centimeters cubed and a footprint area of approximately 4,140 centimeters squared. Further, in a particular embodiment, the DMA server **200** weighs approximately 48 kilograms (kg). As such, in a particular embodiment, the DMA server **100** has a total volume that is less than 150,000 centimeters cubed, a footprint area that is less than 5,000 centimeters squared, and a weight that is less than 50.0 kilograms.

FIG. **3** illustrates another alternative embodiment of a distributed mobile architecture (DMA) server that is generally designated **300**. As depicted in FIG. **3**, the DMA server **300** includes a housing **302** that has a length **304**, a width **306**, and a height **308**. Additionally, the housing **302** can be formed with a first vent **310** and a second vent **312**. In a particular embodiment, the vents **310**, **312** permit air exchange with the interior of the housing **302** of the DMA server **300** and facilitate cooling of the electronic components of the DMA server **300** within the housing **302**.

As shown in FIG. **3**, at least one side of the housing **302** is formed with a rib **314** to enable the DMA server **300** to be slid into a server rack (not shown). Further, the DMA server **300** includes a clip **316** that is coupled to the housing **302** via a fastener, e.g., a bolt. The clip **316** can be engaged with a server rack (not shown) to prevent the DMA server **300** from unintentionally sliding out of the server rack (not shown).

In a particular embodiment, the length **304** of the housing **302** is approximately 76.2 centimeters. Further, in a particular embodiment, the width **306** of the housing **302** is approximately 48.2 centimeters. Additionally, in a particular embodiment, the height **308** of the housing **302** is approximately 4.3 centimeters. Accordingly, the DMA server **300** has a total volume of approximately 15,756.5 centimeters cubed and a footprint area of approximately 3,672.9 centimeters squared. Further, in a particular embodiment, the DMA server **300** weighs approximately 17.7 kilograms (kg). Also, in a particu-

lar embodiment, the DMA server **300** is stackable in order to support various capacity requirements. As such, in a particular embodiment, the DMA server **100** has a total volume that is less than 16,000 centimeters cubed, a footprint area that is less than 4,000 centimeters squared, and a weight that is less than 20.0 kilograms.

The description of embodiments of DMA servers with reference to FIGS. **1-3** are provided for illustration, not limitation. DMA servers also may be embodied in any other suitable form. For example, as described further below, a DMA server may be incorporated within an orbiting satellite that communicates with DMA gateways and other devices via satellite and ground-based communication networks.

FIG. **4** illustrates a non-limiting, exemplary embodiment of a distributive and associated telecommunications system generally designated **400**. As depicted in FIG. **4**, the system **400** includes four cellular coverage sites **402**. Each coverage site **402** includes an antenna **404**. In one embodiment, the antenna **404** is connected to a transceiver belonging to a base transceiver station (BTS) and the BTS is a 3-sector BTS. FIG. **4** also indicates that a distributed mobile architecture (DMA) server **406** (abbreviated in FIG. **4** and figures as "DMAS") can be connected to each antenna **404**. In one embodiment, each DMA server **406** is physically and directly connected to its respective antenna **404**, e.g., by a wire or cable **408**. Further, in an illustrative embodiment, the DMA servers **406** can be any of the DMA servers shown in FIG. **1**, FIG. **2**, and FIG. **3**.

As illustrated in FIG. **4**, each DMA server **406** is interconnected with the other DMA servers **406** via an Internet protocol network **410**. As such, there exists a peer-to-peer connection **412** between each DMA server **406** in the system **400**. As described in detail below, the DMA servers **406** can handle telephony traffic that is communicated at each antenna **404**. For example, the DMA servers **406** can switch and route calls received via each antenna **404**. Additionally, the DMA servers **406** can hand-off calls to each other as mobile communications devices move around and between the cellular coverage sites **402**. The DMA servers **406** can communicate with each other via the IP network **410** and can further transmit calls to each other via the IP network **410**. It should be understood that more than four cellular coverage sites **402** can be included in the system and that the inclusion of only four cellular coverage sites **402** in FIG. **4** is merely for clarity and explanation purposes.

Within the distributed and associative telecommunications system **400** the controlling logic can be distributed and decentralized. Moreover, the wireless coverage provided by the disclosed system **400** is self-healing and redundant. In other words, due to the interconnectivity via the IP network **410**, if one or more of the DMA servers **406** loses powers, fails, or is otherwise inoperable, telephony traffic handled by the inoperable DMA server **406** can re-routed to one of the remaining operable DMA servers **406**. Additionally, user data stored in a database, e.g., a home location register (HLR) or a visitor location register (VLR), can be distributed equally and fully among all of the DMA servers **406**. It can also be appreciated that new cellular coverage sites can be easily added to the system **400** as the demand for users increases. Specifically, a DMA server can be deployed as described below, connected to an antenna, connected to the IP network, and activated to provide cellular coverage in a new area.

FIG. **5** shows an exemplary, non-limiting, detailed embodiment of a DMA server, e.g., one of the DMA servers **406** described in conjunction with FIG. **4**. Further, any of the DMA servers **100**, **200**, **300** shown in FIG. **1**, FIG. **2**, and FIG. **3** can include the components depicted in FIG. **5** and described herein.

In a particular embodiment, the DMA server **406** is essentially a processor, or computer, having a housing and a computer readable medium **500** that is disposed therein. A power supply **502** can also be disposed within the housing of the DMA server **406** in order to provide power to the DMA server **406**. The power supply **502** can be a rechargeable battery disposed within the DMA server **406** or it can be external to the DMA server **406**, i.e., a standard power outlet. Moreover, a cooling system **504**, e.g., a fan with a thermostat, can be within the DMA server **406** in order to keep the DMA server **406** from overheating. In an alternative embodiment, the DMA server **406** can be a single board processor that does not require a fan.

As depicted in FIG. **5**, the DMA server **406** may include a mobile switching center (MSC) module **506** and a base station controller (BSC) module **508** embedded within the computer readable medium **500**. In an exemplary, non-limiting embodiment, the MSC module **506** can include a gatekeeper (GK) **510** that is connected to several gateways. For example, a circuit gateway (CGW) **512** can be connected to the GK **510** and can provide connectivity to an integrated services digital network/public switched telephone network (ISDN/PSTN) interface **514**. The CGW **512** can provide a circuit switched to packet data conversion. In an exemplary, non-limiting embodiment, the PSTN portion of the ISDN/PSTN interface **514** can be an inter-office interface that uses the Bellcore industry standard ISDN user part (ISUP) signaling on a signaling system seven (SS7) link set. Moreover, the voice trunks on this interface can be timeslots on a T1 connection. Inbound and outbound voice calls can be supported on the ISDN portion of the ISDN/PSTN interface **514**.

As further illustrated in FIG. **5**, a packet data server node (PDSN) gateway **516** for CDMA, or a Gateway GPRS Support Node (GGSN) for Global System for Mobile Communication (GSM), and a Session Initiation Protocol (SIP) gateway **518** can also be connected to the GK **510**. The PDSN gateway **516** and the SIP gateway **518** can provide connectivity to an IP interface **520**. Further, the PDSN gateway **516** or a GGSN can establish a reverse tunnel with the PDSN or GGSN gateway **516** using generic routing encapsulation (GRE). Moreover, the PDSN gateway **516**, or GGSN, can implement the Pseudo Random Function (PRF)/Foreign Agent (FA) functionality of the DMA server **406** which supports mobile IP functions.

FIG. **5** further shows an SS7 gateway **522** that provides connectivity to an American National Standards Institute 41 (ANSI-41) and GSM Mobile Application Part (MAP) interface **524**. In a particular embodiment, the ANSI-41 interface can be an SS7 TCAP/SCCP interface on the same SS7 link set used for ISUP signaling. The same SS7 point code can be used to identify the DMA server **406** in the ANSI-41 network. The ANSI-41 interface can be used for roamer registration. Further, in an exemplary, non-limiting embodiment, the GSM MAP interface can be an SS7 TCAP/SCCP interface on the same SS7 link set used for ISUP signaling. It can be appreciated that there are different protocols of MAP from MAP/B to MAP/I, but in the illustrative embodiment, the different MAP/x protocols are not stacked—they are used independently. As described with reference to FIG. **11**, the SS7 interface may be included in either the DMA server **406** or the DMA gateway **1102**.

As depicted in FIG. **5**, a media gateway **526** can also be coupled to the GK **510**. In an exemplary, non-limiting embodiment, the media gateway **526** can include cellular

transcoders, one or more intranet gateways, conferencing bridges, and group calling functionality. Further, an authentication, authorization, and accounting (AAA) module **528** can be coupled to the GK **510**. In an exemplary, non-limiting embodiment, there are three levels of authentication management. The highest level is for administration, the mid-level is for operations, and the lowest level is for normal users. The functions of the AAA module **528** can be included in the user level.

In an exemplary, non-limiting embodiment, the GK **510** can act as an AAA server and a feather server to support advanced supplementary service, short message service, etc. Moreover, the GK **510** can act as a call manager and can support ISUP and PSTN function calls. Additionally, the GK **510** can act as a signal gateway, e.g., IP to SS7 inter-working, ISUP, GSM MAP or ANSI-41 to PSTN and ANSI-42/GSM. The GK **510** can also function as a data call server.

As illustrated in FIG. **5**, the BSC module **508** includes a cellular radio network controller (CRNC) **530** and a cellular selection/distribution unit (CSDU) **532** that are connected to a call protocol controller (CPC) **534**. In turn, the CPC **534** can be connected to a plurality of base transceiver stations (BTSs) **536**. Specifically, the DMA server **406** includes a BTS interface **538** at the CPC **534** that can be physically and directly connected to the BTSs **536**. The CRNC **530** can provide cellular radio resource management and cellular call control. The CSDU **532** can provide Fundamental Channel (FCH) soft handoff and distribution, Link Access Control (LAC) processing for inband signaling, multiplexer (MUX) functions, and centralized power control. Further, the CPC **534** can convert a T1 or E1 message or ATM interface to a data packet message. In a particular embodiment, each BTS **536** supports signals and traffic up to the front point of the CPC **534**, e.g., up to the BTS interface **538**. Further, in a particular embodiment, the CRNC **530**, the CPC **534**, the CSDU **532** and the OAMP **540** can perform one or more of the functions of legacy Base Station Controllers (BSC).

In an exemplary, non-limiting embodiment, the BTS interface **538** can be an IS-95A OR IS-2000 interface over E1 or ATM, or the BTS interface **538** can be a GSM BTS interface using MAP or customized application for mobile network enhanced logic (CAMEL). In an illustrative embodiment, the CPC **534** can be connected to one or more BTSs **536**. FIG. **5** further shows that the BSC module **508** includes an operations, administration, maintenance, and provisioning (OAMP) module **540**. In an exemplary, non-limiting embodiment, the OAMP module **540** can use simple network management protocol (SNMP) for operations interfaces. Further, the OAMP module **540** can include a JAVA user interface. The OAMP module **540** can also include a software agent that is assigned to each component within the DMA server **406**. The agents independently monitor their respective components. Moreover, each agent can provision its respective component.

When deployed in a network, such as illustrated in FIG. **4**, embodiments of DMA servers are configured to handle the handing off of communications when, for example, a mobile device passes from a coverage site **402** (FIG. **4**) covered serviced by one DMA server **406** to another coverage site **402** serviced by another DMA server **406**. As previously described, the DMA servers **406** participate in an IP network **410** through which the communications are routed between the DMA servers **406**. However, in not all cases will the DMA servers **406** be able to participate as peers in an IP network **410**. For example, if one or more of the coverage sites **402** are in rural locations or other locations remote from other coverage sites **402**, there may not be access to the IP network **410** in the remote coverage sites **402**. Accordingly, embodiments of the present disclosure describe DMA gateways to enable DMA servers to communicate with one another when one or more of the DMA servers cannot participate directly in the IP network. In addition, embodiments of the DMA gateways also enable legacy networks and devices participating in the legacy networks to communicate with devices serviced by one or more of the DMA servers as further described below.

Because of the mobility of various forms of the DMA servers and devices that may communicate via these servers, as well as the DMA gateways described below, the communications network accounts for the movement of these devices. In other words, as the devices move, information regarding the accessibility of these devices and how communications are routed among them is dynamic. Thus, even when such devices move during the course of a communication, information pertaining to the routing of the communication is updated to support continuation of the communication.

FIG. **6** illustrates a network **600** that includes a first DMA gateway (abbreviated as "DMAG" in FIG. **6** and other figures) **602** and a second DMA gateway **604** that communicate with each other over a DMA gateway network **606**. The DMA gateway network **606** may include a dedicated wired or wireless communication medium or be included within a network carrying other communications. The second DMA gateway **604** communicates with a legacy network that, for example, includes a public switched telephone network **610** that services communication with wired, landline devices such as landline telephone **612**. The DMA gateway also may enable communication with public IP networks that enable data communications, Voice over Internet Protocol (VoIP) communications, and other communications, as well as other types of legacy networks. Although a pair of DMA gateways **602** and **604** and a single legacy network **610** are shown in FIG. **6**, any number of DMA gateways and legacy networks may participate in the network **600**.

In addition to the DMA gateways **602** and **604** and the legacy network **610**, the network **600** includes two groups of DMA servers in which the DMA servers communicate with each other over separate private IP networks. For example, in a first group communicating via a first private IP network **620**, three DMA servers **622**, **624**, and **626** communicate with each other. In a second group communicating via a second private IP network **640**, three DMA servers **642**, **644**, and **646** communicate with each other. Two different groups each including three DMA servers are shown for illustration. However, it will be appreciated that any number of groups of DMA servers could communicate with each other within each of the groups, and any number of groups could be bridged using DMA gateways as described below to enable communications between devices associated with different DMA servers in different groups.

Each of the DMA servers may service a plurality of voice and/or data communications devices. For example, a first DMA server **622**, through an associated wireless transceiver, may service a plurality of communications devices such as a first wireless telephone device **632**. As previously described with reference to FIG. **4**, the first wireless telephone device **632** may communicate with devices serviced by other DMA servers that participate in the first private IP network **620**. Thus, for example, the first wireless telephone device **632** would be able to engage in voice and/or data communications with a second wireless telephone device **634** serviced by a second DMA server **624**. Also, it should be appreciated that the second wireless telephone device may communicate with other devices, such as a third wireless telephone device **636**

that is serviced by a same DMA server, such as the second DMA server **624**. Although the DMA servers in FIG. **6** are only shown servicing wireless telephone devices, it should be appreciated that other devices, such as computers and other communication devices also may participate in the network **600** by communicating through the DMA servers.

As shown in FIG. **6**, the groups of DMA servers communicating via the two private IP networks **620** and **640** are separate networks. The wireless telephone devices **632**, **634**, and **636** serviced by DMA servers **622** and **624** participating in the first private IP network **620** do not have a network connection with any of the DMA servers **642**, **644**, and **646** that communicate with each other via the second private IP network. Thus, a fourth wireless telephone device **652** in communication with a fourth DMA server **642** can communicate with a fifth wireless telephone device **654** serviced by a fifth DMA server **644** because the DMA servers **642** and **644** can communicate with each other via the second private IP network **640**. Similarly, the sixth wireless telephone device **656** and the seventh wireless telephone device **658** can communicate with each other through the sixth DMA server **646** with which each communicates and each can communicate with the other wireless telephone devices **652** and **654** serviced by the other DMA servers **642** and **644** participating in the second private IP network. However, without a bridge between the first private IP network **620** and the second private IP network **640**, neither the DMA servers nor the wireless telephone devices serviced by each of the private IP networks **620** and **640** can communicate with devices serviced by the other private IP network. Similarly, neither the DMA servers nor the wireless telephone devices serviced by each of the private IP network **620** and **640** can communicate with the public switched telephone network **610** or any of the devices, such as the landline telephone device **612**, serviced by the public switched telephone network **610**.

Embodiments of the present disclosure enable devices on separate networks to communicate with each other via DMA gateways that bridge separate network and communications systems. In the example of FIG. **6**, the first private IP network **620** communicates with the first DMA gateway **602** and the second private IP network **640** communicates with the second DMA gateway **604**. The DMA gateways **602** and **604** are configured to route communications from one private IP network to another and the DMA gateways **602** and **604** are in communication with each other via the DMA gateway network **606**. As a result, the DMA gateways **602** and **604** can route communications from the DMA servers **622**, **624**, and **626** and the devices they service to the DMA servers **642**, **644**, and **646** and the devices they service and vice versa. Also, because the second DMA gateway is coupled with the second public switched telephone network **640**, the wireless telephone devices **652**, **654**, **656**, and **658** and other devices serviced by the DMA servers **642**, **644**, and **646** can communicate with the landline telephone device **612** and other devices serviced by the public switched telephone network **610**. In short, the DMA gateways can provide communications between wireless devices serviced by associated DMA servers and wired or wireless devices serviced by legacy networks coupled with the DMA gateways.

To facilitate communications between devices serviced by different networks, the DMA gateways **602** and **604** maintain information identifying the devices that each services. For example, when the first wireless telephone device **932** initiates a communication to the fourth wireless telephone device **952**, the first DMA gateway **602** accesses data identifying what other DMA gateway, if any, services the fourth wireless telephone device and which DMA server or other network or device associated with the first DMA gateway services the targeted fourth wireless telephone device **952**. DMA gateways provide information to one another regarding the communications networks they service by exchanging register data describing the networks they service. The register data describes devices for which the networks they service are the home network as well as for what devices are visiting on their networks. This information is exchanged directly between the DMA gateways or through a central database described further below with reference to FIG. **10**.

A DMA server may associate itself with different DMA gateways. For example, as described with reference to FIGS. **1** and **2**, a DMA server may include a mobile device that is easily moved from one place to another. A mobile DMA server that communicates wirelessly with a private IP network and the DMA gateway servicing that private IP network may move out of communications range of a DMA gateway with which it was previously associated into communications range with another DMA gateway. For further example, for purposes of traffic management, fault tolerance, or other reasons, it may be desirable to reassociate a DMA server previously associated with one DMA gateway to another DMA gateway. This reassociation may be initiated manually or automatically by the DMA server, the DMA gateway, or any combination thereof. Thus, for example, the fourth DMA server **642** may be reassociated with the first private IP network **620** and the first DMA gateway **602** servicing the first private IP network **620** as shown by the dashed line **660** in FIG. **6**. Because the DMA gateways **602** and **604** bridge the private IP networks **620** and **640**, devices serviced by the fourth DMA server **642**, such as the fourth wireless telephone device **652** may continue to communicate with the wireless telephone devices **654**, **656**, and **658** serviced by the DMA servers **644** and **646** associated with the second private IP network **640**.

The DMA gateways and DMA servers can be arrayed in any number of ways to facilitate the deployment and proliferation of communications networks. For example, FIG. **7** illustrates a network **700** that includes satellite-based DMA gateways including a first satellite-based DMA gateway **702** and a second satellite-based DMA gateway **704**. The satellite-based DMA gateways **702** and **704** are placed in orbits suitable to enable communications with ground-based private IP networks **720** and **740** and a ground-based legacy network **710**. The satellite-based DMA gateways **702** and **704** communicate with each other via a satellite communications network **706**. The second satellite-based DMA gateway **704** communicates with a legacy network, such as a public switched telephone network **710**, over a communications uplink **714** via the same satellite communications network **706** through which the satellite-based DMA gateways **702** and **704** communicate or another uplink communications medium. The satellite-based DMA gateways **702** and **704** communicate with private IP networks **720** and **740** that may include ground-based private IP networks, via the same satellite communications network **706** or other uplink communications media. An advantage of including satellite-based DMA gateways is the ability to bridge DMA servers or groups of DMA servers with one another even though the DMA servers or groups of DMA servers may be disposed remotely from each other where ground-based DMA gateways or ground-based communications media between the DMA servers are overtaxed, unreliable, unavailable, or otherwise undesirable.

Using the satellite-based DMA gateways **702** and **704**, communications between the DMA servers, the devices they serve, and the legacy network operates in a similar manner to

the communications between devices as described with reference to FIG. **6**. A first group of DMA servers **722**, **724**, and **726** communicate via a first private IP network **720**. A first wireless telephone device **732** in communication with a first DMA server **722** is able to communicate with a second wire telephone device **734** in communication with a second DMA server **724** via the first private IP network **720**. Further, the first wireless telephone device **732** is enabled, via the first DMA server **722** and the first private IP network **720**, to communicate with the first DMA gateway **702**. Then, via the satellite communications network **706**, the first DMA gateway **702** is able to communicate with the second DMA gateway **704** to enable communications with devices served by the second private IP network **740**. Thus, the DMA gateways **702** and **704** allow the first wireless telephone device **732** to communicate with a third wireless telephone device **762** even though the wireless telephone devices **732** and **762** participate in separate private IP networks **720** and **740**. In addition, because the second DMA gateway **704** is in communication with both the second private IP network **740** and the public switched telephone network **710**, the second DMA gateway **704** enables mobile-to-land communications between third wireless telephone device **762** and a wired landline device **712**. The use of satellite-based DMA gateways **702** and **704** enables this communication even as vast distances separate the communication devices and there are little or no land-based communications networks between the devices.

FIG. **8** illustrates a communications network **800** in which, instead of utilizing satellite-based DMA gateways, employs a ground-based DMA gateway **830** facilitating communications between satellite-based DMA servers **810** and **820**. In areas where, for example, a ground-based DMA server cannot be employed or the distance between wireless communication devices **812** and **814** is so large that one or more DMA servers may not be able to effectively service the wireless communication devices **812** and **814**, it may be desirable to enable communications with the deployment of satellite-based DMA servers such as DMA servers **810** and **820**. In such a case, the wireless communications devices **812** and **814** may include wireless satellite communications devices or other devices with access to a satellite uplink communications medium. As in the case of DMA servers previously described, a first wireless communications device **812** in communication with a first DMA server **810** may wirelessly communicate with a second wireless communications device **814** that is also in communication with the first DMA server **810**.

In addition, because the first DMA server **810** is in communication with a ground-based DMA gateway **830** via a suitable uplink communications medium **840**, the first DMA server **810** is able to route communications between the devices it serves and other devices in communication with the DMA gateway **830**. For example, the DMA gateway **830** is in communication with a first ground-based DMA server **850** that services a first wireless telephone device **852**. As a result, the wireless communications devices **812** and **814** are able to communicate with the first wireless telephone device **852**. Similarly, the DMA gateway **830** also is in communication with a private IP network **880** that provides communications between the second satellite-based DMA server **820** and two ground-based DMA servers **860** and **870**. As a result, the DMA gateway **830** enables communications between the wireless communications devices **812** and **814** serviced by the first satellite-based DMA server **810**, the first wireless telephone device **852** serviced by the ground-based DMA server **850**, a second wireless telephone device **862** serviced by a second ground-based DMA server **860**, a third wireless telephone device **872** serviced by a third ground-based DMA server **870**, and any devices (not shown in FIG. **8**) serviced by the second satellite-based DMA server **820**. In addition, if the DMA gateway **830** were in communication with one or more legacy networks, the DMA gateway **830** could enable communications between devices serviced by the legacy networks and devices serviced by the DMA servers **810**, **820**, **860**, and **870** in communication with the DMA gateway **830**.

FIG. **9** illustrates a communications network **900** illustrating how a communications network may include a combination of satellite-based and ground-based DMA servers and satellite-based and ground-based DMA gateways. Embodiments of the present disclosure are not restrictive to including only ground-based or satellite-based DMA gateways or DMA servers and thus provide flexibility in creating and proliferating communications networks based on the communications needs for which the network is deployed.

A first satellite-based DMA server **910** communicates with wireless communications devices **912** and **914**. The first satellite-based DMA server **910** also is in communications with a satellite communications network **940** and a private IP network **950**. Via the satellite communications network **940**, first the satellite-based DMA server is able to communicate with a satellite-based DMA gateway **930** to, for example, enable communications between devices served by a first ground-based DMA server, such as a first wireless telephone **992**. Via the private IP network **950**, the satellite-based DMA server **910** also is able to communicate with other DMA gateways, such as a first ground-based DMA gateway **960** and a second ground-based DMA gateway **970**. Thus, the devices served by the satellite-based DMA server **910** would be able to communicate with devices in communication with the ground-based DMA gateways **960** and **970**, such as the second wireless telephone device **974** that is serviced by a second ground-based DMA server **972** in communication with the second ground-based DMA gateway **970**. In sum, as described in the particular illustrative embodiments depicted in FIGS. **6-9**, satellite-based or ground-based DMA servers and satellite-based or ground-based gateways can be deployed as desired to enable communications between various communications devices.

To facilitate communications between devices serviced by different networks, the DMA gateways maintain information identifying the devices that each services. For example, a user of a wireless telephone device serviced by a first DMA server may send a communication to the user of the target wireless telephone device that is serviced by a second DMA server. The first and second DMA servers both are in communication with a DMA gateway that enables communications between the devices serviced by the different DMA servers. The DMA gateway is configured to route the communications by accessing information indicating which DMA servers provide service to which wireless devices. The DMA gateway may maintain the information locally in the DMA gateway or access information maintained in a central register accessible to the DMA gateway. When the information is maintained locally in the DMA gateway, DMA gateways in the network provide information to one another regarding the devices they service by exchanging register data describing the devices they service. The register data describes devices for which the networks they service are the home network as well as for what devices are visiting on their networks. This information is exchanged directly between the DMA gateways or through a central database described further below with reference to FIG. **10**.

FIG. **10** shows a network **1000** including a pair of DMA gateways **1010** and **1050** that facilitate communications

between devices on different types of networks. A first DMA gateway **1010** communicates with a plurality of DMA servers **1012**, **1014**, and **1016** and a plurality of legacy networks **1020**, **1030**, and **1040**. As described below with reference to FIG. **11**, the DMA gateway **1010** includes interfaces configured to communicate with a PSTN **1020**, a mobile switching center (MSC) **1030** such as used by wireless telephones and communications devices, and a public IP network **1040**. The DMA gateway **1010** thus permits communication between devices serviced by the DMA servers **1012**, **1014**, and **1016** and devices serviced by the associated legacy networks **1020**, **1030**, and **1040**.

In addition, the DMA gateway **1010**, through the satellite communications network **1080** or other DMA gateway network, communicates with other DMA gateways to support communications between the devices serviced by different DMA gateways. For example, the second DMA gateway **1050** is associated with a private IP network **1060** that services a plurality of DMA servers **1052**, **1054**, **1056** and the devices they serve. Thus, through the DMA gateways **1010** and **1050**, devices serviced by one of the DMA servers **1012**, **1014**, and **1016** or devices serviced by the legacy networks **1020**, **1030**, and **1040**, can communicate with devices serviced by the DMA servers **1052**, **1054**, and **1056** or other networks serviced by the second DMA gateway **1050**. The private IP network **1060** also includes a central register database **1070** that maintains information serviced by DMA gateways and DMA servers within the network **1000**. The operation of this central register database **1070** is described further below.

As shown in FIG. **10**, one or more of the DMA servers **1012**, **1014**, and **1016** may communicate directly with a respective DMA gateway, such as DMA gateway **1010**, through a satellite uplink or other communications medium. Alternatively, one or other DMA servers **1052**, **1054**, and **1056** may communicate with a DMA gateway, such as DMA gateway **1050**, via a private IP network **1060** in which the DMA servers **1052**, **1054**, and **1056** and the DMA gateway **1060** participate. When a DMA server communicates with a DMA gateway over a private IP network, the respective DMA server and DMA gateway may communicate with each other by transmitting IP packet data over the private IP network. On the other hand, when the DMA server communicates with the DMA gateway via a different medium, the DMA server and DMA gateway may communicate with each other according to the protocol of the available medium.

In the networks of FIGS. **6-10**, embodiments of DMA gateways exchange communications information identifying devices serviced by one or more DMA servers or other communications networks that the DMA gateways service. When a DMA gateway detects that it is in communications range with one or more DMA servers, the DMA gateway sends communications information from the DMA servers or other communications networks to one or more other DMA gateways or to a central database, such as the central register database **1070**. The communications information may include a notification of what DMA server or servers with which the DMA gateway is in communication. As DMA gateways move between communications ranges of various DMA servers or vice versa, the DMA gateways may send additional notifications or other information to update the previously-communicated communications information as to what communications networks are accessible to the various DMA gateways.

The communications information, in one embodiment, includes register information, such as home location register (HLR) information and visitor location register (VLR) information maintained by the DMA servers or other communications networks. As described with reference to FIG. **1** and FIG. **2**, because a DMA server may include a portable or mobile device, the DMA server information also may identify whether the DMA gateway is a home gateway for the DMA server or whether the DMA server is temporarily registered with the DMA gateway in a visitor DMA register.

When another DMA gateway receives the DMA server information from a first DMA gateway, a second DMA gateway stores the DMA server information in a home DMA register in which the second DMA gateway also stores information regarding the devices it services. The second DMA gateway receives a communication from one of the devices it services targeted for a wireless device that is serviced by the first DMA gateway. The second DMA gateway then routes the communication via a DMA gateway network to the first DMA gateway. The first DMA gateway, using its own home DMA register storing information about the devices is services, then directs the communication to the network and/or DMA server that services the targeted communications device.

When the DMA gateway receives DMA server information about one or more DMA services associated with the DMA gateway or information about other networks the DMA gateway services, the DMA gateway may provide the DMA server information to other DMA gateways in a number of ways. For example, the DMA gateway may send a notification to other DMA gateways that is has received the DMA server information and that the DMA server information can be retrieved from the DMA gateway or, as described below, from a central database. The DMA server information is then transmitted to other DMA gateways in response to queries from one or more gateways requesting the DMA server information. Alternatively, the DMA gateway may automatically send the DMA server information to other gateways upon receiving the DMA server information.

Instead of or in addition to sending the DMA server information to other DMA gateways, the DMA gateway may send the DMA server information to a central database as shown in FIG. **10**. Then, for example, when a DMAG gateway such as DMA gateway **1010** is in communications range of a DMA server such as DMA server **1012**, the DMA server information is sent to the central register database **1070**. The DMA server information is sent from the DMA gateway **1010** via the satellite communications network **1080** to the DMA gateway **1050** where the DMA server information is routed via the private IP network **1060** to the central register database. Thus, as DMA server networks and other networks are added to the system, the DMA gateway servicing each of these communications networks receives the communications information for the communications network and sends the communications information to the central register database **1070**. Then, other DMA gateways each can receive the new communications information from the central register database **1070**.

The new communications information may be automatically sent by the central register database **1070** via the DMA gateway **1050** that services the central register database. Alternatively, when new communications information is received, the DMA gateway receiving the communications information or the central register database **1070** may send a notification to other DMA gateways that the new information is available for retrieval.

FIG. **11** shows an operating environment **1100** including a plurality of networks serviced by a DMA gateway **1102**. The DMA gateway **1102** services networks through a plurality of interfaces configured to support different types of networks. The DMA gateway **1102** communicates with a private IP

network **1104**, such as that used to communicate with one or more DMA servers and/or a central register database as shown in FIG. **7**, via a data network interface **1106**. The DMA gateway **1102** communicates with the DMA gateway network, which in this example includes a satellite network **1108**, via a satellite network interface **1110**. In addition, the DMA gateway **1102** includes one or more interfaces that enable the DMA gateway **1102** to communicate with one or more legacy networks. For example, the DMA gateway **1102** communicates with a public switched telephone network (PSTN) or integrated services digital network (ISDN) **1112** via a PSTN/ISDN interface **1114**. The DMA gateway **1102** communicates with a public IP network **1116** via a public IP interface **1118** that enables the DMA gateway **1102** to, for example, exchange Internet data or voice over Internet protocol (VoIP) calls. The DMA gateway **1102** also communicates with a wireless network **1120** via a mobile device interface **1122**. The DMA gateway **1102** also communicates with an ANSI-41 network **1124** via an SS7 TCAP/SCCP interface **1126** operable to be used in ISUP signaling, DMA server identification, roamer registration, and other functions described with reference to the SS7GW interface **522** described with reference to FIG. **5**.

One or more processors **1130** is coupled with the interfaces **1106**, **1110**, **1114**, **1118**, and **1122** and a memory device **1140**. The memory device **1140** may include one or more of a random access memory, including volatile and nonvolatile rewritable memory devices, a read-only memory, and data storage devices. The memory device **1140** maintains a plurality of software modules providing executable instructions to the processor **1130** to support for the functions of the DMA gateway **1102**. The modules include one or more gateway modules **1142** that include the operating system and basic control software that enables the processor **1130** to interact with its network interfaces. One or more conversion modules **1144** control the translation of data and data formats used by one of the networks to that of one or more other networks to which data is to be communicated. One or more routing modules **1146** provide instructions to the processor for routing communications between the appropriate interfaces. The routing instructions use information about the accessibility of devices through various servers, gateways, and networks. Thus, as information about a communication is received, routing instructions are provided indicating through which DMA gateways the communication is to be directed from its source to its destination.

One or more legacy network communications modules provide instructions for the processor **1130** to interact with each of the legacy communications network interfaces **1114**, **1118**, **1122**. One or more DMA detection modules **1152** provide instructions to the processor for detecting the presence of accessible DMA servers and integrating the servers into the DMA network. One or more register data management modules **1154** receive, maintain, and/or forward register data for various networks and devices. The one or more register data management modules **1154** are operably coupled with a community location register (CLR)/visitor location register gateway (VLR)/gateway (GW)/global title (GT) (collectively, CVGG) data storage **1160** to maintain register data for DMA servers and other networks that communicate through the DMA gateway **1102**. The register data stored by embodiments according to the present disclosure are described below with reference to FIGS. **9** and **10**.

The DMA gateway **1102** may be implemented in a number of forms. For example, the DMA gateway **1102** may be implemented as an orbiting satellite, as described with reference to FIGS. **6** and **7**. Alternatively, the DMA gateway **1102** may include either a fixed or portable ground station. The DMA gateways **1102** communicate with each other through a gateway network. In the example of FIGS. **6** and **7**, the gateway network includes a satellite communications network. However, if the DMA gateways include only ground-based stations, the gateway network may include a point-to-point network facilitated by microwave communications, optical or other cabled connections, or other types of communications systems. If the gateway network includes both orbiting and ground-based stations, the gateway network may include a combination of satellite-based and non-satellite based communications systems.

FIGS. **12** and **13** show tables depicting how communications information including register data is stored in the DMA gateways or a central register database. The tables in FIGS. **12** and **13** are a logical representation. The entries within the tables do not represent a single value as might be found, for example, in a single entry of a spreadsheet document. Instead, the entries within the rows and columns of the table represent a category of information stored within the table.

In the example of FIGS. **12** and **13**, representative data is shown for three DMA gateways and three DMA servers, although data for any number of DMA gateways and DMA servers participating in a DMA network may be included in register data tables. In this example, it is assumed that each DMA gateway is in communication with a respective DMA server designated with the same number, e.g., DMA gateway **1** is in communication with DMA server **1**, etc. FIG. **12** shows tables **1200** and **1250** representing the register data stored in each of DMA gateway **1** and DMA gateway **2**, respectively, while FIG. **10** shows a table **1000** representing the register data stored in a central register database for the three DMA gateways.

In the table **1200** for the DMA gateway **1**, three rows **1210**, **1212**, and **1214** store register data for each of the respective DMA servers, DMA server **1**, DMA server **2**, and DMA server **3**. In a CLR database column **1220**, CLR data is stored for each of the three DMA servers and, in a VLR database column **1222**, VLR data is stored for each of the three DMA servers. In DMAG **2** Community HLR database column **1224** and DMAG **3** Community HLR database column **1226**, the HLR data for each of the DMA servers is stored for DMA gateway **2** and DMA gateway **3**, respectively. In a Visitor DMA Server Register column **1228**, data is stored for one or more DMA servers that are temporarily registered with DMA gateway **1**.

In the table **1250** for the DMA gateway **2**, three rows **1260**, **1262**, and **1264** store register data for each of the respective DMA servers, DMA server **1**, DMA server **2**, and DMA server **3**. In a CLR database column **1270**, CLR data is stored for each of the three DMA servers and, in a VLR database column **1272**, VLR data is stored for each of the three DMA servers. In DMAG **1** Community HLR database column **1274** and DMAG **3** Community HLR database column **1276**, the HLR data for each of the DMA servers is stored for DMA gateway **1** and DMA gateway **3**, respectively. In a Visitor DMA Server Register column **1278**, data for one or more DMA servers that are temporarily registered with DMA gateway **2**.

Referring to FIG. **13**, in the table **1300** for the central register database, three rows **1310**, **1312**, and **1314** store register data for each of the respective DMA servers, DMA server **1**, DMA server **2**, and DMA server **3**. In a DMA gateway **1** HLR database column **1320**, HLR data is stored for each of the three DMA servers. In a DMA gateway **1** VLR database column **1322**, VLR data is stored for each of the three DMA servers. In DMAG **1** Visitor DMA server register

column **1324**, data is stored for one or more DMA servers that are temporarily registered with DMA gateway **1**. In a DMA gateway **2** HLR database column **1326**, HLR data is stored for each of the three DMA servers. In a DMA gateway **2** VLR database column **1328**, VLR data is stored for each of the three DMA servers. In DMAG **2** Visitor DMA server register column **1330**, data is stored for one or more DMA servers that are temporarily registered with DMA gateway **2**.

FIG. **14** shows a flow diagram **1400** of an exemplary process for routing communications using DMA gateways. In the example of FIG. **14**, a first DMA server comes in communications range or otherwise becomes accessible to a first DMA gateway while a legacy communications network becomes accessible to a second DMA gateway.

At **1402**, information is received at a first DMA gateway indicating the location of register data for a DMA server. This register data may be stored in another DMA gateway or a central register database. At **1404**, information is received indicating that a second DMA gateway is in communication with a legacy communications network. At **1406**, it is detected that the first DMA server is now in communications range of the first DMA gateway. At **1408**, the first DMA gateway receives the DMAS register data for the first DMA server from the location identified at **1402**. As previously described, this information may be automatically transmitted to the first DMA gateway when it comes within communications range of the first DMA server or the first DMA gateway may request the information from the location where it is stored.

At **1410**, information is received that relates to a data and/or voice communication placed by a mobile device associated with the first DMA server. The information indicates that the communication is directed or placed to a target device accessible via the legacy communications network. The accessibility of the legacy communications network to the second DMA gateway was previously identified to the first DMA gateway at **1404**. Thus, at **1412**, the communication information is routed from the first DMA gateway to the second DMA gateway. The process ends at **1414**. The process repeats indefinitely as desired to relay communications using the DMA gateways.

FIG. **15** shows a flow diagram **1500** of an exemplary process for routing communications to a DMA gateway depending on whether the DMA gateway communicates with a server through a private IP network or through another medium. At **1502**, routing instructions are received at a DMA server from a DMA gateway when the DMA server is in communication with the DMAG, such as when the DMA gateway comes within communications range of the DMA server. At **1504**, a communication is received at the DMA server from a mobile communications device via a wireless transceiver coupled to the DMA server. At **1506**, it is determined whether the DMA server communicates with the DMA gateway via a private IP network. If so, at **1510**, packet data related to the communication is sent as packet data over the private IP network that is received by the DMA gateway via its private IP network interface. On the other hand, if it is determined at **1506** that the DMA server does not communicate with the DMA gateway via a private IP network, at **1512**, the information related to the communication is transmitted to the DMA gateway via another medium, such as a direct satellite uplink. The information related to the communication is thus received by the DMA gateway via a satellite communications network interface.

At **1514**, the communication is routed from the DMA gateway to the destination device. The communication is routed using information received and maintained by the DMA gateway as described, for example, in FIG. **14**. The process ends at **1516**. The process repeats indefinitely as desired to relay communications using the DMA gateways.

The above-disclosed subject matter is to be considered illustrative, and not restrictive, and the appended claims are intended to cover all such modifications, enhancements, and other embodiments, which fall within the scope of the disclosure. Thus, to the maximum extent allowed by law, the scope of the disclosure is to be determined by the broadest permissible interpretation of the following claims and their equivalents, and shall not be restricted or limited by the foregoing detailed description.

What is claimed is:

1. A non-transitory computer-readable storage medium comprising instructions that, when executed by a processor, cause the processor to:

receive, at a first distributed mobile architecture (DMA) gateway of a DMA gateway communications network, communications information associated with a communications network that is accessible by a second DMA gateway of the DMA gateway communications network;

store the communications information at a memory of the first DMA gateway;

receive a communication associated with a destination device that is indicated by the communications information to be served by the second DMA gateway; and

route the communication to the destination device by relaying the communication from the first DMA gateway to the second DMA gateway via the DMA gateway communications network.

2. The non-transitory computer-readable storage medium of claim **1**, wherein at least one of the first DMA gateway and the second DMA gateway includes a satellite-based DMA gateway, and wherein the DMA gateway communications network includes a satellite communications network.

3. The non-transitory computer-readable storage medium of claim **1**, wherein the communications information is stored in a home location register, and wherein the communications information indicates one or more devices that are accessible by a DMA server.

4. The non-transitory computer-readable storage medium of claim **3**, wherein the DMA server includes one of a ground-based DMA server and a satellite-based DMA server.

5. The non-transitory computer-readable storage medium of claim **1**, wherein the communications information indicates one or more devices that are accessible by a legacy communications network.

6. The non-transitory computer-readable storage medium of claim **5**, wherein the legacy communications network includes one of a public switched telephone network (PSTN), a wireless communication network serviced by a mobile switching center (MSC), a public internet protocol (IP) network, and an American National Standards Institute 41 (ANSI-41) network.

7. The non-transitory computer-readable storage medium of claim **1**, further comprising instructions that, when executed by the processor, cause the processor to send a notification from the first DMA gateway to the second DMA gateway, wherein the notification indicates that the communications information is stored at the first DMA gateway.

8. The non-transitory computer-readable storage medium of claim **1**, further comprising instructions that, when executed by the processor, cause the processor to automatically send at least a portion of the communications information from the first DMA gateway to the second DMA gateway

via the DMA gateway communications network in response to the first DMA gateway receiving the communications information.

9. The non-transitory computer-readable storage medium of claim **1**, further comprising instructions that, when executed by the processor, cause the processor to send at least a portion of the communications information from the first DMA gateway to the second DMA gateway via the DMA gateway communications network in response to the first DMA gateway receiving a query from the second DMA gateway for the communications information.

10. The non-transitory computer-readable storage medium of claim **1**, further comprising instructions that, when executed by the processor, cause the processor to determine that the communications network that is accessible by the second DMA gateway is within a communications range of the first DMA gateway.

11. The non-transitory computer-readable storage medium of claim **10**, further comprising instructions that, when executed by the processor, cause the processor to send communications network information from the first DMA gateway to the second DMA gateway, wherein the communications network information indicates that the communications network that is accessible by the second DMA gateway is within the communications range of the first DMA gateway.

12. The non-transitory computer-readable storage medium of claim **10**, further comprising instructions that, when executed by the processor, cause the processor to send communications network information from the first DMA gateway to a central database, wherein the communications network information indicates that the communications network that is accessible by the second DMA gateway is within the communications range of the first DMA gateway.

13. The non-transitory computer-readable storage medium of claim **10**, further comprising instructions that, when executed by the processor, cause the processor to receive additional communications network information from the second DMA gateway in response to the second DMA gateway determining that an additional communications network is within a second communications range of the second DMA gateway.

14. The non-transitory computer-readable storage medium of claim **12**, further comprising instructions that, when executed by the processor, cause the processor to receive a second notification from the central database, the second notification indicating that second register data is stored at the central database.

15. The non-transitory computer-readable storage medium of claim **14**, further comprising instructions that, when executed by the processor, cause the processor to determine that a second communications network is within a service area of the first DMA gateway.

16. The non-transitory computer-readable storage medium of claim **15**, wherein the first DMA gateway determines that a private Internet Protocol (IP) network access point is within a communications range of the first DMA gateway, and wherein the first DMA gateway is adapted to communicate with the second communications network via the private IP network.

17. The non-transitory computer-readable storage medium of claim **1**, wherein the first DMA gateway receives the communications information from one of the second DMA gateway and a central database.

18. A non-transitory computer-readable storage medium comprising instructions that, when executed by a processor, cause the processor to:

receive, at a first distributed mobile architecture (DMA) server, first routing instructions from a first DMA gateway when the first DMA server is in a first service area of the first DMA gateway, wherein the first DMA gateway comprises a first orbiting satellite; and

send a first call to the first DMA gateway via a private Internet Protocol (IP) network according to the first routing instructions, wherein the first call is received at the first DMA server from a first mobile communication device via a wireless transceiver integrated with the first DMA server,

wherein the first call is placed to a destination device that is accessible via a legacy communications network, wherein the legacy communications network is accessible via the first DMA gateway.

19. The non-transitory computer-readable storage medium of claim **18**, wherein the first DMA server is adapted to send the first call while being transported from a first location to a second location.

20. The non-transitory computer-readable storage medium of claim **19**, further comprising instructions that, when executed by the processor, cause the processor to receive second routing instructions from a second DMA gateway in response to the first DMA server moving into a second service area of the second DMA gateway, wherein the second service area includes the second location, and wherein the second DMA gateway comprises a second orbiting satellite.

21. The non-transitory computer-readable storage medium of claim **20**, further comprising instructions that, when executed by the processor, cause the processor to send a second call received at the first DMA server from the first mobile communication device to the second DMA gateway via the private IP network according to the second routing instructions.

22. The non-transitory computer-readable storage medium of claim **21**, wherein the second call is associated with a second destination device that is accessible via the legacy communications network.

23. The non-transitory computer-readable storage medium of claim **21**, wherein the second call is associated with a second mobile communication device that is accessible via a second DMA server, wherein the second DMA server is accessible to the second DMA gateway via the private IP network.

24. The non-transitory computer-readable storage medium of claim **20**, wherein the first DMA server receives the second routing instructions from the second DMA gateway during the first call.

25. The non-transitory computer-readable storage medium of claim **20**, further comprising instructions that, when executed by the processor, cause the processor to send first DMA server register data from the first DMA server to the second DMA gateway in response to receiving the second routing instructions from the second DMA gateway.

* * * * *