Trials@uspto.gov
571.272.7822

Paper 31
Entered: September 10, 2024

UNITED STATES PATENT AND TRADEMARK OFFICE

BEFORE THE PATENT TRIAL AND APPEAL BOARD

MICROSOFT CORPORATION and AFFIRMED NETWORKS, INC.,
Petitioner,

v.

LEMKO CORPORATION,
Patent Owner.

IPR2023-00531
Patent 7,855,988 B2

Before FRANCES L. IPPOLITO, BRIAN D. RANGE, and
SCOTT RAEVSKY, *Administrative Patent Judges*.

RAEVSKY, *Administrative Patent Judge*.

JUDGMENT
Final Written Decision
Determining All Challenged Claims Unpatentable
35 U.S.C. § 318(a)

I. INTRODUCTION

A. Background

Microsoft Corporation and Affirmed Networks, Inc. (collectively, "Petitioner") filed a Petition (Paper 3, "Pet.") requesting *inter partes* review of claims 1, 3–9, and 20 of U.S. Patent No. 7,855,988 B2 (Ex. 1001, "the '988 patent"). Lemko Corporation ("Patent Owner") filed a Preliminary Response (Paper 7, "Prelim. Resp."). Based on the information presented in the Petition, we instituted an *inter partes* review of claims 1, 3–9, and 20 (Paper 8). Subsequent filings include a Patent Owner Response (Paper 15, "PO Resp."), a Petitioner Reply (Paper 21, "Reply"), and a Patent Owner Sur-reply (Paper 22, "Sur-reply"). We held an oral hearing on July 11, 2024, a transcript of which has been entered into the record (Paper 30, "Tr.").

We have jurisdiction over this proceeding under 35 U.S.C. § 6(b). After considering the evidence and arguments of the parties, we determine that Petitioner has proven by a preponderance of the evidence that claims 1, 3–9, and 20 are unpatentable.

B. Related Proceeding

Petitioner indicates, and Patent Owner agrees, that the '988 patent is asserted in *Lemko Corporation v. Microsoft Corporation*, No. 3:22-cv-00363 (N.D. Tex.). Pet. 26; Paper 4, 1.

C. The '988 Patent (Ex. 1001)

1. *Disclosure*

The '988 patent, titled "System, Method, and Device for Routing Calls Using a Distributed Mobile Architecture," relates to "routing

communications between distributed mobile architecture (DMA) servers using DMA gateways." Ex. 1001, code (54), 2:64–66.

The '988 patent explains that "[c]urrent telephone systems are expensive to deploy," for example, where "a typical cellular system that includes a mobile switching center (MSC), a base station controller (BSC), and a home location register/visitor location register (HLR/VLR) can cost over $2.0 million" and "may require a minimum of ten thousand users in order to be economically viable." Ex. 1001, 1:37–44. The '988 patent recognizes that "[i]n many rural areas, the population is not large enough to support the installation of such a system." *Id*. at 1:44–45.

Accordingly, the '988 patent proposes a distributed and associative telecommunications system with the controlling logic distributed and decentralized. Ex. 1001, 6:63–65. An exemplary system is depicted in Figure 4, and is reproduced below.

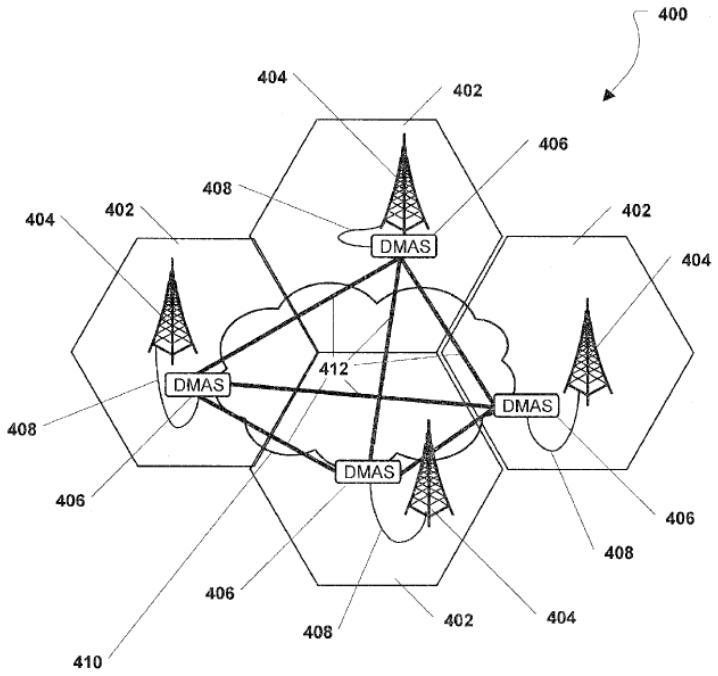

FIG. 4

Figure 4 of the ’988 patent shows a non-limiting, exemplary embodiment of a distributed and associated telecommunications system 400. *Id.* at 6:31–33. As shown in Figure 4, system 400 includes multiple coverage sites 402, each having an antenna 404 that “is connected to a transceiver belonging to a base transceiver station (BTS).” *Id.* at 6:33–37. Each antenna 404 can also be connected to a DMA server 406 that “is physically and directly connected to its respective antenna 404.” *Id.* at 6:38–42. The DMA servers can be connected to each other via Internet Protocol network 410 such that “there exists a peer-to-peer connection 412 between each DMA server 406 in the system 400.” *Id.* at 6:46–49.

However, “in not all cases will the DMA servers 406 be able to participate as peers in an IP network 410.” Ex. 1001, 9:12–14. Namely, “if one or more of the coverage sites 402 are in rural locations or other locations

remote from other coverage sites 402, there may not be access to the IP network 410 in the remote coverage sites 402." *Id.* at 9:14–17. In such cases, DMA gateways enable DMA servers to communicate with each other and enable devices in legacy networks to communicate with devices serviced by DMA servers. *Id.* at 9:17–24, Fig. 6.

2. *Claims 1, 3–9, and 20*

Claim 1 is illustrative of the challenged claims:

1. [Preamble] A method, comprising:

> [1b] receiving at a first distributed mobile architecture (DMA) gateway communications information for a communications network accessible by a second DMA gateway, the communications information indicating one or more devices accessible by one of a DMA server and a legacy communications network, wherein the first DMA gateway and the second DMA gateway participate in a DMA gateway communications network;
>
> [1c] storing the communications information in a home DMA register of the first DMA gateway;
>
> [1d] receiving a communication at the first DMA gateway for a target device indicated by the communications information to be served by the second DMA gateway; and
>
> [1e] routing the communication from the first DMA gateway to the target device by relaying the communication from the first DMA gateway to the second DMA gateway via the DMA gateway communications network.

Ex. 1001, 19:30–47.

D. Asserted Challenge

Petitioner contends that claims 1, 3–9, and 20 of the '988 patent are unpatentable under the following challenge (Pet. 2):

Claims Challenged	35 U.S.C. §	References/Basis
1, 3–9, 20	§ 102[1]	Flore[2]

Petitioner also relies on the Declaration of James Proctor (Ex. 1003). Patent Owner relies on the Declaration of Todor Cooklev, Ph.D. (Ex. 2021).

II. ANALYSIS

A. Principles of Law

Petitioner bears the burden to demonstrate unpatentability, and that burden never shifts to Patent Owner. *Dynamic Drinkware, LLC v. Nat'l Graphics, Inc.*, 800 F.3d 1375, 1378 (Fed. Cir. 2015).

To show anticipation under 35 U.S.C. § 102, each and every claim element, arranged as in the claim, must be found in a single prior art reference. *Net MoneyIN, Inc. v. VeriSign, Inc.*, 545 F.3d 1359 (Fed. Cir. 2008). The prior art need not, however, use the same words as the claims. *In re Gleave*, 560 F.3d 1331, 1334 (Fed. Cir. 2009). The anticipation inquiry takes into account the literal teachings of the prior art reference and inferences the ordinarily skilled person would draw from it. *Eli Lilly and Co. v. Los Angeles Biomedical Res. Inst. at Harbor-UCLA Med. Ctr.*, 849 F.3d 1073, 1074–75 (Fed. Cir. 2017).

---

[1] The Leahy-Smith America Invents Act, Pub. L. No. 112-29, 125 Stat. 284 (2011) ("AIA"), amended 35 U.S.C. § 102. Because the challenged claims of the '988 patent have an effective filing date before the effective date of the applicable AIA amendment, we refer to the pre-AIA version of 35 U.S.C. § 102 throughout this Decision.

[2] U.S. Publication No. 2007/0021120 A1 to Flore, published Jan. 25, 2007 (Ex. 1005).

B. Level of Ordinary Skill in the Art

Petitioner defines the person of ordinary skill in the art as follows: "As of 2008, a person of ordinary skill in the art [POSA or POSITA] . . . of the '988 patent's field would have had a bachelor's degree in electrical engineering, computer engineering or an equivalent, as well as two years of industry experience related to telecommunications networks." Pet. 3 (citing Ex. 1003 ¶ 56). Petitioner also asserts that "[a]dditional graduate education . . . could substitute for professional experience, or significant experience in the field could substitute for formal education." *Id.*

Patent Owner "applies this definition of a POSITA for its analysis." PO Resp. 18.

Based on the complete record now before us, we adopt Petitioner's undisputed proposal as reasonable and consistent with the prior art and the '988 patent. *See Okajima v. Bourdeau*, 261 F.3d 1350, 1355 (Fed. Cir. 2001) (the prior art may reflect an appropriate level of skill in the art).

C. Claim Construction

In *inter partes* review, we construe a claim using the same claim construction standard that would be used to construe the claim in a civil action under 35 U.S.C. § 282(b), including construing the claim in accordance with the ordinary and customary meaning of such claim as understood by one of ordinary skill in the art and the prosecution history pertaining to the patent. 37 C.F.R. § 42.100(b).

The Petition does not propose any constructions. Post-institution, the parties address the meaning of the following claim term.

1. *"distributed mobile architecture (DMA)"*

Patent Owner asserts that distributed mobile architecture (DMA) should be construed as:

> (1) a network architecture where DMA servers have distributed call-routing functionality and (2) are connected with other DMA servers through peer-to-peer connections (*i.e.* without connecting through a hierarchical, network-hub architecture), and (3) that is not a legacy communications network.

PO Resp. 18. We address the first two parts of this proposed construction in the next section and the third part in the following section.

a. *(1) a network architecture where DMA servers have distributed call-routing functionality and (2) are connected with other DMA servers through peer-to-peer connections (i.e. without connecting through a hierarchical, network-hub architecture)*

Patent Owner asserts that DMA should be construed "consistent with the plain meaning of its words and the inventor's description." PO Resp. 18. According to Patent Owner, this requires "a mobile architecture with distributed functionality and organization, instead of centralized functionality and hierarchal organization." *Id.*

Regarding "call-routing functionality," Patent Owner asserts that the '988 patent specification consistently uses the term DMA to refer to "a mobile communications architecture where routing functionality, and the information necessary to route calls, is distributed among DMA servers of a DMA network." *Id.* at 19–20 (citing Ex. 2021 ¶¶ 61–62; Ex. 1001, 6:63–65, code (57), 4:1–19, 9:36–11:27, Figs. 1, 5, 6:46–6:62). In addition, Patent Owner asserts, the DMA network must be "self-healing and redundant" as described in the specification. *Id.* at 20 (citing Ex. 1001, 6:65–7:12; Ex. 2021 ¶ 63). Patent Owner further asserts that Petitioner's expert agreed that

"distributed" requires call routing functionality to be distributed among the DMA systems. *Id.* at 21 (citing Ex. 2026, 74:3–22 (testifying that "distributed" means that "[t]here needs to be functionality distributed"), 71:19–72:4).

As for "peer-to-peer connections," Patent Owner reasons that because the DMA is decentralized with call routing functionality, each DMA server has peer-to-peer connections with other DMA servers. *Id.* (citing Ex. 1001, 6:46–49; Ex. 2021 ¶ 66). Patent Owner further relies on Figure 4 and its description of "***peer-to-peer connection*** 412 between each DMA server," such that "the DMA servers can communicate without an intervening MSC." *Id.* at 22–23 (citing Ex. 1001, 6:46–49; Ex. 2021 ¶ 67). Patent Owner also disagrees with the Institution Decision's preliminary finding that no peer-to-peer DMA connections are required because the '988 patent states that "in not all cases will the DMA servers 406 be able to participate as peers in an IP network 410." *Id.* at 23 (citing Dec. 13; Ex. 1001, 6:31–33, 9:12–14). Patent Owner emphasizes that when "DMA servers are able to connect as peers with an existing DMA network, they do so" and that the new DMA server is just the initial node for a new peer-to-peer network. *Id.* at 23–24 (citing Ex. 1001, 9:9–24, Fig. 6; Ex. 2021 ¶ 69).

Petitioner disagrees, contending that DMA should be accorded its plain meaning and that no special definition or disclaimer dictates a different result. Reply 1. Relying on its expert, Petitioner describes the plain meaning of "distributed" as "something that is part of a broader network or intended to be part of a broader network." *Id.* at 2 (citing Ex. 2027, 13:22–14:10).

Petitioner further argues that the plain claim language does not support Patent Owner's construction because no challenged claim "is directed to the distributed mobile architecture ***itself***" or even a "DMA system." *Id.* Petitioner also takes exception with Patent Owner's proposal to "import its lengthy construction for [DMA] . . . into ***every*** instance where it is used as a prefix or qualifier for specific components." *Id.* at 2–3. Further, Petitioner adds, none of the claims "requires that any action or method step be performed by a DMA server, much less requires multiple DMA servers connected through peer-to-peer connections." *Id.* at 3. Petitioner also asserts that "the claim language places no constraint on the connections between DMA servers or on call-routing functionality of DMA servers." *Id.* at 4.

As for the specification, Petitioner views Patent Owner's proposal as improperly importing embodiments into the claims. *Id.* at 5. Petitioner contends that Patent Owner relies on specification passages that describe "exemplary" and "permissive," rather than definitional, language. *Id.* at 5–6 (citing PO Resp. 19–22, 25 (relying on, e.g., Ex. 1001, Figure 4); Ex. 1001, 6:31–32 ("***FIG. 4 illustrates a non-limiting, exemplary embodiment*** . . . ."), 6:52–53 ("***For example***, the DMA servers 406 ***can*** switch and route calls . . . .")).

We agree with Petitioner that Patent Owner's "call routing" and "peer-to-peer" constructions are incorrect. Patent Owner does not persuasively argue why the claim should be rewritten to require "distributed call routing functionality" or "peer-to-peer connections," let alone read these functions into every instance where "DMA" is used as a prefix or qualifier for other terms (such as DMA gateway, DMA server, and DMA gateway

communications network). Patent Owner merely cites several passages of the specification and asserts that the claim should read as it says. PO Resp. 19–21. With no explanation as to why the specification should limit the claims, Patent Owner's argument has no persuasive legal basis.

Our reviewing court "has repeatedly cautioned against limiting the claimed invention to preferred embodiments or specific examples in the specification." *Williamson v. Citrix Online, LLC*, 792 F.3d 1339, 1346–47 (Fed. Cir. 2015). "Absent disclaimer or lexicography, the plain meaning of the claim controls." *Toshiba Corp. v. Imation Corp.*, 681 F.3d 1358, 1369 (Fed. Cir. 2012).

There is no disclaimer or lexicography in the specification that requires us to limit the claims as Patent Owner wishes. We agree with Petitioner that the passages upon which Patent Owner relies use non-limiting, exemplary language. *See* Reply 6. For example, Patent Owner relies heavily on Figure 4 and its accompanying description, but Figure 4 "illustrates a non-limiting, exemplary embodiment." PO Resp. 19–25; Ex. 1001, 6:31. Thus, Figure 4's references to a "peer-to-peer connection," "switch and route call[]" functionality, that "controlling logic *can* be distributed," and "self-healing and redundant" wireless coverage, for example, do not limit the claim. *See* Ex. 1001, 6:48, 52, 64, 66 (emphasis added).

Patent Owner also does not persuasively explain why we should disregard the '988 patent's exception to peer-to-peer connections, that is, "in not all cases will the DMA servers 406 be able to participate as peers in an IP network." *Id.* at 9:12–13. Patent Owner's assertions that when "DMA servers are able to connect as peers with an existing DMA network, they do

so," and that the "new DMA server is just the initial node in a new peer-to-peer network," do not find support in the specification. *See* PO Resp. 23–24 (citing Ex. 1001, 9:9–24, Fig. 6). Instead, Patent Owner cites a portion of the specification that explains "in not all cases will the DMA servers 406 be able to participate as peers," such as in rural areas, in which case "DMA gateways . . . enable DMA servers to communicate with one another when one or more of the DMA serves cannot participate directly in the IP network." Ex. 1001, 9:12–21. Nothing in this passage suggests that a DMA server not acting as a peer would merely be a temporary condition and that once able to connect as a peer, it would do so. Such reasoning is gloss added by Patent Owner and Patent Owner's expert, Dr. Cooklev, whose testimony on this point mirrors the Response. Ex. 2021 ¶ 69. We do not find Dr. Cooklev's testimony credible on this point because the testimony does not align with the '988 patent specification.

The Sur-reply changes tack, arguing that DMA has no plain and ordinary meaning in the art, so we should construe it "only as broadly as provided for by the patent itself." Sur-reply 10–12 (citing *Irdeto Access, Inc. v. Echostar Satellite Corp.*, 383 F.3d 1295, 1300 (Fed. Cir. 2004); *Vehicle IP, LLC v. Cellco P'ship*, 757 F. App'x 954, 958 (Fed. Cir. 2019)). Patent Owner further asserts that "it is undisputed" that DMA "lacks an established meaning." *Id.* at 12. This assertion appears to mischaracterize the Reply because Petitioner actually argues that "the term should be accorded . . . its plain and ordinary meaning of each of its individual terms." Reply 1. And Patent Owner *itself* asserts in the Response that DMA should be construed "consistent with the *plain meaning of its words* and the inventor's description." PO Resp. 18 (emphasis added). Patent Owner's

positions that DMA has its "plain meaning" but that the term "does not have a plain and ordinary meaning" are irreconcilable. *Compare id.*, *with* Sur-reply 12. To the extent Patent Owner abandons its earlier "plain meaning" argument in favor of a new one, the Sur-reply's argument is untimely and not responsive to the Reply, and we do not consider it. *See* 37 C.F.R. § 42.23(b) ("A sur-reply may only respond to arguments raised in the corresponding reply . . . ."). Moreover, even if DMA lacks "plain and ordinary meaning," the specification does not support Patent Owner's proposed construction for the reasons we explain herein.

Finally, we disagree with Patent Owner that Petitioner's expert, Mr. Porter, conceded that "distributed" requires call routing functionality be distributed among the DMA systems. PO Resp. 21 (citing Ex. 2026, 74:3–22). The primary testimony Patent Owner relies on from Mr. Porter is his assertion that "distributed" means that "[t]here needs to be functionality distributed." *Id.* (citing Ex. 2026, 71:19–72:4). From Mr. Porter's statement that "functionality" is distributed, it does not follow that the claim requires "*call routing* functionality" to be distributed. Yet even if Mr. Porter's testimony somehow implies that call routing functionality must be distributed in the claims, this would contradict the permissive, non-limiting language of the specification. We may not rely on "expert testimony that contradict[s] the intrinsic evidence" to interpret claims. *AFG Indus., Inc. v. Cardinal IG Co., Inc.*, 239 F.3d 1239, 1249 (Fed. Cir. 2001).

We need not assign further meaning to the term "DMA" because determining that Patent Owner's construction is incorrect sufficiently decides the issues before us. We agree with Petitioner that DMA "should be

accorded . . . its plain and ordinary meaning of each of its individual terms." Reply 1.[3]

b. (3) that is not a legacy communications network

Finally, we address Patent Owner's contention that DMA "is not a legacy communications network." PO Resp. 18. Patent Owner asserts that the '988 patent distinguishes DMA from "a host of different" legacy systems, including public switched telephone network (PSTN) services, Voice over Internet Protocol (VoIP) systems, and wireless networks serviced by a mobile switching center (MSC). *Id.* at 25–26 (citing, e.g., Ex. 1001, 1:37–64, claim 5), 27–28 (citing Figure 6). "What all of these legacy

---

[3] During the hearing, Patent Owner asserted that a dictionary definition in Exhibit 3002 is relevant here. Tr. 60:25–61:9; *see* Paper 27, 3 (Board's hearing order proposing that the parties discuss the definitions of "distributed architecture" and "distributed processing" in Exhibit 3002). That definition is for the phrase "distributed computer network," which is defined as "a network in which all node pairs are connected, either directly or through redundant paths through intermediate nodes. *See also* decentralized computer network." Tr. 61:6–9 (quoting Ex. 3002); *see also id.* at 62:3–14 (discussing definition of "distributed system" in Exhibit 3003). Patent Owner argues, "I think that's important to understand is that if you're talking about a distributed system, it's a decentralized system." *Id.* at 61:10–11. We find this argument and evidence unavailing because the claims do not recite a "distributed computer network," "decentralized system," or "distributed system." Regardless, as we discuss in the next section, Figure 6 depicts DMA gateways and DMA servers in a hierarchical, centralized relationship, which undermines Patent Owner's argument that DMA must mean decentralized in the context of the '988 patent. And elsewhere, the specification uses only permissive language to refer to decentralization and refers to "distributed and decentralized" separately, suggesting these terms have different meanings. *See also* Ex. 1001, 6:63–65 ("Within the distributed and associative telecommunications system 400 the controlling logic *can* be distributed and decentralized." (emphasis added)).

networks have in common," Patent Owner argues, "is that they are not private peer-to-peer networks, like the DMA networks of the '988 [p]atent." *Id.* at 26 (citing Ex. 2021 ¶ 74).

Patent Owner also argues that the claims distinguish "(DMA) networks from these legacy communications networks." *Id.* at 26. Claim 1, for instance, recites "one or more devices accessible by ***one of*** a DMA server and a legacy communications network." *Id.* "Because the '988 [p]atent recites both 'DMA' and 'legacy communications network' in the claims," Patent Owner argues, "the use of these two terms requires that they connote different meanings." *Id.* Patent Owner further relies on Figure 6 of the specification, which shows a "'DMA' infrastructure . . . separated from the legacy communications network." *Id.* at 27. And Patent Owner notes that claim 5 further separates DMA networks and legacy communications networks by specifying example legacy networks like a PSTN and MSC. *Id.* at 28.

Petitioner views Patent Owner's construction as an unsupported negative limitation. Reply 11. Petitioner takes particular issue with Patent Owner's reference to "DMA network," which does not appear in the claims. *Id.* at 11–13. Along those lines, Petitioner cites to our Institution Decision, where we preliminarily found that the phrases "DMA infrastructure" and "DMA network" do not appear in the claim and also remarked, "[n]or is it clear what these phrases are referring to." *Id.* at 11 (citing Dec. 11).

We start our analysis with the claim language. Claim 1 recites "the communications information indicating one or more devices accessible by one of a DMA server and a legacy communications network." As a preliminary matter, we agree with Petitioner that claim 1 does not

distinguish a "DMA network" from a "legacy communications network." Reply 11–13; PO Resp. 26. The phrase "DMA network" does not appear in the claims. Rather, claim 1 refers to "one of a DMA *server* and a legacy communications network." (Emphasis added.)[4]

Our reviewing court instructs that "there is a 'presumption' that separately listed claim limitations may indicate separate and distinct physical structure, but that presumption may always be rebutted in the context of a particular patent." *Google LLC v. EcoFactor, Inc.*, 92 F.4th 1049, 1058 (Fed. Cir. 2024). In *EcoFactor*, the claim language and specification rebutted any presumption that five inputs listed in a certain limitation were distinct components. *Id.* That was so because the claim language placed no constraint on how to use those inputs. *Id.* The specification also contained no restrictive language requiring the claim inputs to be separate. *Id.* To the contrary, the court found, "the specification contemplates an embodiment in which one claimed input is calculated based on at least one other claimed input." *Id.*

In the '988 patent, claim 1 does not specify how a DMA server may differ from a legacy communications network. As in *EcoFactor*, then, claim 1 places no constraint requiring different structure or functionality between

---

[4] Patent Owner asserts that Dr. Cooklev testified that DMA is a network, but this is unavailing because the claim also does not distinguish "DMA" on its own from a legacy network. *See* Sur-reply 21–22 (citing Ex. 1014, 57:2–6). Patent Owner further asserts that whether the challenged claims recite a DMA network "is irrelevant" because the claims recite DMA gateways, DMA servers, and a DMA gateway communications network. *See id.* at 21–22. This assertion overlooks that claim 1 recites none of those things in conjunction with a legacy communications network, only a "DMA server."

the DMA server and the legacy communications network. The specification also rebuts any presumption that these terms must be different components. For example, the specification explains that the DMA server may perform functions of a legacy communications network, such as MSC and BSC functions. *See* Ex. 1001, 7:32–34. For example, Figure 5 below depicts a DMA server (with our red oval annotation) showing this MSC and BSC functionality:

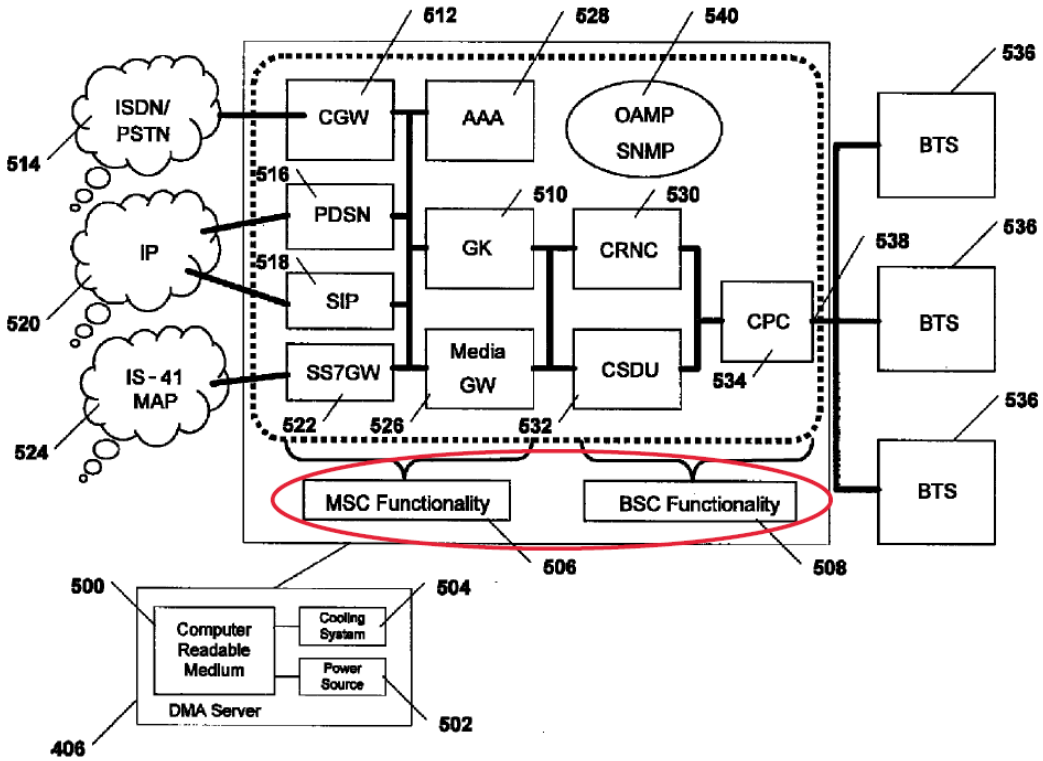

FIG. 5

The specification explains, "[a]s depicted in FIG. 5, the DMA server 406 may include a mobile switching center (MSC) module 506 and a base station controller (BSC) module 508." *Id.* Various of the depicted components can also "perform one or more of the functions of *legacy* Base Station Controllers (BSC)." *Id.* at 8:51–53 (emphasis added).

To be sure, the background section of the ’988 patent refers to disadvantages of “[c]urrent telephone systems,” such as the expense of an MSC or BSC and the difficulty of expansion or operating with existing telephone systems. Ex. 1001, 1:37–65. Yet although “disadvantages identified by the specification . . . [may] amount to implied disclaimer,” Figure 5 above melds the functionality of a DMA server and a legacy communications network (e.g., MSC, BSC) together. *See SightSound Techs, LLC v. Apple Inc.*, 809 F.3d 1307, 1317 (Fed. Cir. 2015). The specification therefore does not draw a bright line distinction between legacy communications network functionality and a DMA server.

Figure 6 (reproduced below) also shows DMA servers and DMA gateways communicating in a centralized, hierarchical relationship, which is another characteristic of legacy networks Patent Owner asserts that the “DMA” concept distinguishes. *See* PO Resp. 18 (arguing that DMA does not employ “centralized functionality and hierarchical organization”).

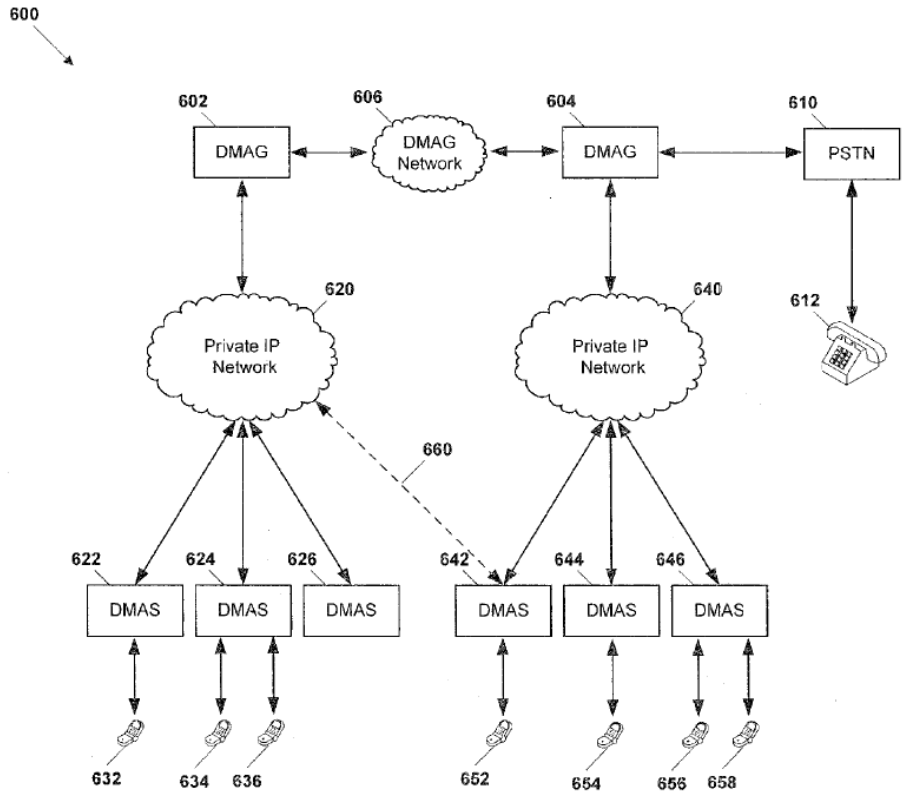

FIG. 6

That is, in Figure 6 above, DMA servers communicate with DMA gateways, which are hierarchically positioned above the DMA servers.

Accordingly, the intrinsic evidence does not require "distributed mobile architecture (DMA)" or "DMA server" to exclude a legacy communications network.

Regardless, even if we had determined that DMA (or "DMA server") does exclude a legacy communication network, DMA would not have the implied meaning Patent Owner ascribes to it. Patent Owner asserts that because DMA must exclude a legacy communications network, DMA must be a peer-to-peer network because legacy networks are not peer-to-peer networks. *See* PO Resp. 26. For reasons we explain above, this is

unpersuasive because the specification is not limited to peer-to-peer connections between DMA servers. And critically, Patent Owner's assertion that what "legacy networks have in common is that they are not private peer-to-peer networks" improperly reads an unsupported negative limitation into the claim. *See id.* (citing Ex. 2021 ¶ 74). Patent Owner's argument is illogical, which can be seen by following this argument to its ultimate conclusion—that anything that legacy networks are not, must be encompassed by the term DMA. Yet legacy networks are different from many things. For example, legacy networks are not airplanes. Just because legacy networks are not airplanes does not logically impel a conclusion that DMA must encompass airplanes. In the same way, just because legacy networks might not be peer-to-peer networks does not imply that DMA encompasses peer-to-peer networks.

Not only is Patent Owner's proposed negative limitation illogical, but it is also unsupported because the '988 patent does not disclose that all legacy networks are not peer-to-peer networks. In fact, Patent Owner does not supply a single citation to the '988 patent that refers to any legacy network not being a peer-to-peer network. *See* PO Resp. 26; Ex. 2021 ¶ 74. Instead, Patent Owner cites Dr. Cooklev's declaration, which merely testifies, without citation to the '988 patent, that "[w]hat all of these legacy networks have in common is that they are not private peer-to-peer networks, like the DMA networks of the '988 Patent." This unsupported testimony is unpersuasive. *See* 37 C.F.R. § 42.65(a) ("Expert testimony that does not disclose the underlying facts or data on which the opinion is based is entitled to little or no weight.").

Thus, even if we were to adopt a construction that "DMA server" excludes a legacy communications network, Patent Owner's additional "peer-to-peer" interpretation would be unpersuasive.

2. *Remaining terms*

We find it unnecessary to construe any further claim terms. *See Realtime Data, LLC v. Iancu*, 912 F.3d 1368 (Fed. Cir. 2019) ("The Board is required to construe 'only those terms . . . that are in controversy, and only to the extent necessary to resolve the controversy.'" (quoting *Vivid Techs., Inc. v. Am. Sci. & Eng'g, Inc.*, 200 F.3d 795, 803 (Fed. Cir. 1999))).

D. Asserted Anticipation by Flore

Petitioner contends that claims 1, 3–9, and 20 are anticipated by Flore. Pet. 11–25.

1. *Overview of Flore*

Flore relates "to techniques for performing handover between wireless communication networks using different radio access technologies." Ex. 1005 ¶ 3. In particular, Flore observes the desirability "for a wireless user to be able to roam seamlessly between [a] new wireless network and existing wireless networks" in order "to enjoy the performance advantages of the new wireless network and the coverage benefits of the existing wireless networks." *Id.* ¶ 7. Accordingly, Flore describes "[t]echniques for performing inter-system handover of a user equipment (UE) from a first radio access network (RAN) to a second RAN," where "[t]he second RAN may be a Universal Terrestrial Radio Access Network (UTRAN), and the first RAN may be an Evolved UTRAN (E-UTRAN), or vice versa." *Id.* ¶ 8.

Figure 1 of Flore depicts an exemplary deployment with a UTRAN and E-UTRAN, and is reproduced below.

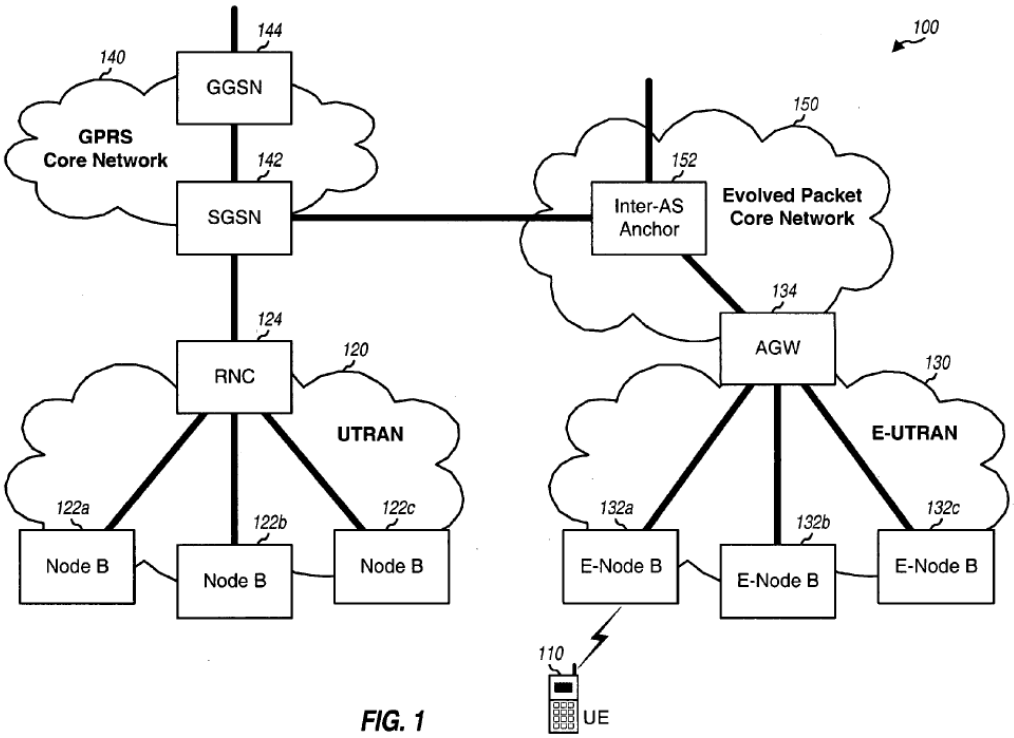

FIG. 1

Figure 1 of Flore is an exemplary deployment 100 with a UTRAN and E-UTRAN. Ex. 1005 ¶ 13. As shown in Figure 1, deployment 100 includes UTRAN 120 with Node Bs coupled to radio network controllers (RNC) 124, and E-UTRAN 130 with Evolved Node Bs coupled to Access Gateway (AGW) 134. Ex. 1005 ¶¶ 26, 27. General Packet Radio Service (GPRS) core network 140 includes a Serving GPRS Support Node (SGSN) 142, which "interfaces with RNC 124 in UTRAN 120 and supports packet-switched services for the UEs communicating with the UTRAN." *Id.* ¶ 28. Evolved Packet Core network 150 includes an Inter-Access System Anchor 152, which interfaces with AGW 134 in E-UTRAN 130 as well as SGSN 142 in GPRS core network 140. *Id.* ¶ 29. "Inter-AS Anchor 152 provides interoperability between E-UTRAN 130 and UTRAN 120 and GPRS core

network 140." *Id.* Accordingly, "UE 110 may be capable of communicating with UTRAN 120 and E-UTRAN 130." *Id.* ¶ 31.

2. *Independent claim 1*

a. A method comprising

Petitioner asserts that Flore discloses the preamble's "method" by disclosing "steps of a method or algorithm." Pet. 11–12 (citing Ex. 1005, claim 7, ¶ 69; Ex. 1003 ¶ 85). Patent Owner does not dispute Petitioner's arguments regarding the preamble. Petitioner has shown that Flore discloses the preamble, whether or not it is limiting.

b. [1b] receiving at a first distributed mobile architecture (DMA) gateway communications information for a communications network accessible by a second DMA gateway, the communications information indicating one or more devices accessible by one of a DMA server and a legacy communications network, wherein the first DMA gateway and the second DMA gateway participate in a DMA gateway communications network

Petitioner contends that Flore teaches limitation 1[b]. Pet. 12–14. We address this limitation in the following four subsections.

(1) "DMA" recitations: . . . *a first distributed mobile architecture (DMA) gateway . . . a second DMA gateway . . . a DMA server . . . a DMA gateway communications network*

Petitioner asserts that Flore discloses the DMA recitations of claim 1, including first and second DMA gateways and a DMA server. Pet. 12–14 (citing Ex. 1003 ¶¶ 87–93). In general, Petitioner relies on the following annotated version of Flore's Figure 1:

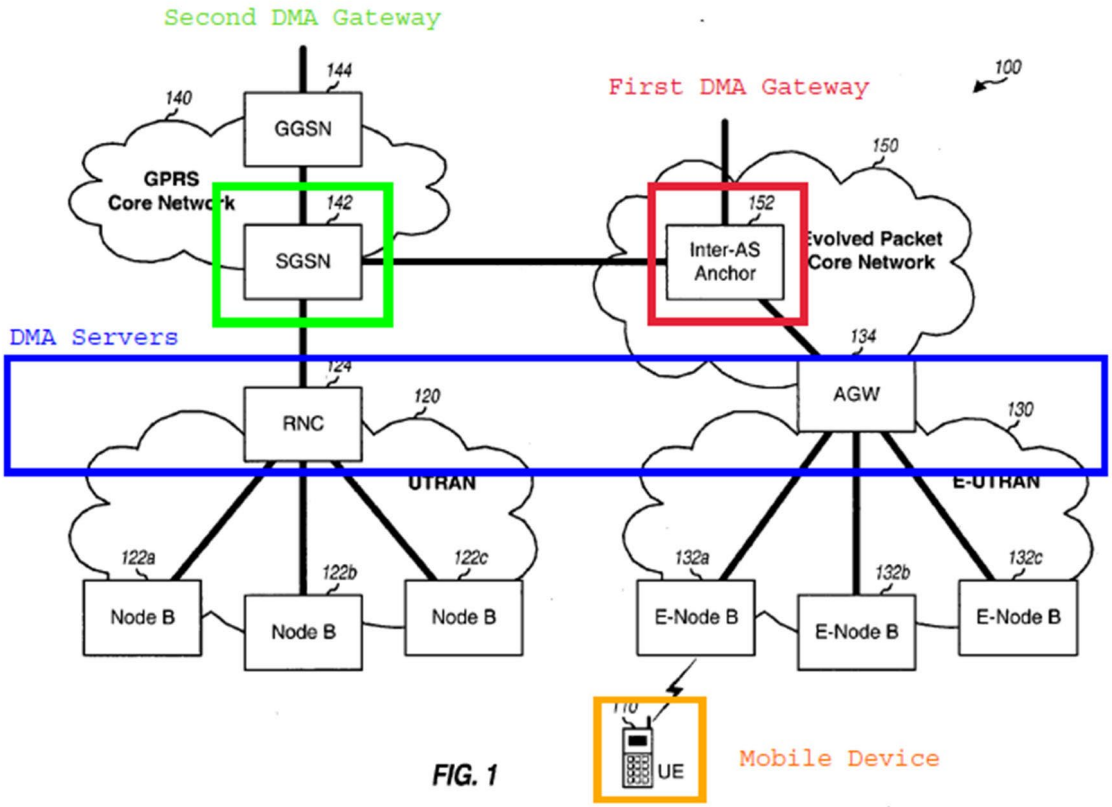

FIG. 1

Pet. 11. Figure 1 of Flore, which we describe in detail above, shows a deployment with a UTRAN and an E-UTRAN. Ex. 1005 ¶ 13. In Figure 1, Petitioner annotates Inter-AS Anchor 152 as the claimed "first DMA gateway" and SGSN 142 as the claimed "second DMA gateway." Pet. 11. Petitioner also annotates AGW 134 and RNC 124 as examples of the claimed "DMA server." *Id.* Petitioner further annotates UE 110 as the claimed "one or more devices." *Id.* Petitioner also refers to the networks on the left, including the UTRAN 120 and GPRS core network 140, as "legacy networks." *Id.* at 13.

Patent Owner contends that Flore does not disclose the claimed "distributed mobile architecture (DMA)" based on Patent Owner's construction for DMA. PO Resp. 29–34. For instance, Patent Owner

contends that Flore's RNC and AGW nodes are not DMA servers because they have no ability to route calls, which are instead routed by centralized MSCs. PO Resp. 29–30 (citing Ex. 2021 ¶¶ 79–81). Patent Owner also asserts that Flore does not disclose "a DMA network with DMA servers that are connected to other DMA servers through peer-to-peer connections." *Id.* at 31.[5] Finally, Patent Owner asserts that Flore discloses legacy 2G, 3G, and 4G networks, and DMA excludes legacy networks. *Id.* at 34.

Petitioner's arguments are more persuasive because Petitioner and Mr. Proctor persuasively show how each DMA recitation of claim 1 maps to a corresponding feature in Figure 1 of Flore. *See* Pet. 12–14 (citing Ex. 1003 ¶¶ 87–93). We find Mr. Proctor's testimony credible because, as we explain, it is consistent with other evidence. Figure 1 of Flores, reproduced above, depicts, for example, separate, distributed RNC and AGW systems for communicating with a mobile device (UE 110) in a mobile communications network (e.g., elements 120, 130, 140, 150). *See* Ex. 1005 ¶¶ 24–27, 31. Mr. Proctor testifies, and we agree, that "a POSA would have understood that the RNC and AGW described in Flore serve as the 'distributed mobile architecture (DMA) servers' of the asserted claims." Ex. 1003 ¶ 80.

---

[5] Patent Owner also contends that Petitioner shifts its allegation and contends that the "one or more Node Bs" are the DMA servers (not the RNC and AGW). PO Resp. 32–33. Petitioner responds, and we agree, that the "Petition consistently maintains that the RNC 124 and AGW 134 satisfy[] the 'DMA server' limitations, including by providing an ***annotated*** figure that is replicated in [Patent Owner's] response." Reply 13. The Sur-reply does not appear to respond on this point. We find Patent Owner's argument unavailing.

Mr. Proctor similarly testifies, with detailed supporting citations to Flore, that a POSITA would have understood that Flore's Inter-AS Anchor operates as the first DMA gateway and that Flore's SGSN operates as the second DMA gateway. *Id.* ¶¶ 81, 88–90. Finally, Mr. Proctor persuasively testifies that through Flore's Gn interface, the Inter-AS Anchor and SGSN participate in a DMA gateway communications network. *Id.* ¶ 92.

Patent Owner's arguments rely on a claim construction for DMA that we have not adopted. Contrary to Patent Owner's assertions, the claimed references to "DMA" do not require the ability to route calls or peer-to-peer connections. *See* PO Resp. 29–34. Nor does the claim preclude using "centralized hubs for call routing," and DMA does not exclude a "legacy communications network." *See id.* at 31, 34.

On this last point, even if DMA (or DMA server) were interpreted to exclude "a legacy communications network," Petitioner argues, and Patent Owner does not dispute, that only networks 120 and 140 in Flore Figure 1 (i.e., the left half of Figure 1) are legacy communications networks. Pet. 13, 14, 20; PO Resp. 34. Petitioner does not refer to the right half of Flore Figure 1 (networks 130, 150) as legacy communications networks. *See* Pet. 13–14, 20. Petitioner maps Flore's AGW server 134 in (non-legacy) network 130 to a DMA server, and also maps the RNC server 124 in (legacy) network 120 to a DMA server. *See id.* at 11. Thus, regardless of whether DMA server must exclude a legacy communications network, Petitioner has a persuasive mapping in Flore, legacy or non-legacy, that discloses the claimed DMA server.

Further, claim 1 does not recite a "DMA network" or multiple "DMA servers that are connected to other DMA servers through peer-to-peer

connections," as Patent Owner asserts. *See* PO Resp. 31. Claim 1, at most, refers to one "DMA server." It is axiomatic that limitations not appearing in the claim cannot be relied upon for patentability. *See In re Hiniker Co.*, 150 F.3d 1362, 1369 (Fed. Cir. 1998) ("[The] proffered facts . . . are not commensurate with the claim scope and are therefore unpersuasive."). Thus, Patent Owner's arguments based on these unclaimed terms are unavailing.

Accordingly, Petitioner persuades us that Flore discloses the DMA recitations of limitation [1b].

> *(2) receiving at a first distributed mobile architecture (DMA) gateway communications information for a communications network accessible by a second DMA gateway*

For this portion of limitation [1b], Petitioner explains that in Flore, during a handover from one network (E-UTRAN) to another (UTRAN), "numerous messages including communication information are received by the Inter-AS Anchor 152 (the 'first DMA gateway')." Pet. 12 (citing Ex. 1005, Fig. 4; Ex. 1003 ¶ 88). One example of this communication information, Petitioner asserts, is "Packet Data Protocol (PDP) context," which contains information such as routing information for IP packets. *Id.* (citing Ex. 1005 ¶ 46). Petitioner contends that Flore's Inter-AS Anchor 152 (first DMA gateway) updates its PDP context fields for UE 110 so that future packets for that UE are forwarded to SGSN 142 (second DMA gateway). *Id.* at 12–13 (citing Ex. 1005 ¶ 46).

Further, Petitioner explains that "[Flore's PDP context] message received by the Inter-AS Anchor 152 . . . includes information about UE 110, which following completion of the handover procedure is served by UTRAN 120, that includes SGSN 142." *Id.* at 13 (citing Ex. 1003 ¶ 90).

Mr. Proctor testifies that "thus a POSA would have recognized that the PDP context disclosed in Flore qualifies as 'communications information for a communications network accessible by a second DMA gateway.'" Ex. 1003 ¶ 90.

Patent Owner contends that Flore's PDP context is not "communications information for a communications network accessible by a second DMA gateway." PO Resp. 36 (citing Ex. 2021 ¶ 93). Patent Owner asserts that "[t]here is nothing in a PDP context that identifies any network ***accessible by*** a second gateway." *Id.* (underlining added). Rather, Patent Owner contends, the PDP context identifies the SGSN 142—Petitioner's second DMA gateway. *Id.* There is no information about any networks accessible by SGSN 142 contained in the PDP context, Patent Owner contends. *Id.* at 36–37.[6]

We agree with Petitioner that Flore's PDP context discloses the claimed "communications information" received at the first DMA gateway. Flore describes the PDP context as containing "various parameters such as routing information for IP packets (e.g., the IP addresses of UE 110 and Inter-AS Anchor 152)." Ex. 1005 ¶ 46. Flore further teaches that "Inter-AS Anchor 152 updates its PDP context fields for UE 110 so that future packets

---

[6] Despite starting its argument addressing limitation [1b], Patent Owner then concludes that Flore therefore does not disclose limitation [1d], "receiving a communication at the first DMA gateway for a target device ***indicated by the communications information to be served by the second DMA gateway***." PO Resp. 37. It appears that Patent Owner's reference to limitation [1d] here is misplaced, and the Sur-reply does not appear to directly address limitation [1d]. We therefore address limitation [1d] in a separate section below.

for the UE are forwarded to SGSN 142 instead of AGW 134." *Id.* We credit Mr. Proctor's testimony explaining why a person having ordinary skill in the art would have recognized that Flore's PDP context meets this recitation:

> this message received by the Inter-AS Anchor 152; *i.e.*, the **"first DMA gateway"**, includes information about UE 110, which following completion of the handover procedure is served by UTRAN 120, that includes SGSN 142 (the **"second DMA gateway"**), and thus a POSA would have recognized that the PDP context qualifies as "communications information for a communications network accessible by a second DMA gateway."

Ex. 1003 ¶ 90.

In the Reply, Petitioner argues, and we agree, that "[t]he claims do not require that the communications information ***identify a network*** accessible by a second gateway," as Patent Owner argues. Reply 15 (citing PO Resp. 36). The claim recites "receiving . . . communications information ***for*** a communications network accessible by a second DMA gateway," not "<u>identify</u> a network." *See id.* Thus, Patent Owner's arguments are unavailing because they are not commensurate with the scope of claim 1.

The Sur-reply further argues that the specification requires us to interpret "communications information for a communications network" to "refer[] to the portion of register information stored in the home DMA register of a DMA gateway that identifies the communications network," which "maps the identity of the communications network to the devices served by the network." Sur-reply 6–8 (citing, e.g., Ex. 1001, 17:29–31, 11:20–25, 17:63–18:8, Fig. 12). Patent Owner supplies no explanation for reading in these limitations from the specification, and we decline to do so.

Thus, Patent Owner's argument based on an unclaimed identification of a network is unavailing.

Accordingly, Petitioner persuades us that Flore discloses the "receiving at a first distributed mobile architecture (DMA) gateway communications information for a communications network accessible by a second DMA gateway" portion of limitation [1b].

(3) the communications information indicating one or more devices accessible by one of a DMA server and a legacy communications network

Petitioner argues that Flore teaches this portion of limitation [1b] because the PDP context information identifies UE 110 undergoing handover. Pet. 13 (citing Ex. 1005 ¶ 46 (PDP context contains "routing information for IP packets (e.g., the **IP addresses of UE 110** and Inter-AS Anchor 152)"); Ex. 1003 ¶ 91). UE 110 is accessible by "legacy networks 120 and 140," and the message facilitates handover from the E-UTRAN 130 and network 150 (i.e., non-legacy networks), Petitioner further argues. *Id.* at 13–14 (citing Ex. 1005 ¶ 29). Thus, Petitioner concludes, Flore teaches this portion of limitation [1b].

Patent Owner argues that because Flore sends its PDP context "***before*** the UE is handed over to the new communications network," the UE is still subscribed to the AGW 134 and cannot be accessed by SGSN 142 (Petitioner's second DMA gateway). PO Resp. 37 (citing Ex. 1005 ¶¶ 46, 57–58, Fig. 7). "At the time the PDP context is sent," Patent Owner argues, "the UE is still subscribed to the first network's AGW 134, and cannot be accessed by SGSN 142, which Petitioners contend is the second DMA gateway." *Id.* Thus, Patent Owner concludes, "the UE that is the subject of

the PDP context is not a device identified as 'accessible by one of a DMA server and a legacy communications network' via the second DMA gateway." *Id.* (citing Ex. 2021 ¶¶ 95–96).

Petitioner argues, and we agree, that Patent Owner argues nonexistent claim limitations, including "that the identified device must be accessible by a DMA server ***via the second DMA gateway***." Reply 16. Patent Owner's assertion that "the UE that is the subject of the PDP context is not a device identified as 'accessible by one of a DMA server and a legacy communications network' *via the second DMA gateway*" adds the words "via the second DMA gateway" to the claim and is therefore not commensurate with the scope of claim 1. *See* PO Resp. 37.

Patent Owner responds that the claim phrase "communications information for a communications network ***accessible by a second DMA gateway***" requires that "the identified device must be accessible by a DMA server via the second DMA gateway." Sur-reply 5. We disagree. The claim's recitation of "a communications network accessible by a second DMA gateway" does not require that a *particular device* must be accessible "via the second DMA gateway." Instead, this claim phrase recites that the communications information is broadly "for" a communications network, which *communications network* (not the "one or more devices") is accessible by a second DMA gateway. Flore's PDP context satisfies the recitation "communications information for a communications network accessible by a second DMA gateway" for reasons we explain in the previous section.

Petitioner also contends that Patent Owner argues a nonexistent claim limitation "that the identified device must be accessible by a DMA server via the second DMA gateway ***at the time the communications information***

is received." Reply 16 (citing PO Resp. 37 ("Flore's PDP context is sent ***before*** the UE is handed over . . . . At the time the PDP context is sent, the UE is still subscribed to the first network's AGW 134, and cannot be accessed by SGSN 142 . . . .")). Petitioner asserts that all the claim requires is receiving communications information "indicating one or more devices accessible by ***one*** of a DMA ***server*** and a legacy communications network." *Id.* In Petitioner's view, Patent Owner "does not dispute that, at the time the update PDP context message is sent, the UE is accessible by AGW [134], which satisfies the 'DMA server' language." *Id.* (citing PO Resp. 37 ("at the time the PDP context is sent, the UE is still subscribed to the first network's AGW 134")). Petitioner adds that Patent Owner also does not dispute that "***after*** the handover is complete, the UE is accessible by RNC 124 (also a 'DMA server' . . .) via SGSN 142 (the second DMA gateway)." *Id.*

In the Sur-reply, Patent Owner asserts that "Petitioner's new theory is directly contradicted by the plain language of the claim which includes a present tense requirement that the UE be '***accessible by*** one of a DMA server and a legacy communications network.'" Sur-reply 5. Patent Owner argues that we should decline Petitioner's invitation to rewrite the claims to require "communications information . . . indicating one or more devices ***not currently*** accessible by one of a DMA server and a legacy communications network." *Id.* at 5–6.

We agree with Petitioner. There is no requirement in claim 1 "that the identified device must be accessible by a DMA server via the second DMA gateway ***at the time the communications information is received***," as Patent Owner implies. *See* Reply 16; PO Resp. 37; Sur-reply 5. Yet regardless of timing, Flore meets the claim. At one point during a call in Flore, the device

is accessible by AGW 134 (a DMA server), and at another point, the device is accessible by SGSN 142 (part of a legacy communications network (network 140)). Flore's PDP context indicates the device's accessibility by AGW 134 or SGSN 142, as the case may be. *See* Ex. 1005 ¶ 46. As Flore explains, "UE 110 may have established a call with E-UTRAN 130 by activating a Packet Data Protocol (PDP) context [the communications information] . . . . *AGW 134 [a DMA server] stores the PDP context for UE 110 during the call*." *Id.* Flore further explains that AGW 134, "in response to the request from SGSN 142, forwards the PDP context to Inter-AS Anchor 152," thereby disclosing receiving the communications information at the first DMA gateway. *Id.* (emphasis added). Then, "Inter-AS Anchor 152 updates its PDP context fields for UE 110 so that future packets for the UE *are forwarded to SGSN 142* [the second DMA gateway, part of the legacy communications network] instead of AGW 134." *Id.* (emphasis added). The claimed recitation "indicating one of a" permits the prior art to teach indicating either a DMA server or a legacy communications network, yet Flore's PDP context indicates *both*.

Thus, Flore discloses the "communication information indicating one or more devices accessible by one of a DMA server and a legacy communications network" portion of limitation [1b].

(4) wherein the first DMA gateway and the second DMA gateway participate in a DMA gateway communications network

For this final portion of limitation [1b], we refer again to Figure 1 of Flore, shown below as annotated by Petitioner:

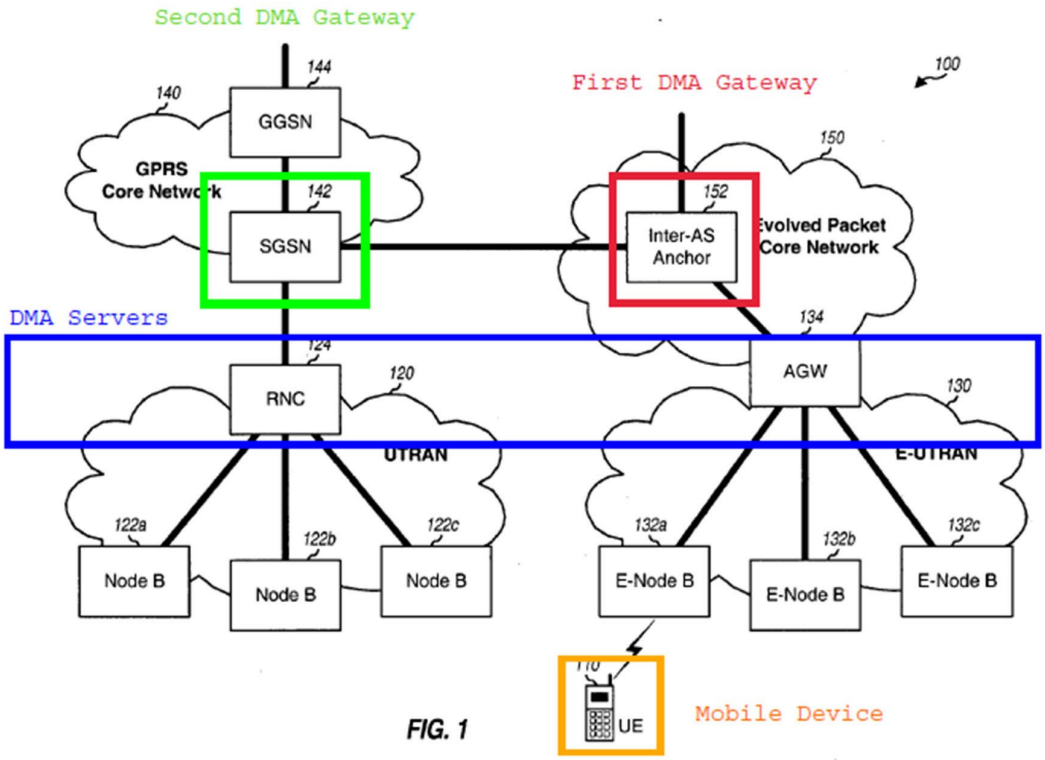

FIG. 1

Petitioner asserts that in Figure 1, SGSN 142 ("second DMA gateway") and Inter-AS Anchor 152 ("first DMA gateway") communicate via a "Gn interface," represented by a line connecting SGSN 142 and Inter-AS Anchor 152. Pet. 14 (citing Ex. 1005 ¶¶ 29, 48). Thus, Petitioner concludes, "SGSN 142 ('second DMA gateway') and Inter-AS Anchor 152 ('first DMA gateway') 'participate in a DMA gateway communications network.'" *Id.*

Patent Owner argues that "Petitioner identified the Gn interface as the 'gateway communications network.'" PO Resp. 35. According to Patent Owner, the claims require that a "network" be used to connect the two DMA

gateways. *Id.* Patent Owner contends, however, that "Petitioners have not identified any ***network*** in Flore used to connect the DMA gateways." *Id.*[7]

Petitioner responds that the claim does not require "a 'network' be used to connect DMA gateways," but rather, the "first DMA gateway and the second DMA gateway ***participate*** in a DMA gateway communications network." Reply 14. In other words, Petitioner argues, there is no requirement for a network "***between*** each DMA gateway, only that each DMA gateway is connected to another ***as part of a network***." *Id.* Petitioner further explains that in Flore, "the Inter-AS Anchor and SGSN are connected via the Gn interface, and form a 'DMA gateway communications network' in which each of the SGSN and Inter-AS Anchor participates." *Id.*

Patent Owner asserts that the Reply shifts Petitioner's mapping from the Gn interface "***which is a***" "gateway communications network" to the Inter-AS Anchor and SGNS now "***form[ing]***" the claimed network. Sur-reply 25 (citing Pet. 22 (dependent claim 7 argument asserting that "the Gn interface . . . is a 'gateway communications network'"); Reply 14). Patent Owner contends Petitioner's Reply argument is new and untimely. *Id.* Patent Owner also reiterates, based on its DMA claim construction, that Flore's Gn interface is a legacy interface and that Flore's Inter-AS Anchor and SGSN are not DMA gateways. *Id.* at 25–26.

---

[7] Patent Owner also contends that "the Gn interface is part of the conventional network architectures that are different from the claimed [DMA] network." PO Resp. 35. This argument relies on Patent Owner's flawed construction for DMA, which we have not adopted.

We agree with Petitioner that Patent Owner misreads the claim. Petitioner summarizes our preliminary views on the matter from our Institution Decision:

> As Mr. Proctor explains, and as correctly noted by the Board, "because they communicate with each other via a Gn interface, 'a POSA would have understood that the SGSN [142] (the 'second DMA gateway') and Inter-AS Anchor 152 (the 'first DMA gateway') participate in a DMA gateway communications network."

Reply 14 (citing Dec. 22). Based on the full trial record, we reiterate this position, as supported by Mr. Proctor's credible testimony, as our own.

We also do not view Petitioner as raising an untimely argument in the Reply. The Petition asserts for claim 1 that "SGSN 142 ('second DMA gateway') and Inter-AS Anchor 152 ('first DMA gateway') 'participate in a DMA gateway communications network.'" Pet. 14. Patent Owner's assertion that Petitioner's sole argument is that the Gn interface "is" a gateway communication network also selectively quotes Petitioner's dependent claim 7 argument while ignoring Petitioner's independent claim 1 argument. *See* Sur-reply 25. And Petitioner's Reply argument that Flore's components "form" a DMA gateway communications network permissibly elaborates on the Petition's contention that because Inter-AS Anchor 152 and SGSN 142 "communicate via a Gn interface," they "participate" in a DMA gateway communications network. *See* Reply 14; *Chamberlain Grp., Inc. v. One World Techs., Inc.*, 944 F. 3d 919, 925 (Fed. Cir. 2019) ("Parties are not barred from elaborating on their arguments on issues previously raised.").

Patent Owner's sole argument against the merits of Petitioner's participation theory is based on Patent Owner's construction of "DMA,"

which we have not adopted. *See* Sur-reply 25 ("Petitioner's waived theory also fails on the merits because the Inter-AS Anchor and SGSN are not 'DMA gateways.'"). Accordingly, Petitioner persuades us that Flore discloses the final portion of limitation [1b]: "wherein the first DMA gateway and the second DMA gateway participate in a DMA gateway communications network."

Thus, Petitioner persuades us that Flore discloses the entirety of limitation [1b].

c. [1c] storing the communications information in a home DMA register of the first DMA gateway

Petitioner contends that Flore discloses this limitation because during handover of UE 110, Flore's AGW 134 stores the PDP context (the "communications information") for UE 110 and forwards the PDP context to Inter-AS Anchor 152 (the "first DMA gateway"). Pet. 15 (citing Ex. 1003 ¶¶ 94–98; Ex. 1005 ¶ 46). Petitioner further highlights Flore's teaching that "Inter-AS Anchor 152 **updates its PDP context fields for UE 110** so that future packets for the UE are forwarded to SGSN 142 instead of AGW 134." *Id.* (citing Ex. 1005 ¶ 46).

After handover, Inter-AS Anchor 152 acts as a GGSN, which "necessarily contains a location register," Petitioner contends. *Id.* (citing Ex. 1003 ¶¶ 95–96; Ex. 1005 ¶¶ 39, 46, 50). In support, Petitioner cites to a standards document, which explains that "[t]he location register function in the GGSN stores . . . rout[]ing information . . . for each subscriber for which the GGSN has at least one PDP context active." *Id.* at 15–16 (citing Ex. 1006, 13–14). Petitioner contends that this location register constitutes a "home DMA register," which the Inter-AS Anchor includes because it

emulates a GGSN. *Id.* at 16 (citing Ex. 1003 ¶ 96). In sum, Petitioner argues, Flore discloses that the communications information (PDP context) is stored in a home DMA register (GGSN location register) of the first DMA gateway (Inter-AS Anchor). *Id.* at 15–16.

Patent Owner disputes this. PO Resp. 38–40. While Patent Owner acknowledges that Flore's "PDP context is stored at the GGSN register," Patent Owner argues that Flore's GGSN location register is not the claimed "home DMA register." *Id.* at 38 (citing Ex. 2021 ¶ 97). Patent Owner asserts that "[a]ccording to the '988 [p]atent, the 'home DMA register' stores 'communications information,'" namely, "home location register (HRL) information" that "indicates devices serviced by networks accessible by the second DMA gateway." *Id.* (citing Ex. 1001, 3:4–7, 11:10–27, 14:9–11, 15:14–28). Patent Owner then asserts that Flore's GGSN register is not a home DMA register "because it does not store location register information for its own network *or* any other networks." *Id.* at 39. Patent Owner thus argues, "Flore does not disclose that the HLR functionality is also located at the GGSN location register." *Id.* (citing Ex. 2021 ¶ 100).

Petitioner responds, and we agree, that Patent Owner again reads limitations into the claim. Reply 17. That is, the claim does not require "communications information" to include "HRL information" or "location register information for its own or any other networks." *Id.* Further, Petitioner argues, and we agree, that claim 9 recites HLR data as an alternative to other types of register data, so it would be "illogical and contrary to the doctrine of claim differentiation to require claim 1 to require HLR data." *Id.* at 18.

Patent Owner asserts in the Sur-reply that it "never argued that the home DMA register must store '***HRL***' data." Sur-reply 9. But this argument overlooks that Patent Owner did argue "Flore does not disclose that the *HLR functionality* is also located at the GGSN location register." PO Resp. 38 (emphasis added). Patent Owner also changes tack, arguing that "[n]ot only is the PDP [context] not stored in an HLR [in Flore], but it is also not stored in any ***other*** location register because it is not location register information," citing dependent claim 9's "HRL, VLR, and CLR registers." Sur-reply 9. This argument is unpersuasive because to the extent Patent Owner reads limitations from dependent claim 9 into claim 1, this is improper. Further, Petitioner persuasively explains that when the Inter-AS Anchor in Flore acts like a GGSN, "[t]he *location register* function in the GGSN stores . . . *rout[]ing information* . . . for each subscriber for which the GGSN has at least one *PDP context* active." Pet. 15–16 (citing Ex. 1006, 13–14). And Flore describes the PDP context as including "routing information." Ex. 1005 ¶ 46.

Petitioner also relies on another theory, which is that a POSITA would understand that the PDP context fields for UE 110 are a home DMA register of the Inter-AS Anchor because Inter-AS Anchor "necessarily has a list of entries for the UEs it serves, such as UE 110." Pet. 16 (citing Ex. 1003 ¶ 97). Thus, Petitioner adds, "by updating the PDP Context information with the address of SGSN 142 instead of AGW 134, the Inter-AS Anchor stores the communications information included in the Update PDP Context Response message to its 'home DMA register.'" *Id.* at 16–17 (citing Ex. 1003 ¶ 97).

To this theory, Patent Owner responds that "the home DMA register, and HLRs more generally, include more than a 'list of entries for the UEs it serves.'" PO Resp. 39 (citing Ex. 2021 ¶ 101). HLRs store location information for the subscribers it serves, not just their identities, Patent Owner argues. *Id.* at 39–40. Patent Owner further contends that PDP context fields are "categorically different than the location information stored in an HLR/home DMA register." *Id.* These arguments are unavailing because Patent Owner again reads in nonexisting limitations into the claim, such as "include more than a 'list of entries for UEs it serves,'" HRLs "store 'location' information for the subscribers it serves, not just their identities," and the like. *See id.*

Under both of its theories, Petitioner articulates persuasive reasoning, supported by record evidence, for why Flore discloses this limitation. We find persuasive Petitioner's contentions that (1) Inter-AS Anchor acts as a GGSN, which (2) includes a location register that stores routing information for each subscriber that has an active PDP context. Pet. 15–16; Ex. 1003 ¶ 96. As we already explain above, we agree with Petitioner that Flore's PDP context (including its routing information) constitutes the claimed "communications information." And, as Petitioner and Mr. Proctor persuasively explain, this communications information is stored in a location register of the GGSN, which acts as a home DMA register. *See* Pet. 15–16 (citing Ex. 1003 ¶¶ 94–98; Ex. 1006, 13–14; Ex. 1005 ¶¶ 39, 46, 50).

We further find persuasive Petitioner's contention that a POSA would understand that the PDP context fields for UE 110 are a home DMA register of the Inter-AS Anchor because Inter-AS Anchor "necessarily has a list of entries for the UEs it serves, such as UE 110." Pet. 16 (citing Ex. 1003

¶ 97). It is undisputed that the Inter-AS Anchor "updates its PDP context fields for UE 110," Ex. 1005 ¶ 46, so we agree with Petitioner that Flore's updating of PDP context fields would necessarily include a list of entries for UEs, which would thus be a home DMA register. *See* Ex. 1003 ¶ 97.

Petitioner therefore persuades us that Flore discloses limitation [1c].

d. [1d] receiving a communication at the first DMA gateway for a target device indicated by the communications information to be served by the second DMA gateway

Petitioner argues that Flore teaches that the Inter-AS Anchor 152 "updates its PDP context fields for UE 110 so that **future packets for the UE are forwarded to SGSN 142 instead of AGW 134**." Pet. 17 (quoting Ex. 1005 ¶ 46) (emphasis Petitioner's). Petitioner therefore contends that Flore thus discloses receiving packets ("a communication") at Inter-AS Anchor 152 ("first DMA gateway") having the IP address of UE 110 as their destination address ("for a target device indicated by the communication information"). *Id.* (citing Ex. 1003 ¶ 100; Ex. 1005 ¶ 60).

Patent Owner does not dispute this limitation. As we mention above, Patent Owner refers to this limitation in passing when discussing limitation [1b], but this reference to limitation [1d] appears to be in error. PO Resp. 37. To the extent Patent Owner does dispute this limitation, its argument is not adequately explained and is therefore unpersuasive.

We determine that Petitioner shows that Flore teaches limitation [1d].

e. [1e] routing the communication from the first DMA gateway to the target device by relaying the communication from the first DMA gateway to the second DMA gateway via the DMA gateway communications network

Petitioner argues that Flore teaches "the Inter-AS Anchor 152 routes packets addressed to UE 110 to SGSN 142 after handover, in accordance with the updated PDP context." Pet. 17–18 (citing Ex. 1005 ¶¶ 46, 60, Fig. 8; Ex. 1003 ¶¶ 102–105). Flore discloses, for example, that "[t]he Inter-AS Anchor may emulate a GGSN after the handover to the second RAN and may exchange packets for the UE with the SGSN." Ex. 1005 ¶ 60. Petitioner also argues that Flore teaches that "'Inter-AS Anchor 152 updates its PDP context fields for UE 110 **so that future packets for the UE are <u>forwarded to</u> SGSN 142** instead of AGW 134.'" Pet. 18 (quoting Ex. 1005 ¶ 46).

Patent Owner does not dispute that Flore discloses this limitation. We agree with Petitioner that Flore discloses limitation [1e].

f. Summary as to Claim 1

Based on the foregoing, Petitioner has proven by a preponderance of the evidence that Flore anticipates claim 1.

3. *Dependent claims 3–9 and 20*

Petitioner contends that dependent claims 3–9 and 20 are also anticipated by Flore. Pet. 19–24. Petitioner provides a detailed analysis explaining where Flore discloses the limitations in these dependent claims. Patent Owner does not dispute these assertions, except for claims 7, 9, and 20, which we address below. PO Resp. 40–45.

We have reviewed Petitioner's contentions and supporting evidence for claims 3–6 and 8 and find them persuasive. Thus, we determine that Petitioner has proven by a preponderance of the evidence that claims 3–6 and 8 are anticipated by Flore.

a. Dependent Claim 7

Dependent claim 7 recites, "The method of claim 1, further comprising, upon receiving the communications information, the first DMA gateway automatically sending at least a portion of the communications information to the second DMA gateway via the gateway communications network."

Petitioner argues that Flore discloses this limitation by teaching that "AGW 134 stores the PDP context for UE 110 during the call and . . . forwards the PDP context to Inter-AS Anchor 152," the first DMA gateway, which then "forwards the information in an Update PDP Context Response message to SGSN 142," the second DMA gateway. Pet. 21 (citing Ex. 1003 ¶¶ 116–118; Ex. 1005 ¶ 46). Petitioner adds that this update message is "sent across the Gn interface, which is a 'gateway communications network.'" *Id.* at 22 (citing Ex. 1003 ¶ 117; Ex. 1005 ¶¶ 29, 40).

Patent Owner raises two arguments for this claim. First, Patent Owner raises a similar argument as for limitation [1b], i.e., that "PDP context messages are sent ***before*** the handover is complete," so "it does not identify a UE device accessible via [the] alleged second DMA gateway." PO Resp. 41. As we explain above, Patent Owner argues that the words "via the second DMA gateway" are not taught by Flore, but these words are not part of the claim. Thus, Patent Owner's argument is not commensurate with the scope of claims 1 and 7.

Patent Owner's second argument is that "none of the elements in the Update PDP Context Response message indicates the UE device, let alone one accessible via the alleged second DMA gateway." PO Resp. 41 (citing Ex. 2021 ¶ 105). The first part of this argument, that the Update PDP Context Response message does not indicate the UE device, is simply incorrect. Flore discloses that the PDP context "contains . . . the IP address[] of UE 110," and the Inter-AS Anchor "forwards the information"—i.e., including the UE's IP address—"in an Update PDP Context Response message." Ex. 1005 ¶ 46. The second part of Patent Owner's argument refers to "via the alleged second DMA gateway," which is not part of the claim. Thus, Patent Owner's arguments are unavailing.

We agree with Petitioner that Flore teaches this limitation because Petitioner has already established that Flore's PDP context constitutes the claimed "communications information" and because Petitioner and Mr. Proctor further establish that Flore's Inter-AS Anchor 152 (first DMA gateway) "forwards the [PDP context] information in an Update PDP Context Response message to SGSN 142," the second DMA gateway, via the Gn interface. Pet. 21 (citing Ex. 1003 ¶¶ 116–118; Ex. 1005 ¶ 46).

Petitioner therefore has proven by a preponderance of the evidence that Flore anticipates claim 7.

b. Dependent Claim 9

Dependent claim 9 recites,

> 9. The method of claim 1, wherein the communications information includes communications register data including at least one of:
>
> a portion of a community location register;

> *a portion of home location register (HLR) data for the communications network*; and
>
> a portion of visitor location register (VLR) data for the communications network.

(Emphasis added.) Because claim 9 recites three types of register data disjunctively, Petitioner focuses on showing that one of these, "a portion of home location register (HLR) data for the communications network," is taught by Flore. Pet. 23–24.

Petitioner asserts that Flore's PDP context contains the IP address of the Inter-AS Anchor, which is a portion of HLR data for the communications network. *Id.* at 23 (citing Ex. 1003 ¶ 46; Ex. 1003 ¶ 121). Petitioner asserts that the HLR "is the location register to which a mobile subscriber is assigned for record purposes such as subscriber information." *Id.* (citing Ex. 1006, 13; Ex. 1003 ¶ 121). The PDP context includes the claimed "communications register data including a portion of . . . HLR data for the communications network," Petitioner argues, because the Inter-AS Anchor is the acting GGSN for the subscriber (the location register for which it is assigned). *Id.* at 23–24 (citing Ex. 1003 ¶ 121).

Patent Owner disputes Petitioner's reliance on PDP context because it asserts that the HLR does not store the PDP context. PO Resp. 43. Rather, Patent Owner contends, "the PDP context is stored in the GGSN location register," not the HLR. *Id.* (citing Ex. 1006, 13–14; Ex. 2016, 1; Ex. 2021 ¶¶ 110–111).

Petitioner responds that "just because the PDP context is not stored in the HLR does not mean the PDP [context] cannot store part of [the] HLR data." Reply 19. Petitioner further argues that Flore's PDP context includes a portion of the HLR data:

> Indeed, Mr. Proctor testified that the HLR "is the location register to which a mobile subscriber is assigned for record purposes, and "because the Inter-AS anchor is the acting GGSN for the subscriber, the PDP context includes . . . 'communication register data including a portion of' HLR data," including routing information, the IP address of the UE, the IP address of the Inter-AS Anchor, and QoS profiles.

Id. (citing Ex. 1003 ¶ 121).[8]

Patent Owner responds that Petitioner's argument that PDP context has overlapping data with HLR "departs from [c]laim 9's requirement that the data is part of the recited registers, and reinforces the point that because the PDP context is not part of any recited register, it does not 'store part' of the register location data of those registers." Sur-reply 27. Patent Owner adds, "[b]ecause it is undisputed that the PDP context is not location register information, the PDP context does not include 'a portion of . . . ***location register***' data of the HLR, VLR, and/or CLR registers." *Id.*

We agree with Petitioner. Claim 9 recites "wherein the communications information includes communications register data including . . . a portion of [HLR] data" and does not require that data to be "part of any recited register" or to "'store part' of the register location data of those registers," as Patent Owner asserts. *See id.* Mr. Proctor testifies, and Patent Owner does not dispute, that Flore's PDP context includes a portion of HLR data. Ex. 1003 ¶ 121; *see* Sur-reply 27.

---

[8] Petitioner also argues that the PDP context also includes a portion of VLR data, satisfying the "portion of visitor location register (VLR) data for the communications network" alternative in claim 9. Reply 19. We do not consider this argument, however, because it is a new argument that should have been raised in the Petition. *See* 37 C.F.R. § 42.23(b).

We therefore determine that Petitioner has proven by a preponderance of the evidence that Flore anticipates claim 9.

c. Dependent Claim 20

Dependent claim 20 recites, "The method of claim 1, wherein the first DMA gateway receives the communications information from the second DMA gateway." Petitioner contends that Flore discloses that its handover techniques may be performed in reverse, from the legacy UTRAN network (left half of Figure 1) to the E-UTRAN network (right half of Figure 1). Pet. 24. Specifically, Flore states,

> [T]he inter-system handover techniques may also be used for handover from a UTRAN to an E-UTRAN. . . . The message flow in FIG. 4 may be used for handover from the UTRAN to the E-UTRAN, albeit with AGW 134 in procedure 400 being replaced with a source RNC in the UTRAN, Inter-AS Anchor 152 being replaced by the old SGSN, target RNC 124 being replaced by AGW 134, and target SGSN 142 being replaced by Inter-AS Anchor 152.

Id. (quoting Ex. 1005 ¶ 53). Petitioner therefore explains that thus,

> instead of the AGW sending a PDP context to the Inter-AS Anchor, source RNC sends the PDP context for the UE 110 to the SGSN 142, and subsequently, instead of the Inter-AS Anchor sending the Update PDP Context Response message to SGSN, the SGSN (the "second DMA gateway") "forwards the information in an Update PDP Context Response message to" Inter-AS Anchor 152 (the "first DMA gateway").

Id. (citing Ex. 1005 ¶ 46; Ex. 1003 ¶ 123).

Patent Owner contends that throughout the Petition, Petitioner argues that Inter-AS Anchor 152 forwards the PDP context to SGSN, but that for claim 20 only, Petitioner turns that theory on its head. PO Resp. 43–44. Patent Owner argues that "Petitioners cannot shift their position here while

also maintaining their original position to facially satisfy the other claims." *Id.* at 44–45.

We agree with Petitioner that Flore discloses claim 20. Petitioner cites persuasively to Flore's teachings that "[t]he inter-system handover techniques may also be used for handover from a UTRAN to an E-UTRAN," which is simply the reverse of the main process disclosed in Flore. *See* Pet. 24 (citing Ex. 1005 ¶ 53). Based on the disclosures we reproduce from Flore above, Petitioner and Mr. Proctor persuasively explain that this reverse process in Flore discloses claim 20's first DMA gateway receiving the communications information from the second DMA gateway. *See id.*; Ex. 1003 ¶ 123. Patent Owner does not engage with this disclosure in Flore, and thus, its argument is unavailing.

We therefore determine that Petitioner has proven by a preponderance of the evidence that Flore anticipates claim 20.

III. CONCLUSION[9]

In summary:

---

[9] Should Patent Owner wish to pursue amendment of the challenged claims in a reissue or reexamination proceeding subsequent to the issuance of this decision, we draw Patent Owner's attention to the April 2019 *Notice Regarding Options for Amendments by Patent Owner Through Reissue or Reexamination During a Pending AIA Trial Proceeding.* *See* 84 Fed. Reg. 16,654 (Apr. 22, 2019). If Patent Owner chooses to file a reissue application or a request for reexamination of the challenged patent, we remind Patent Owner of its continuing obligation to notify the Board of any such related matters in updated mandatory notices. *See* 37 C.F.R. § 42.8(a)(3), (b)(2).

Claim(s)	35 U.S.C. §	Reference(s)/Basis	Claim(s) Shown Unpatentable	Claim(s) Not Shown Unpatentable
1, 3–9, 20	102	Flore	1, 3–9, 20	

IV. ORDER

It is hereby:

ORDERED that Petitioner has shown by a preponderance of the evidence that claims 1, 3–9, and 20 of the ’988 patent are unpatentable;

FURTHER ORDERED that, because this is a Final Written Decision, parties to the proceeding seeking judicial review of the decision must comply with the notice and service requirements of 37 C.F.R. § 90.2.

FOR PETITIONER:

Robert N. Kang
Barry K. Shelton
WINSTON & STRAWN LLP
rkang@winston.com
bshelton@winston.com

FOR PATENT OWNER:

James Hannah
Aaron M. Frankel
Jeffrey H. Price
Jenna Fuller
Jeffrey Eng
KRAMER LEVIN NAFTALIS & FRANKEL LLP
jhannah@kramerlevin.com
afrankel@kramerlevin.com
jprice@kramerlevin.com
jfuller@kramerlevin.com
jeng@kramerlevin.com