UNITED STATES PATENT AND TRADEMARK OFFICE

BEFORE THE PATENT TRIAL AND APPEAL BOARD

MICROSOFT CORPORATION and AFFIRMED NETWORKS, INC.,
Petitioner,

v.

LEMKO CORPORATION,
Patent Owner.

Case IPR2023-00531
U.S. Patent No. 7,855,988

PATENT OWNER'S RESPONSE

TABLE OF CONTENTS

I. INTRODUCTION 1

II. THE '988 PATENT IS BASED ON LEMKO'S NEW DISTRIBUTED-MOBILE-ARCHITECTURE PARADIGM 2

A. Conventional Cellular Networks Used a Centralized, Hierarchical Network Architecture 2

B. Lemko's Claimed Distributed Mobile Architecture (DMA) Introduced a Distributed Cellular Network Architecture 8

III. FLORE DISCLOSES TECHNIQUES FOR HANDOVER OF A UE BETWEEN HIERARCHICAL 4G AND 3G NETWORKS 14

IV. LEVEL OF ORDINARY SKILL IN THE ART 17

V. CLAIM CONSTRUCTION: DISTRIBUTED MOBILE ARCHITECTURE 18

A. "Distributed Mobile Architecture (DMA)" is Distributed with Call-Routing Functionality Located on DMA Servers 18

B. Each "DMA Server" is Connected to Other DMA Servers Through Peer-to-Peer Connections 21

C. "Distributed Mobile Architecture (DMA)" Networks are Not Legacy Communications Networks 25

VI. FLORE DOES NOT ANTICIPATE THE CHALLENGED CLAIMS 28

A. Flore Does Not Disclose a "Distributed Mobile Architecture" 29

1. Flore Does Not Disclose a Network with Distributed Routing Functionality 29

2. Flore Does Not Disclose "DMA Servers" Connected Via Peer-to-Peer Connections 31

3. Flore's Legacy Networks Are Not a "Distributed Mobile Architecture" 34

B. Flore Does Not Disclose a "DMA Gateway Communications Network" 34

C. Flore Does Not Disclose "Communications Information for a Communications Network Accessible by a Second DMA Gateway" 36

1. Flore's PDP Context Does Not Identify any Network Accessible by a Second Gateway 36

2. Flore's PDP Context Does Not Identify a Device "Accessible by One of a DMA Server and a Legacy Communications Network" Via the Second DMA Gateway....37

3. Flore Does Not Disclose Storing the Communications Information in a Home DMA Register of the First DMA Gateway 38

D. FLORE FAILS TO DISCLOSE THE ADDITIONAL LIMITATIONS RECITED IN THE DEPENDENT CLAIMS 40

1. Dependent Claim 7: Flore Does Not Disclose "the First DMA Gateway Automatically Sending at Least a Portion of the Communications Information to the Second DMA Gateway via the Gateway Communications Network" 40

2. Dependent Claim 8: Flore Does Not Disclose "In Response to Receiving a Query from the Second DMA Gateway for the Communications Information, the First DMA Gateway Sending at Least a Portion of the Communications Information to the Second DMA Gateway via The Gateway Communications Network....42

3. Dependent Claim 9: Flore Does Not Disclose "Communications Register Data Including at Least one of . . . a Portion of the Home Location Register (HLR) Data for the Communications Network" 42

4. Dependent Claim 20: Flore Does Not Disclose that "the First DMA Gateway Receives the Communications Information From the Second DMA Gateway" 43

VII. CONCLUSION.....45

TABLE OF AUTHORITIES

Page(s)

Cases

Applied Med. Res. Corp. v. U.S. Surgical Corp.,
448 F.3d 1324 (Fed. Cir. 2006) 26

CAE Screenplates Inc. v. Heinrich Fiedler GmbH & Co.,
224 F.3d 1308 (Fed. Cir. 2000) 26

Lego Sys., Inc. v. MQ Gaming LLC,
No. IPR2020-01446, Paper 14 (P.T.A.B. Feb. 16, 2021).....45

Nichia Corp. v. Document Sec. Sys., Inc.,
No. 2020-2261, 2022 WL 1218036 (Fed. Cir. Apr. 26, 2022).....33

Phillips v. AWH Corp.,
415 F.3d 1303 (Fed. Cir. 2005) 18

PATENT OWNER'S EXHIBIT LIST

Exhibit	Description
2001	Declaration of Todor Cooklev, Ph.D. in Support of Patent Owner's Preliminary Response
2002	Wikimedia Commons, "File: Lucent 5ESS GSM Mobile Switching Centre.jpg" (May 31, 2006) https://commons.wikimedia.org/wiki/File:Lucent_5ESS_GSM_Mobile_Switching_Centre.jpg (June 27, 2023)
2003	Wikipedia, "Mobile switching centre server" https://en.wikipedia.org/wiki/Mobile_switching_centre_server (June 27, 2023)
2004	Techopedia.com, "What is a Base Station Controller?" (Oct. 19, 2011) https://www.techopedia.com/definition/24191/base-station-controller-bsc
2005	Metin UZAR Blog Post, "Base Station Controller (BSC)" (Sept. 19, 2009) https://razunitem.wordpress.com/2009/09/19/base-station-controllerbsc/
2006	Image of Motorola BSC https://monsite.woopic.com/383/p/Telecommunications/img/684d91850fe954cc28a1cf8fce498804.jpg (June 28, 2023)
2007	Electronics-notes.com, "Cellular / Mobile Backhaul" https://www.electronics-notes.com/articles/connectivity/cellular-mobile-phone/mobile-communications-backhaul-link.php (June 28, 2023)
2008	Network Functions Virtualisation - Introductory White Paper (Oct. 2012) https://portal.etsi.org/NFV/NFV_White_Paper.pdf

Exhibit	Description
2009	Dyton, J., “Lemko solutions keep connectivity alive regardless of the circumstances” (July 16, 2020) https://connectedremag.com/das-in-building-wireless/wireless/lemko-solutions-keep-connectivity-alive-regardless-of-the-circumstances/
2010	Lemko.com, distributed Mobile Architecture™ (dMA™) Overview lemko.com/htm/distributed_mesh_architecture.htm (June 28, 2023)
2011	Lemko.com, Lemko’s Fundamental Architecture https://www.lemkocorp.com/solutions/ (June 5, 2023)
2012	GPRS Architecture Presentation (Feb. 18, 1999) http://student.ing-steen.se/datacom/GPRS/architecture.pdf
2013	“What is the Home Location Register (HLR)?” (Feb. 5, 2023) https://www.cyberyodha.org/2023/02/what-is-home-location-register-hlr.html
2014	Silicon Press, Home Location Register (HLR) Technology Brief http://www.silicon-press.com/briefs/brief.hlr/brief.pdf
2015	Melrose Labs, HLR (Home Location Register) - Glossary (2023) https://melroselabs.com/glossary/hlr-home-location-register/
2016	O’Reilly Media, Inc., Packet Data Protocol (PDP) – Excerpt from The IMS: IP Multimedia Concepts and Services (2nd ed. 2006) https://www.oreilly.com/library/view/the-ims-ip/9780470019061/9780470019061_packet_data_protocol_open_parenthesis_pd.html (June 29, 2023)
2017	Microsoft.com, “Developing apps using multiple PDP contexts” (Dec. 14, 2021) https://learn.microsoft.com/en-us/windows-hardware/drivers/mobilebroadband/developing-apps-using-multiple-pdp-contexts
2018	Mpiracle,com Glossary, “PDP Context” https://www.mpirical.com/glossary/pdp-context (June 29, 2023)

Exhibit	Description
2019	Nandhakumar, B., "Dictionary of Computer Networking," Pages 199-200, 286 (1st ed. 2011)
2020	IBM Dictionary of Computing, Page 351 (10th ed. Aug. 1993)
2021	Declaration of Todor Cooklev, Ph.D.in Support of Patent Owner's Response
2022	"Overview of GSM, GPRS, and UMTS," (Dec. 31, 2002) https://docstore.mik.ua/univercd/cc/td/doc/product/wireless/moblwrls/cmx/mmg_sg/cmxgsm.htm
2023	Sanders, G., et al, "GPRS Networks," John Wiley & Sons Ltd., 2003
2024	"The Evolution of Mobile Technologies: 1G, 2G, 3G, 4G LTE," Qualcomm, June 2014
2025	Lin, Yi-Bing, et al., "General Packet Radio Service (GPRS): architecture, interfaces, and deployment," John Wiley & Sons, Ltd., 2001
2026	Transcript for deposition of James Proctor, *Microsoft Corp. and Affirmed Networks, Inc. v. Lemko Corp.*, No. IPR2023-00529, taken on December 6, 2023
2027	Transcript for deposition of James Proctor, *Microsoft Corp. and Affirmed Networks, Inc. v. Lemko Corp.*, No. IPR2023-00531, taken on December 7, 2023
2028	"ETSI TS 123 401, V10.13.0 (2015-01)," European Telecommunications Standards Institute, 2015
2029	"3GPP TS 29.060 V8.1.0 (2007-09)," 3GPP Organizational Partners (ARIB, ATIS, CCSA, ETSI, TTA, TTC), 2007
2030	Excerpts from Tanenbaum, Andrew S. et al., Computer Networks (5th ed. 2011)

I. INTRODUCTION

Lemko's novel distributed mobile architecture ("DMA") introduced a new paradigm for mobile communications networks that was a clear departure from the conventional, hierarchical network architectures that dominated the industry. Conventional legacy networks, such as those in the Flore reference, are based on a centralized hub, such as a mobile switching center (MSC) or Serving GPRS Support Node ("SGSN"), that routes all calls. In contrast, Lemko's claimed decentralized architecture is based on a network of DMA servers (or DMASs) that are connected through peer-to-peer IP connections (instead of through fixed backhaul connections) and that are capable of routing calls to other DMA servers (instead of depending on a centralized MSC or SGSN to route calls). This new mobile architecture, with routing functionality distributed among the DMA servers, enables cellular network coverage to be expanded easily and inexpensively, even over rural communities, where the cost of backhaul to an MSC or SGSN is particularly burdensome. *See* Ex. 1001 ("'988 Patent") at 1:37-2:2, 6:31-62.

To implement its DMA architecture, Lemko's claims contain additional important limitations. For example, a DMA gateway is used to enable communications between multiple DMA server networks or between a DMA server network and a conventional, legacy network. In order to ensure seamless routing of calls between a DMA network and another network, the DMA gateways gather

information about the networks accessible by ***other*** DMA gateways, including a list of the user devices subscribed to each of those networks. That list of user devices is stored in a "home DMA register" that is distributed among the DMA gateways so that each DMA gateway can then route calls to devices served by other DMA gateways, just as if they were served by the first DMA gateway.

The Challenged Claims (1, 3-9, and 20) are not anticipated by Flore. Flore is based on connecting two conventional, legacy networks. Its networks are the same hierarchical, MSC- or SGSN-based networks that Lemko distinguished. Flore does not disclose Lemko's DMA network architecture, DMA servers, DMA gateways, any of the claimed DMA components, or any of the techniques used to ensure that calls are routed properly outside of the DMA. Thus, the Challenged Claims should be confirmed to be patentable.

II. THE '988 PATENT IS BASED ON LEMKO'S NEW DISTRIBUTED-MOBILE-ARCHITECTURE PARADIGM

A. Conventional Cellular Networks Used a Centralized, Hierarchical Network Architecture

A cellular network is a network distributed over areas of land, referred to as cells. Ex. 1006 at 14. At least one transceiver, commonly referred to as a "base transceiver station," or "BTS," provides radio network coverage for user equipment ("UE") within each cell. *Id.* at 24.

Figure 1-30. Cellular design of mobile phone networks.

Ex. 2030 at 66. Multiple BTSs connect to a single Base Station Controller ("BSC"), and multiple BSCs connect to a single mobile switching center ("MSC"). *See* '988 Patent at 1:37-51; Ex. 2021, Declaration of Todor Cooklev, Ph.D. in Support of Patent Owner's Response ("Cooklev Decl."), ¶ 35.

In order to build wireless wide area networks (WWANs) using this technology, carriers like Verizon® and AT&T® established multiple MSCs and built out the BSCs and BTSs necessary to cover a new geographic area. Ex. 2030 at 168. The geographic area covered by these WWANs span entire nations or continents:

Interprocessor distance	Processors located in same	Example
1 m	Square meter	Personal area network
10 m	Room	Local area network
100 m	Building	
1 km	Campus	
10 km	City	Metropolitan area network
100 km	Country	Wide area network
1000 km	Continent	
10,000 km	Planet	The Internet

Figure 1-6. Classification of interconnected processors by scale.

Id. at 18; Cooklev Decl., ¶ 36.

In these conventional cellular WWANs, each BTS is connected to one and only one BSC. Cooklev Decl., ¶ 37. BTSs do not have any ability to route calls, other than to connect to the single BSC. *Id.* Each BSC is connected to one and only one MSC (or SGSN). *Id.* BSCs do not have any ability to route calls beyond forwarding them to the single MSC. *Id.* Expensive backhaul connections connect BSCs to MSCs.[1]

[1] Backhaul connections use T1/E1 communication lines. *See* Ex. 2007 at 2 ("E1/T1 systems were widely used in telecommunications when 2G technologies including GSM were being rolled out and deployed.").

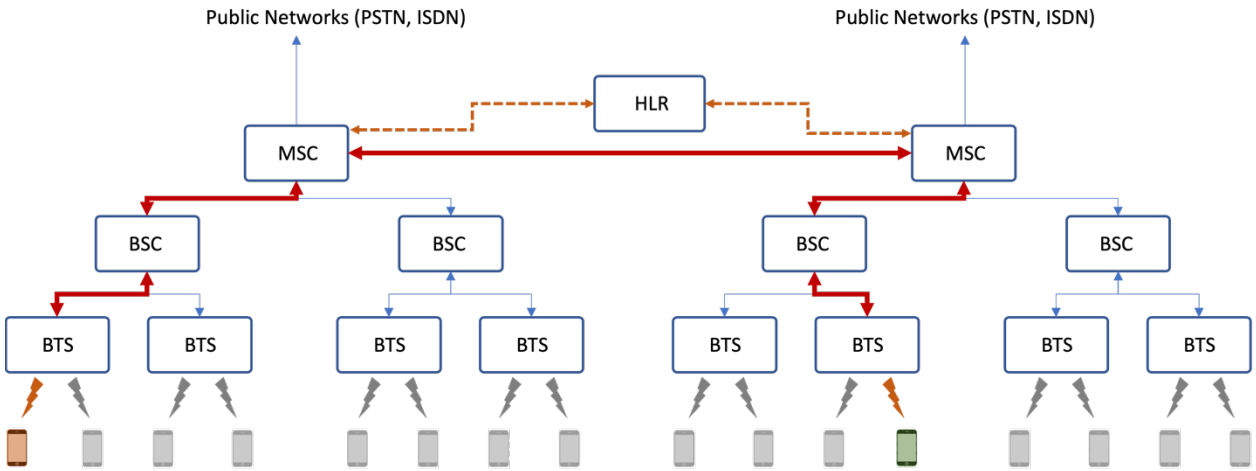

Cooklev Decl., ¶ 37.

Centralized MSCs authenticate callers and route calls to other users (referred to as UEs by convention). Cooklev Decl., ¶ 38 (citing Ex. 2022 at 4-5; Ex. 2023; Ex. 2023 at 25-26 ("There actually is a central database that can give information about the location of a subscriber. This database will always be interrogated when a particular subscriber is called. It is called the home location register (HLR)). When a user (UE shown in orange on the left in the illustration above) wishes to call another user (UE shown in green on the right), the call is routed from a BTS (left) to a BSC (left) to an MSC (left). Cooklev Decl., ¶ 38 (citing Ex. 2022 at 4-5). The MSC polls the carrier's home location register (HLR) and visitor location register (VLR) to determine whether the UE is registered with the MSC's network or whether the UE is visiting (roaming). Cooklev Decl., ¶ 38 (citing Ex. 2014 at 1). After authenticating the UE, the MSC routes the call to another MSC (if the party

being called is another mobile user) or to a public telephony network, like PSTN.). Ex. 1006 at 20-22.

MSCs are large installations housed at server centers and depend on network-card-based hardware.

Ex. 2003; Cooklev Decl., ¶ 39.

The first generation (1G) of cellular network technologies, released between the late 1970s and early 1980s, carried only analog telephony signals. Ex. 2024 at 5, 9; Ex. 2030 at 166-70. These analog systems were soon replaced by second generation (2G) digital telecommunications networks, which introduced limited data services, like SMS text messaging via a packet-switched "general purpose radio service" ("GPRS"). Ex. 2024 at 5, 9; Ex. 2030 at 170-74. While voice phone calls were routed between MSCs over circuit-switched networks to ensure lag-free voice

calls, data signals were routed via the GPRS to packet-switched networks, like the Internet. *See* Ex. 2030 at 67-68; Ex. 1006 at 13.

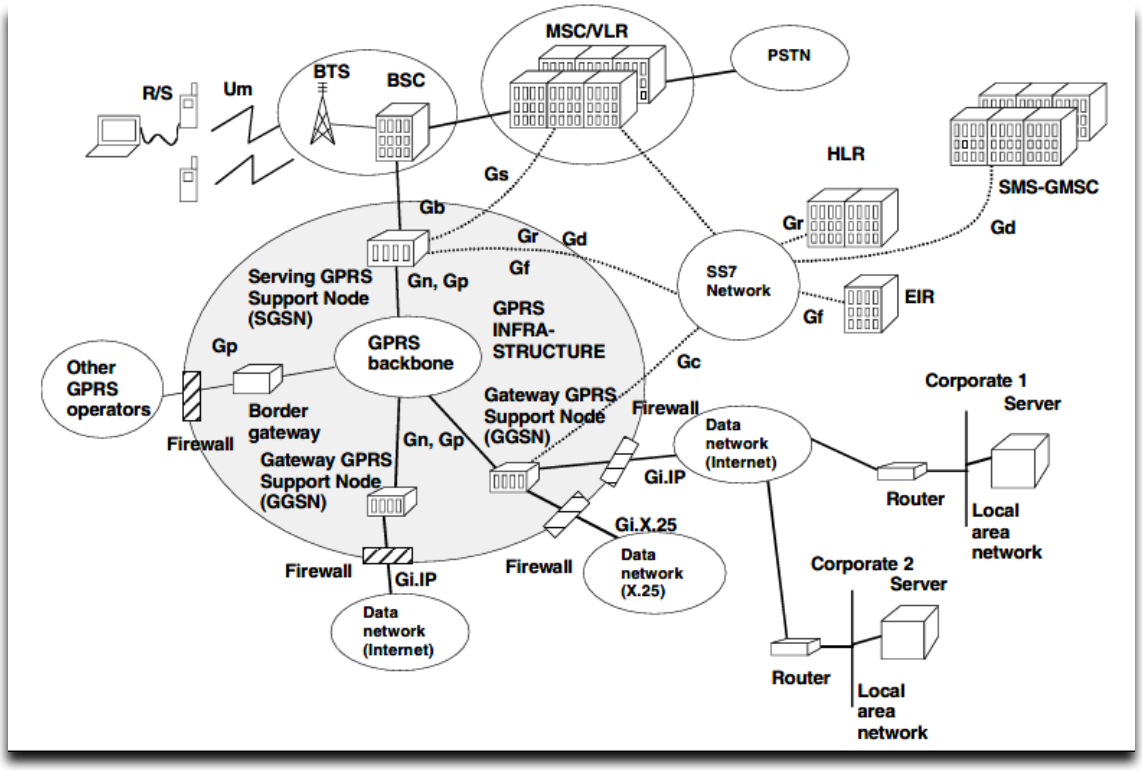

Ex. 2012 at 3 (showing routing of voice and data calls); Cooklev Decl., ¶ 40.

In the GPRS, a Serving GPRS Support Node ("SGSN") performs the role of the MSC. Ex. 2025 at 6; Ex. 2026 ("Proctor Tr. 1") at 21:5-6. Like the MSC, the SGSN receives data from BSCs and routes it, with the help of a Gateway GPRS Support Node ("GGSN"), to the appropriate recipient within the IP network. Ex. 2025 at 1-2, 5-6, 13. The SGSN also responsible for keeping track of which UEs are registered to which BSCs (or Node Bs). *Id.;* Cooklev Decl., ¶ 41.

Expanding cellular network coverage using this hierarchal hub-and-spoke network architecture was very expensive, due in large part to the cost of installing an MSC and connecting new spokes (BTSs/Node Bs) and BSCs/RNCs to a hub (the MSC or SGSN) over backhaul connections.

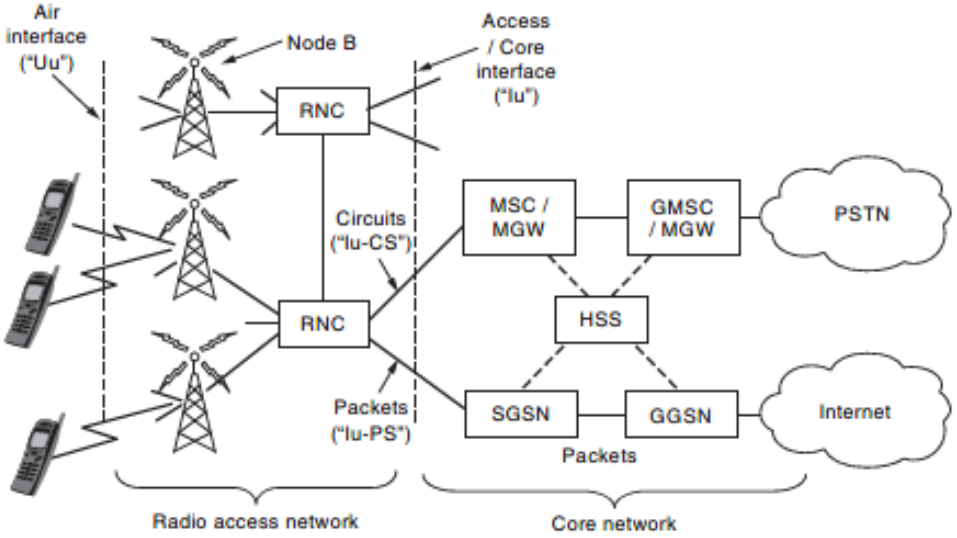

Figure 1-31. Architecture of the UMTS 3G mobile phone network.

Ex. 2030 at 67; Cooklev Decl., ¶ 42. Consequently, telecom companies were slow to expand cellular network service to rural areas, which could not muster the user base necessary to justify the expense of building new cell towers, installing BSCs, and connecting those BSCs to MSCs or SGSNs over expensive backhaul connections. Cooklev Decl., ¶ 42 (citing '988 Patent at 1:37-51).

B. Lemko's Claimed Distributed Mobile Architecture (DMA) Introduced a Distributed Cellular Network Architecture

The '988 Patent discloses and claims a ***distributed*** mobile architecture ("DMA"). In the DMA, "controlling logic can be distributed and de-centralized."

’988 Patent at 6:63-65. Rather than one centralized MSC controlling the routing for a set of BTSs (via intermediary BSCs), the MSC and BSC controlling logic is distributed to each node of the DMA, which are called “DMA servers.” Cooklev Decl., ¶ 43.

Distributing the routing functionality to the DMA servers eliminates the need to carry every call over an expensive backhaul connection to a centralized MSC for switching and routing. Instead, when calls are made between UE located within the same DMA network, calls are routed directly between DMA servers via peer-to-peer connections:

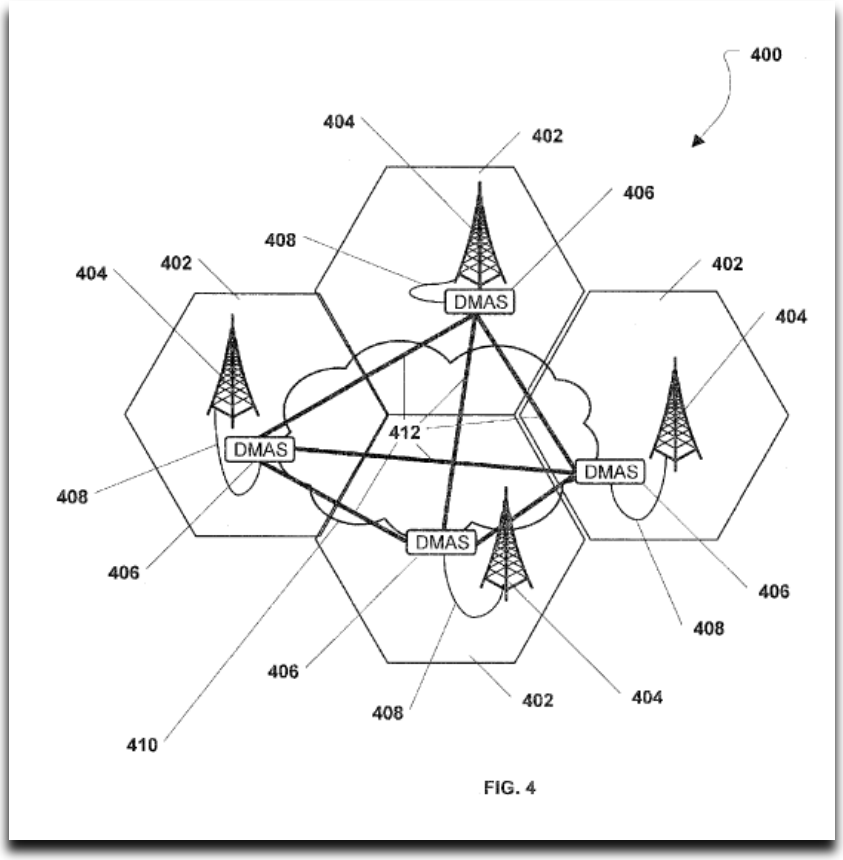

FIG. 4

’988 Patent at Fig. 4, 6:46-49, 6:63-65; Cooklev Decl., ¶ 43. Because the DMA servers route calls between each other, the distributed mobile architecture eliminates the need for expensive centralized hubs and the expensive backhaul connections necessary to connect to those hubs. Ex. 2010 at 1 (“The heart of DMA is an all-IP software solution that contains infrastructure for cellular service” that eliminates a “center or hub”); Cooklev Decl., ¶ 44.

To enable this decentralized architecture, the ’988 Patent teaches implementing the functionality conventionally provided at the MSC and BSC in software located at the DMA servers. *See* ’988 Patent at Abstract, 4:1-19, 9:36-11:27; Cooklev Decl., ¶ 45 (citing Ex. 2010). The DMA servers include a computer-readable medium (light blue) storing an MSC module (red) and a BSC module (green):

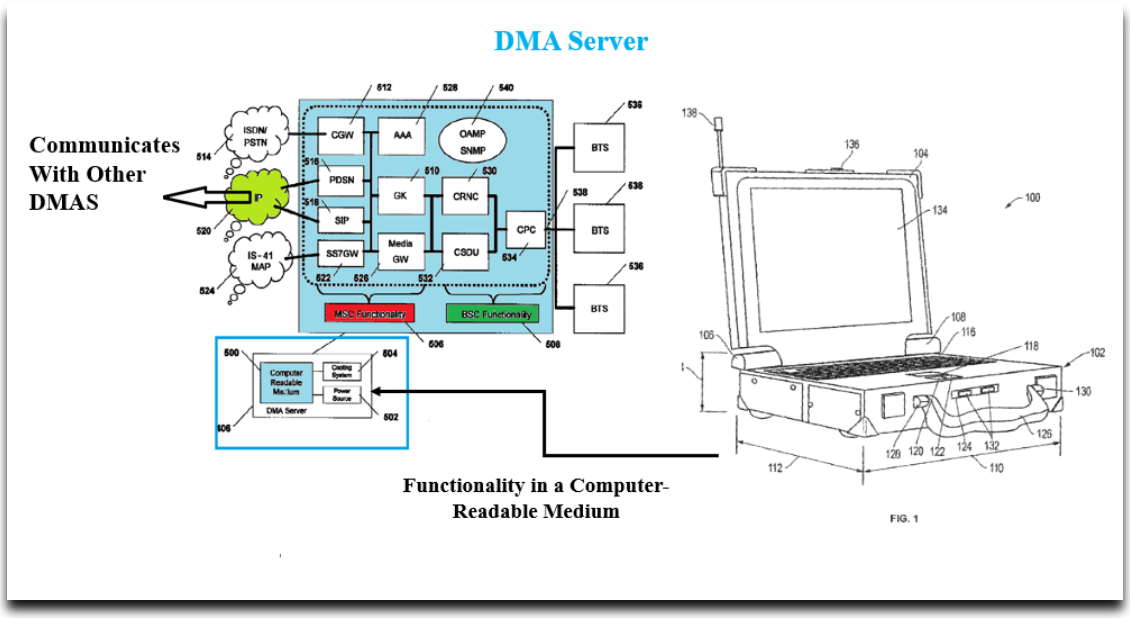

’988 Patent at Figs. 1, 5 (annotated); *see id.* at 7:19-21. The DMA servers are connected to BTSs that provide cellular service to UEs in the area. *Id*. at 6:46-51, Fig. 4; Cooklev Decl., ¶ 45.

The DMA servers route calls amongst themselves via peer-to-peer connections within a private IP network (a virtualized DMA network 410). ’988 Patent at 6:56-58, 9:9-12. Expanding the DMA network only requires connecting a new DMA server to the existing peer-to-peer IP network and connecting the new DMA server to a BTS. *See id.* at 6:31-62, 7:9-12; Cooklev Decl., ¶ 46.

Membership in a particular DMA network might be limited for security, business, or efficiency reasons. A user connected to a DMA network may seek to make a call to a UE that is not part of the same DMA network. For example, the target UE may be connected to a different DMA network or to a conventional, legacy network. Cooklev Decl., ¶ 47. To enable communication of devices serviced by different networks, the ’988 Patent discloses that home location register (“HLR”) and visitor location register (“VLR”) information is exchanged between DMA gateways servicing the different networks. ’988 Patent at 11:10-27, 15:14-23. Particularly, the register information describes devices for which the networks the DMA gateways service are the home network (*i.e.* the HLR register information) as well as devices visiting their networks (*i.e.* the VLR register information). *Id.* at 11:10-27, 14:9-14; Cooklev Decl., ¶ 48 (citing Ex. 2014); Ex. 2027 (“Proctor Tr. 2”)

at 26:1-28:4, 31:12-32:3. In this regard, a DMA gateway accesses the register information to identify what DMA gateway services the target UE to route the communication to that DMA gateway. ’988 Patent at 11:12-19, 15:24-37.

DMA gateways interface a DMA network with another network, such as a different DMA network or a legacy communications network, like the 3G UTRAN and 4G E-UTRAN networks disclosed in Flore. *See id.* at 3:15-26, 9:43-47. The DMA gateways are connected together to form a DMA gateway communications network, which provides bridges between the DMA network and other networks (*e.g.*, a second DMA network) to route communications to and from devices on these different networks. *See id.* at 10:53-66, Claim 5; Ex. 2012 at 3; Cooklev Decl., ¶ 49.

The ’988 Patent provides and claims solutions for routing calls outside of (and between) decentralized DMA networks that lack the centralized hubs, MSCs and the like, found in legacy communications networks. Figure 6 (reproduced below) illustrates how a call from an initiating UE (632) in a first DMA network is routed to a target UE (652) in another DMA network. ’988 Patent at Fig. 6; Cooklev Decl., ¶ 50.

To facilitate communication between these devices, a first DMA gateway (602, shown in red) receives information about “a communications network accessible by a second DMA gateway” (604, shown in green). The first DMA gateway then stores the second DMA gateway’s home register information in the

"home DMA register of the first DMA gateway." *Id*. at 11:10-27, 14:9-11, 15:14-23, Claim 1; Cooklev Decl., ¶ 51.

The second DMA gateway services a DMA network (640, shown in light green) and a legacy communications network (610, shown in orange) such that the served communications information "indicate[s] one or more devices accessible by one of a DMA server [of the DMA network] and a legacy communications network" which are accessible by the second DMA gateway. '988 Patent at Claim 1. And, in this example, the communications information indicates that the target device is accessible by the DMA server (642, shown in blue). Based on this information, the communication is routed to the target device by relaying the communication from the first DMA gateway to the second DMA gateway via a DMA gateway communications network (606, shown in light blue). *See id.* at Abstract, 9:37-40, 15:24-36, Claim 1; Cooklev Decl., ¶ 52.

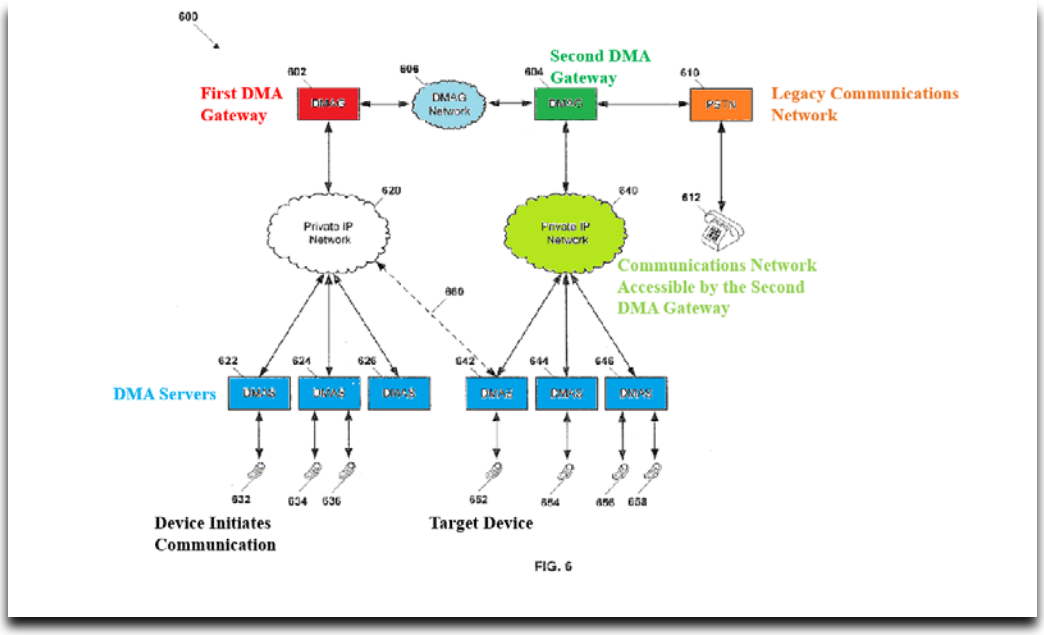

’988 Patent at Fig. 6 (annotated); Cooklev Decl., ¶ 52.

This use of the distributed mobile architecture infrastructure applies both to routing communications from a device serviced by a DMA network to a telephone (612) of the legacy communications network and to a telephone (e.g., 652) serviced by a different DMA network. As noted above, the second DMA gateway (604) provides connectivity to both the DMA network (640) and a legacy communications network (610). Thus, the communications information also identifies devices accessible by the legacy communications network for which a communication is directed to. *See* ’988 Patent at Claim 1; Cooklev Decl., ¶ 53.

III. FLORE DISCLOSES TECHNIQUES FOR HANDOVER OF A UE BETWEEN HIERARCHICAL 4G AND 3G NETWORKS

Flore is directed to providing for handover of UE between two conventional hierarchical networks. In 2006 when Flore was filed, the industry was transitioning

from 3G to the fourth generation (4G) of wireless communications technologies. Ex. 2024 at 28. 4G networks led to more widespread use of IP telephony (*e.g.*, Voice Over IP, or "VoIP"), which carries voice signals over packet-switched networks like the Internet. Cooklev Decl., ¶ 54. Thus, rather than a BSC routing voice calls to an MSC and data signals to an SGSN, a serving gateway ("SGW") routes all signals to a packet data network gateway ("PGW") that connects the UE to an external packet-switched network, as shown in the figure below.

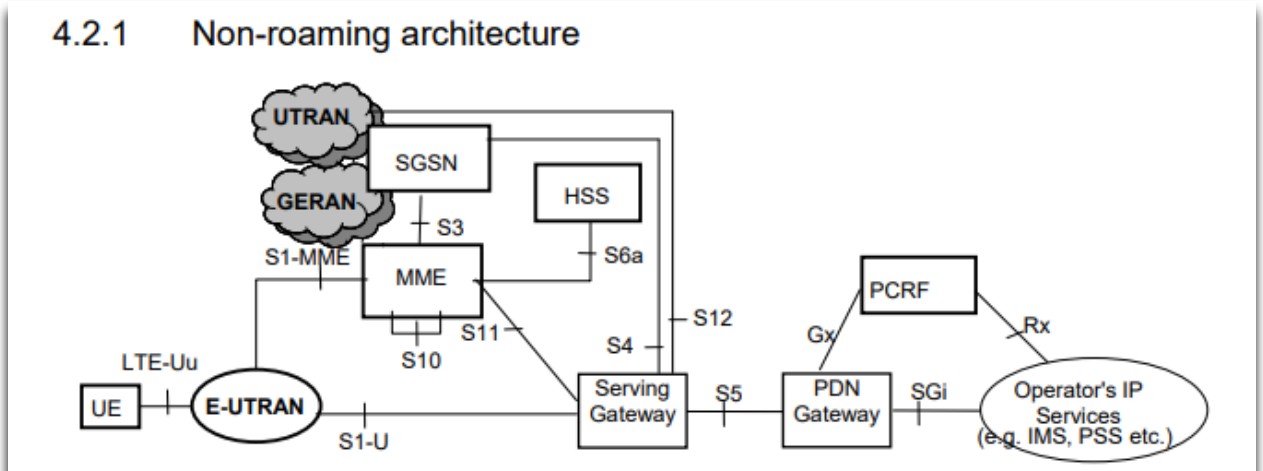

Figure 4.2.1-1: Non-roaming architecture for 3GPP accesses

Ex. 2028 at 16; Cooklev Decl., ¶ 54.

Flore (Ex. 1005) discloses techniques for handing over data service when UE moves between a BTS that supports 4G service (E-Node B) and a cell tower that only supports 3G service (Node B). Cooklev Decl., ¶ 55 (citing Flore at ¶¶ 25-30, 37-39, Figs. 1, 3A-3D). This technique is referred to as an "inter-system handover" because it describes a UE handover process between communications networks

using different radio technologies and protocols. *See generally*, Flore at Abstract, ¶¶ 6, 24-30 (the handover of a UE from a 4G network to a 3G network); Cooklev Decl., ¶ 55.

The 3G and 4G networks that are connected in Flore both rely on the centralized and hierarchical network architecture described in § II.A, *supra*. In the 3G network, a "radio network controller" routes data from the BTS ("Node B") to a radio network controller ("RNC"). The RNC forwards voice calls to an MSC and other data to an SGSN. In the 4G network, an SGW (referred to in Flore as an access gateway ("AGW")) routes all data from the BTS ("E-Node B") to a PGW (referred to in Flore as an "Inter-AS Anchor"):

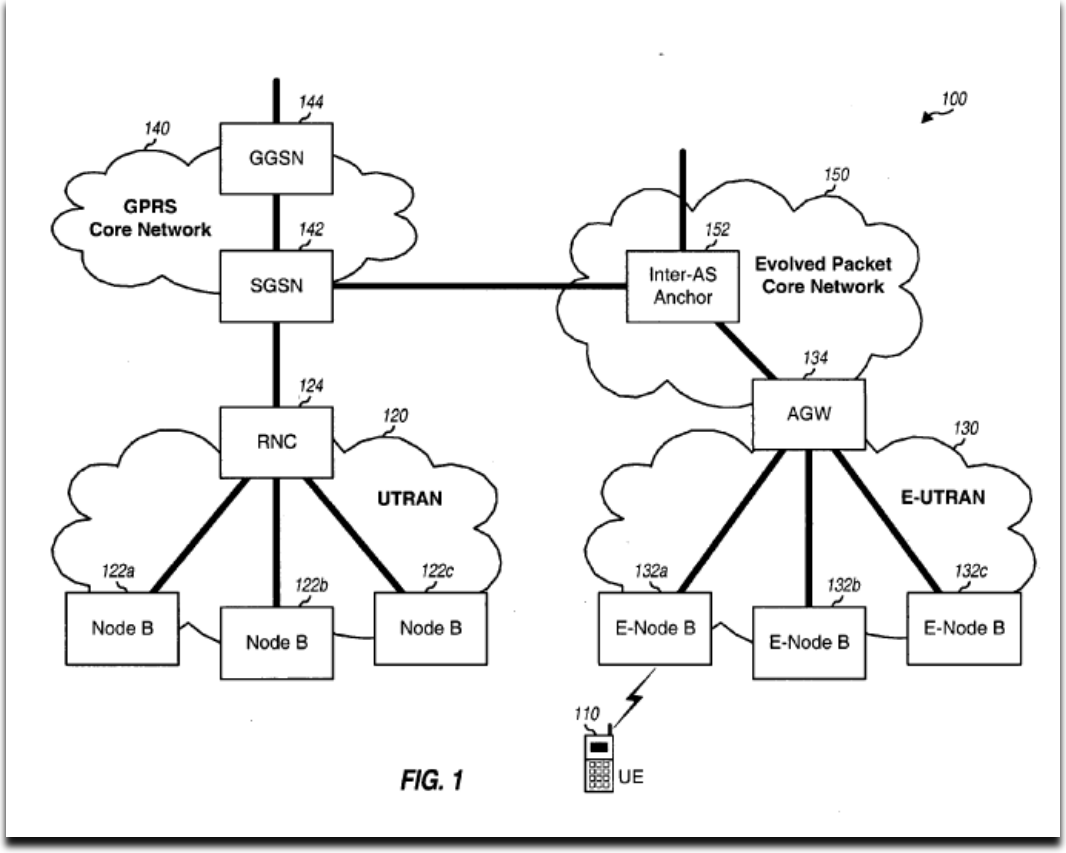

Flore at Fig. 1; Cooklev Decl., ¶ 56.

Because it takes time to roll out the infrastructure necessary to support new technologies, Flore devised a solution to ensure that the new 4G EPC network was compatible with existing 2G/3G GPRS networks:

> A major challenge in development and deployment of a new wireless network is interoperability with existing wireless networks. It is desirable for a wireless user to be able to roam seamlessly between the new wireless network and existing wireless networks. This would allow the user to enjoy the performance advantages of the new wireless network and the coverage benefits of the existing wireless networks.

Flore at ¶ 7. As a UE moves out of the coverage of E-UTRAN (4G) network the UE is handed over to the UTRAN (3G) network. *See* Flore at ¶¶ 36-40, Figs. 3A-3D; Cooklev Decl., ¶ 57.

IV. LEVEL OF ORDINARY SKILL IN THE ART

In the Institution Decision, the Board adopted Petitioners' definition of a person of ordinary skill in the art ("POSITA") as one with "a bachelor's degree in electrical engineering, computer engineering or an equivalent, as well as two years of industry experience related to telecommunications networks . . . . [A]dditional graduate education . . . could substitute for professional experience, or significant experience in the field could substitute for formal education." Paper 8 ("Institution

Decision") at 8-9 (citing Pet. at 3). Lemko applies this definition of a POSITA for its analysis herein. Cooklev Decl., ¶¶ 18-23.

V. CLAIM CONSTRUCTION: DISTRIBUTED MOBILE ARCHITECTURE

Consistent with the intrinsic record, the term "distributed mobile architecture (DMA)" should be construed as:

> (1) a network architecture where DMA servers have distributed call-routing functionality and (2) are connected with other DMA servers through peer-to-peer connections (*i.e.* without connecting through a hierarchical, network-hub architecture), and (3) that is not a legacy communications network.

Cooklev Decl., ¶ 59. This construction is dispositive, as Flore does not satisfy any of these three requirements. *Id.*

A. "Distributed Mobile Architecture (DMA)" is Distributed with Call-Routing Functionality Located on DMA Servers

The term "distributed mobile architecture (DMA)" should be construed consistent with the plain meaning of its words and the inventor's description, which require a mobile architecture with distributed functionality and organization, instead of centralized functionality and hierarchal organization. *Phillips v. AWH Corp.*, 415 F.3d 1303, 1316 (Fed. Cir. 2005) ("The construction that stays true to the claim language and most naturally aligns with the patent's description of the invention will be, in the end, the correct construction") (citation omitted). Accordingly, rather than

routing calls from individual nodes (BTS, Node 1, or Node 1-B) through centralized hubs (MSCs, SGSNs, or AGWs), the distributed mobile architecture shares the task of routing calls among each node (DMA Server) of the DMA network. Cooklev Decl., ¶ 60.

Distributed systems differ from traditional computer networks in that "a collection of independent computers appears to its users as a single coherent system." Ex. 2030 at 2. In concert with this understanding, the '988 Patent consistently uses the term "distributed mobile architecture" to refer to a mobile communications architecture where routing functionality, and the information necessary to route calls, is distributed among DMA servers of a DMA network. Cooklev Decl., ¶ 61 (citing '988 Patent at 6:63-65 ("Within the distributed and associative telecommunications system 400 the controlling logic can be distributed and decentralized.); *see also* '988 Patent at Abstract, 4:1-19, 9:36-11:27, Figs. 1, 5.

It is this distributed nature of the DMA network that allows DMA servers to seamlessly route messages among one another without having to traverse a centralized switching hub, like an MSC or SGSN:

> As illustrated in FIG. 4, ***each DMA server 406 is interconnected with the other DMA servers*** 406 via an Internet protocol network 410. As such, there exists a peer-to-peer connection 412 between each DMA server 406 in the system 400. As described in detail below, the DMA servers 406 can handle telephony traffic that is communicated at each

> antenna 404. For example, ***the DMA servers 406 can switch and route calls received via each antenna 404***. Additionally, the ***DMA servers 406 can hand-off calls to each other as mobile communications devices move around and between the cellular coverage sites*** 402. The DMA servers 406 can communicate with each other via the IP network 410 and can further transmit calls to each other via the IP network 410.

'988 Patent at 6:46-6:62 (emphasis added); Cooklev Decl., ¶ 62.

Driving home the distinction between the claimed DMA and conventional, hierarchal network topologies is that the DMA network is self-healing and redundant:

> Moreover, the wireless coverage provided by the disclosed system 400 is self-healing and redundant. In other words, due to the interconnectivity via the IP network 410, if one or more of the DMA servers 406 loses power, fails, or is otherwise inoperable, telephony traffic handled by the inoperable DMA server 406 can re-routed to one of the remaining operable DMA servers 406. Additionally, user data stored in a database, e.g., a home locator resource (HLR) or a visitor locator resource (VLR), can be distributed equally and fully among all of the DMA servers 406. It can also be appreciated that new cellular coverage sites can be easily added to the system 400 as the demand for users increases. Specifically, a DMA server can be deployed . . . , connected to an antenna, connected to the IP network, and activated to provide cellular coverage in a new area.

'988 Patent at 6:65-7:12; Cooklev Decl., ¶ 63. The distributed nature of the DMA means that there are no centralized points of vulnerability as there are in

conventional hierarchal networks. Cooklev Decl., ¶ 64. The distributed mobile architecture, therefore, is distributed because it has "no center or hub" (like a centralized MSC) because each DMA server routes calls directly to other DMA servers in the DMA network. *Id*. (citing '988 Patent at 6:31-65, 7:32-49, Fig. 4; Ex. 2010; Ex. 2009).

Petitioner's expert agreed that the term's use of "distributed" requires that call routing functionality be distributed among the DMA systems. Proctor Tr. 1 at 74:3-22 (testifying that under a plain and ordinary meaning of "distributed mobile architecture" in light of the specification, "distributed" means that "[t]here needs to be functionality distributed"), *see also id*. at 71:19-72:4 (testifying that "[m]obile architecture … has got to be an architecture that addresses mobile devices" and "distributed means that something has got to be in multiple places"). This further confirms that the correct interpretation of "distributed mobile architecture" requires DMA servers that distribute the call-routing functionality of the DMA network. Cooklev Decl., ¶ 65.

B. Each "DMA Server" is Connected to Other DMA Servers Through Peer-to-Peer Connections

Because the distributed mobile architecture (DMA) is a distributed and decentralized architecture with call-routing functionality on DMA servers, each DMA server is connected to other DMA servers through peer-to-peer connections. '988 Patent at 6:46-49; Cooklev Decl., ¶ 66. The use of such peer-to-peer

connections between DMA servers in the same DMA network stands in contrast to hierarchical legacy networks, where BTSs do not directly connect to each other, instead relying on traversing backhauls to the BSC and MSC to connect to another BTS:

> [E]ach DMA server 406 is interconnected with the other DMA servers 106 via an Internet protocol network 410. As such, there ***exists peer-to-peer connection*** 412 between each DMA server 406 in the system 400."

'988 Patent at 6:46-49 (emphasis added); Cooklev Decl., ¶ 67.

The '988 Patent explains that DMA servers are "able to participate as peers in an IP network 410" when they use "an IP network 410 through which the communications are routed between the DMA servers 406." '988 Patent at 9:9-14 (explaining that a DMA gateway is needed when the DMA servers cannot connect as peers in an IP (DMA) network). Figure 4 (reproduced below) shows the peer-to-peer connections of DMA servers within a DMA network. Importantly, the DMA servers communicate without an intervening MSC.

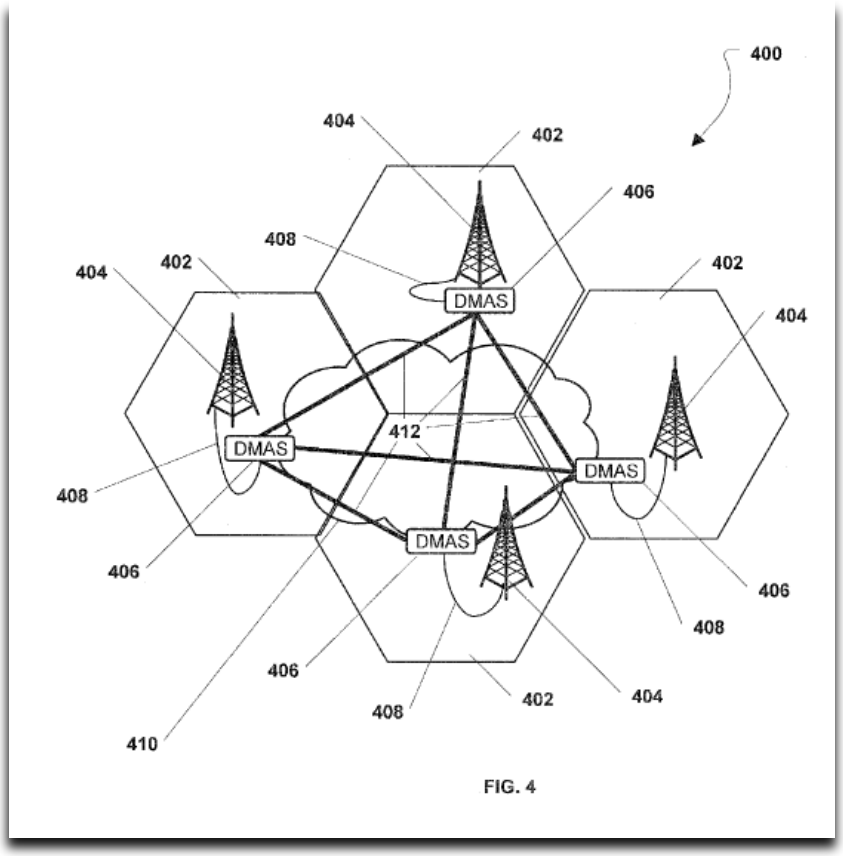

’988 Patent at Fig. 4; Cooklev Decl., ¶ 68.

At institution, the Board noted that the ’988 Patent indicates that “in not all cases will the DMA servers 406 be able to participate as peers in an IP network 410.” Institution Decision at 13 (citing ’988 Patent at 6:31-33, 9:12-14) (quotations omitted). However, the ’988 Patent describes two different scenarios. Where the DMA servers are able to connect as peers with an existing DMA network, they do so. ’988 Patent at 9:9-24. When a new DMA server cannot join an existing DMA network, a DMA gateway connects the new DMA server to the existing DMA

network (and/or one or more legacy networks) via a DMA gateway network. *Id.*; Cooklev Decl., ¶ 69.

Critically, however, that new DMA server is just the initial node in a new DMA network, and any DMA server seeking to join this new DMA network connects to the new DMA server as a peer in the DMA network:

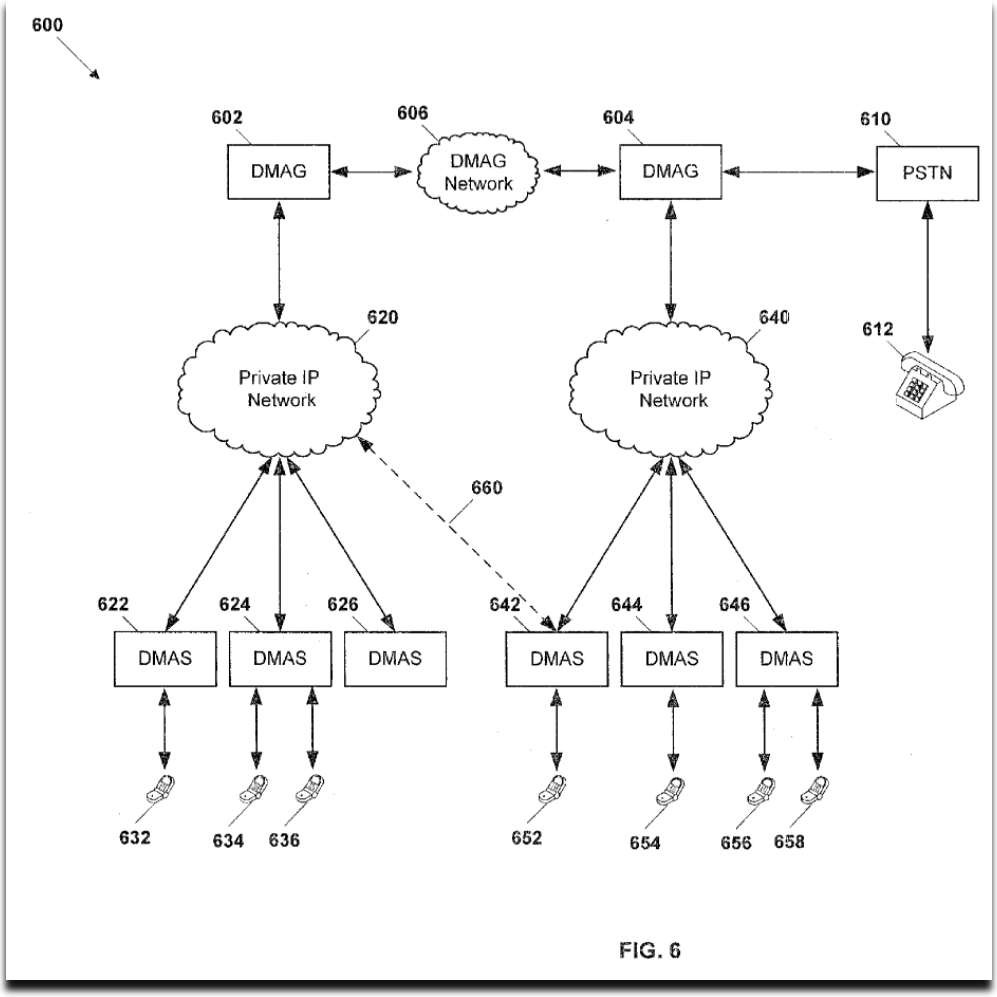

’988 Patent at Fig. 6. Accordingly, if DMAS 622 could not join DMA network 640 as a peer, the ’988 Patent discloses connecting the server to DMA gateway 602 so that it could still communicate with UEs registered with DMA network 640. *Id*. at

9:18-21, 9:36-54. However, DMAS 622 communicates with the *other* DMA servers (DMAS 624 and 626) in the same DMA network via peer-to-peer connections. *Id.* at 6:46-58; Cooklev Decl., ¶¶ 70-71.

These disclosures confirm that the relevant property of a DMA network is that the DMA servers within a DMA network communicate as peers. It does not mean that DMA servers communicate with each other using something other than a peer-to-peer protocol. The use of the DMA gateway to provide additional connections outside of the DMA network does not change this fundamental property that distinguishes DMA servers from conventional BTS and BSC components. Cooklev Decl., ¶ 72.

Accordingly, construing "distributed mobile architecture" as one where DMA servers are connected through peer-to-peer connections to other DMA servers is consistent with all embodiments in the '988 Patent and aligns with the claimed process of routing calls between devices serviced by different networks via the distributed mobile architecture (DMA). Cooklev Decl., ¶ 73.

C. "Distributed Mobile Architecture (DMA)" Networks are Not Legacy Communications Networks

The '988 Patent distinguishes the inventive DMA from a host of different "existing" systems, which the '988 Patent calls "legacy communications network[s]." '988 Patent at 1:37-64, Claim 5. These legacy networks include "existing public switched telephone network (PSTN) services, Voice over Internet

Protocol (VoIP) systems, wireless communications systems, and other systems." *Id*. at 1:55-59; Proctor Tr. 2 at 36:14-37:7. Further examples of "legacy networks" are "a wireless communications network serviced by mobile switching center (MSC)," "a public internet protocol (IP) network," and "an American National Standards Institute 41 (ANSI-41) network." *Id*. at Claim 5. What all of these legacy networks have in common is that they are not private peer-to-peer networks, like the DMA networks of the '988 Patent. Cooklev Decl., ¶ 74.

The claims distinguish distributed mobile architecture (DMA) networks from these legacy communications networks. *See Applied Med. Res. Corp. v. U.S. Surgical Corp.*, 448 F.3d 1324, 1333 n.3 (Fed. Cir. 2006) ("[T]he use of two terms in a claim requires that they connote different meanings") (citation omitted); *CAE Screenplates Inc. v. Heinrich Fiedler GmbH & Co.*, 224 F.3d 1308, 1317 (Fed. Cir. 2000) (expressing that "we must presume that the use of these different terms in the claims connotes different meanings.") (citation omitted). Because the '988 Patent recites both "DMA" and "legacy communications network" in the claims, the use of these two terms requires that they connote different meanings.

For example, every independent claim enumerates a DMA as separate from a legacy communications network. Claim 1 recites "one or more devices accessible by ***one of*** a DMA server and a legacy communications network." '988 Patent at Claim 1 (emphasis added). Claim 22 recites that a DMA gateway includes a "first

interface adapted to communicate with a legacy communications network" and a different "interface adapted to communicate with a DMA gateway communications network." And claims 33 and 42 require communications from a DMA server to a "destination device accessible via a legacy communications network" via a DMA gateway. Thus, every claim distinguishes DMA networks from legacy communications networks. Cooklev Decl., ¶ 75.

The specification further differentiates the two architectures by separating the distributed mobile architecture (DMA) network from the legacy communications network and depicting them as having different components and architecture. Specifically, as shown in Figure 6 (reproduced below), the components of the "DMA" infrastructure (highlighted in the blue box), including DMA servers, DMA gateways, DMA networks, and a DMA gateway communications network, are separated from the legacy communications network (PSTN) and its components (highlighted in the orange box):

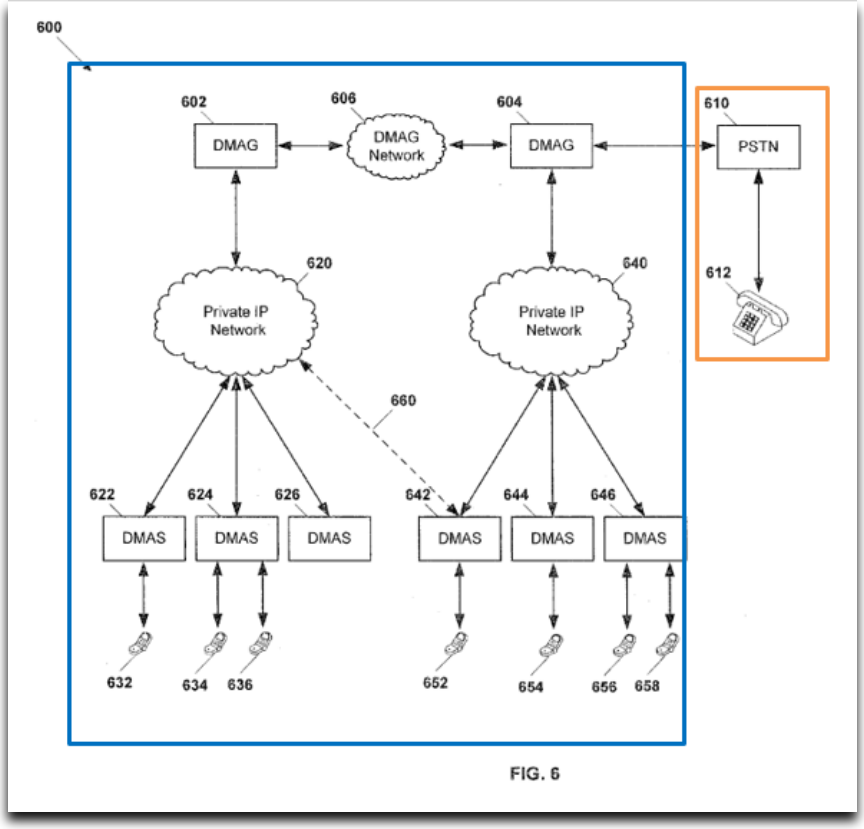

’988 Patent at Fig. 6 (annotated); *see also id.* at 1:55-60 (describing existing PSTN services and wireless communications system); *id*. at Claim 5 (reciting that a legacy communications network includes a “public switched telephone network (PSTN)” or a “wireless communications network serviced by mobile switching center (MSC)” as in Flore). Cooklev Decl., ¶ 76.

Thus, “distributed mobile architecture (DMA)” should be construed to be different from legacy communications networks. Cooklev Decl., ¶ 77.

VI. FLORE DOES NOT ANTICIPATE THE CHALLENGED CLAIMS

Flore does not anticipate the Challenged Claims because it does not disclose a distributed mobile architecture, a DMA server, a DMA gateway, or any of the

claimed techniques for routing calls between a UE subscribed to a DMA server in a first DMA network and a UE subscribed to a different network accessible by a second DMA gateway. Instead, Flore teaches techniques for ensuring interoperability between 4G and 3G/2G networks, which are hierarchical, legacy communications networks, not distributed mobile architectures. Section II.B.

A. Flore Does Not Disclose a "Distributed Mobile Architecture"

As discussed in Section V, "distributed mobile architecture" should be construed as "(1) a network architecture where DMA servers have distributed call-routing functionality and (2) are connected with other DMA servers through peer-to-peer connections, and (3) that is not a legacy communications networks." Flore's networks do not satisfy any aspect of this construction and, therefore, Flore cannot anticipate any of the Challenged Claims. Cooklev Decl., ¶78.

1. Flore Does Not Disclose a Network with Distributed Routing Functionality

Flore's legacy networks are not distributed network architectures where DMA servers have call-routing functionality. Thus, Flore does not disclose the claimed "distributed mobile architecture (DMA)," as correctly construed. Cooklev Decl., ¶ 79.

Petitioners contend that the Flore's RNC and AGW nodes are DMA servers. Pet. at 9-10 (asserting that the "RNC and AGW in Flore serve as the '***distributed mobile architecture (DMA) servers***' of the asserted claims."). However, the RNC

and AGW nodes have no ability to route calls. Cooklev Decl., ¶ 80. Instead, in the GPRS 140 (2G), UTRAN 120 (3G), and Evolved Packet Core Network (4G) networks disclosed in Flore, calls are routed by centralized MSCs, SGSNs, and Inter-AS Anchors, respectively. Pet. at 9-11; *see also id.* at 20 (asserting that the legacy networks are "wireless communications network[s] serviced by a mobile switching center"); Cooklev Decl., ¶ 81.

The figure below depicts the structure of a 2G network, as disclosed in Flore, which is serviced by a centralized MSC (depicted in blue) and receives calls from a BTS (Node B) (depicted in red):

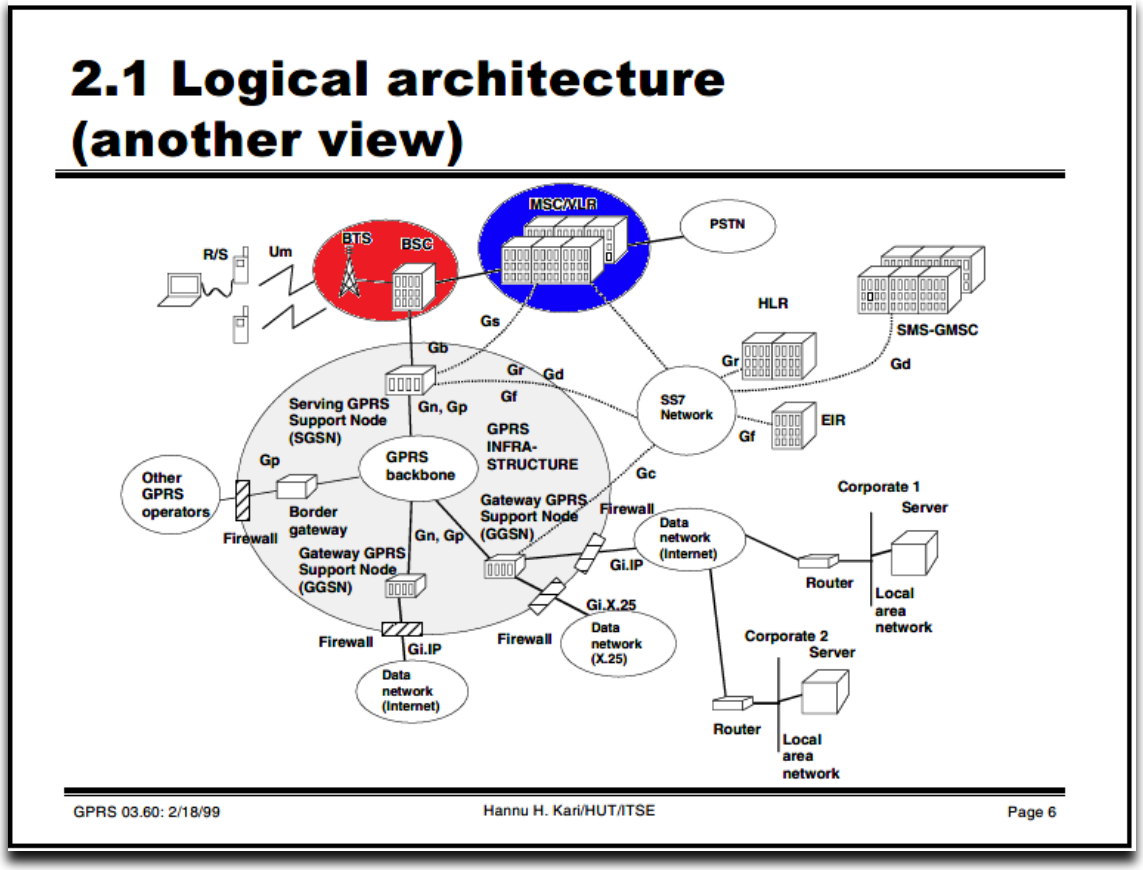

Ex. 2012 at 3 (annotated); *see also* Ex. 1006 at 14, 20-22 (3GPP TS 23.002 standard document describing the networks as serviced by an MSC); Flore at ¶ 30 (describing UTRAN 120 (3G) and GPRS core network 140 (2G) as documented in 3GPP TS 23.002 (Ex. 1006)). Likewise, Flore's 3G and 4G networks rely on centralized hubs. In the 3G UTRAN network, the RNC transfers calls from the BTS (Node B) to a centralized SGSN, while in the 4G E-UTRAN network, the AGW transfers calls from BTS (E-Node B) to the centralized Inter-AS-Anchor. *See* § II.B, *supra* (citing Flore at Fig.1); Cooklev Decl., ¶ 81.

Accordingly, every network disclosed in Flore (i.e., legacy 2G, 3G, and 4G networks) uses communication paths from BTSs to centralized hubs for call routing to target UEs. Cooklev Decl., ¶ 82. Thus, Flore does not disclose a distributed mobile architecture (DMA) network where DMA servers have call-routing functionality. *Id*. at ¶ 83.

2. Flore Does Not Disclose "DMA Servers" Connected Via Peer-to-Peer Connections

Flore does not disclose a DMA network with DMA servers that are connected to other DMA servers through peer-to-peer connections. *See* § V.A, *supra*; Cooklev Decl., ¶ 84. As shown in Petitioners' annotated version of Flore's Fig. 1 reproduced below, the RNC 124 and AGW 134, which Petitioners incorrectly contend are DMA servers, are conventional BSCs that manage multiple BTSs (Node B and E-Node B, respectively) and send calls to an MSC (SGSN and Inter-AS Anchor, respectively).

Both the RNC and AGW lack the ability to communicate with other RNCs or AGWs as peers. Thus, RNC 124 and AGW 134 in Flore are not DMA servers. Cooklev Decl., ¶ 84.

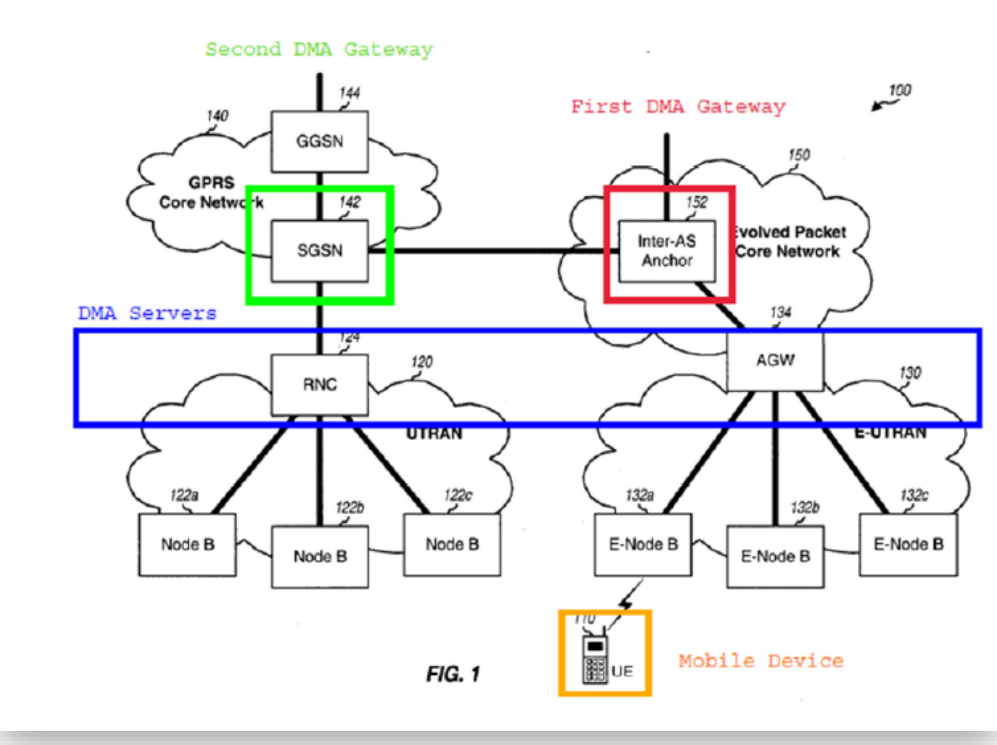

Pet. at 11 (citing Flore at Fig. 1); Cooklev Decl., ¶ 84.

For purposes of the "devices accessible by one of ***a DMA server*** and legacy communication network" limitation, Petitioners shift their allegation and contend

that the "one or more Node Bs" are the DMA servers (not the RNC and AGW).[2] Pet. at 13 ("the UE 110 is accessible by one or more Node Bs and 'legacy networks 120 and 140'"). Petitioners do not explain how conventional "Node Bs" can satisfy the DMA servers limitation. *See id.* Nor could they, as Node Bs are not connected via peer-to-peer connections (and do not have any call-routing capabilities). Cooklev Decl., ¶ 85.

Thus, Flore does not disclose DMA servers when that term is construed to require peer-to-peer connections between DMA servers. Cooklev Decl., ¶ 85.

[2] By shifting their analysis from the "RNC and AWG" to "one or more Node Bs" in Flore, Petitioners fails to "provide an understandable explanation of the element-by-element specifics of its unpatentability contentions, identifying supporting disclosures from the asserted prior art." *Nichia Corp. v. Document Sec. Sys., Inc.*, No. 2020-2261, 2022 WL 1218036, at *4 (Fed. Cir. Apr. 26, 2022) (the challenger "must provide an understandable explanation of the element-by-element specifics of its unpatentability contentions, identifying supporting disclosures from the asserted prior art.") (citing 35 U.S.C. § 312(a)(3)). This is an independent basis to reject Petitioners' ground.

3. Flore's Legacy Networks Are Not a "Distributed Mobile Architecture"

Flore is directed to a method for connecting different legacy networks, such as 2G, 3G, and 4G networks. Outside of its proposed interconnect, Flore does not purport to provide any modification to these underlying networks. Indeed, Petitioners contend that these networks (120 and 140) satisfy the claimed "legacy communications network" limitation and acknowledge that they depend on centralized MSCs for routing. Pet. at 13-14, 20 (characterizing 120 and 140 as "legacy networks" serviced by centralized MSCs); Cooklev Decl., ¶ 86; *see also* § VI.A.3 *supra*.

Because distributed mobile architecture should be construed as exclusive of legacy networks, this is an independent basis to find that Flore does not disclose the DMA limitations. *See* § V.C, *supra* (establishing that the term "DMA" excludes "legacy communications network" as in Flore). Cooklev Decl., ¶ 87.

B. Flore Does Not Disclose a "DMA Gateway Communications Network"

Flore also does not anticipate the Challenged Claims because it does not disclose a "DMA gateway communications network." The DMA gateway communications network is a ***network*** that connects DMA gateways in order for them to communicate amongst one another. *See* '988 Patent at 3:10-14 ("The communication is routed from the first DMA gateway to the target device by

relaying the communication from the first DMA gateway to the second DMA gateway ***via the DMA gateway communications network***.") (emphasis added); Cooklev Decl., ¶ 88.

In the Petition, Petitioners identified the Gn interface as the "gateway communications network." Pet. at 22 ("The Update PDP Context Response message is sent across the Gn interface, ***which is a 'gateway communications network***.'") (emphasis added). At institution, the Board stated that "Petitioner[s have] not contended that a Gn interface is a network" and asserted that Petitioners only identified that the SGSN 142 and Inter-AS Anchor 152 communicate "via a Gn interface." Institution Decision at 28. However, the claims require that a "network" be used to connect the DMA gateways. Thus, Petitioners have not identified any ***network*** in Flore used to connect the DMA gateways. Moreover, the Gn interface is part of the conventional network architectures that are different from the claimed distributed mobile architecture network. Flore at ¶ 29 ("The use of the Gn interface allows SGSN 142 to communicate with Inter-AS Anchor 152 in the same manner as with another SGSN, which minimizes the impact to ***legacy networks 120 and 140***") (emphasis added). Therefore, Flore does not disclose a DMA gateway network. Cooklev Decl., ¶¶ 89-91.

C. Flore Does Not Disclose "Communications Information for a Communications Network Accessible by a Second DMA Gateway"

The Challenged Claims require communications information for a communications network accessible by a second DMA gateway that is (1) received at a first DMA gateway, (2) indicates one or more devices accessible by one of a DMA server and a legacy communications network, (3) is stored in a home DMA register of a first DMA gateway, and (4) indicates a target device to be served by a second DMA gateway. '988 Patent at Claim 1; Cooklev Decl., ¶ 92.

Flore does not anticipate the Challenged Claims because its PDP context is not "communications information for a communications network accessible by a second DMA gateway," and is not stored in a first DMA gateway's home register. *See* Pet. at 13 (alleging that "the PDP context disclosed in Flore qualifies as 'communications information'"); Cooklev Decl., ¶ 93.

1. Flore's PDP Context Does Not Identify any Network Accessible by a Second Gateway

A PDP context "contains various parameters such as routing information for IP packets." Pet. at 12. There is nothing in a PDP context that identifies any network ***accessible by*** a second gateway. At most, the PDP context identifies what Petitioners contend is the second DMA gateway (*i.e.* SGSN 142), so that when a UE moves from a 4G enabled cell site to a 3G cell site, "future packets for the UE are forwarded to SGSN 142 instead of AGW 134." Pet. at 12-13. No information about

any networks accessible by SGSN 142 is contained in this PDP context. Thus, Flore does not disclose "receiving a communication at the first DMA gateway for a target device ***indicated by the communications information to be served by the second DMA gateway***." Cooklev Decl., ¶ 94.

2. Flore's PDP Context Does Not Identify a Device "Accessible by One of a DMA Server and a Legacy Communications Network" Via the Second DMA Gateway

Flore's PDP context is sent ***before*** the UE is handed over to the new communications network. Pet. at 13; Flore at ¶ 46 (sending the PDP context at step 11). At the time the PDP context is sent, the UE is still subscribed to the first network's AGW 134, and cannot be accessed by SGSN 142, which Petitioners contend is the second DMA gateway. Pet. at 11, 12-13; *see also* Flore at Fig. 7 and ¶ 46. Particularly, in Figure 7 of Flore, PDP context messages are exchanged with the second network entity to handover the UE (at step 718), but not until after the handover is complete is the UE accessible by the SSGN (at step 724). *See* Flore at Fig. 7; *see also id.* at ¶¶ 57-58. Accordingly, the UE that is the subject of the PDP context is not a device identified as "accessible by one of a DMA server and a legacy communications network" via the second DMA gateway. Cooklev Decl., ¶¶ 95-96.

3. Flore Does Not Disclose Storing the Communications Information in a Home DMA Register of the First DMA Gateway

Flore's PDP context is not "communications information" that is stored in "a home DMA register of the first DMA gateway." *See* '988 Patent at Claim 1 ("storing the communications information in a home DMA register of the first DMA gateway"). The PDP context is stored at the GGSN register, as Petitioners acknowledge. Pet. at 15-16. Flore's GGSN location register is not the claimed "home DMA register." Cooklev Decl., ¶ 97.

According to the '988 Patent, the "home DMA register" stores "communications information," which indicates devices serviced by networks accessible by the second DMA gateway. '988 Patent at 3:4-7, 11:10-27, 15:14-28. More specifically, the '988 Patent discloses that the "communications information" includes "register information, such as home location register (HLR) information" stored in the home DMA register. *Id.* at 15:14-16; *see also id.* at 15:14-28, 14:9-11 (this type of register information "describes devices for which the networks they [DMA gateways] service are the home network."). This corresponds to the functionality provided by a home location register (HLR) in a legacy network, as the '988 Patent explains, although, in the network of the '988 Patent, the information is distributed to and stored at a DMA server or DMA gateway (unlike in legacy

networks, where it is stored at the MSC/SGSN). Cooklev Decl., ¶ 98-99 (citing '988 Patent at 15:14-18; Ex. 2022 at 10-11; Ex. 2012 at 3; Ex. 2014 at 1).

This GGSN register is not store a home DMA register because it does not store location register information for its own network *or* any other networks. Indeed, unlike the home DMA register of the DMA gateway, which stores the HLR information for the network served by the DMA gateway *and* communications information for UEs served by another DMA gateway (up to and including their HLRs), the PDP context stored at the GGSN does not even store location information. The only information stored in the GGSN is the address of the UE and the address of the SGSN that serves it. Ex. 1006 at 13-14 (the GGSN "stores subscription information and routeing [sic] information (needed to tunnel packet data traffic destined for a GPRS MS to the SGSN)"). Accordingly, Flore does not disclose that the HLR functionality is also located at the GGSN location register. Cooklev Decl., ¶ 100 (citing '988 Patent at 14:9-11, 15:14-28; Ex. 2016 at 1; Ex. 2017).

Petitioners also assert that a POSITA would understand that a PDP context field is a "home DMA register" because it "necessarily has a list of entries for the UEs it serves, such as UE 110." Pet. at 16-17. But the home DMA register, and HLRs more generally, include more than a "list of entries for the UEs it serves." Cooklev Decl., ¶ 101. HLRs, and the home DMA register, store "location"

information for the subscribers it serves, not just their identities. On the contrary, "PDP context fields" are stored in the GGSN which, as described above, are categorically different than the location information stored in an HLR/home DMA register. Ex. 1006 at 13-14 (disclosing that the "GGSN has at least one PDP context active."). This is a further reason a POSITA would not find the reference to PDP context fields to disclose a "home DMA register." Cooklev Decl., ¶ 102.

Petitioners do not (and cannot) show that the alleged second DMA server serves the PDP context and that the PDP context is "communications information" stored in a home DMA register, as required by the Challenged Claims. Thus, Petitioners fail to demonstrate that Flore anticipates the Challenged Claims.

D. FLORE FAILS TO DISCLOSE THE ADDITIONAL LIMITATIONS RECITED IN THE DEPENDENT CLAIMS

Because Petitioners fail to show that Flore anticipates independent Claim 1, Petitioners also fail to establish by a preponderance of the evidence that the other Challenged Claims, which depend from Claim 1, are unpatentable. In addition, Flore fails to disclose additional limitations recited in the dependent Challenged Claims.

1. Dependent Claim 7: Flore Does Not Disclose "the First DMA Gateway Automatically Sending at Least a Portion of the Communications Information to the Second DMA Gateway via the Gateway Communications Network"

Flore does not disclose "the first DMA gateway automatically sending at least a portion of the communications information to the second DMA gateway via the

gateway communications network," as recited by Claim 7. For this limitation, Petitioners allege that an "Update PDP Context Response message" as forwarded from the alleged first DMA gateway to the alleged second DMA gateway contains portions of the communications information. Pet. at 21. This allegation is wrong. Cooklev Decl., ¶ 104.

The claimed "communications information" indicates "one or more devices accessible by one of a DMA server and a legacy communications network" via the second DMA gateway. *See* '988 Patent at Claim 1. As established above, PDP context messages are sent ***before*** the handover is complete, therefore it does not identify a UE device accessible via alleged second DMA gateway. *See* § VI.C.2, *supra*. Additionally, none of the elements in the Update PDP Context Response message indicates the UE device, let alone one accessible via the alleged second DMA gateway. *See* Ex. 2029 at 33 (depicting the information elements in an Update PDP Context Response message); Cooklev Decl., ¶ 105.

For at least these reasons, Flore does not anticipate Dependent Claim 7. Cooklev Decl., ¶ 106.

2. Dependent Claim 8: Flore Does Not Disclose "In Response to Receiving a Query from the Second DMA Gateway for the Communications Information, the First DMA Gateway Sending at Least a Portion of the Communications Information to the Second DMA Gateway via the Gateway Communications Network

For the same reasons as those advanced in Section VI.D.1, Flore does not anticipate "in response to receiving a query from the second DMA gateway for the communications information, the first DMA gateway sending at least a portion of the communications information to the second DMA gateway via the gateway communications network." Cooklev Decl., ¶ 107.

3. Dependent Claim 9: Flore Does Not Disclose "Communications Register Data Including at Least one of . . . a Portion of the Home Location Register (HLR) Data for the Communications Network"

Flore's PDP context also does not include "communications register data including at least one of . . . a portion of home location register (HLR) data for the communications network," as required by Claim 9. '988 Patent at Claim 9; Cooklev Decl., ¶ 108.

Petitioners assert that the PDP context "contains information such as the IP address of the Inter-AS-Anchor" which is "a portion of the Home Location Register (HLR) data." Pet. at 23. For support, Petitioners rely on the 3GPP TS 23.0002, V7.1.0 standard document, which provides that "the Home Location (HLR) is the location register to which a mobile subscriber is assigned for record purposes such

as subscriber information." *Id.* (citing Ex. 1006 at 13) (quotations omitted); Cooklev Decl., ¶ 109.

But this does not support Petitioners' proposition. While the HLR stores home location register data of a subscriber, ***it does not store the PDP context***. Rather, the PDP context is stored in the GGSN location register, which provides the information for exchanging packets between the UE and the network, as described above. Ex. 1006 at 13-14 (the GGSN location register store the "subscription information and routeing [sic] information (needed to tunnel packet data traffic . . . for which the GGSN has at least one PDP context active"); Ex. 2016 at 1 (explaining that the PDP context "offers a packet data connection over which the UE and the network can exchange packets."). Because the PDP context is stored in the GGSN location register, not the HLR, the PDP context does not contain information that is part of "a portion of home location register (HLR) data for the communications network." '988 Patent at Claim 9; Cooklev Decl., ¶ 110. Thus, Flore cannot anticipate Claim 9. *Id.* at ¶ 111.

4. Dependent Claim 20: Flore Does Not Disclose that "the First DMA Gateway Receives the Communications Information From the Second DMA Gateway"

Claim 20 requires that "the first DMA gateway receives the communications information from the second DMA gateway." '988 Patent at Claim 20. Throughout the Petition, Petitioners contend that Inter-AS Anchor 152 (the alleged "first DMA

gateway") receives the PDP context from AGW 134 and then "forwards the information" to the SGSN 142 (the alleged "second DMA gateway"). *See* Pet. at 12-13 (alleging that for Claim 1, the "AGW 134 sends a 'PDP context' to Inter-AS Anchor 152"); *id*. at 13 ("the PDP context disclosed in Flore qualifies as communications information"); *id*. at 21-22 (alleging that for Claims 6-8, AGW 134 stores and forwards the PDP context to Inter-AS Anchor 152 which "then 'forwards the information in an Update PDP Context Response message to SGSN 142' (the 'second DMA gateway')."). By Inter-AS Anchor receiving the PDP context from AGW 134 and then forwarding the information to SGSN 142, Petitioners advance a theory in which the ***alleged second DMA gateway*** receives the alleged communications information from ***the alleged second DMA***. Cooklev Decl., ¶ 112.

For purposes of Claim 20 only, however, Petitioners turn that theory on its head. Pet. at 24. Specifically, Petitioners contend that SGSN 142 provides the PDP context message to Inter-AS Anchor 152 to facilitate handovers from the UTRAN to the E-UTRAN, not the other way around as Petitioners contended for the other Challenged Claims. *Compare id.* (for Claim 20, facilitating handovers from the UTRAN to the E-UTRAN) *with id.* at 13-14 (contending that the PDP context message is meant to facilitate handover from the E-UTRAN 130 to the UTRAN 120 and GPRS core network 140); Cooklev Decl., ¶ 113. Petitioners cannot shift their position here while also maintaining their original position to facially satisfy the

other claims. *See, e.g.*, *Lego Sys., Inc. v. MQ Gaming LLC*, No. IPR2020-01446, Paper 14 at 14-15 (P.T.A.B. Feb. 16, 2021) (denying institution based in part on Petitioner's "internally inconsistent" position which "relies on lighting effects as the 'one or more physical effects' in one part of its analysis for claim 1, but later in another part of the analysis Petitioner switches to relying on the speech and sound effects of Stamper for the same element").

Thus, Petitioners have failed to show that Flore discloses "the first DMA gateway receives the communications information from the second DMA Gateway." Cooklev Decl., ¶ 114.

VII. CONCLUSION

For all of these reasons, the Challenged Claims of the '988 Patent are patentable over Flore.

Respectfully submitted,

Dated: December 21, 2023

/James Hannah/

James Hannah (Reg. No. 56,369)
Jenna Fuller (Reg. No. 74,212)
Kramer Levin Naftalis & Frankel LLP
333 Twin Dolphin Drive, Suite 700
Redwood Shores, CA 94065
Telephone: (650) 752-1700
Facsimile: (650) 752-1800
jhannah@kramerlevin.com
jfuller@kramerlevin.com

Aaron M. Frankel (Reg. No. 52,913)

Jeffrey H. Price (Reg. No. 69,141)
Jeffrey Eng (Reg. 63,189)
Kramer Levin Naftalis & Frankel LLP
1177 Avenue of the Americas
New York, NY 10036
Telephone: (212) 715-7502
Facsimile: (212) 715-8302
afrankel@kramerlevin.com
jprice@kramerlevin.com
jeng@kramerlevin.com

Attorneys for Patent Owner
Lemko Corporation

CERTIFICATE OF COMPLIANCE WITH 37 C.F.R. § 42.24

The undersigned hereby certifies that the portions of the above-captioned **PATENT OWNER'S RESPONSE** specified in 37 C.F.R. § 42.24 has 8,197 words in compliance with the 14,000 word limit set forth in 37 C.F.R. § 42.24(b)(2). This word count was prepared using the Microsoft Word word-processing system used to prepare this paper.

Dated: December 21, 2023

/James Hannah/

James Hannah (Reg. No. 56,369)
Jenna Fuller (Reg. No. 74,212)
Kramer Levin Naftalis & Frankel LLP
333 Twin Dolphin Drive, Suite 700
Redwood Shores, CA 94065
Telephone: (650) 752-1700
Facsimile: (650) 752-1800
jhannah@kramerlevin.com
jfuller@kramerlevin.com

Aaron M. Frankel (Reg. No. 52,913)
Jeffrey H. Price (Reg. No. 69,141)
Jeffrey Eng (Reg. 63,189)
Kramer Levin Naftalis & Frankel LLP
1177 Avenue of the Americas
New York, NY 10036
Telephone: (212) 715-7502
Facsimile: (212) 715-8302
afrankel@kramerlevin.com
jprice@kramerlevin.com
jeng@kramerlevin.com

Attorneys for Patent Owner
Lemko Corporation

CERTIFICATE OF SERVICE

The undersigned certifies, in accordance with 37 C.F.R. § 42.6(e), and pursuant to agreement by the parties that filing with the Board through the Patent Trial and Appeal Case Tracking System (P-TACTS) constitutes electronic service, that service was made on the Petitioners as detailed below.

Date of service	December 21, 2023
Manner of service	Electronic Filing (rkang@winston.com bshelton@winston.com; Winston-MSFT-Lemko-IPR@winston.com)
Documents served	PATENT OWNER'S RESPONSE
Persons Served	WINSTON & STRAWN LLP Robert N. Kang Barry K. Shelton

/James Hannah/
James Hannah
Registration No. 56,369
Lead Counsel for Patent Owner