Trials@uspto.gov
571.272.7822

Paper 8
Date: September 25, 2023

UNITED STATES PATENT AND TRADEMARK OFFICE

BEFORE THE PATENT TRIAL AND APPEAL BOARD

MICROSOFT CORPORATION and AFFIRMED NETWORKS, INC.,
Petitioner,

v.

LEMKO CORPORATION,
Patent Owner.

IPR2023-00530
Patent 7,548,763 B2

Before HUBERT C. LORIN, NEIL T. POWELL, and
FRANCES L. IPPOLITO, *Administrative Patent Judges*.

LORIN, *Administrative Patent Judge*.

DECISION
Denying Institution of *Inter Partes* Review
35 U.S.C. § 314

I. INTRODUCTION

A. Background

Microsoft Corporation and Affirmed Networks, Inc. (collectively, "Petitioner") filed a Petition (Paper 3, "Pet.") requesting *inter partes* review of claims 1, 4, 6, 9, and 15 of U.S. Patent No. 7,548,763 B2 (Ex. 1001, "the '763 patent"). Lemko Corporation ("Patent Owner") filed a Preliminary Response (Paper 7, "Prelim. Resp.").

We have authority under 35 U.S.C. § 314, which provides that an *inter partes* review may not be instituted unless the information presented in the Petition and the Preliminary Response shows that "there is a reasonable likelihood that the petitioner would prevail with respect to at least 1 of the claims challenged in the petition." 35 U.S.C. § 314(a) (2018).

After considering the Petition, the Preliminary Response, and the evidence of record, we deny Petitioner's request to institute an *inter partes* review as to the challenged claims of the '763 patent on the grounds of unpatentability presented.

B. Related Proceeding

Petitioner indicates, and Patent Owner agrees, that the '763 patent was asserted in *Lemko Corporation v. Microsoft Corporation*, No. 3:22-cv-00363 (N.D. Tex.). Pet. 39; Paper 4, 1.

C. Real Parties in Interest

Petitioner identifies "Petitioners" as real parties in interest. Pet. 39. Patent Owner identifies "Lemko Corp." as the real party in interest. Paper 4, 1.

D. The ’763 patent (Ex. 1001)

1. Disclosure

The ’763 patent, titled “System, Method, and Device for Providing Communication Using a Distributed Mobile Architecture,” relates to distributed mobile communication systems, specifically, for providing telephone communications in a group call between several participants. Ex. 1001, code (54), 1:7–8, 2:38–40.

The ’763 patent explains that “[c]urrent telephone systems are expensive to deploy,” for example, where “a typical cellular system that includes a mobile switching center (MSC), a base station controller (BSC), and a home location register/visitor location register (HLR/VLR) can cost over $2.0 million” and “may require a minimum of ten thousand users in order to be economically viable.” Ex. 1001, 1:34–40. The ’763 patent recognizes that “[i]n many rural areas, the population is not large enough to support the installation of such a system.” *Id.* at 1:40–41.

The ’763 patent proposes a distributed and associative telecommunications system with a distributed and decentralized controlling logic. Ex. 1001, 3:51–53. An exemplary system is depicted in Figure 1, reproduced below.

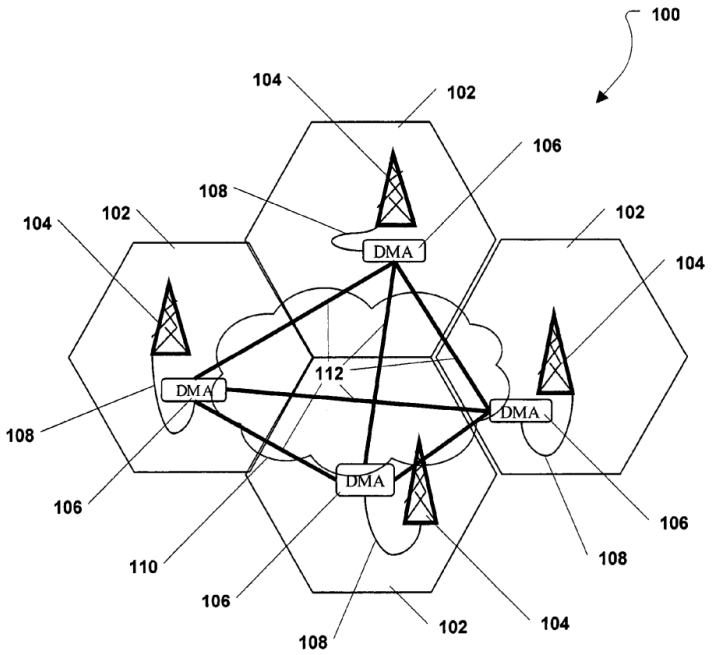

FIG. 1

Figure 1 of the '763 patent shows distributive and associated telecommunications system 100.

As shown in Figure 1, system 100 includes multiple coverage sites 102, each having an antenna 104 that "is connected to a transceiver belonging to a base transceiver station (BTS)." Ex. 1001, 3:24–28. Each antenna 104 can also be connected to a distributed mobile architecture (DMA) server 106 that "is physically and directly connected to its respective antenna 104." *Id.* at 3:29–33. The DMA servers are connected to each other via Internet Protocol network 110 such that "there exists a peer-to-peer connection 112 between each DMA server 106 in the system 100." *Id.* at 3:34–37.

Fig. 2 depicts a DMA server, and is reproduced below.

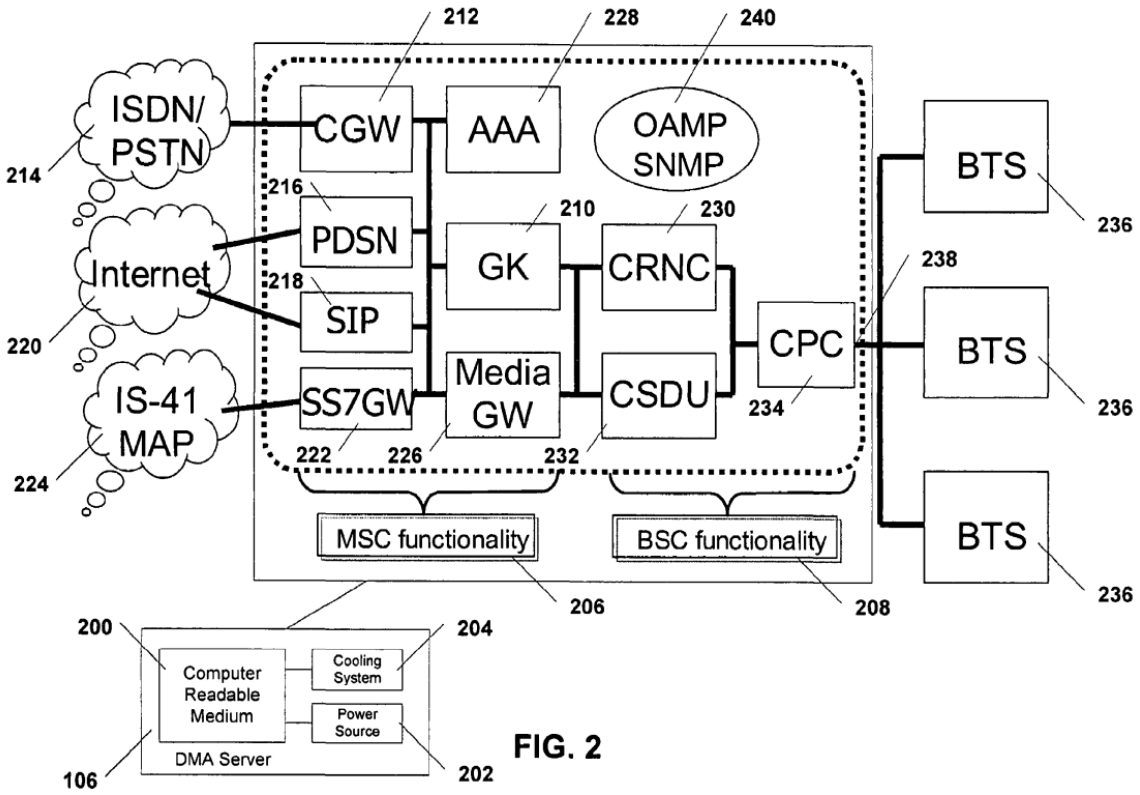

FIG. 2

Figure 2 of the ’763 patent is a block diagram of a DMA server 106 comprising computer readable medium 200.

As shown in Figure 2, DMA server 106 can include both “a mobile switching center (MSC) module 206 and a base station controller (BSC) module 208 embedded within the computer readable medium 200.” Ex. 1001, 4:14–17. In operation, if a received call is between two mobile communication devices within the same cellular coverage site, DMA server 106 may switch the call locally. *See id.* at 5:49–64. If a received call is not local, DMA server 106 may connect the call from the mobile communication device that initiated the call to another mobile communication device via a peer-to-peer connection with another DMA

server. *See id.* at 5:65–6:4. "[G]roup calling is allowed between all participants with full duplex capability." *Id.* at 7:14–18.

2. Claims 1, 4, 6, 9, and 15

Petitioner challenges claims 1, 4, 6, 9, and 15. Pet. 1.

Claim 1 is the sole independent claim from which claims 4, 6, 9, and 15 depend and is reproduced below. Consistent with the Petition, bracketing is added to assist in referring to the claim elements. Pet. 9–23.

1.[a] A system, comprising:

[b] a first distributed mobile architecture server comprising:

[c] a first computer readable medium;

[d] a first mobile switching center module embedded in the first computer readable medium;

[e] a first base station controller module embedded in the first computer readable medium; and

[f] a first call detail record (CDR) generation program embedded in the first computer readable medium,

[g] wherein the first distributed mobile architecture server is in direct physical connection with a wireless transceiver; and

[h] a second distributed mobile architecture server, comprising:

[i] a second computer readable medium;

[j] a second mobile switching center module embedded in the second computer readable medium;

[k] a second base station controller module embedded in the second computer readable medium;

[l] a second call detail record (CDR) generation program embedded in the second computer readable medium; and

> [m] a program to allow a group call among four or more mobile communication devices, wherein the program is embedded in the second computer readable medium,
>
> [n] wherein the second distributed mobile architecture server is in direct physical connection with a second wireless transceiver;
>
> [o] wherein telephony traffic received at the first wireless transceiver of the first distributed mobile architecture server is transmitted from the first distributed mobile architecture server to the second distributed mobile architecture server via a peer-to-peer connection.

Ex. 1001, 12:17–51.

E. Asserted References

Petitioner relies on the following references:

Name	Reference	Ex. No.
Waylett	U.S. Patent No. 8,184,603 B2, issued May 22, 2012	1005
Cope	U.S. Patent No. 8,271,619 B1, issued Sept. 18, 2012	1006

Petitioner also relies on the Declaration of James Proctor (Ex. 1003, "Proctor Decl.") as support for the various contentions.

Patent Owner relies on the Declaration of Dr. Todor Cooklev (Ex. 2001, "Cooklev Decl.") as support for the various contentions.

F. Asserted Ground

Petitioner contends that claims 1, 4, 6, 9, and 15 of the '763 patent are unpatentable under the following ground:

Ground	Claim(s) Challenged	35 U.S.C. §	Reference(s)/Basis
I	1, 4, 6, 9, 15	§ 103[1]	Waylett, Cope

Pet. 2.

II. ANALYSIS

A. Principles of Law for Patentability

A patent claim is unpatentable under 35 U.S.C. § 103(a) if the differences between the claimed subject matter and the prior art are such that the subject matter, as a whole, "would have been obvious at the time the invention was made to a person having ordinary skill in the art to which said subject matter pertains." *KSR Int'l Co. v. Teleflex Inc.*, 550 U.S. 398, 406 (2007). The question of obviousness is resolved on the basis of underlying factual determinations including: (1) the scope and content of the prior art; (2) any differences between the claimed subject matter and the prior art; (3) the level of ordinary skill in the art; and (4) when in evidence, objective evidence of nonobviousness. *Graham v. John Deere Co.*, 383 U.S. 1, 17–18 (1966).

---

[1] The Leahy-Smith America Invents Act, Pub. L. No. 112-29, 125 Stat. 284 (2011) ("AIA"), amended 35 U.S.C. § 103. Because the challenged claims of the '763 patent have an effective filing date before the effective date of the applicable AIA amendments, we refer to the pre-AIA version of 35 U.S.C. § 103 throughout this Decision.

C. Level of Ordinary Skill in the Art

Petitioner defines the person of ordinary skill in the art as follows: "As of 2005, a person of ordinary skill in the art . . . of the '763 patent's field would have had a bachelor's degree in electrical engineering, computer engineering, or an equivalent, as well as two years of industry experience related to telecommunications networks." Pet. 3 (citing Ex. 1003 ¶ 56). Petitioner also asserts that "[a]dditional graduate education could substitute for professional experience, or significant experience in the field could substitute for formal education." *Id.*

Patent Owner states that "Lemko applies Petitioners' definition of a person of ordinary skill in the art ('POSITA')" "[f]or the purpose of this preliminary response only." Prelim. Resp. 16.

Petitioner's definition of a person of ordinary skill in the art appears reasonable and consistent with the prior art. Therefore, we adopt that definition for our analysis in this decision.

D. Claim Construction

For petitions filed on or after November 13, 2018, as here, "[claims] of a patent . . . shall be construed using the same claim construction standard that would be used to construe the [claims] in a civil action under 35 U.S.C. § 282(b), including construing the [claims] in accordance with the ordinary and customary meaning of such claims as understood by one of ordinary skill in the art and the prosecution history pertaining to the patent." 37 C.F.R. § 42.100 (2019); *see also Phillips v. AWH Corp.*, 415 F.3d 1303, 1312–14 (Fed. Cir. 2005).

Petitioner does not submit constructions for any claim terms.

Petitioner states: "the Board does not need to explicitly construe any

claim term and there are no known claim construction disputes that affect the outcome of this Petition." Pet. 5–6.

Patent Owner argues that the "Board should deny the Petition under 37 C.F.R. § 42.104(b)(3)–(4) because Petitioner did not construe the Challenged Claims or identify '[h]ow the construed claim is unpatentable under the statutory grounds.'" Prelim. Resp. 17 (alteration in original). Specifically, according to Patent Owner, the claim limitation "distributed mobile architecture" requires construction. *Id.* Patent Owner asserts that:

> Petitioners were obligated to take at least one of these paths [with respect to the claim limitation "distributed mobile architecture"]:
>
> 6. Claim Construction: If a petitioner believes that a claim term requires an express construction, the petitioner must include a statement identifying a proposed construction of the particular term and where the intrinsic and/or extrinsic evidence supports that meaning. *On the other hand, a petitioner may include a statement that the claim terms require no express construction*.

Id. (quoting Patent Trial and Appeal Board Consolidated Trial Practice Guide (Nov. 2019) ("CTPG") at 44) (emphasis added).

Given that we are denying the Petition, it is unnecessary to resolve whether, as Patent Owner asserts, Petitioner had an obligation to construe "distributed mobile architecture."

E. Overview of the Prior Art References

1. Waylett (Ex. 1005)

Waylett describes a system for "providing high capacity voice and high speed data communication between a number of user equipment terminals (UEs) and a public network via a community Wireless Local Area Network (WLAN)." Ex. 1005, 2:20–24.

Figure 1A of Waylett depicts an embodiment of a communication system that includes a community WLAN, and is reproduced below.

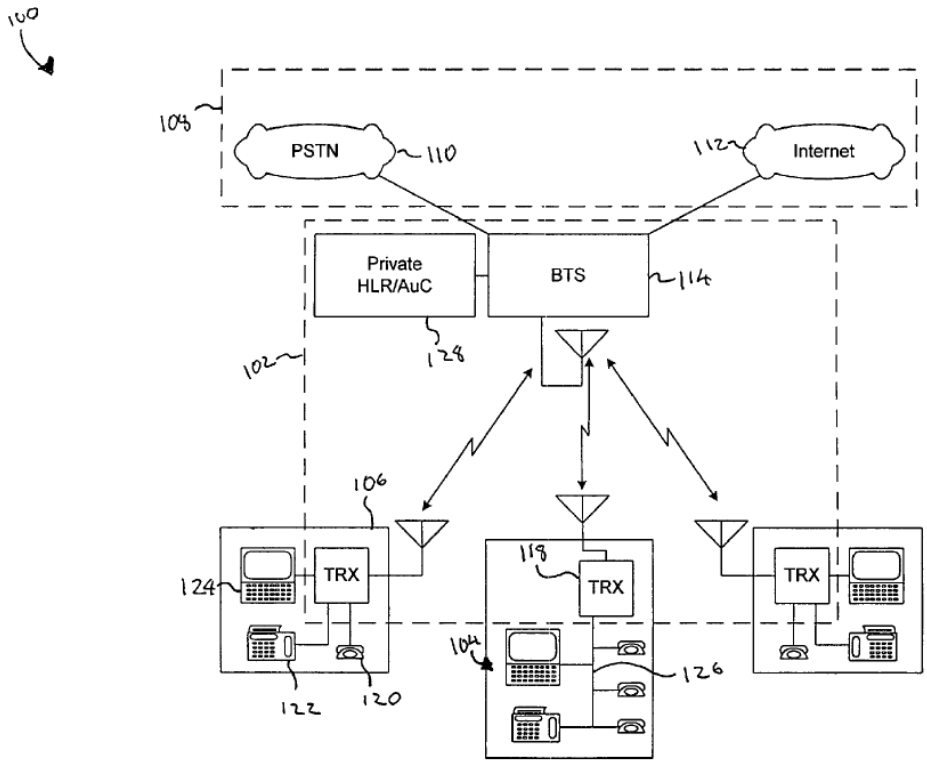

FIG. 1A

Figure 1A of Waylett is a block diagram of a communication system 100.

As shown in Figure 1A, Waylett's communication system 100 includes community WLAN 102 for providing access to public network 108 from a number of UEs 104 at different sites 106, where public network 108 comprises public switched telephone network (PSTN) 110 and Internet 112. Ex. 1005, 7:4–8. WLAN 102 includes centralized base station transceiver station (CBTS) 114 coupled to public network 108 and to remote transceiver stations (RTSs) 118 at the different sites 106. *Id.* at 7:9–14.

WLAN 102 further includes private home location registry/authentication server (HLR/AuC) 128, which is "coupled to the CBTS 114 for recording and storing information relating to users or subscribers of the community WLAN." Ex. 1005, 7:23–27. HLR/AuC 128, together with subscriber identity modules (SIMs) in UEs 104, "enables generation and recording of call detail records (CDRs) for billing purposes, facilitates incoming communication from the public network 108, and allows communication between UEs 104 at different sites 106 with the community WLAN 102 service area." *Id.* at 7:45–49.

"[P]referably the CBTS 114 is a complete stand-alone Network-In-a-Box (NIB)." Ex. 1005, 8:7–8. In an embodiment, an NIB "includes a MSC, a BSC and a BTS in a single enclosure." *Id.* at 9:41–42.

2. Cope (Ex. 1006)

Cope relates to "the establishment of telephony service using peer-to-peer IP connections that extend the service reach of packet telephony networks." Ex. 1006, 1:24–26. In particular, Cope's disclosure "allows an end-user who is connected to a first service provider to obtain packet-based telephony services from a second service provider, even though the end-user is not directly connected to the second service provider." *Id.* at 3:57–60.

F. Ground I

Petitioner challenges claims 1, 4, 6, 9, 15 as unpatentable under 35 U.S.C. § 103 over the combination of Waylett and Cope. Pet. 9–37.

"In an [*inter partes* review], the petitioner has the burden from the onset to show with particularity why the patent it challenges is unpatentable." *Harmonic Inc. v. Avid Tech., Inc.*, 815 F.3d 1356, 1363 (Fed. Cir. 2016) (citing 35 U.S.C. § 312(a)(3) (requiring *inter partes* review

petitions to identify "with particularity . . . the evidence that supports the grounds for the challenge to each claim")). This burden of persuasion does not shift to Patent Owner, except in limited circumstances not present here. *See Dynamic Drinkware, LLC v. Nat'l Graphics, Inc.*, 800 F.3d 1375, 1378 (Fed. Cir. 2015) (discussing the burden of proof in *inter partes* review).

1. Claim 1

Petitioner's basic position is that Waylett teaches all the claim limitations but for "a peer-to-peer [P2P] connection" to "transmit[]" "telephony traffic received at the first wireless transceiver of the first distributed mobile architecture server . . . from the first distributed mobile architecture server to the second distributed mobile architecture server" (1.[o]). *See* Pet. 9–23 (discussing 1.[a]–[n]), 23–26 (explaining that "Waylett discloses 1.[o], except for a '*peer-to-peer connection*'").

Petitioner relies on Cope for teaching a P2P connection. *See* Pet. 26 (contending that "Cope discloses a '*peer-to-peer connection'* (referred to as a 'P2P connection')"; citing Ex. 1003 ¶¶ 156–161).

Petitioner contends that "[a] skilled artisan would have been motivated to incorporate Cope's P2P connection in the system of Waylett" (Pet. 28) because:

1. "Cope explains that P2P connections 'dramatically expands end-user choice and stimulates meaningful competition at the service level,' as well as 'numerous other advantages'" (*id.* (citing Ex. 1006, 3:65–4:3; Ex. 1003 ¶ 164));
2. "Cope also explains that peer-to-peer connections allow for 'far more efficient' routing of IP traffic through an internet gateway and over the internet to other service providers" (*id.* (citing Ex. 1006, 3:17–20, 3:4–20; Ex. 1003 ¶ 164)); and,
3. "a peer-to-peer IP connection, as described by Cope, [would] further Waylett's express goal of providing voice and high-

> speed data communication to users in un-served or under-served communities" (*id.* at 29 (citing Ex. 1005, 3:3–7; Ex. 1006, 4:6–9; Ex. 1003 ¶ 165)).

Also, "[a] skilled artisan would have recognized that using peer-to-peer connections for Waylett's telephony traffic was nothing more than the simple substitution of one known element (i.e., a peer-to-peer IP connection) for another (i.e., the connection between NIBs in Waylett's Figure 11)." *Id.* at 29–30 (citing *KSR Int'l Co. v. Teleflex Inc.*, 550 U.S. 398, 401 (2007); Ex. 1003 ¶ 166).

Patent Owner disagrees that the "peer-to-peer" limitation (1.[o]) is the only limitation Waylett fails to teach. Patent Owner contends that Waylett also fails to teach a first and second "computer readable medium" (1.[c], 1.[i]) with the recited embedded modules (1.[d]–[f] and 1.[j]–[m]).[2] Prelim. Resp. 21–23. Patent Owner argues that:

> Each Challenged Claim requires that the first and second DMA servers include computer readable media having MSC, BSC, and call detail record ("CDR") functionality. Waylett does not disclose such computer readable media (and Petitioners do not contend that Cope remedies this shortcoming). Instead, Waylett is based on the conventional, hardware-implemented paradigm.

Id. at 21 (citing Ex. 2001 ¶ 60).

We find that the evidence on this record weighs in favor of Patent Owner's argument; that is, Petitioner's contention that Waylett necessarily

---

[2] Claim 1 calls for a "first" and a "second" "computer readable medium." 1.[c], [i]. Each has a "mobile switching center module" [MSC], a "base station controller module" [BSC], and a "call detail record (CDR) generation program" embedded in it. 1.[d]–[f], [j]–[l]. The second computer readable medium has "a program to allow a group call among four or more mobile communication devices" (1.[m]) additionally embedded in it.

teaches a computer readable medium is not sufficiently supported by the evidence.

Petitioner focuses on Waylett's disclosure of a Network-In-A-Box™ (NIB) to show that Waylett teaches the recited first and second computer readable medium (1.[c], 1.[i]). *See, inter alia*, Pet. 12–15. Petitioner provides an annotated version of Figure 11 of Waylett, reproduced below, with NIB 224 highlighted in yellow:

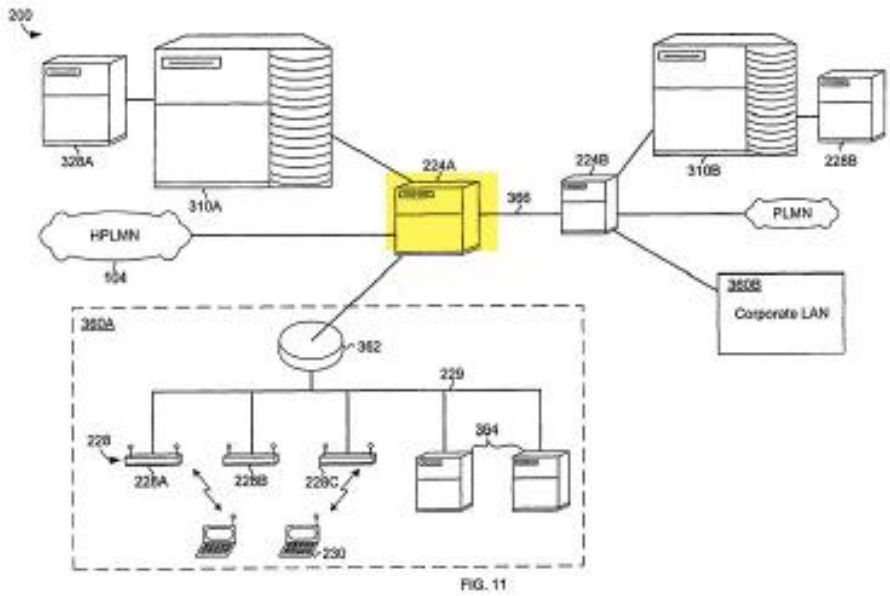

> Waylett Figure 11 is a block diagram of a communication system having NIBs 224A (highlighted in yellow) and 224B, multiple Remote Authentication Dial In User Service (RADIUS) servers (310A, 310B), authentication servers (328A, 328B) and clients. *See* Ex. 1005, 17:7–16.

Id. at 12 (reproducing Ex. 1005, Figure 11 (annotated); citing Ex. 1003 ¶¶ 95–100).

According to Petitioner, NIB 224 "contains a single enclosure that includes a mobile switching center [MSC], base station controller [BSC], and base station transceiver [BST]." Pet. 12 (citing Ex. 1005, 9:32–46; Ex.

1003 ¶ 103). "With this implementation, a skilled artisan would have recognized that, to implement such functionality, the NIB 224 *must necessarily* include a computer readable medium." *Id.* at 13 (citing Ex. 1003 ¶ 104) (emphasis added).

Petitioner finds support in the commercially-available interWAVE Communications' NIB that is described in Waylett as an embodiment of its invention. Ex. 1005, 9:36–40 ("In one embodiment, the private cellular network 222 includes at least one WAVEXchange™ (WXC) or a Network-In-A-Box™ (NIB 224) commercially available from interWAVE Communications Inc., of Menlo Park, Calif."); Pet. 13. Petitioner explains that "Waylett describes a commercially available system—that is, interWAVE Communications' Network-In-A-Box™ (NIB 224)—that implements its components (e.g., MSC, BSC, RADIUS server, HLR, VLR, etc.) *using software on a computer readable medium*." Pet. 13 (citing Ex. 1005, 9:36–40, Ex. 1010) (emphasis added). Petitioner submits a press release from Wireless Networks Online℠ (Ex. 1010) which it asserts shows interWAVE Communications' NIB including a computer readable medium. *Id.* Petitioner specifically quotes the following passage from said press release: "[interWAVE] has pioneered a product suite that provides all of the infrastructure equipment and software necessary to support an entire wireless network within a single compact system [referring to its Network-In-A-Box]." *Id.* (quoting Ex. 1010, bracketed text added by Petitioner; citing Ex. 1003 ¶ 104).

Patent Owner disagrees. Patent Owner contends that Waylett's NIB 224 does not necessarily include a computer readable medium as claimed. Prelim. Resp. 21–26.

According to Patent Owner, "consistent with the then-conventional hardware-based paradigm, Waylett's MSC and BSC are implemented in hardware network cards, not in software." Prelim. Resp. 26 (citing Ex. 1005, 8:7–36, Fig. 2; Ex. 2013). "Waylett does not inherently disclose software-based MSC, BSC, or CLR functionality embedded in a computer readable medium because a POSITA would have understood from Waylett's disclosure that the relevant functionality was provided with hardware, not software." *Id.* (citing Ex. 2001 ¶¶ 66–67).

In support, Patent Owner provides an annotated version of Waylett Figure 2, reproduced below, which it contends "disclos[es] that the NIB depends on a number of cards [shown in red]." Prelim. Resp. 24 (citing Ex. 2001 ¶ 64). Patent Owner depicts in red the "plug-in modules or cards 140." *Id.* (Ex. 1005, 8:12).

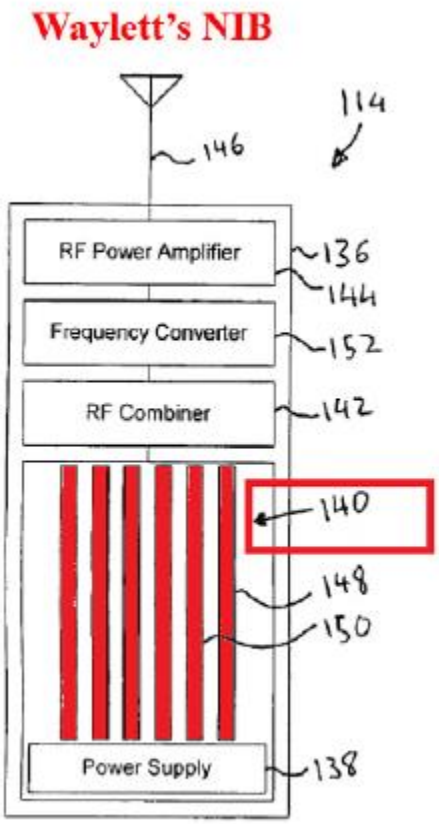

FIG. 2

> Figure 2 of Waylett shows a centralized base transceiver station (CBTS) 114 with "a number of plug-in modules or cards 140," depicted in red. Ex. 1005, Figure 2, 8:12. "Referring to FIG.2, preferably the CBTS 114 is a complete stand-alone Network-In-a-Box (NIB), such as a WAVEXpress NIB platform, commercially available from Interwave Communications, of Menlo Park, Calif." *Id.* at 8:7–10.

In further support, Patent Owner provides a photo, reproduced below, of what it contends is "Waylett's NIB platform with network cards." Prelim. Resp. 24–25 (citing Ex. 2012). The photo is taken from Exhibit 2012, which is a webpage describing various interWAVE GSM/GPRS products, and appears next to a description of the "interWAVE's Network In-A-BoxTM (NIB) product." Ex. 2012, 1.

Photo next to a description of "interWAVE's Network In-A-Box™ (NIB) product." Ex. 2012, 1.

Based on said evidence, Patent Owner argues that "Waylett does not disclose embedding MSC, BSC, or CDR functionalities into a computer readable medium because, like traditional networks systems, those functions are implemented in hardware." Prelim. Resp. 25 (citing Ex. 2012; Ex. 1003 ¶¶ 64–65).

We find that the evidence on this record weighs in favor of Patent Owner's argument that Waylett does not necessarily teach a computer readable medium. Petitioner's contention that Waylett *necessarily* teaches a computer readable medium is not sufficiently supported by the evidence.

Petitioner does not point us to any disclosure in Waylett describing the NIB 224 as including a computer readable medium. Petitioner explains that NIB 224 "contains a single enclosure that includes a mobile switching center, base station controller, and base station transceiver." Pet. 12 (citing Ex. 1005, 9:32–46; Ex. 1003 ¶ 103). But Petitioner does not further explain how it is that a "single enclosure that includes a mobile switching center, base station controller, and base station transceiver" "*must necessarily* include a computer readable medium." *Id.* at 13 (citing Ex. 1003 ¶ 104). Emphasis added. Mr. Proctor's testimony is not helpful because it simply repeats what is said in the Petition. *Cf.* Ex. 1003 ¶¶ 103–104; Pet. 13. We gain no further insight into why a POSITA would understand Waylett's NIB 224 to *necessarily* include a computer readable medium notwithstanding Waylett does disclose not a computer readable medium.

Petitioner provides a press release from Wireless Networks Online^{SM} (Ex. 1010) to support its assertion that interWAVE Communications' NIB, a commercially-available embodiment of NIB 224, includes a computer readable medium. Pet. 13 (citing Ex. 1010; Ex. 1005, 9:36–40 (discussing interWAVE Communications' NIB 224); Ex. 1003 ¶ 103). However, we have been unable to find any mention of a computer readable medium in said document, let alone two computer readable mediums embedded with the modules recited in the claim.

Petitioner quotes a passage from said press release purported to refer to interWAVE's NIB. Pet. 13. The quoted passage is: "[interWAVE] has pioneered a product suite that provides all of the infrastructure equipment and software necessary to support an entire wireless network within a single compact system." Ex. 1010; Pet. 13. However, an indication that

"necessary software" is provided does not sufficiently show that interWAVE's NIB is necessarily provided with, more specifically, the two computer readable mediums embedded with the modules as recited in the claim. Petitioner cites Mr. Proctor's testimony but it simply repeats what is said in the Petition. *Cf.* Ex. 1003 ¶ 104; Pet. 13. It provides no insight into why a POSITA reading the press release would understand the indicated provided-for "necessary software" necessarily refers to the two computer readable mediums with the functionality as claimed.

In contrast, Patent Owner provides evidence that shows Waylett's NIB platform having network cards. The evidence shows that Waylett discloses that the NIB contains "a number of plug-in modules or cards 140." Prelim. Resp. 2 (citing Ex. 2001 ¶ 64; Fig 2 (annotated)). And the photo that appears next to a description of "interWAVE's Network In-A-Box™ (NIB) product" shows a machine with cards. Ex. 2012, 1; Prelim. Resp. 25 (citing Ex. 2001 ¶¶ 64–65). This evidence undercuts Petitioner's contention that Waylett *necessarily* teaches a computer readable medium.

Petitioner argues, alternatively, that "[t]o the extent that Patent Owner disagrees, such an implementation of the NIB components (e.g., MSC, BSC, RADIUS server, HLR, VLR, etc.) on a computer readable medium in a NIB would have been obvious." Pet. 13 (citing Ex. 1003 ¶¶ 105–110).

Petitioner presents four reasons why it would have been obvious to a POSITA to implement components having the recited functionality on a computer readable medium in a NIB.

First, Petitioner contends that "it was an obvious variation of implementing known components in the prior art." Pet. 13 (citing Ex. 1003

¶ 106); *KSR*, 550 U.S. at 401 ("more than the predictable use of prior art elements according to their established functions").

Mr. Proctor's testimony, which is provided to support Petitioner's contention, is:

- "Each NIB component—such as the MSC, BSC, HLR, VLR—had well-known functionality defined by communications standards;"
- "[b]ased on these standards, a POSA would have recognized that these components were known in the prior art;"
- "[a]t that time, software implementation was a well-known way to implement network functions, such as those performed by Waylett's NIB components;" and,
- a POSITA "would have understood that implementing these components using software would be obvious variation of implementing well-known components."

Ex. 1003 ¶ 106.

The difficulty with this testimony is that is not supported by any facts. For example, Mr. Proctor fails to present facts to support the assertion that "software implementation was a well-known way to implement network functions, such as those performed by Waylett's NIB components," at the time of the invention. Ex. 1003 ¶ 106. Moreover, the claimed subject matter is not merely directed to a software alternative to computer hardware but rather a system comprising two computer readable medium with distinct modules embedded in each.

Second, Petitioner contends that "applying this known technique—that is, an implementation on a computer readable medium—to Waylett's NIB components would result in similar improvements and not have been beyond the skill of an ordinary artisan." Pet. 13–14 (citing Ex. 1003 ¶ 107; *KSR*, 550 U.S. at 401 ("[I]f a technique has been used to improve one

device, and a person of ordinary skill in the art would recognize that it would improve similar devices in the same way, using the technique is obvious unless its actual application is beyond that person's skill.").

Mr. Proctor's testimony, which is provided to support Petitioner's contention, is:

- "implementing Waylett's NIB components on a computer readable medium would have been the application of a known technique—that is, programming these components in software—resulting in improvements typical to all software;"
- "[i]mplementing in software, for example, allows a user to fix problems with software over a network rather than dispatching an employee to location to fix hardware;"
- [s]uch an implementation would not have been beyond the skill of a POSA;" and,
- "a POSA would have known how to implement Waylett's NIB components in software."

Ex. 1003 ¶ 107.

Again, this testimony is not supported by any facts. For example, Mr. Proctor fails to present facts to support the assertion that it was known to "program[] *these* components in software—resulting in improvements typical to all software." Ex. 1003 ¶ 107. Emphasis added. Moreover, the claimed subject matter is not merely directed to a software alternative to computer hardware but rather a system comprising two computer readable medium with distinct modules embedded in each.

Third, Petition contends that "a skilled artisan would have been motivated to implement Waylett's NIB components in a computer readable medium" in order "to make manufacturing NIBs cost-effective [whereby] one would replicate the software in each NIB as opposed to designing a new hardware component." Pet. 14 (citing Ex. 1003 ¶ 108).

Mr. Proctor's testimony, which is provided for support, is not helpful because it simply repeats what the Petition says. *Cf.* Ex. 1003 ¶ 108; Pet. 14.

Fourth, "a skilled artisan would have been motivated to implement Waylett's NIB components in a computer readable medium" in order "to allow for easy implementation of system-wide updates." Pet. 14 (citing Ex. 1003 ¶ 109). "Such a person would have recognized that software updates can be sent over the internet, rather than having to update the hardware in each NIB." *Id.*

Mr. Proctor's testimony, which is provided for support, is not helpful because it simply repeats what the Petition says. *Cf.* Ex. 1003 ¶ 109; Pet. 14.

For the foregoing reasons, we find the record does not sufficiently support the four reasons Petitioner provides for why it would have been obvious to a POSITA to implement components having the recited functionality on a computer readable medium in a NIB. As result, Petitioner does not sufficiently show that "an implementation of the NIB components (*e.g.*, MSC, BSC, RADIUS server, HLR, VLR, etc.) on a computer readable medium in a NIB would have been obvious." Pet. 13 (citing Ex. 1003 ¶¶ 105–110).

The evidence does not sufficiently support Petitioner's contentions that Waylett necessarily teaches a computer readable medium or, in the alternative, that it would have been obvious to a POSITA to implement Waylett's components having the recited functionality on a computer readable medium in a NIB. Accordingly, the Petition does not establish a reasonable likelihood that independent claim 1 is unpatentable over the combination of Waylett and Cope.

2. Claims 4, 6, 9, and 15

For the same reasons as set forth above, namely, that Petitioner provides insufficient evidence in support of its contentions related to claim 1 that Waylett necessarily teaches the claimed first and second "computer readable medium" (1.[c], 1.[i]) with the recited embedded modules (1.[d]–[f] and 1.[j]–[m]) and that it would have been obvious to a POSITA to implement Waylett's components having the recited functionality on a computer readable medium in a NIB, the Petition also does not establish a reasonable likelihood that dependent claims 4, 6, 9, and 15 are unpatentable over the combination of Waylett and Cope.

III. CONCLUSION

For the foregoing reasons, we determine that Petitioner has not demonstrated a reasonable likelihood that it would prevail in showing the unpatentability of at least one of claims 1, 4, 6, 9, and 15 of the '763 patent. Accordingly, we deny the Petition.

IV. ORDER

In consideration of the foregoing, it is hereby:

ORDERED that, pursuant to 35 U.S.C. § 314(a), *inter partes* review of claims 1, 4, 6, 9, and 15 of the '763 patent is denied.

FOR PETITIONER:

Matthew Hopkins
Barry K. Shelton
WINSTON & STRAWN LLP
mhopkins@winston.com
bshelton@winston.com

FOR PATENT OWNER:

James Hannah
Aaron M. Frankel
Jeffrey H. Price
Jenna Fuller
Jeffrey Eng
KRAMER LEVIN NAFTALIS & FRANKEL LLP
jhannah@kramerlevin.com
afrankel@kramerlevin.com
jprice@kramerlevin.com
jfuller@kramerlevin.com
jeng@kramerlevin.com