IN THE UNITED STATES PATENT AND TRADEMARK OFFICE

BEFORE THE PATENT TRIAL AND APPEAL BOARD

MICROSOFT CORPORATION AND AFFIRMED NETWORKS, INC.

Petitioners,

v.

LEMKO CORPORATION,
Patent Owner.

Case No. IPR2023-00530
U.S. Patent No. 7,548,763

PETITION FOR *INTER PARTES* REVIEW
OF U.S. PATENT NO. 7,548,763

TABLE OF CONTENTS

Page

I. Introduction 1
II. Requirements for *Inter Partes* Review 1
A. Certification 2
B. Identification of Challenges 2
III. The '763 Patent 2
A. Effective Filing Date 2
B. Level of Ordinary Skill in the Art 3
C. Overview of the Challenged '763 Patent 3
D. Relevant Prosecution History 5
IV. Claim Construction 5
V. Detailed Discussion of the Grounds for Unpatentability 6
A. Overview of the Prior Art 6
1. Waylett (Ex. 1005) 6
2. Cope (Ex. 1006) 8
B. Ground 1: Claims 1, 4, 6, 9, and 15 Are Rendered Obvious by Waylett (Ex. 1005) in view of Cope (Ex. 1006) 9
1. Claim 1 9
a. Preamble 9
b. A First DMA Server 10
c. A First Computer Readable Medium 12
d. A First MSC 15
e. A First BSC 15
f. A CDR Generation Program 16
g. A First Wireless Transceiver 17
h. A Second DMA Server 19
i. A Second Computer Readable Medium 21
j. A Second MSC 21
k. A Second BSC 21

l. A Second Call Detail Record Generation Program 22
m. A Group Call Program 22
n. A Second Wireless Transceiver 23
o. Peer-to-peer connection for telephony traffic 23
i. Waylett discloses a connection for telephony traffic 24
ii. Cope discloses a peer-to-peer connection. 26
iii. A POSITA Would Have Found It Obvious to Include Cope's P2P Connection in Waylett's Communication System 27
2. Claims 4 and 6 30
a. Home Location Register 30
b. Visitor Location Register 31
3. Claim 9 33
4. Claim 15 34
C. No Secondary Considerations Exist 38
VI. The Parallel District Court Proceeding Does Not Warrant a Discretionary Denial 38
VII. Mandatory Notices 39
A. Real Parties-in-Interest 39
B. Related Proceedings 39
C. Lead and Backup Counsel 39
D. Electronic Service 40
VIII. Fees 40
IX. Conclusion 40

TABLE OF AUTHORITIES

Cases **Page(s)**

KSR Intern. Co. v. Teleflex Inc.,
550 U.S. 398 (U.S. 2007).....13, 14, 30

Statutes

35 U.S.C. § 102(e) 6, 8

35 U.S.C. § 314(a) 38

Other Authorities

37 C.F.R. § 42.104 .....1, 2

37 C.F.R. § 42.106 1

PETITIONER'S EXHIBIT LIST

Ex. No.	Brief Description
1001	U.S. Patent No. 7,548,763
1002	File History of U.S. Patent No. 7,548,763
1003	Declaration of James Proctor
1004	CV of James Proctor
1005	U.S. Patent No. 8,184,603 to Waylett et al.
1006	U.S. Patent No. 8,271,619 to Cope et al.
1007	Service of Complaint for Patent Infringement served on Microsoft Corp., *Lemko Corp. v. Microsoft Corp. and Affirmed Networks Inc.*, 3:22-CV-00363-L (N.D. Texas)
1008	Service of Complaint for Patent Infringement served on Affirmed Networks Inc.., *Lemko Corp. v. Microsoft Corp. and Affirmed Networks Inc.*, 3:22-CV-00363-L (N.D. Texas)
1009	Technical Specification, *Digital cellular telecommunications system (Phase 2+); Voice Group Call Service (VGCS) – Stage 1 (3GPP TS 02.68 version 8.1.0 Release 1999)*, ETSI TS 100 925 v8.1.0 (2000-11)
1010	*interWAVE to provide wireless GSM network on cruise ship*, Wireless Networks Online, Dec. 21, 2000

I. Introduction

Petitioners request *inter partes* review ("IPR") of claims 1, 4, 6, 9, and 15 ("Challenged Claims") of U.S. Patent No 7,548,763 ("'763 Patent").

The supposed inventive feature of the '763 patent is a distributed mobile architecture ("DMA") system that is relatively inexpensive to deploy and inexpensive to operate. Multiple DMA systems can be combined to form various network configurations, like the configuration recited in claim 1. But Waylett—which was never considered by the Examiner—disclosed this supposed inventive system and network configuration years earlier. The only feature of claim 1 not disclosed by Waylett is that the transmission of telephony traffic occurs over a "*peer-to-peer connection*," which was well-known at the time and taught by Cope. Taken together, the combination of Waylett and Cope render the alleged inventive concept of the '763 patent and the challenged claims obvious.

All challenged claims should be found unpatentable given the strength of the prior art as shown herein.

II. Requirements for *Inter Partes* Review

This Petition complies with all statutory requirements, as well as 37 C.F.R. §§ 42.104, 42.105, and 42.15, and should be accorded a filing date pursuant to 37 C.F.R. § 42.106. The required fee is being paid electronically through P-TACTS.

A. Certification

As required by 37 C.F.R. § 42.104(a), Petitioners certify that the '763 patent "is available for *inter partes* review and that the Petitioners are not barred or estopped from requesting an *inter partes* review challenging the patent claims on the grounds identified in the petition." Petitioners certify that this Petition is filed within one year of the date of service of the complaint—February 16, 2022. *See* Exs. 1007, 1008. Neither Petitioners, nor any party in privity with Petitioners, have filed a civil action challenging the validity of any claim of this patent. Petitioners therefore certify that the '763 patent is available for *inter partes* review.

B. Identification of Challenges

Under 37 C.F.R. §§ 42.104(b) and 42.22, Petitioners request that the Board institute this IPR on the Challenged Claims of the '763 Patent and cancel those claims as unpatentable on the following grounds:

Ground	Claims	Basis for Unpatentability
1	1, 4, 6, 9, and 15	Obvious over Waylett in view of Cope

III. The '763 Patent

A. Effective Filing Date

The '763 Patent resulted from Application No. 11/105,173 ("'173 Application"), filed April 13, 2005. For the purposes of this Petition, Petitioners

assume that the Challenged Claims are entitled to a priority date no earlier than April 13, 2005.

B. Level of Ordinary Skill in the Art

As of 2005, a person of ordinary skill in the art ("POSITA" or "skilled artisan") in the field of the '763 patent's field would have had a bachelor's degree in electrical engineering, computer engineering, or an equivalent, as well as two years of industry experience related to telecommunications networks. Ex. 1003, ¶ 56. Additional graduate education could substitute for professional experience, or significant experience in the field could substitute for formal education. Ex. 1003, Proctor Decl., ¶ 56. As shown by his CV (Ex. 1004) and as described in his expert declaration (Ex. 1003, ¶¶ 3–24), Mr. Proctor was qualified as a POSITA at the relevant time.

C. Overview of the Challenged '763 Patent

The '763 patent relates to distributed mobile communications systems. Ex. 1001, 1:7–9. It describes a distributed management architecture (DMA) server (*e.g.*, DMA 106) including conventional features of a base station controller (BSC) 208 and mobile switching center (MSC) 206 in a single enclosure, which allows mobile subscribers to communicate wirelessly, shown in Figure 2 below.

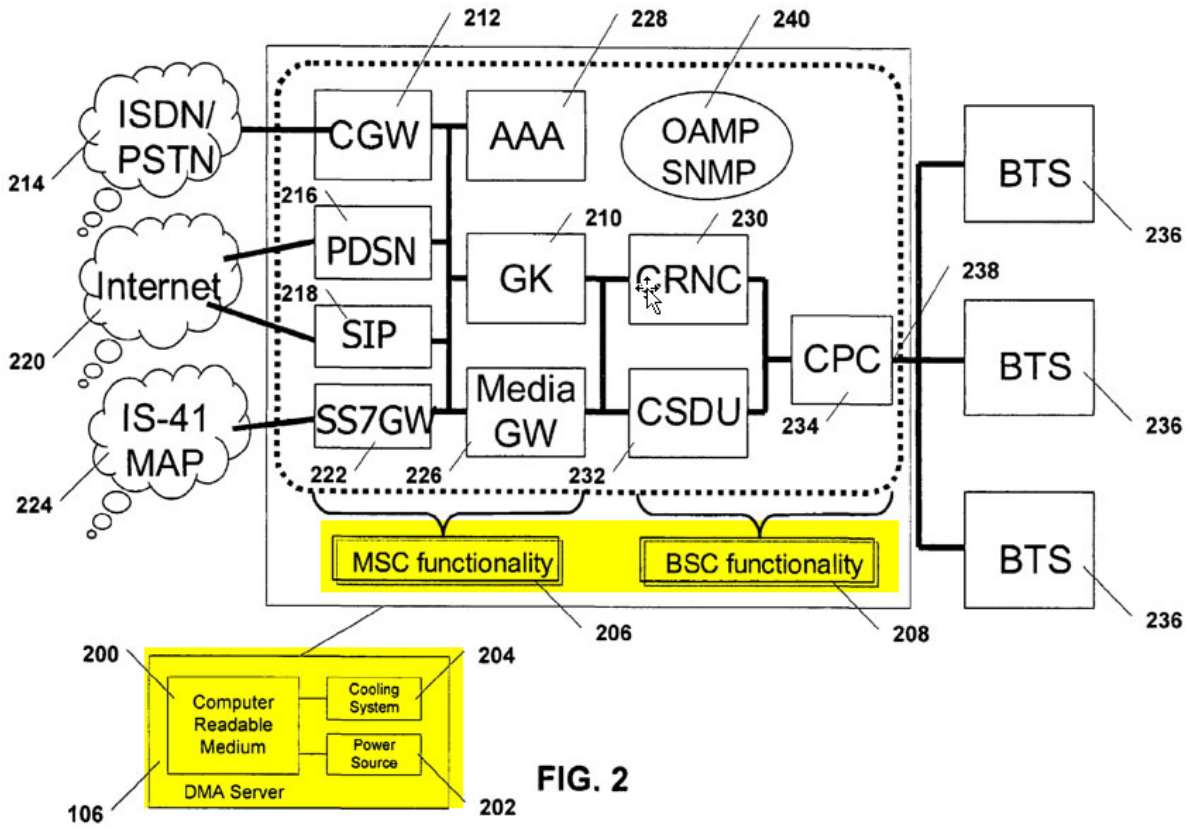

FIG. 2

Ex. 1003, ¶¶ 62–65, Ex. 1001, Fig. 2 (annotated), 4:1–31.

The ’763 patent identifies that “[c]urrent telephone systems are expensive to deploy” and that “such a system may require a minimum of ten thousand users in order to be economically viable. In many rural areas, the population is not large enough to support the installation of such a system.” Ex. 1001, 1:34-41; Ex. 1003, ¶ 62. To address the problem of high installation costs of conventional systems, the ’763 patent uses DMAs, which are implemented to extend an existing cellular network for routing calls between mobile subscribers. Ex. 1001, 7:56-58, *see id.*, 8:50-52. The ’763 patent touts DMAs as an improvement over the conventional

technologies because they are "relatively inexpensive to deploy" and "operate." Ex. 1001, 1:48-50; *see id.*, 4:45-60; Ex. 1003, ¶¶ 64, 67-68. Thus, the DMAs are the purported invention over the prior art.

D. Relevant Prosecution History

During prosecution, the claims were rejected multiple times by the Examiner. The Examiner rejected the claims over numerous references, such as U.S. Pat. No. 6,411,825 to Csapo, and U.S. Pub. No. 2006/0046760 to Bertino. (Ex. 1002 at 87.)

In its response dated January 9, 2009, Lemko ultimately distinguished the claims from the prior art based on the CDR feature:

> The cited portions of Lee, Csapo and Bertino, individually or in combination, do not disclose or suggest the specific combination of claim 11. For example, the cited portions of the above-cited references fail to disclose or suggest a first call detail record (CDR) generation program embedded in the first computer readable medium of the first distributed mobile architecture (DMA) server or a second call detail record (CDR) generation program embedded in the second computer readable medium of the second DMA server, as in claim 11.

Ex. 1002 at 230 (emphasis omitted). The Examiner allowed the claims based on Lemko's remarks in the January 2009 response. Ex. 1002 at 244. As shown below, the CDR feature and other claimed features are all disclosed in Waylett.

IV. Claim Construction

The Board construes claims under the same standard used in civil actions in federal district court. Petitioners submit that for the purposes of this Petition, the

Board does not need to explicitly construe any claim term and there are no known claim construction disputes that affect the outcome of this Petition.[1]

V. Detailed Discussion of the Grounds for Unpatentability

The Challenged Claims—that is, claims 1, 4, 6, 9, and 15—are obvious over Waylett (Ex. 1005) in view of Cope (Ex. 1006).

A. Overview of the Prior Art

1. Waylett (Ex. 1005)

Waylett was filed on July 15, 2004, and claims priority through several continuations filed as early as January 14, 2003. Waylett also claims priority to a provisional application filed on January 31, 2002. Therefore, it qualifies as prior art under at least pre-AIA 35 U.S.C. § 102(e).

It describes a device termed Network-In-A-Box (*e.g.*, NIB 224) including conventional features of a BSC and MSC in a single enclosure, which allows user equipment terminals to communicate wirelessly, shown in Figure 6 below. Ex. 1003, ¶ 75. Waylett states that "[t]he NIB 224 includes a MSC, a BSC and a BTS in a single enclosure." Ex. 1005, 9:41–42.

[1] This claim-construction analysis is not a concession as to the scope of any claim term in litigation, or a waiver of any argument in any proceeding that claim terms are indefinite, invalid, or unpatentable.

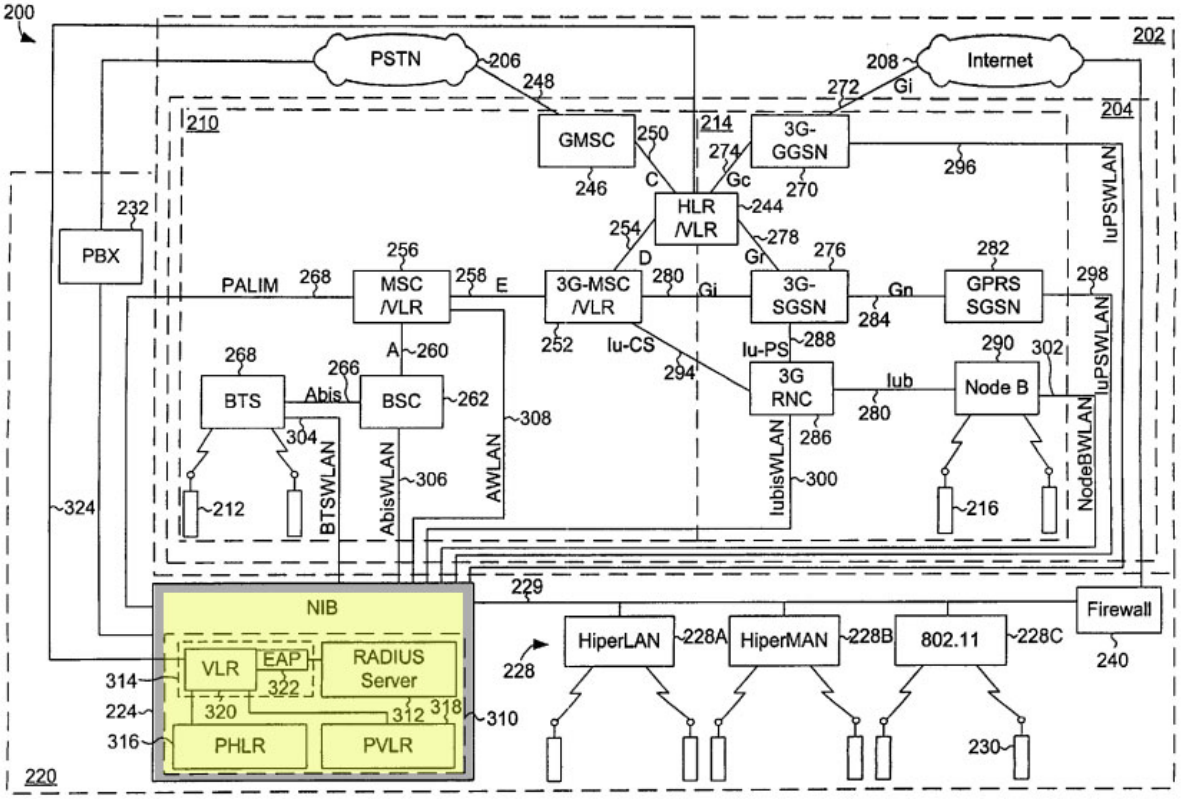

Ex. 1005, Fig. 6; 1003, ¶ 75.

Waylett identifies that "[a] fundamental drawback to the use of conventional wireless networks is the cost associated with radios or user equipment terminals (UEs) capable of communicating with [various wireless] networks," which is caused by "the difficulty and expense of scaling the network to provide services to additional users or additional services." Ex. 1005, 1:44-49, 1:57-60. To address these high costs, Waylett discloses "a complete, stand-alone Network-In-a-Box," *e.g.*, NIB 224, for use in a communication system "providing voice and data communication between a public network and a number of UEs." Ex. 1005, 8:7-8, 2:25-27; 1003, ¶¶ 78–79. Waylett's invention helps in expanding networks to "under

served areas or communities" or "communities hitherto unserved by conventional wireless or wired communications systems." Ex. 1005, 7:59-63, 7:67-8:3; 1003, ¶ 80.

Waylett also describes that multiple NIBs can work together, such as those in Figure 11:

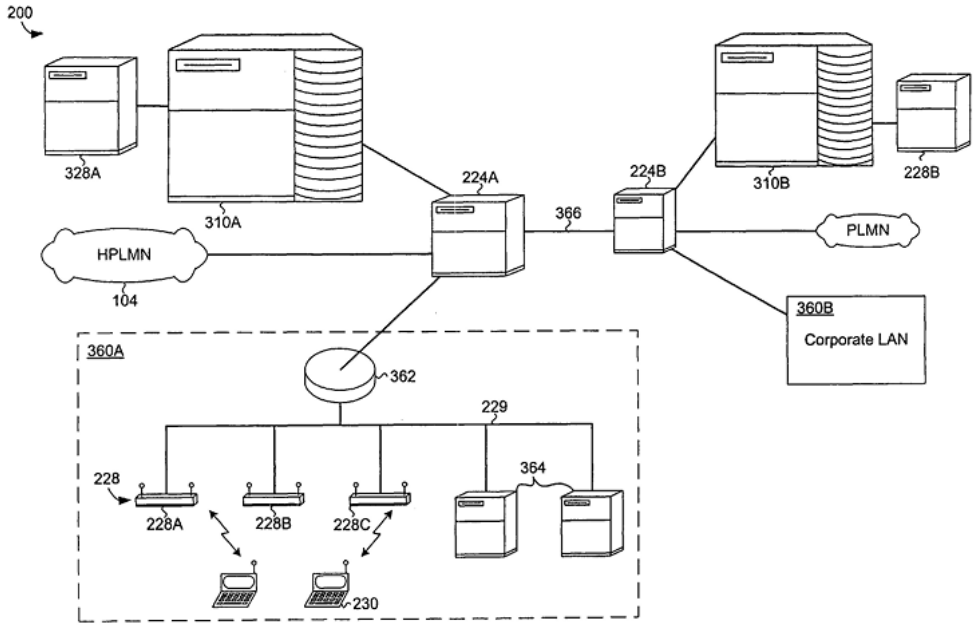

FIG. 11

Ex. 1005, Fig. 11; 1003, ¶¶ 81–82. Waylett explains that such systems, shown above, are "particularly suitable for use in enterprises operating a number of different WLANs 228 or corporate LANS 360A, 360B, at a number of different sites." Ex. 1005, 17:11–14; *see also id.* 17:7–16.

2. Cope (Ex. 1006)

Cope was filed on September 5, 2001, and issued September 18, 2012. Therefore, it qualifies as prior art under at least pre-AIA 35 U.S.C. § 102(e).

It describes using peer-to-peer IP connections between different service providers to communicate telephony traffic. 1003, ¶ 86. Cope is directed at "allow[ing] an end-user who is connected to a first service provider to obtain packet-based telephony services from a second service provider, even though the end-user is not directly connected to the second service provider" based on "an IP tunnel through both the first service provider and a peer-to-peer IP connection between the first and second service providers." Ex. 1006, 3:57-64. Cope defines "a 'peer-to-peer IP connection' [as] an IP connection between different service providers that is established by mutual agreement for the exchange of IP traffic." Ex. 1006, 6:3-6. Cope's technology is concerned with "expand[ing] potential service coverage areas—even to end-users in remote areas." Ex. 1006, 4:6-9; 1003, ¶ 87.

B. Ground 1: Claims 1, 4, 6, 9, and 15 Are Rendered Obvious by Waylett (Ex. 1005) in view of Cope (Ex. 1006)

1. Claim 1

a. Preamble

The preamble of claim 1 recites "*A system, comprising*."

To the extent the Board considers the preamble a limitation, Waylett discloses this limitation. 1003, ¶¶ 89–94. Waylett discloses a communication system that includes two Networks in a Box ("NIBs"), 224A and 224B, shown in Figure 11 below.

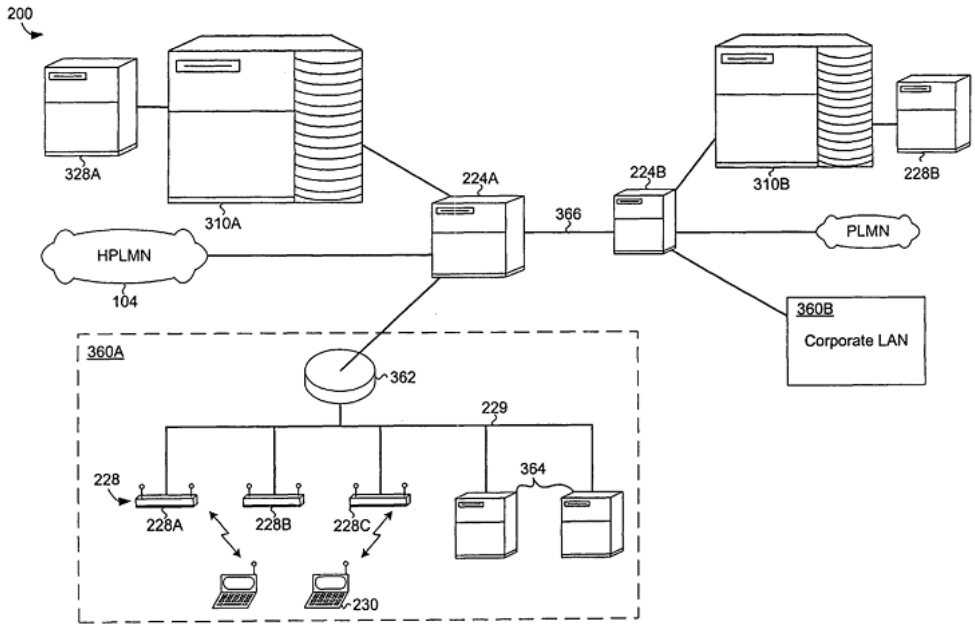

FIG. 11

Ex. 1005, Fig. 11; Ex. 1003, ¶ 91. Waylett further explains that the communication system in Figure 11 is "particularly suitable for use in enterprises operating a number of different WLANs 228 or corporate LANs 360A, 360B, at a number of different sites." Ex. 1005, 17:11–14; *see also id.*, 17:7–16. Waylett thus discloses "*a system*." Ex. 1003, ¶¶ 89-94.

b. A First DMA Server

Claim 1 also recites "*a first distributed mobile architecture server*." Waylett discloses this limitation. Ex. 1003, ¶¶ 95-100.

Figure 11 of Waylett includes multiple NIBs, 224A and 224B. Waylett describes that a Network-In-A-Box, like NIB 224, is a single enclosure that allows a UE to communicate with a private cellular networks:

> The communication system 200 further includes a private network 220 with a private cellular network 222 for communicating with private MS 226, a WLAN 228 for communicating with private transceivers or UEs 230, and, optionally, a PBX 232 for communicating with PBX telephones 234. In one embodiment, the private cellular network 222 includes at least one WAVEXchange™ (WXC) or a Network-In-A-Box™ (NIB 224) commercially available from interWAVE Communications Inc., of Menlo Park, Calif. . . . ***The NIB 224 includes a MSC, a BSC and a BTS in a single enclosure. The private cellular network 220 is coupled to the GSM network 210, the GPRS network 218, and the 3G-network 214 of the public cellular network 204 through a number or interface functions or links, described in more detail below.***

Ex. 1005, 9:32-46 (emphasis added); Ex. 1003, ¶ 97. This mirrors how the '763 Patent describes "*distributed mobile architecture server* ("*DMA*") *server*." Ex. 1003, ¶¶ 97–98. Accordingly, a skilled artisan would have recognized that each NIB is a "*distributed mobile architecture server* ("*DMA*") *server*." Ex. 1003, ¶ 99. Annotated Figure 11 below shows that the NIB 224A satisfies the "*first distributed mobile architecture server*" in the system:

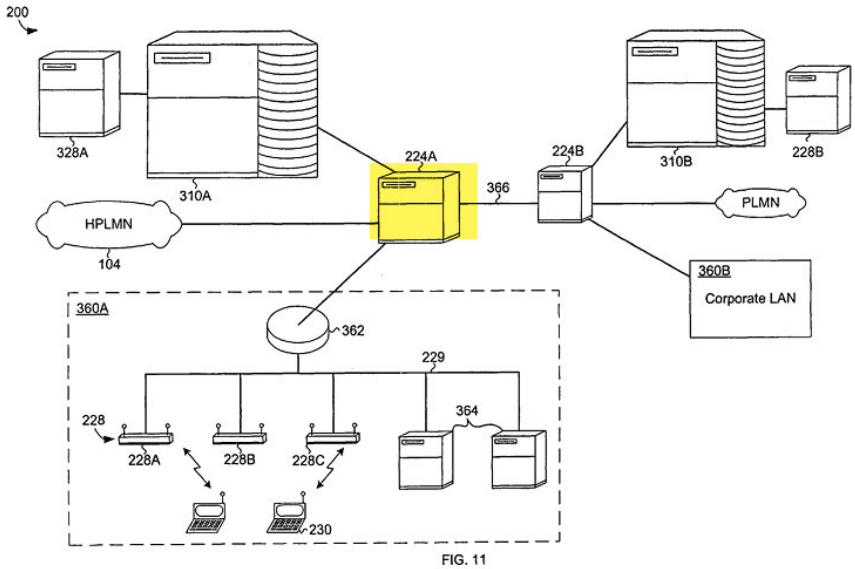

Ex. 1005, Fig. 11 (annotated); Ex. 1003, ¶ 97. Waylett thus discloses this limitation. Ex. 1003, ¶¶ 95-100.

c. A First Computer Readable Medium

Claim 1 additionally recites "*a first computer readable medium.*" Waylett discloses this limitation. Ex. 1003, ¶¶ 101–110.

Waylett discloses that each NIB includes a "*computer readable medium.*" Ex. 1003, ¶ 103. In particular, Waylett describes that a Network-In-A-Box contains a single enclosure that includes a mobile switching center, base station controller, and base station transceiver:

> The NIB 224 includes a MSC, a BSC and a BTS in a single enclosure. The private cellular network 220 is coupled to the GSM network 210, the GPRS network 218, and the 3G-network 214 of the public cellular network 204

> through a number or interface functions or links, described in more detail below.

Ex. 1005, 9:32-46; Ex. 1003, ¶ 103. With this implementation, a skilled artisan would have recognized that, to implement such functionality, the NIB 224 must necessarily include a computer readable medium. Ex. 1003, ¶ 104. For example, Waylett describes a commercially available system—that is, interWAVE Communications' Network-In-A-Box™ (NIB 224)—that implements its components (*e.g.*, MSC, BSC, RADIUS server, HLR, VLR, etc.) using software on a computer readable medium. *See* Ex. 1010 ("[interWAVE] has pioneered a product suite that provides all of the infrastructure equipment and software necessary to support an entire wireless network within a single compact system [referring to its Network-In-A-Box]."); Ex. 1003, ¶ 104. Accordingly, Waylett discloses this limitation. Ex. 1003, ¶ 104.

To the extent that Patent Owner disagrees, such an implementation of the NIB components (*e.g.*, MSC, BSC, RADIUS server, HLR, VLR, etc.) on a computer readable medium in a NIB would have been obvious. Ex. 1003, ¶¶ 105–110. Implementing Waylett's NIB components on a computer readable medium would have been obvious because it was an obvious variation of implementing known components in the prior art. Ex. 1003, ¶ 106; *KSR Intern. Co. v. Teleflex Inc.*, 550 U.S. 398, 417 (U.S. 2007) (obvious if no "more than the predictable use of prior art elements according to their established functions"). Moreover, applying

this known technique—that is, an implementation on a computer readable medium—to Waylett's NIB components would result in similar improvements and not have been beyond the skill of an ordinary artisan. Ex. 1003, ¶ 107; *KSR*, 550 U.S. at 401 ("[I]f a technique has been used to improve one device, and a person of ordinary skill in the art would recognize that it would improve similar devices in the same way, using the technique is obvious unless its actual application is beyond that person's skill."). Thus, implementing Waylett's NIB components on a "*computer readable medium*" would have been obvious.

Alternatively, a skilled artisan would have been motivated to implement Waylett's NIB components in a computer readable medium for two additional reasons. Ex. 1003, ¶¶ 108–109. First, such a person would do so to make manufacturing NIBs cost-effective because one would replicate the software in each NIB as opposed to designing a new hardware component. Ex. 1003, ¶ 108. In addition, a skilled artisan would have been motivated to implement Waylett's NIB components in a computer readable medium to allow for easy implementation of system-wide updates. Ex. 1003, ¶ 109. Such a person would have recognized that software updates can be sent over the internet, rather than having to update the hardware in each NIB. Ex. 1003, ¶ 109. For either reason, a skilled artisan would have been motivated to implement Waylett's NIB components in a computer readable medium. Ex. 1003, ¶¶ 108–110.

d. A First MSC

Claim 1 also recites "*a first mobile switching center module embedded in the first computer readable medium*."

Waylett discloses this limitation. Ex. 1003, ¶¶ 111-113. Waylett discloses that each NIB includes a "*computer readable medium*" that includes a "*mobile switching center module*." Ex. 1003, ¶ 113. Specifically, Waylett describes that a network in a box contains a single enclosure that includes a mobile switching center. Ex. 1005, 9:41-42 ("The NIB 224 includes a ***MSC***, a BSC and a BTS in a single enclosure."); Ex. 1005, 7:59 (stating that MSC stands for mobile switching center). Ex. 1003, ¶ 113. As explained above, such functionality necessarily requires implementation on a computer readable medium. Ex. 1003, ¶ 113. To the extent that Patent Owner disagrees, and as explained above, such an implementation on a computer readable medium would have been obvious. Ex. 1003, ¶ 113. Because this module is located in the computer readable medium in the first NIB, it would be a "*first*" MSC located in "*the first computer readable medium*." Ex. 1003, ¶¶ 111-113.

e. A First BSC

Claim 1 further recites "*a first base station controller module embedded in the first computer readable medium.*"

Waylett discloses this limitation. Ex. 1003, ¶ 117. Waylett discloses that each NIB includes a "*computer readable medium*" that includes a "*base station controller module*." In one example, Waylett describes that a Network-In-A-Box contains a single enclosure that includes a base station controller module. Ex. 1005, 9:41-42 ("The NIB 224 includes a MSC, ***a BSC*** and a BTS in a single enclosure."); Ex. 1005, 7:58 (stating BSC stands for base station controller). Ex. 1003, ¶ 117. As explained above, such functionality necessarily requires implementation on a computer readable medium. Ex. 1003, ¶ 117. To the extent that Patent Owner disagrees, and as explained above, such an implementation on a computer readable medium would have been obvious. Ex. 1003, ¶ 117. Because this module is located in the computer readable medium in the first NIB, it would be a "*first*" BSC located in "*the first computer readable medium*." Ex. 1003, ¶ 117.

f. A CDR Generation Program

Claim 1 recites "*a first call detail record (CDR) generation program embedded in the first computer readable medium.*"

Waylett discloses this limitation. 1003, ¶ 121. Waylett discloses that NIB 224 also include a RADIUS server, which generates call detail records (CDRs). 1003, ¶ 121. In particular, Waylett discloses "the RADIUS server 312 receives accounting packets or call detail records (CDRs) … and forwards these accounting

packets to a billing server … to bill telecommunications charges to the appropriate parties." Ex. 1005, 14:16-22. Figure 6 shows that the RADIUS server is part of a NIB. *See* Ex. 1005, Fig. 6, RADIUS Server 312; 1003, ¶ 121. Consequently, a skilled artisan would have understood that the RADIUS server 312 located in each NIB, along with its call detail records, is a "*a call detail record (CDR) generation program embedded within the computer readable storage medium*." 1003, ¶ 121. To the extent that Patent Owner disagrees, and as explained above, such an implementation on a computer readable medium would have been obvious. Ex. 1003, ¶ 121. Because the RADIUS server is included in the computer readable medium in the first NIB, it would be a "*first*" CDR generation program located in "*the first computer readable medium*." Ex. 1003, ¶ 121.

g. A First Wireless Transceiver

Claim 1 recites "*wherein the first distributed mobile architecture server is in direct physical connection with a first wireless transceiver.*"

Waylett discloses this limitation. Ex. 1003, ¶ 125. Waylett describes that NIB 224 "includes a MSC, a BSC and a BTS in a single enclosure." Ex. 1005, 9:41–42. A skilled artisan would have understood that a "BTS" mentioned in this sentence refers to a "base station transceiver," which is a "*wireless transceiver*." Ex. 1003, ¶ 125; *see* Ex. 1005, Abstract (showing acronym for "CBTS" is "centralized base transceiver station"). Such a person would further understand that

the BTS in NIB 224 is used to receive calls from UEs, making it "*in direct physical connection with a first wireless transceiver*." Ex. 1003, ¶ 125; Ex. 1005, 9:37-46 (describing "the private cellular network 222 includes … a Network-In-A-Box™ (NIB 224) [that] includes … a [base transceiver station] BTS" and further that "[t]he private cellular network 220 is coupled to the GSM network 210, the GPRS network 218, and the 3G-network 214 of the public cellular network 204 through a number or interface functions or links"). Accordingly, Waylett's NIB is "in direct physical connection" with a BTS because the NIB includes a BTS. Ex. 1003, ¶ 125.

Waylett also discloses other embodiments where the NIB 224 is directly connected to other BTS's. Ex. 1003, ¶ 126. For example, Figure 6 of Waylett shows that the NIB is directly connected to BTS 268:

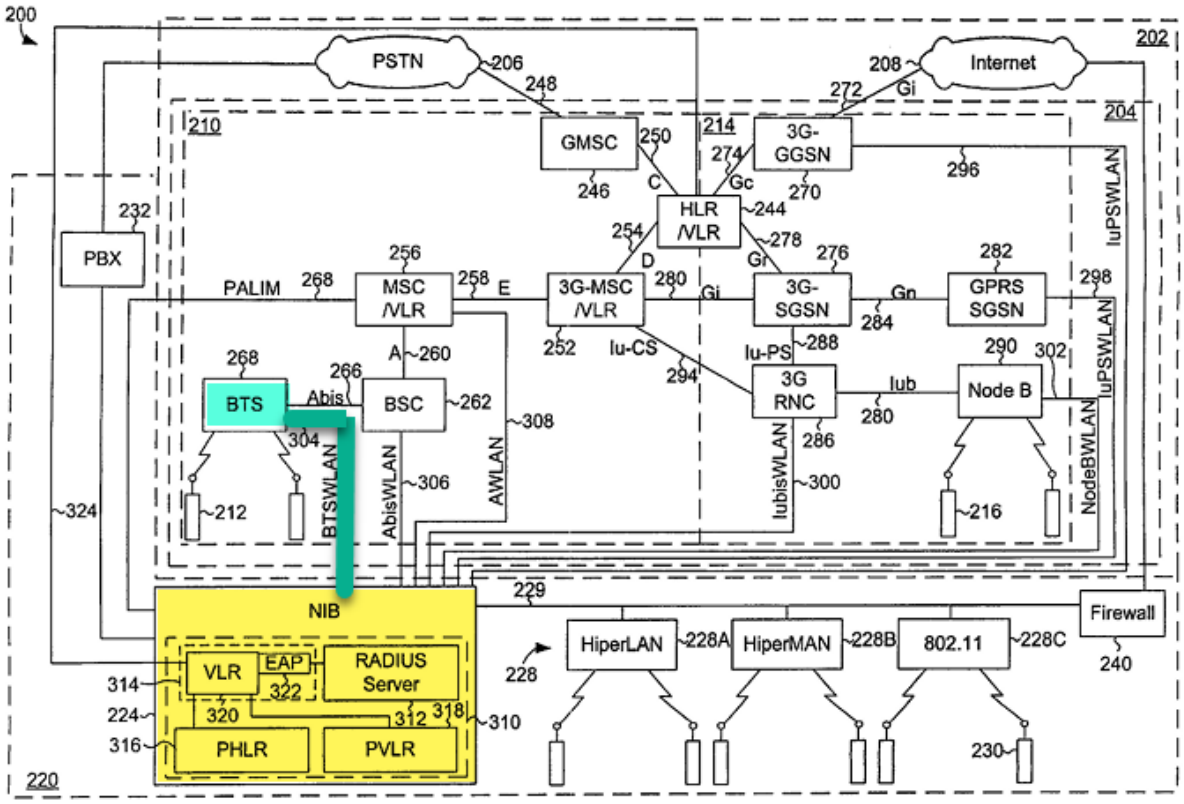

FIG. 6

Ex. 1005, Fig. 6 (annotated), 13:49-55, Ex. 1003, ¶ 126. Accordingly, Waylett's NIB is also "*in direct physical connection*" with a BTS located outside the NIB. Ex. 1003, ¶ 126.

Either of these implementations show that Waylett teaches this limitation. Ex. 1003, ¶¶ 125–126

h. A Second DMA Server

Claim 1 recites "*a second distributed mobile architecture server.*"

Waylett discloses this limitation. Ex. 1003, ¶ 130. Figure 11 of Waylett includes two Networks-In-A-Box: NIBs 224A and 224B. Ex. 1005, Fig. 11. A skilled artisan would have recognized that each of these NIB is a "*distributed*

mobile architecture server ("*DMA*") *server*." Ex. 1003, ¶ 130. Such a person would have also recognized that each NIB would have the same structural arrangement, components, and functionality. Ex. 1003, ¶ 130. Annotated Figure 11 below shows that the NIB 224B satisfies the "*second distributed mobile architecture server*" in the system:

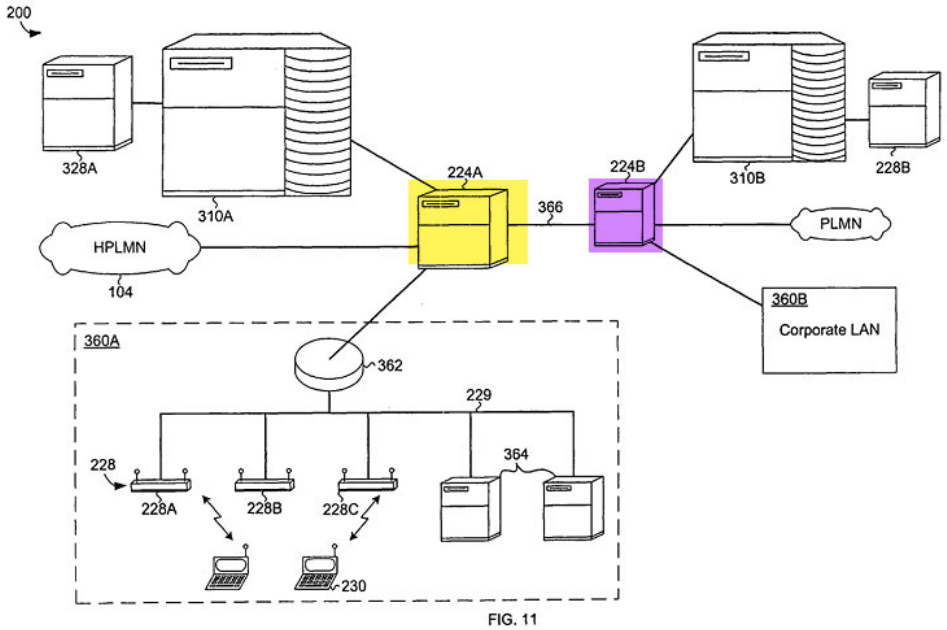

Ex. 1005, Fig. 11 (annotated); Ex. 1003, ¶ 130. As shown in the annotated picture above, the second NIB 224B (a "*second distributed mobile architecture server*") is shown in purple and the first NIB 224A (a "*first distributed mobile architecture server*") is shown in yellow. Ex. 1003, ¶ 130. Waylett thus discloses "*a second distributed mobile architecture server.*" Ex. 1003, ¶ 130

i. A Second Computer Readable Medium

Claim 1 recites "*a second computer readable medium*." As explained above, *see* § V.B.1.c, Waylett's NIBs include a computer readable medium. Ex. 1003, ¶ 134. To the extent Patent Owner argues otherwise, it would have been obvious for the same reasons explained above, *see* § V.B.1.c. Ex. 1003, ¶ 134. Because this computer-readable medium would be located in the second NIB, this computer readable medium would be a "*second computer readable medium*." Ex. 1003, ¶ 134.

j. A Second MSC

Claim 1 recites "*a second mobile switching center module embedded in the second computer readable medium*." Waylett discloses this limitation for the same reasons described above, *see* § V.B.1.d. Ex. 1003, ¶ 137. Because this module would be located in the second NIB, this would be the "*second*" MSC located in the "*second computer readable medium*." Ex. 1003, ¶ 137.

k. A Second BSC

Claim 1 recites "*a second base station controller module embedded in the second computer readable medium.*" Waylett discloses this limitation for the same reasons described above, *see* § V.B.1.e. Ex. 1003, ¶ 140. Because this module would be located in the second NIB, this would be the "*second*" BSC located in the "*second computer readable medium*." Ex. 1003, ¶ 140.

l. A Second Call Detail Record Generation Program

Claim 1 recites "*a second call detail record (CDR) generation program embedded in the second computer readable medium.*" Waylett discloses this limitation for the same reasons described above, *see* § V.B.1.f. Ex 1003, ¶ 143. Because this module would be located in the second NIB, this would be the "*second*" CDR located in the "*second computer readable medium*." Ex 1003, ¶ 143.

m. A Group Call Program

Claim 1 recites "*a program to allow a group call among four or more mobile communication devices, wherein the program is embedded in the second computer readable medium.*"

Waylett discloses this limitation. Ex. 1003, ¶¶ 147–149. Waylett discloses that the UE can use supplementary services, which include "Voice Group Call Service." Ex. 1005, 4:38–53; Ex. 1003, ¶ 147. A skilled artisan would have recognized that these services would include hosting a group call across multiple mobile devices, including groups of four or more mobile devices. Ex. 1003, ¶¶ 147–148. Such a person would have recognized that, to provide such services, the NIB 224 would necessarily need to include a program to allow for such services. Ex. 1003, ¶ 147. Consequently, NIB 224 includes "*a program to allow a group*

call among four or more mobile communication devices" in its computer readable medium. Ex. 1003, ¶ 147.

Although there is no size of a group mentioned in Waylett, a skilled artisan would have recognized that a group (call) services, like those mentioned in Waylett, allow for a call among four or more mobile communication devices. Ex. 1003, ¶ 148. This understanding is consistent with the GSM standard about Voice Group Call Services. Ex. 1009, 10, *see id.*, 6–9, 11–14; Ex. 1003, ¶ 148. Because Waylett describes group call services, *see* Ex. 1005, 4:38-53, a skilled artisan would have understood this to refer to "*group call*[*s*] *among four or more mobile communication devices*." Ex. 1003, ¶ 148.

n. A Second Wireless Transceiver

Claim 1 recites "*wherein the second distributed mobile architecture server is in direct physical connection with a second wireless transceiver.*"

Waylett discloses this limitation for the same reasons described above, *see* § V.B.1.g. Ex 1003, ¶ 151. Because this base station transceiver would be located in the second NIB, this would be the "*second*" wireless transceiver in "*direct physical connection with the second distribute mobile architecture server*." Ex 1003, ¶ 151.

o. Peer-to-peer connection for telephony traffic.

Claim 1 recites "*wherein telephony traffic received at the first wireless transceiver of the first distributed mobile architecture server is transmitted from the*

first distributed mobile architecture server to the second distributed mobile architecture server via a peer-to-peer connection."

Waylett discloses "*wherein telephony traffic received at the first wireless transceiver of the first distributed mobile architecture server is transmitted from the first distributed mobile architecture server to the second distributed mobile architecture server*." Waylett does not, however, expressly disclose that such a transmission of telephony traffic occurs over a "*peer-to-peer connection*." Waylett in view of Cope would have rendered a "*peer-to-peer connection*" between Waylett's NIBs obvious as further explained below.

i. Waylett discloses a connection for telephony traffic

Waylett discloses this limitation, except for a "*peer-to-peer connection*." Ex. 1003, ¶¶ 154–157. Specifically, Waylett discloses that its NIBs send telephony traffic to each other. *See* Ex. 1005, 9:48-64, 12:21-27; Ex. 1003, ¶ 154. In doing so, Waylett's NIBs enable voice and data communications between UEs, both inside and outside the private network:

> [T]he WLAN 228 is coupled to the public network 202 ***through the NIB 224 and is adapted to enable voice and data communication*** between the private UEs 230 and the private mobile stations 226, public mobile stations 212, public UEs 216, PBX telephones 234, and telephones (not shown) coupled to the PSTN 206 and/or the Internet 208.

> . . . One advantage of the communication system 200 of the present invention is the ability to enable communication between the public network 202 and less expensive, low-power, unregulated private UEs 230 while providing substantially the same functions and services available from much more expensive radios, MSs 212 or UEs 216 of the public cellular network 204 and/or private cellular network 222.

Ex. 1005, 9:48-64 (emphasis added); Ex. 1003, ¶¶ 154-155; *see* Ex. 1005, 3:8-16, 4:11-28; 17:10–11 (showing that NIBs linked via private wide area network). As the above disclosures show, a skilled artisan would have recognized that UEs would transmit voice traffic—one type of "*telephony traffic*"—to a wireless transceiver of a NIB. Ex. 1003, ¶ 156. When there are multiple NIBs, such as those in Waylett's Figure 11, a skilled artisan would have understood how a UE connected to a first NIB would call a second UE connected to a second NIB. Ex. 1003, ¶ 156; Ex. 1005, 9:48-64; *id.,* 9:65-10:7 ("It will be understood, that the communication system 200 can include a number of private cellular networks 222, each with an associated WLAN 228, and each linked by a private wide area network (PWAN) (not shown) to provide wireless or cellular type communication via a WLAN over an extended service area. This embodiment provides the further advantages of the ability to avoid tolls and maintain ownership and control of information transmitted between different sites of an enterprise linked by the PWAN."). As part of this process, the

NIBs would establish a connection to provide the call and/or data communications between each NIB. Ex. 1003, ¶ 156; Ex. 1005, Fig. 11, 9:48-10:7, 17:7-16. In doing so, a skilled artisan would have recognized that a call from a first UE located in a network with a first NIB to another UE located in another network with a second NIB will necessarily include the following: (i) a UE call received by the first wireless transceiver connected to the first NIB, *see* Ex. 1005, 3:8-16, 9:48-64, and (ii) that call being relayed from the first NIB to the second NIB, Ex. 1005, Fig. 11, 9:48-10:7, 17:7-16, and (iii) the second NIB further relaying that call (using the wireless transceiver connected to the second NIB) to the second UE, *see* Ex. 1005, 4:11-28, 9:48-64. Ex 1003, ¶ 156. Accordingly, Waylett discloses this limitation with the exception of a peer-to-peer connection. Ex 1003, ¶ 156

ii. Cope discloses a peer-to-peer connection.

Cope discloses a "*peer-to-peer connection*" (referred to as a "P2P connection"). Ex 1003, ¶¶ 156–161. Cope discloses that two different service providers exchange telephony traffic using a peer-to-peer connection, shown in Figure 4 below:

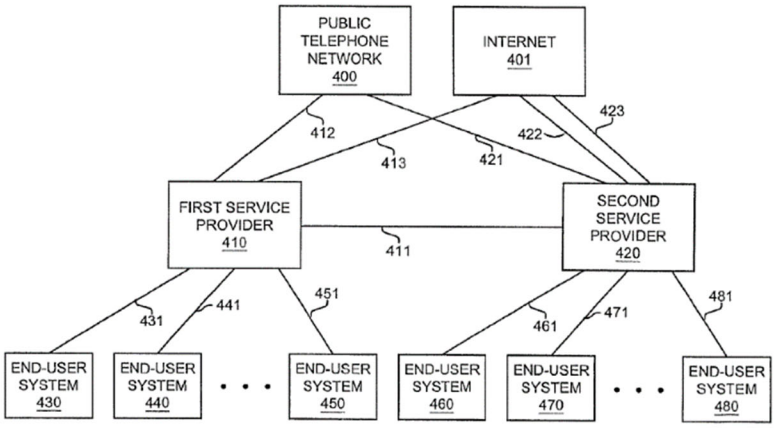

FIG. 4

Ex. 1006, Fig. 4, 3:56-4:3; 6:28-40; Ex 1003, ¶ 158. Further, Cope describes that service providers establish a peer-to-peer connection to each other using their routers:

> FIG. 5 illustrates second service provider 420 in the prior art. Second service provider 420 includes router 512, packet telephony network 513, and service portal 514. Router 512 is coupled to peer-to-peer IP connection 411 to first service provider 410.

Ex. 1006, 6:28-32; Ex. 1003, ¶ 159. Accordingly, a skilled artisan would have recognized that Cope discloses a "*peer-to-peer connection*" between different service providers that relays "*telephony traffic*." Ex. 1003, ¶ 158.

iii. A POSITA Would Have Found It Obvious to Include Cope's P2P Connection in Waylett's Communication System

A skilled artisan would have considered the systems described in Waylett in conjunction with those described in Cope, as both concern analogous art. Ex. 1003,

¶ 162. Both belong to the same field of endeavor—that is, telecommunication over wireless networks. Ex. 1005, 1:8–10; Ex. 1006, 1:22–26; Ex. 1001, 1:7–50; Ex. 1003, ¶ 162. Likewise, both Cope and Waylett are pertinent to the problem being solved by the inventor of the ’763 patent: “there exists a need for an improved communications system that is relatively inexpensive to deploy and relatively inexpensive to operate.” Ex. 1001, 1:48–50; Ex. 1005, 1:32-69; Ex. 1006, 3:24-53; Ex. 1003, ¶ 162.

A skilled artisan would have been motivated to incorporate Cope’s P2P connections in the system of Waylett for three reasons. Ex. 1003, ¶ 163-167. Cope provides the first two express reasons to modify Waylett to include a P2P connection. Ex. 1003, ¶ 164. For one, Cope explains that P2P connections “dramatically expands end-user choice and stimulates meaningful competition at the service level,” as well as “numerous other advantages.” Ex. 1006, 3:65-4:3; Ex. 1003, ¶ 164. Second, Cope also explains that peer-to-peer connections allow for “far more efficient” routing of IP traffic through an internet gateway and over the internet to other service providers. Ex. 1006, 3:17-20, *see id.*, 3:4-20; Ex. 1003, ¶ 164. Either express reason in Cope would have motivated a skilled artisan to use a P2P connection between the NIBs in Waylett’s Figure 11. Ex. 1003, ¶ 164.

Next, both Waylett and Cope focus on helping expand networks to remote areas. Ex. 1003, ¶ 165. Waylett, for example, explains that "there is a need for an inexpensive communication system and method of operating the same, that are capable of providing voice and high speed data communication to users in communities hitherto un-served or under served by conventional communication systems." Ex. 1005, 3:3-7; Ex. 1003, ¶ 165. Cope explains how peer-to-peer IP connections provide a solution to this need: "[f]or a service provider with many existing peer-to-peer IP connections, the technology greatly expands potential service coverage areas—even to end-users in remote areas." Ex. 1006, 4:6-9; Ex. 1003, ¶ 165. Accordingly, a skilled artisan would be motivated to implement a peer-to-peer IP connection, as described by Cope, between Waylett's NIBs to further Waylett's express goal of providing voice and high-speed data communication to users in un-served or under-served communities. Ex. 1003, ¶ 165.

Finally, a skilled artisan would have recognized that P2P connections were well-known at the time. Ex. 1003, ¶ 166. As early as 2001, Cope describes that peer-to-peer IP connections were known and conventional. Ex. 1006, 2:35–3:21 (describing "Peer-to-Peer IP connections in the Prior Art"); Ex. 1003, ¶ 166. A skilled artisan would have recognized that using peer-to-peer connections for Waylett's telephony traffic was nothing more than the simple substitution of one

known element (i.e., a peer-to-peer IP connection) for another (i.e., the connection between NIBs in Waylett's Figure 11). Ex. 1003, ¶ 166; *KSR*, 550 U.S. at 401.

For any of these reasons, a skilled artisan would have found it obvious to connect Waylett's NIBs using Cope's P2P connections. Ex. 1003, ¶¶ 162-167.

2. Claims 4 and 6

Claim 4 depends on Claim 1 and further recites "*wherein the first distributed mobile architecture server further comprises: a first home location register embedded in the first computer readable medium; and a first visitor location register embedded in the first computer readable medium*." Likewise, Claim 6 depends on claim 1 and further recites "*the second distributed mobile architecture server"* has the same requirements.

Waylett discloses these limitations, as each of its two NIBs both include both the claimed "*home location register*" and "*visitor location register embedded in the first computer readable medium*."

a. Home Location Register

Waylett discloses that each NIB 224 includes "*a first home location register embedded in the first computer readable medium*." Ex. 1003, ¶¶ 170–173

Figure 6 of Waylett discloses that the RADIUS system 310 of an NIB includes a private home location registry ("PHLR"):

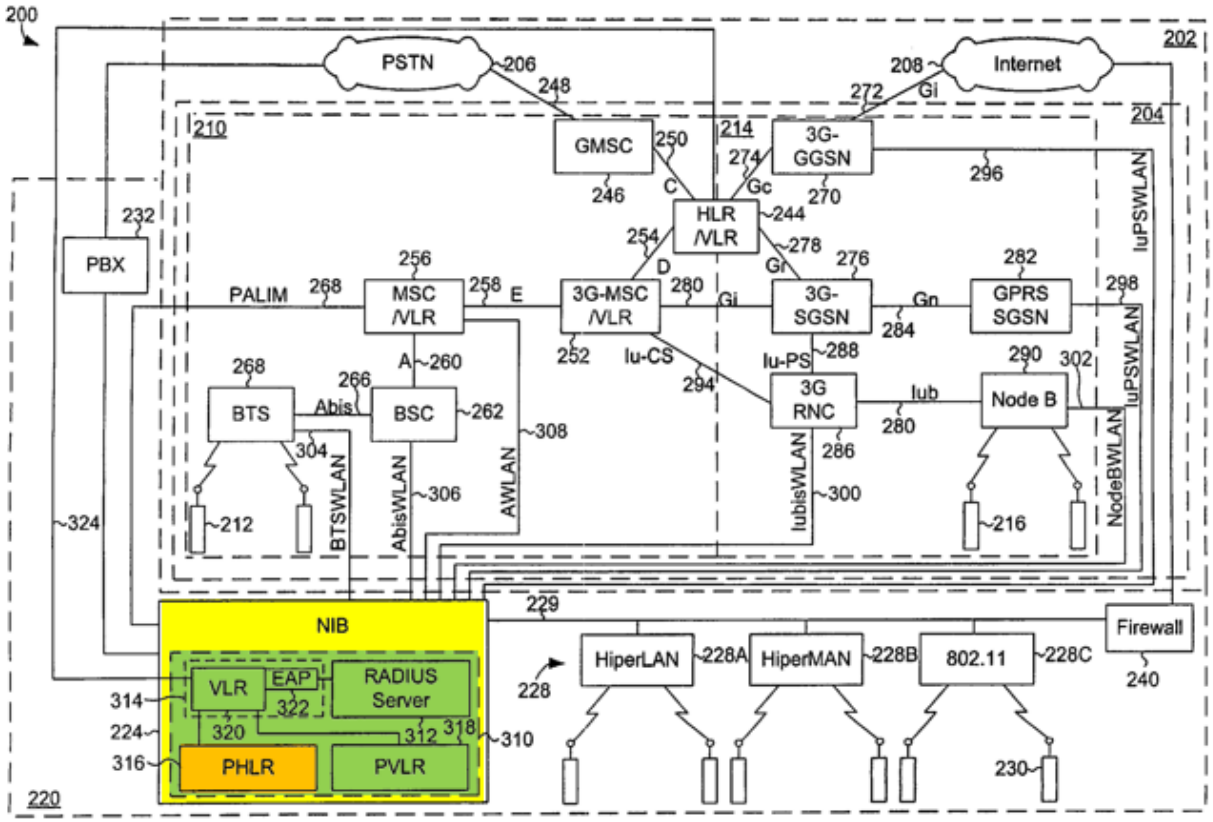

FIG. 6

Ex. 1005, Fig. 6 (annotated), Ex. 1003, ¶ 171. Waylett further discloses that "[t]he private HLR 316 is [sic] stores information on UEs 230 registered or subscribing to the communication system 200, and more particularly to the WLAN 228 and/or the private cellular network 222." Ex. 1005, 14:32-35. Accordingly, a skilled artisan would have recognized that Waylett's private HLR is "*a first home location register embedded in the first computer readable medium.*" Ex. 1003, ¶¶ 171–172.

b. Visitor Location Register

Waylett discloses that each NIB 224 includes "*a first visitor location register embedded in the first computer readable medium.*" Ex. 1003, ¶¶ 174–176.

Figure 6 of Waylett likewise discloses that the same RADIUS system 310 includes a private home visitor location registry ("PVLR"):

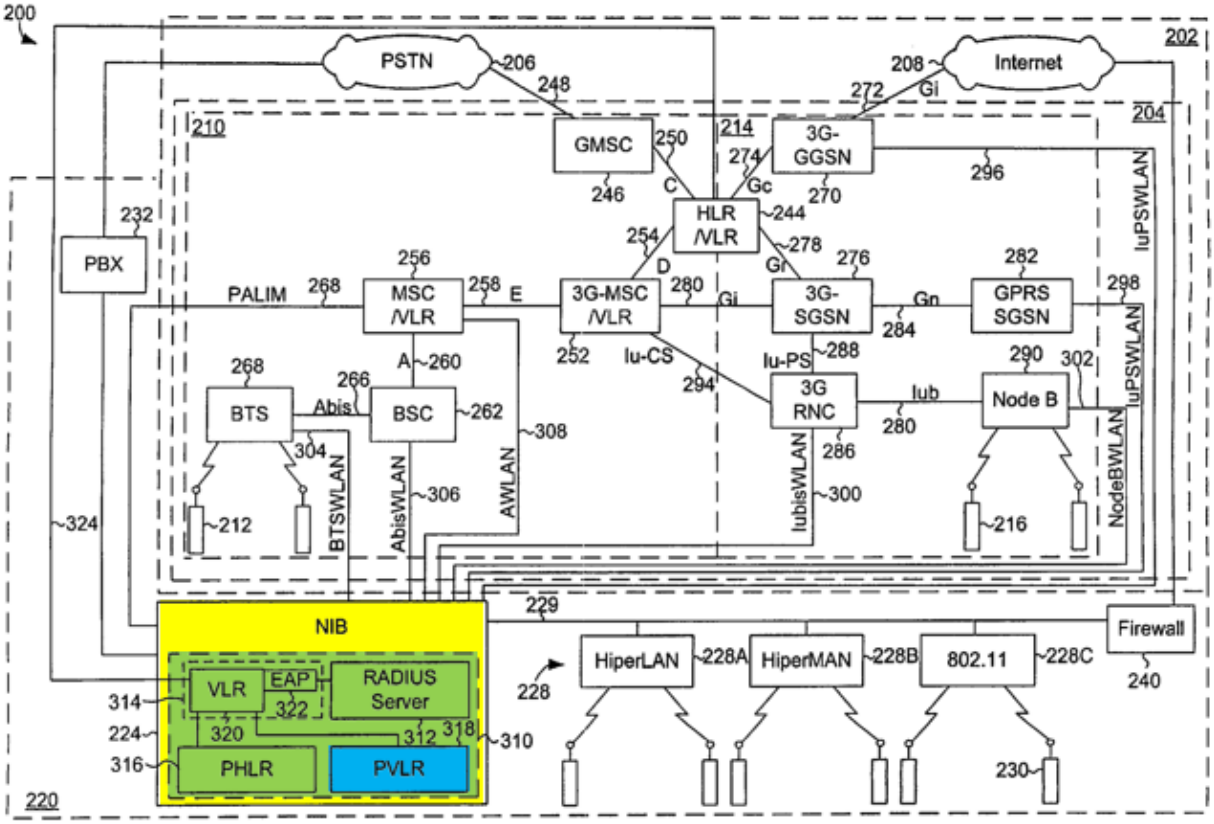

FIG. 6

Ex. 1005, Fig. 6 (annotated), Ex. 1003, ¶ 175. Waylett further discloses that "[t]he private VLR 318 is capable of temporarily storing information on subscribers or UEs 230 considered as roaming within the service area of the WLAN 228." Ex. 1005, 14:35-38. Alternatively, Waylett discloses a VLR 320 in the NIB. Ex. 1005, Fig. 6, VLR 320, 14:38-48; Ex. 1003, ¶ 175. Accordingly, a skilled artisan would have recognized that either Waylett's private VLR 318 or VLR 320 satisfies "*a*

visitor location register embedded in the first computer readable medium." Ex. 1003, ¶ 175.

3. Claim 9

Claim 9 depends on Claim 1 and further recites: "*wherein the first distributed mobile architecture server includes administrative information corresponding to one or more wireless telephone device subscribers.*"

Waylett discloses this limitation. Ex. 1003, ¶¶ 177–182. Figure 6 of Waylett discloses that a RADIUS system 310 includes a RADIUS Server 312:

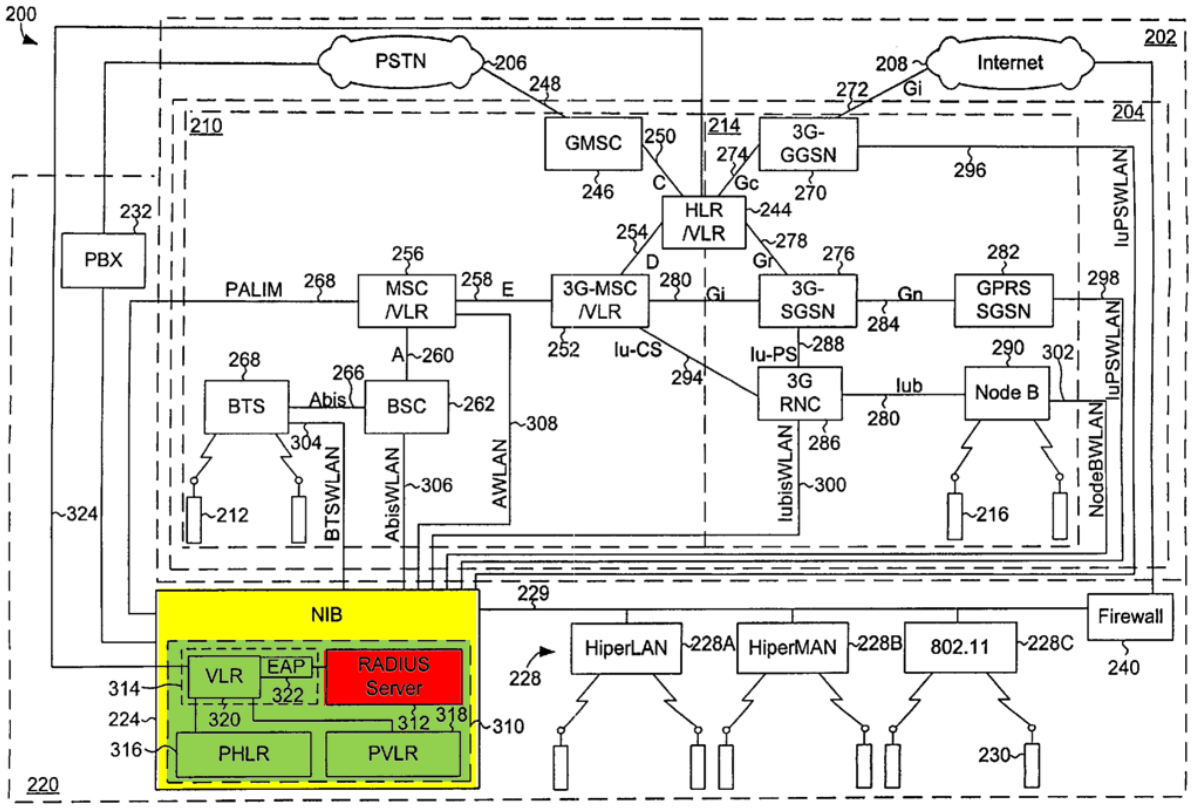

FIG. 6

Ex.1005, Fig. 6 (annotated), Ex. 1003, ¶ 179. When Waylett's system includes a "distributed public HLR/VLR" or "distributed private HLR," Ex. 1005, 14:62-64,

Waylett discloses that the RADIUS server 312 "routes an interpretation of either a username or a user identity provided in the authentication procedure, to the appropriate public or private HLR." Ex. 1005, 14:64-66; Ex. 1003, ¶ 179. To do so, Waylett discloses that RADIUS server 312 uses a "configuration table that matches the [International Mobile Subscriber Identity] ranges with the appropriate or controlling public or private HLR," Ex. 1005, 14:67–15:8; 21:25-36. Stated otherwise, a skilled artisan would have understood that Waylett's RADIUS server 312 uses a table of subscriber identities to send user information to the appropriate HLR during the authentication procedure. Ex. 1003, ¶ 180. Waylett's configuration tables thus includes "*administrative information corresponding to one or more wireless telephone device subscribers*." Ex. 1003, ¶ 180.

Alternatively, Waylett also discloses "a memory system … coupled to the NIB 224" for storing subscriber identification and security information. Ex. 1005, 10:45-48. Accordingly, such a person would have recognized that Waylett's subscriber identification and security information is "*administrative information corresponding to one or more wireless telephone device subscribers*." Ex. 1003, ¶ 181.

4. Claim 15

Claim 15 depends on Claim 1 and further recites: "*wherein the first base station controller module embedded in the first computer readable medium of the*

first distributed mobile architecture server comprises a first cellular radio network controller."

Waylett renders this limitation obvious. Ex. 1003, ¶ 183–190. Waylett also discloses that NIB 224 connects to an external 3G RNC 286 ("*first cellular radio network controller*"):

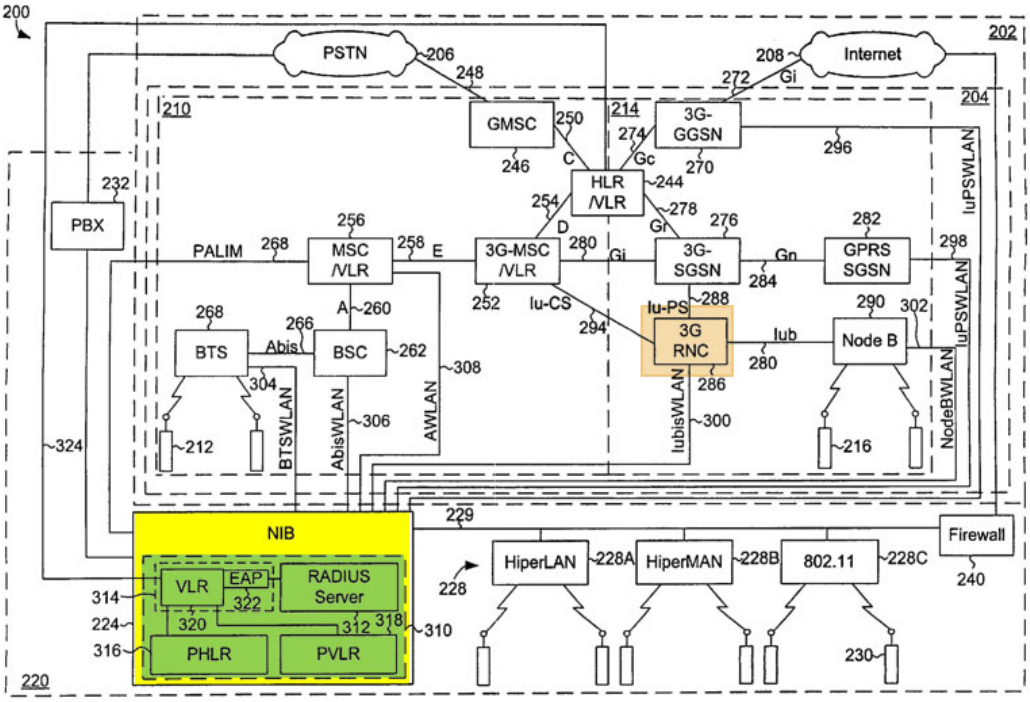

FIG. 6

Ex. 1005, Fig. 6 (annotated); Ex. 1003, ¶ 185; Ex. 1005, 15:57-58 ("[T]he 3G-RNC 286 through the NIB 224 and via an [Iubis 802.11] interface or link 342"). A skilled artisan would have recognized that the RNC controls NIB 224, as well as other Node Bs, for communication over 3G wireless networks. Ex. 1003, ¶ 185; Ex. 1005, 13:19-20 ("Each 3G-RNC 286 controls one or more Node Bs 190 through an Iub interface or link 292."). Waylett also describes that a network in a

box contains a single enclosure that includes other modules for communicating over cellular networks, as well. Ex. 1005, 9:41-42 ("The NIB 224 includes a MSC, a BSC and a BTS in a single enclosure."); Ex. 1003, ¶ 185. Accordingly, Waylett discloses an NIB that includes most of the modules needed for communicating over 3G cellular networks. Ex. 1003, ¶ 185.

A skilled artisan would have been motivated to modify Waylett's NIB to further include a "*radio network controller*" for two reasons. Ex. 1003, ¶ 186. First, such a person would have been motivated to do so for express reasons described in Waylett. Ex. 1003, ¶ 186. Waylett's NIB is an "inexpensive communication system" that is "capable of providing voice and high-speed data communication to users in communities hitherto un-served or under served by conventional communication systems." Ex. 1005, 2:3-7. Waylett's NIB already includes most of the necessary modules needed to for communicating over 3G networks. Ex. 1005, Fig. 5; Ex. 1003, ¶ 186. Part of these communication systems would also include a "radio network controller," as shown above. Ex. 1003, ¶ 186. A skilled artisan would have recognized that, by including the radio network controller module in Waylett's NIB, the resulting cost to the customer would be reduced because they would no longer need to purchase a 3G-RNC 266. Ex. 1003, ¶ 186.

Second, Waylett also discloses there is a "need for a communication system and method of operating the same that can be quickly and inexpensively scaled up to provide service to increasing numbers of users." Ex. 1005, 2:8-11. A skilled artisan would have recognized that, by including the "radio network controller" in Waylett's NIB 224, that radio network controller would be able to control other NIBs. Ex. 1003, ¶ 187. This modification would allow for additional expansion of a network where a single NIB controls all newly added NIBs. Ex. 1003, ¶ 187. A skilled artisan would have benefited by having a single NIB control the network because all network configuration can be performed in a single location—rather than at multiple locations. Ex. 1003, ¶ 187.

For either reason above, a skilled artisan would have been motivated to include radio network controller in Waylett's NIB 224. Ex. 1003, ¶¶ 185–188. As explained above, *see* § V.B.1.e, Waylett discloses that each NIB includes a "*computer readable medium*" that includes a "*base station controller module*." Ex. 1003, ¶ 188. Because the base station controller communicates with the radio network controller, such a person would have recognized that both components would be included in the same module. Ex. 1003, ¶ 188.

C. No Secondary Considerations Exist

No secondary indicia of non-obviousness exist. Petitioners reserve the right to respond to any assertion of secondary indicia of non-obviousness advanced by Patent Owner.

VI. The Parallel District Court Proceeding Does Not Warrant a Discretionary Denial

Under the Director's interim procedure for evaluating requests for discretionary denial under 35 U.S.C. § 314(a), regardless of any factors that otherwise apply, "the PTAB will not discretionarily deny institution of an IPR or PGR in view of parallel district court litigation where a petitioner stipulates not to pursue in a parallel district court proceeding the same grounds as in the petition or any grounds that could have reasonably been raised in the petition." *Interim Procedure for Discretionary Denials in AIA Post-Grant Proceedings with Parallel District Court Litigation*, 7 (USPTO Dir. June 21, 2022).

Petitioners stipulate that, should the Board institute review, Petitioners will not pursue in parallel district court proceedings the same grounds as in the Petition or any grounds that could have reasonably been raised in the petition. Thus, the Board should not exercise discretion to deny institution under section 314(a).

VII. Mandatory Notices

A. Real Parties-in-Interest

Petitioners are the real parties-in-interest. No other party had access to or control over the present Petition, and no other party funded or participated in preparation of the present Petition.

B. Related Proceedings

No previous IPR or post-grant proceeding has been filed challenging the '763 patent. The '763 Patent has been asserted by Patent Owner in the following district court litigation: *Lemko Corporation v Microsoft Corporation*, No. 3-22-cv-00363 (N.D. Tex.).

C. Lead and Backup Counsel

Petitioner's lead and backup counsel are:

Lead Counsel for Petitioner	Backup Counsel for Petitioner
Matthew Hopkins Winston & Strawn LLP 1901 L Street NW Washington, DC 20036 mhopkins@winston.com T: 202.282.5862, F: 202.282.5100 USPTO Reg. No. 76,273	Barry K. Shelton Winston & Strawn LLP 2121 N. Pearl Street, Suite 900 Dallas, TX 75201 T: 214.453.6500, F: 214.453.6400 bshelton@winston.com USPTO Reg. No. 43,113 Michael Rueckheim Winston & Strawn LLP 255 Shoreline Dr., Suite 520 Redwood City, CA 94065 mrueckheim@winston.com T: 650.858.6500, F: 650.858.6550 (*pro hac vice* to be filed)

D. Electronic Service

Petitioner consents to electronic service at:

EMAIL ADDRESS: Winston-MSFT-Lemko-IPR@winston.com.

VIII. Fees

The required fee is being paid electronically through P-TACTS.

IX. Conclusion

Petitioners respectfully request that the Board institute IPR and enter a final written decision finding the Challenged Claims unpatentable.

Dated: February 14, 2023

Respectfully submitted,

/ Matthew Hopkins /
Matthew Hopkins
Lead Counsel
Winston & Strawn LLP
1901 L Street NW
Washington, DC 20036
mhopkins@winston.com
T: 202.282.5862, F: 202.282.5100
USPTO Reg. No. 76,273

Barry K. Shelton
Winston & Strawn LLP
2121 N. Pearl Street, Suite 900
Dallas, TX 75201
T: 214.453.6500, F: 214.453.6400
bshelton@winston.com
USPTO Reg. No. 43,113

Michael Rueckheim
Winston & Strawn LLP

255 Shoreline Dr., Suite 520
Redwood City, CA 94065
mrueckheim@winston.com
T: 650.858.6500, F: 650.858.6550
(*pro hac vice* to be filed)

CERTIFICATE OF COMPLIANCE

This Petition complies with the word count limits set forth in 37 C.F.R. § 42.24(a)(1)(i), because this Petition contains 6,873 words, excluding the parts of the Petition exempted by 37 C.F.R. § 42.24(a)(1) and determined using the word count provided by Microsoft Word, which was used to prepare this Petition.

Dated: February 14, 2023

Respectfully submitted,

/ Matthew Hopkins /
Matthew Hopkins
Winston & Strawn LLP
1901 L Street NW
Washington, DC 20036
mhopkins@winston.com
T: 202.282.5862, F: 202.282.5100
USPTO Reg. No. 76,273

Lead Counsel for Petitioners

CERTIFICATE OF SERVICE

Under 37 C.F.R. §§ 42.6(e) and 42.105(a), this is to certify that on February 14, 2023, I caused to be served a true and correct copy of the foregoing "**PETITION FOR *INTER PARTES* REVIEW OF U.S. PATENT NO. 7,548,763**" and Exhibits 1001-1010 by Federal Express on the Patent Owner at the correspondence address of record for U.S. Patent No. 7,548,763:

Lemko Corporation
c/o Cygan Law Offices, P.C.
2300 Barrington Road, Suite 400
Hoffman Estates, IL

A courtesy copy of this Petition and supporting material was also served on litigation counsel for Patent Owner via email:

Jon B Hyland
Hilgers Graben PLLC
7859 Walnut Hill Lane
Suite 335
Dallas, TX 75230
Email: jhyland@hilgersgraben.com

/ Matthew Hopkins /
Matthew Hopkins
Winston & Strawn LLP
1901 L Street NW
Washington, DC 20036
mhopkins@winston.com
T: 202.282.5862, F: 202.282.5100
USPTO Reg. No. 76,273

Lead Counsel for Petitioners