US005594233A

United States Patent [19]

Kenneth et al.

[11] **Patent Number: 5,594,233**

[45] **Date of Patent: Jan. 14, 1997**

[54] **MULTIPLE STANDARD SMART CARD READER**

[75] Inventors: **Alexander R. Kenneth**, Dundee, Scotland; **Munther S. Mahsoub**, Yokohama, Japan

[73] Assignee: **AT&T Global Information Solutions Company**, Dayton, Ohio

[21] Appl. No.: **427,373**

[22] Filed: **Apr. 24, 1995**

[30] **Foreign Application Priority Data**

Nov. 11, 1994 [GB] United Kingdom 94228038

[51] **Int. Cl.**[6] **G06K 19/06**

[52] **U.S. Cl.** **235/492**; 235/487

[58] **Field of Search** 235/487, 492

[56] **References Cited**

U.S. PATENT DOCUMENTS

5,010,239	4/1991	Mita	235/492
5,296,892	3/1994	Shino	235/492
5,331,138	7/1994	Saroya	235/492
5,332,890	7/1994	Kitahara	235/492
5,420,412	5/1995	Kowalski	235/492
5,451,763	9/1995	Pickett et al.	235/492

Primary Examiner—Harold Pitts
Attorney, Agent, or Firm—James M. Stover

[57] **ABSTRACT**

A card reader (**16**) having a single entry slot (**18**) for cards (**2**), and an electronic control means (**35**) for controlling the operation of the reader (**16**). The reader (**16**) further includes a smart card reading section (**26**) incorporating a plurality of terminals (**34**,**38**,**36**) respectively adapted to read contact smart cards, inductive contactless smart cards and capacitive contactless smart cards. A pair of endless belts (**28**) are arranged to form a feed path (**30**) there between. A card (**2**) inserted through the entry slot (**18**) is received between the endless belts (**18**) and transported through the card reader (**16**) and positioned in the smart card reading section (**26**) so that smart card terminals (**6**,**8** or **10**) on the card (**2**) are located beneath corresponding smart card terminals (**34**,**36** or **38**) in the card reader (**16**). Data can then be read from the card (**2**) if the card (**2**) is a contact smart card, an inductive contactless smart card or a capacitive contactless smart card.

15 Claims, 3 Drawing Sheets

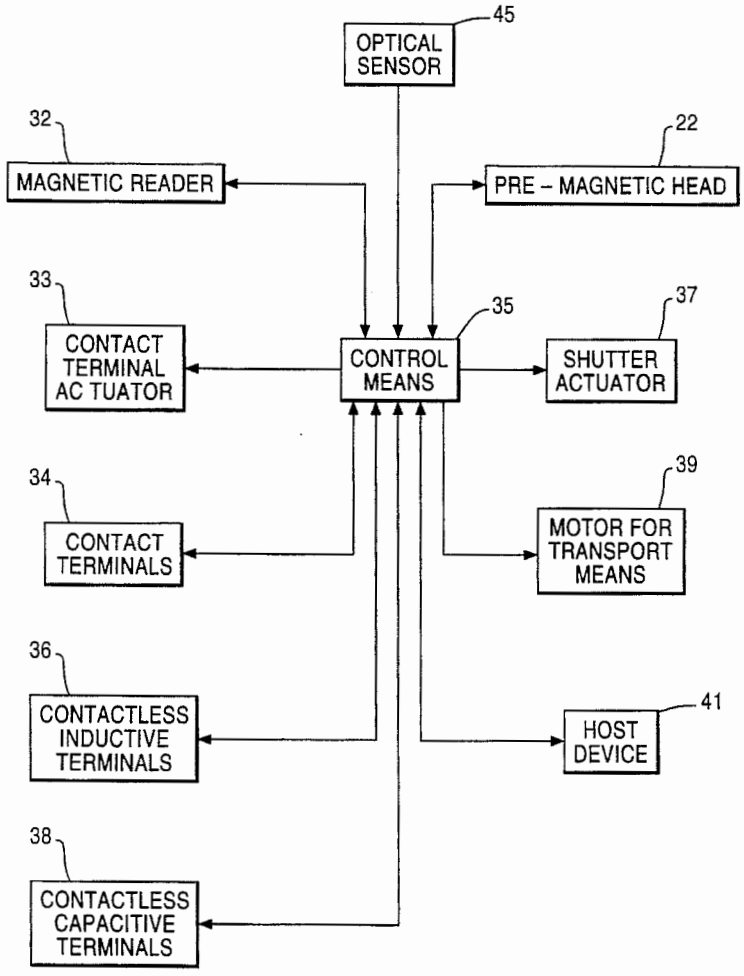

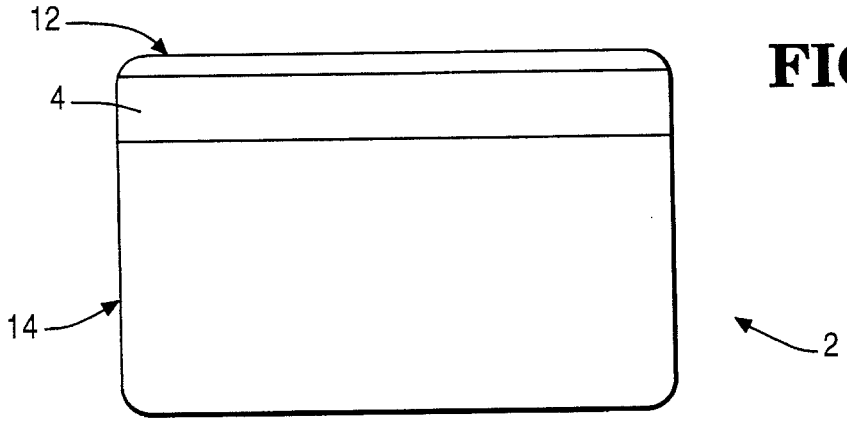

FIG. 1A

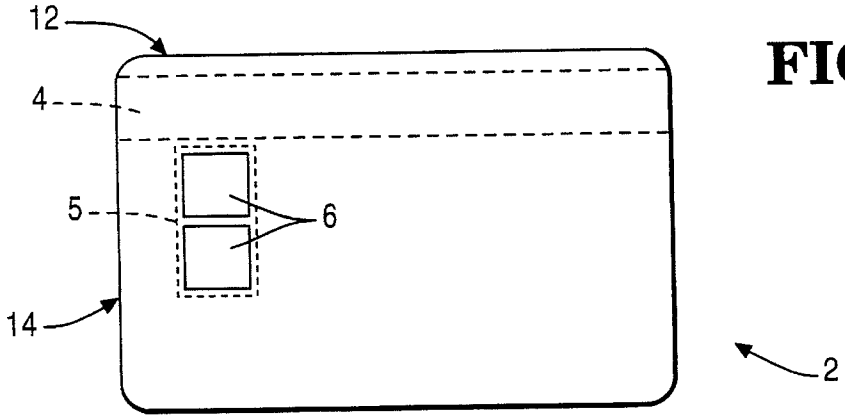

FIG. 1B

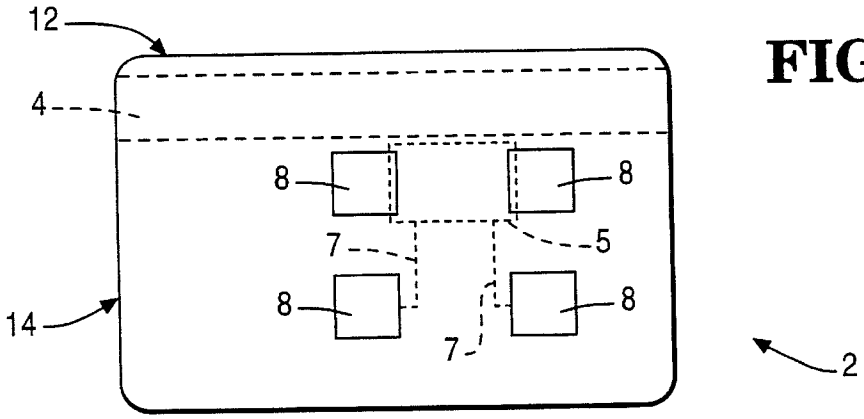

FIG. 1C

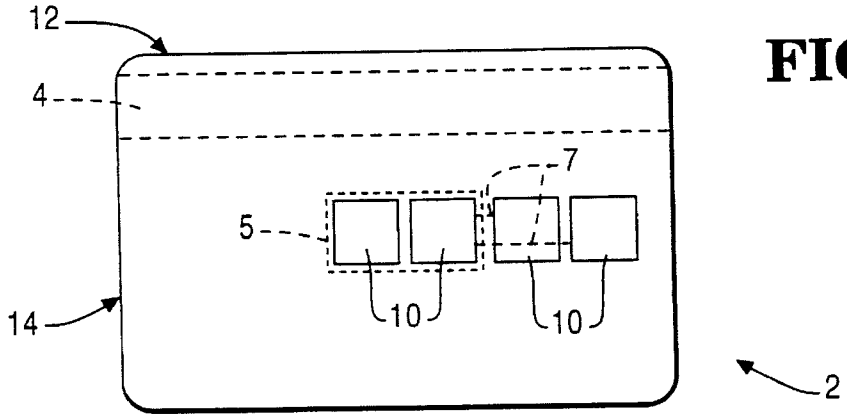

FIG. 1D

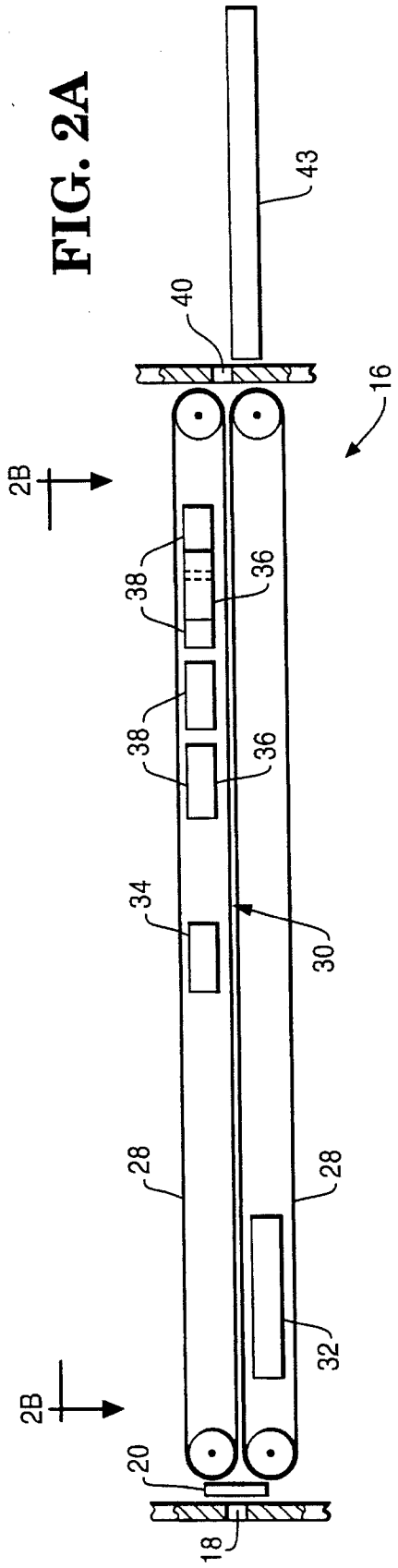
FIG. 2A
43
40
16
2B
38
36
38
36
34
30
28
28
32
2B
20
18

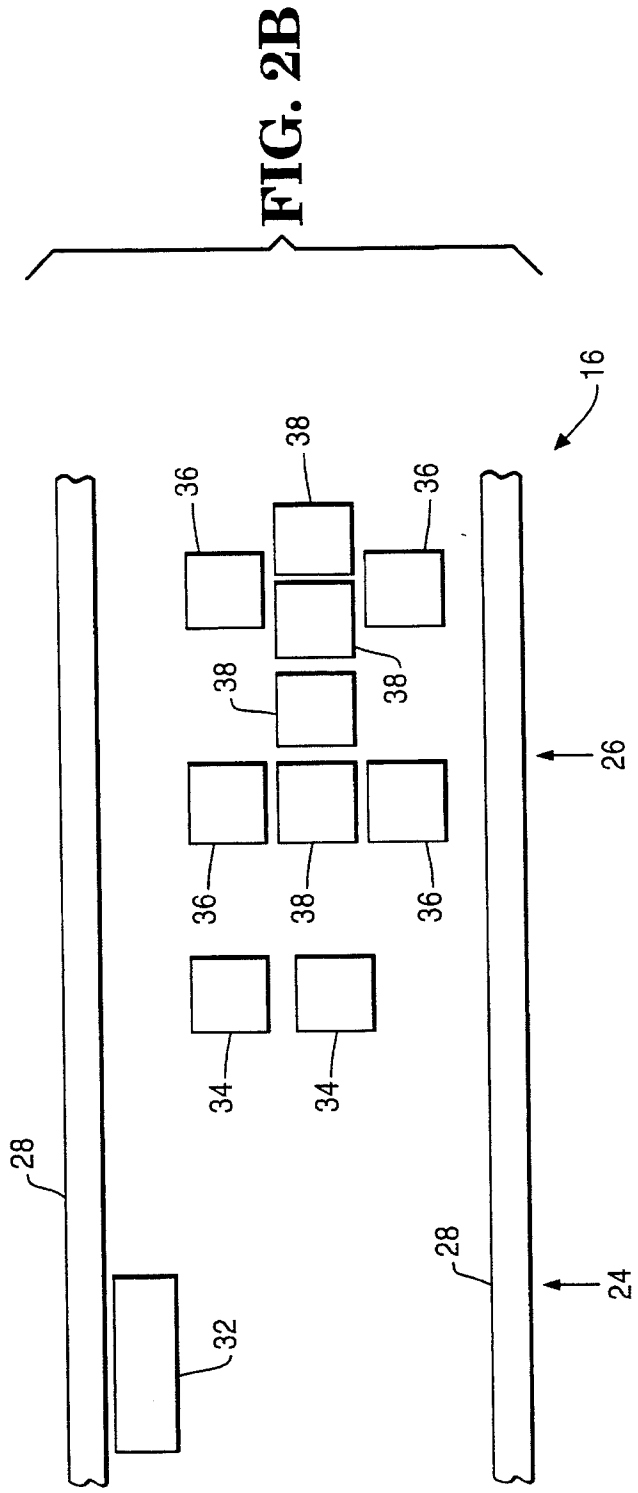
FIG. 2B
16
38
36
36
38
38
36
38
36
34
34
26
28
28
32
24

FIG. 3

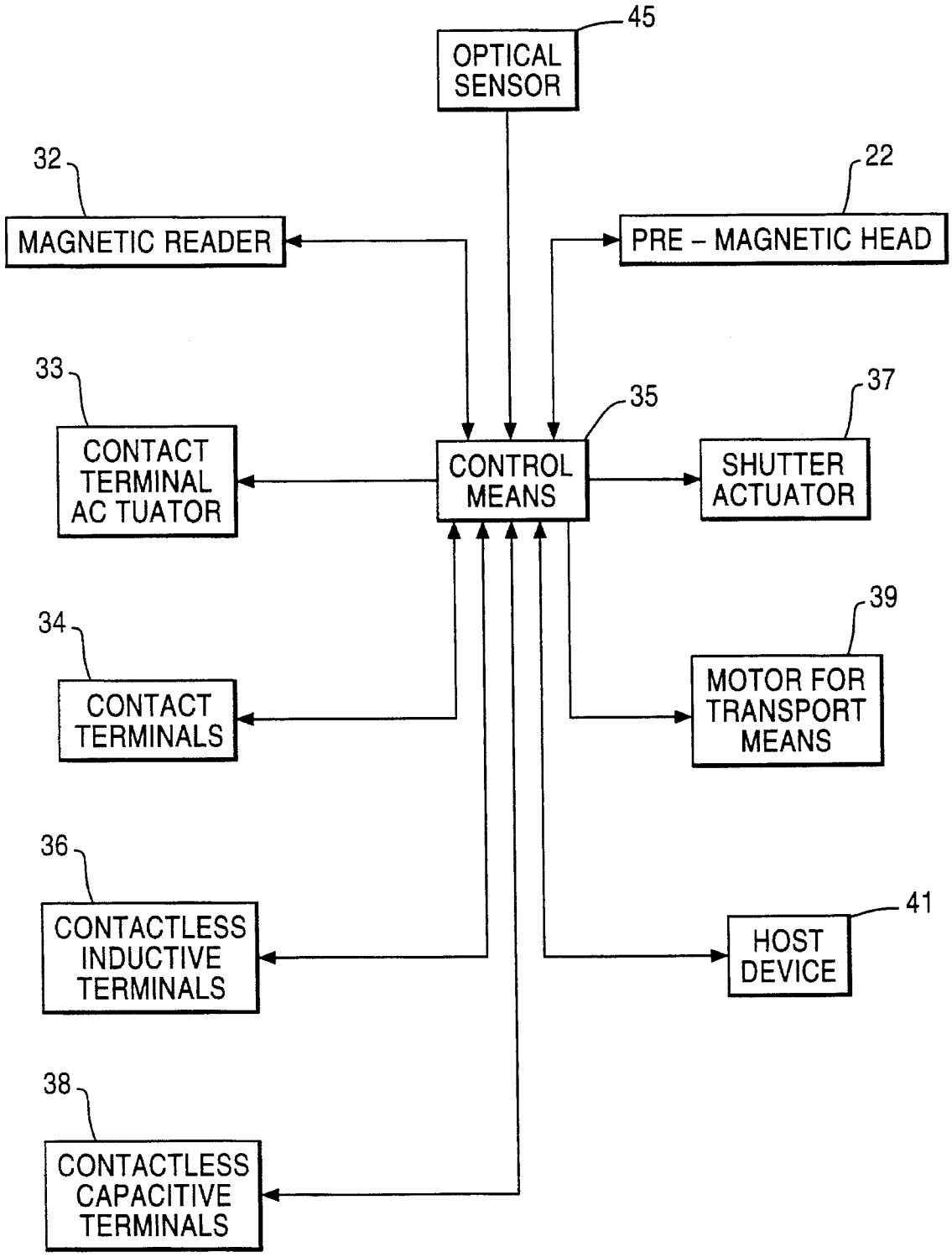
45
OPTICAL SENSOR
32
MAGNETIC READER
22
PRE – MAGNETIC HEAD
33
CONTACT TERMINAL AC TUATOR
35
CONTROL MEANS
37
SHUTTER ACTUATOR
34
CONTACT TERMINALS
39
MOTOR FOR TRANSPORT MEANS
36
CONTACTLESS INDUCTIVE TERMINALS
41
HOST DEVICE
38
CONTACTLESS CAPACITIVE TERMINALS

MULTIPLE STANDARD SMART CARD READER

This invention relates to card readers and to card reader writers and a method of operation thereof. The invention has application, for example, to a card reader for use in a transaction terminal such as an automated teller machine (ATM).

BACKGROUND OF THE INVENTION

There are two main types of cards available at present, magnetic stripe cards and IC cards in which is embedded an integrated circuit chip which can be configured to provide a variety of functions. IC cards are commonly referred to as smart cards and this is the term which will be used herewith in the specification and claims.

These cards can be used, in association with an appropriate read/writer, in a vast array of different environments. For example, user identification cards are used in association with a personal identification number (PIN) to provide access to an ATM. Also financial service cards such as credit or debit cards are used to contain information on a user's bank or building society accounts so that transactions can be attributed to those accounts merely by reading the card.

Most cards are substantially rectangular being approximately 85 mm long by 54 mm wide. Magnetic stripe cards incorporate a magnetic stripe which runs the length of the card adjacent one side. Data is stored in the magnetic stripe by causing variations in the magnetism of the material which forms the stripe, normally a powdered metal oxide such as iron oxide or chromium oxide.

The magnetic stripe is read by moving it past a reading head which detects the magnetism of the stripe and converts the magnetic signal stored therein into an electric data signal. However, magnetic stripe cards are of limited use as only a small amount of data can be stored on them. For example, a bank customer's account details and some additional information, such as an encrypted PIN number, can be stored on a magnetic stripe card, but if additional information is required to be stored then a smart card with an embedded microprocessor will be required.

Smart cards are of similar dimensions to magnetic stripe cards. However, because they contain an integrated circuit chip they can store considerably more data than a magnetic stripe card, and can be adapted to provide a number of functions in addition to merely storing data.

Smart cards are sub-divided into two groups: a) contact smart cards, in use of which retractable metallic terminals within a reader/writer are moved to physically engage a terminal or contact area on the card, in order to transmit data to and receive data from the card; and 2) contactless smart cards, in use of which data is transmitted to and received from the smart card without physically contacting the card. Contactless smart cards are read by capacitive or inductive terminals. Each of the contact or contactless smart card terminals incorporate up to eight terminal points including a power terminal point, a reset terminal point, a data transmission terminal point and a data receipt terminal point. A voltage is applied to the power terminal point by a reader/writer so as to activate the integrated circuit chip within the smart card. The reset terminal point is utilised by a reader/writer in determining which type of card is present in the read/writer and which communication protocol is utilised by the card, as will be described further in connection with a specific embodiment of the present invention. The transmission terminal point and receipt terminal point respectively are used by the card to transmit data to and receive data from the reader/writer, when in use.

The contactless smart card capacitive terminals on the card and the corresponding contactless smart card capacitive terminals in the reader/writer each perform as a plate of a capacitor. Therefore, once the chip in the smart card has been activated it may transmit data to the card reader/writer by virtue of the capacitive coupling between the smart card and the reader/writer. The inductive terminals of the card and reader/writer operate in an analogous fashion in which each terminal operates as a coupled induction coil so that data may be transmitted by virtue of the inductive coupling between the smart card and the reader/writer.

There are a variety of different magnetic stripe, contact smart card and contactless smart card formats. The most important of these formats are the ISO standard formats which are ISO 7810-13 for magnetic stripe cards, ISO 7816 for contact smart cards and ISO 10536 for contactless smart cards. These standards determine the locations of magnetic stripes and terminals on the cards and the communication protocols utilised by each type of card.

In view of the various cards available for obtaining access to transaction terminals or other facilities, many known card readers have been severely restricted in respect of the types of cards that can be read by the readers. In order to enhance the versatility of access control equipment, manufacturers have provided separate card readers with separate entry slots for magnetic stripe and smart cards. Such an arrangement has the disadvantage that a relatively large amount of space is required for the card readers. There are also card readers available that read magnetic stripe cards and contact smart cards and utilize a single entry slot. However, these readers are also relatively large and support only a single smart card type and do not support the range of available smart card types which comply with the smart card ISO standards.

OBJECTS OF THE INVENTION

It is an object of the present invention to provide a card reader of compact construction and having a high versatility as regards the different types of cards that can be read by the reader.

SUMMARY OF THE INVENTION

According to a first aspect of the present invention there is provided a card reader having an entry slot for cards, and electronic control means for controlling the operation of said reader, characterized by a smart card reading section incorporating a plurality of smart card reading means respectively adapted to read contact smart cards, capacitive contactless smart cards and inductive contactless smart cards; and transport means for moving a card inserted through said entry slot through said reader and for positioning said card in said smart card reading section, said control means being arranged to activate said plurality of smart card reading means in sequence while said card is positioned in said smart card reading section, said control means being arranged to determine which type of ISO standard card has been inserted into said reader and to implement the appropriate communications protocol to read data from said card, whereby data can be read from said card if said card is a contact smart card, a capacitive contactless smart card or an inductive contactless smart card conforming to predetermined ISO standards.

According to a second aspect of the invention there is provided a method of operating a card reader, characterized by the steps of: a) receiving a card; (b) conveying said card past a magnetic stripe read head so as to read any data stored on a magnetic stripe on said card; (c) bringing said card to rest adjacent a plurality of smart card reading means respectively adapted to read contact smart cards, capacitive contactless smart cards, and inductive contactless smart cards; and sequentially activating said plurality of smart card reading means while said card is at rest, a determination being made while each of said reading means is activated as to whether said card is a smart card corresponding to the activated reading means, and, if it is, a reading of data from said card taking place.

The above and other objects, features, and advantages of the present invention will become apparent from the following description and the attached drawings.

BRIEF DESCRIPTION OF THE DRAWINGS

FIGS. **1A** to **1D** show plan views of four cards each of which complies with one of the aforementioned ISO standards, FIG. **1A** showing a magnetic stripe card, FIG. **1B** showing a contact smart card, FIG. **1C** showing a contactless inductive smart card and FIG. **1D** showing a contactless capacitive smart card;

FIG. **2A** is a schematic side view of a card reader/writer in accordance with the present invention;

FIG. **2B** is a schematic plan view of the card reader/writer of FIG. **2A**, part of the reader/writer being broken away; and

FIG. **3** is a block circuit diagram of the card reader/writer.

DETAILED DESCRIPTION OF THE PREFERRED EMBODIMENT

With reference to FIG. **1A**, there is illustrated a magnetic stripe card **2** having a magnetic stripe **4** running the length of the card adjacent the reference edge **12**, in accordance with ISO 7810-13.

FIG. **1B** illustrates a contact smart card **2** having two contact terminals **6** positioned on one side of the card, in accordance with ISO 7816. The smart card also includes a microprocessor chip **5** embedded in the card beneath the terminals **6**, and a magnetic stripe **4** positioned as in the magnetic stripe card of FIG. **1A**. The magnetic stripe **4** is positioned on the opposite side of the card **2** from the smart card terminals **6** in accordance with ISO standards.

FIG. **1C** illustrates a contactless inductive smart card **2** having two pairs of contactless inductive terminals **8** positioned in accordance with ISO 10536 and an embedded microprocessor chip **5** beneath one of the pairs of terminals **8**. The terminals **8** are each connected to the chip **5** by a lead **7**. The contactless inductive smart card **2** also includes a magnetic stripe **4** positioned as in the magnetic stripe card **2** of FIG. **1A**.

FIG. **1D** illustrates a contactless capacitive smart card **2** having four contactless capacitive terminals **10** positioned in accordance with ISO 10536 and an embedded microprocessor chip **5** beneath one pair of terminals **10**. The terminals **10** are each connected to the chip **5** by a lead **7**. The contactless capacitive card **2** also includes a magnetic stripe **4** positioned as in the magnetic stripe card **2** of FIG. **1A**.

The magnetic stripe **4** in each of the smart cards need not contain any data and is only required to gain access to the card reader/writer **16**, as will be described below.

With reference to FIG. **2A** and **2B** there is illustrated a card reader/writer **16** in accordance with the present invention. The reader/writer **16** includes an input slot **18** dimensioned so as to receive a card **2**. The slot **18** is closed when not in use by a retractable shutter **20**, which is movable so as to enable the entry of a card **2** into the reader/writer **16**. Referring additionally to FIG. **3**, the position of the shutter **20** is controlled by a shutter actuator **37** operated under the control of a control means **35** the shutter **20** being moved so as to enable entry of a card **2**, when a card **2** incorporating a magnetic stripe **4** is detected by a pre-magnetic head **22** located adjacent the slot **18**. If the pre-magnetic head **22** fails to detect a magnetic stripe **4** then the shutter **20** will not be retracted and the card **2** will not be received by the reader/writer **16**.

The reader/writer **16** has two main sections, a magnetic head section **24** adjacent the input slot **18** and a smart card section **26** located on the side of the magnetic head section **24** remote from the input slot **18**. The reader/writer **16** incorporates a card feed means in the form of a pair of cooperating endless belts **28** which receive a card **2** at the slot **18** and convey the card **2** along a feed path **30** through both sections **24**,**26** of the reader/writer **16** with portions of the card **2** adjacent its long edges being gripped between the belts **28**.

The reader/writer **16** includes a magnetic stripe read head **32** located in the magnetic head section **24** of the reader/writer **16** so as to be in line with the magnetic stripe **4** on a card **2** as the card **2** is transmitted along the feed path **30** by the endless belts **28**.

The reader/writer **16** further includes a pair of contact smart card terminals **34**, two pairs of contactless smart card inductive terminals **36** and four contactless smart card capacitive terminals **38** located in the smart card section **26** of the reader/writer **16** and arranged so that the corresponding terminals **6**,**8** or **10** (FIG. **1B**, **1C** and **1D**) on a smart card **2** are positioned in cooperative relationship with the terminals **34**,**36** or **38**, when the card **2** is located at a predetermined position in the smart card section **26** of the reader/writer **16** by the endless belts **28**. As seen in FIG. **2B**, the capacitive terminals **38** are formed in a line extending parallel to the feed path **30**, with a first pair of the inductive terminals **36** being disposed on one side of the line of capacitive terminals **38**, and with the other pair of inductive terminals **36** being disposed on the opposite side of the line of capacitive terminals **38**.

The endless belts **28** extend to a second slot **40** in the reader/writer **16** at the opposite end of the feed path **30** from the input slot **18**. The second slot **40** provides access to a retention bin **43** in which cards **2** retained by the reader/writer **16** are received. Cards can be retained if they prove to have been stolen or to be faulty, or if the user fails to enter the correct PIN number after a predetermined number of attempts or if the card is not removed by the user within a predetermined time after the ATM transaction has been completed, as described below.

The aforementioned control means **35** (FIG. **3**) has stored therein the various communication protocols which are defined by the appropriate ISO standard and are utilized by magnetic stripe cards, contact smart cards and inductive and capacitive contactless smart cards. Also, this intelligent control means **35** has stored therein the necessary software to enable it to recognise different types of cards, i.e. magnetic stripe cards, contact and contactless smart cards and different formats of card within these card types, and to enable the reader/writer **16** to read data from and write data into any of the available card types and formats.

The control means **35** controls the operation of the card reader/writer **16** so that when a card **2** enters the reader/writer **16** a check is first made as to whether or not the card **2** is a contact smart card. The card **2** is transported to the smart card section **26** and the contact terminals **34** are pivoted into engagement with the contact terminals **6** on the card **2** by an actuator **33** (FIG. **3**), in the form of a solenoid, and activated. It should be understood that as the card **2** is transported to the smart card section **26** any data stored in the magnetic stripe **4** of the card **2** is read by the magnetic stripe read head **32** and stored in the control means **35**. After being stopped in the aforementioned predetermined position in the smart card section **26**, a reset signal is transmitted to the card **2** and if the card **2** is a contact smart card an appropriate response is sent by the chip **5** to the control means **35**, wherein communication with the card **2** is established. First of all the format of the card **2** is determined, e.g. whether the card **2** conforms to ISO 7816 and then the appropriate communication protocol is called up to enable the reader/writer **16** to read data from and possibly write data into the card **2**. If the card **2** proves not to be a contact smart card then the contact terminals **34** are de-activated and disconnected from the card **2**, and the contactless terminals **36** or **38** are activated. Either the inductive or capacitive terminals **36** or **38** may be activated first. In this embodiment the capacitive terminals **38** are activated prior to activating the inductive terminals **36**. Again a reset signal is transmitted to the card **2**, this time to determine if the card **2** is a capacitive contactless smart card. If it is, the format of the card **2** is determined, and the appropriate communication protocol is called up to enable the reader/writer **16** to read data from and possibly write data into the card **2**. If the control means **35** determines that the card **2** is not a capacitive contactless smart card then a reset signal is applied to the card **2** by the inductive terminals **36**, this time to determine if the card **2** is an inductive contactless smart card. If it is, again the format of the card **2** is determined and the appropriate communication protocol is called up to enable the reader/writer **16** to read data from and possibly write data into the card **2**.

If none of the smart card terminals **6**,**8** or **10** respond to the card **2** then the card **2** is determined not to be a smart card and the data read from the magnetic stripe **4** and stored in the control means **35** as the card **2** was being transported to the smart card section **26** is transmitted to the host device **41** (FIG. **3**) from the control means **35**.

Data read from a card **2** in the case of the card being a smart card **2** is also transmitted to the host device **41**. In addition, the host device **41** transmits to the control means **35** any data that is to be written into the card **2**. The host device **41** may be an ATM and, depending on the data read from a card **2** and possibly other data entered in the device **41**, the device **41** instructs the reader/writer **16** to return the card **2** to a user or retain the card **2**.

Referring again to FIG. **3**, the reader/writer **16** incorporates a pre-magnetic head **22** located adjacent the slot **18** which sends a signal to the control means **35** when a card **2** incorporating a magnetic stripe **4** is brought into the proximity of the pre-magnetic head **22**. The control means **35** then instructs the shutter actuator **37** to open the shutter **20** to receive the card **2**, and activates a motor **39** to drive the endless belts **28** (FIG. **2**) thus transporting the received card **2** through the card reader/writer **16**, as will be described below.

The operation of the card reader/writer **16** will now be described in more detail.

The process starts by inserting the leading edge of a card into the slot **18** of the reader/writer **16**. If the pre-magnetic head **22** adjacent the slot **18** in the reader/writer **16** detects a magnetic stripe **4** on the card **2** it will send a signal to the control means **35** which results in the reader/writer **16** opening the shutter **20** providing access to the interior of the reader/writer **16**. If the pre-magnetic head **22** fails to detect a magnetic stripe **4** on the card **2** then the control means **35** will not instruct the shutter actuator **37** to open, thereby preventing entry of the card **2** into the reader/writer **16**.

Assuming the card **2** has a magnetic stripe **4** and accordingly the shutter **18** has been opened by the reader/writer **16**, the next step is the receipt of the card **2** by the endless belts **28**. The endless belts **28** transport the card **2** through the magnetic head section **24** of the reader/writer **16** and past the magnetic stripe read head **32**. Data written on the magnetic stripe **4** will at this time be read by the magnetic stripe read head **32** and stored in the electronic control means **35** for future use if the card **2** proves not to be a smart card.

Once the card **2** is received by the endless belts **28** and has cleared the shutter **20** the control means **35** will cause the shutter actuator **37** to move the shutter **20** to close the slot **18**. The card **2** is then transported past the magnetic stripe read head **32** and into the smart card section **26** of the reader/writer **16** where it is brought to rest.

If the card **2** is a smart card, then when it is brought to rest the card **2** is located such that its smart card terminals **6**,**8** or **10** are positioned beneath, and in cooperative relationship with respect to, the corresponding smart card terminals **34**,**36** or **38**. The control means **35** causes the card **2** to be positioned in the correct location in the smart card section **26** by de-energising the motor **39** at the appropriate time in response to a signal from an optical sensor **56** (FIG. **3**) in the smart card section **26**, this sensor **56** sensing the leading edge of the card **2**.

The contact smart card terminals **34** are now pivoted into engagement with the card **2** and activated. If the card **2** is a contact smart card, then a DC voltage is applied to the power terminal point of the contact terminals **6** and a reset signal is applied to the reset terminal point of the contact terminal **6**. The reader/writer **16** then attempts to detect a response from the card **2** which would signify that the card **2** is in fact a contact smart card. If a response is received then data is read from and possibly written into the card **2** in the manner previously described, data being transmitted between the control means **35** and the host device **41**.

If no response is received by the reader/writer **16** then the contact smart card terminals **34** are de-activated and disengaged from the card **2** and the contactless capacitive terminals **38** are activated so as to transmit a power signal and a reset signal to the card **2**; in this case, assuming the card **2** is a capacitive contactless card, power is transmitted to the card **2** by transmitting an AC signal to the power terminal point of the terminals **10** of the card **2**. As with the activation of the contact card terminals **34** described above if a signal is received from the card **2**, signifying that the card **2** is a capacitive contactless smart card, then data is read from and possibly written into the card **2** as previously described.

If no response is received from the card **2**, terminals **38** are de-activated and the inductive contactless terminals **36** are activated so as to transmit a power signal and a reset signal to the card **2**. Again, if the reader/writer **16** now receives a response from the card **2**, indicating that the card **2** is an inductive contactless smart card, then, as in the case of the other types of smart card, data is read from and possibly written into the card **2**.

If the card **2** still fails to respond to the reader/writer **16**, then the terminals **36** will be de-activated and a check will

be made by the reader/writer **16** as to whether any data was read from the magnetic stripe **4** of the card **2** and stored in the control means **35** while the card **2** was being transported to the smart card section **26**, indicating that the card **2** is a magnetic stripe card. If the reader/writer **16** does determine that the card **2** is a magnetic stripe card then, as in the case of a smart card, the data read from the card **2** is transmitted to the host device **41**, and possibly data may be written into the card **2** as may be decided by the host device **41**. If at this stage the reader/writer **16** fails to find that any data has been read from the magnetic stripe **4** then this means that the reader/writer **16** has failed to recognise the card **2**, which will normally mean that the card **2** does not belong to one of the types of card for which identifying information is stored in the control means **35**. Accordingly, in this case the control means **35** will cause the motor **39** to be energised in the reverse sense so as to return the card **2** to the user.

In general, after the reader/writer **16** has recognised the card **2** as being a particular type of smart card or as being a magnetic stripe card, and a transfer of data between the card **2** and the host device **41** has taken place, the host device **41** will instruct the reader/writer **16** either to return the card **2** to the user or to retain the card **2**.

If the command from the host device **41** is to return the card **2** to the user then as mentioned above, the control means **35** energises the motor **39** in the reverse sense, so as to drive the card **2** by means of the belts **28** towards the slot **18** which at this stage will be open. The control means **35** stops the motor **39** with the card **2** projecting partially out of the reader/writer **16** through the slot **18** so that the card **2** can be collected by the user. If the card **2** is taken by the user within a predetermined period of time, the slot **18** is closed by the shutter **20** and the reader/writer **16** is now ready for a further operation. If the user fails to remove the card **2** within said predetermined period of time, then the motor **39** is energised in the forward sense so as to cause the belts **28** to feed the card **2** back into the reader/writer **16** and then through the slot **40** (FIG. 2A) and into the retention bin **43**. Once the endless belts **28** cause the card **2** to clear the shutter **20** the shutter **20** is moved to close the slot **18**. Thereafter the motor **39** is once again stopped, the slot **18** is closed by the shutter **20**, and the reader/writer **16** is again ready for the next operation.

Alternatively, if after data has been read from the card **2** the command from the host device **41** is to retain the card **2**, then the card is immediately driven by the belts **28** through the slot **40** and into retention bin **43**, at which time the motor **39** (FIG. **3**) is stopped.

The reader/writer **16** in accordance with the present invention enables any of the ISO standard cards referred to above, including magnetic stripe cards, contact smart cards and contactless smart cards to be utilised by a host device **41** through a single reader/writer **16**. The positioning of the magnetic stripe read head **32** between the input slot **18** and the smart card section **26** so that the magnetic stripe **4** on the card **2** is read as it is forwarded to the smart card section **26** enables the overall size of the reader/writer **16** to be reduced resulting in a compact reader/writer **16**. This is because reading of the trailing portion of the magnetic stripe **4** takes place after a leading portion of the card **2** has entered the smart card section **26**, thereby enabling the length of the magnetic head section **24** to be less than the length of the card **2**. In addition, the positioning of the capacitive terminals **38** between the two pairs of inductive terminals **36** also assists in achieving a compact form of construction for the reader/writer **16**.

The aforementioned embodiment is described by way of example only and features of the reader/writer **16** may be replaced by equivalents or alternatives where appropriate. For example, the pre-magnetic head **22** may be replaced by a card size detector which determines if the dimensions of a card **2** whose leading edge is inserted through the slot **18** conforms to one or more of the ISO standards referred to above. If the card **2** does comply with one of these standards the control means **35** will be activated to open the shutter **20** as with a card **2** containing a magnetic stripe **4**. If the card **2** does not comply with one of these standards the control means **35** will not instruct the shutter actuator **37** to retract the shutter **20** and the slot **18** will remain closed. If a card size detector is used the smart cards with no magnetic stripe **4** can be supported.

Although the presently preferred embodiment of the invention has been described, it will be understood that various changes may be made within the scope of the appended claims.

What is claimed is:

1. A card reader (**16**) comprising:

an entry slot (**18**) for cards (**2**);

a smart card reading section (**26**) including a plurality of smart card reading means (**34,38,36**) for reading multiple types of ISO standard smart cards, said multiple types of ISO standard smart cards including contact smart cards, capacitive contactless smart cards and inductive contactless smart cards;

transport means (**28**) for moving a card (**2**) inserted through said entry slot (**18**) along a path through said reader (**16**) and for positioning said card (**2**) in said smart card reading section (**26**); and

electronic control means (**35**) for:

activating said plurality of smart card reading means (**34,38,36**) in sequence while said card (**2**) is positioned in said smart card reading section (**26**),

determining which type of ISO standard smart card has been inserted into said reader if said card is an ISO standard smart card (**16**), and

implementing an appropriate communications protocol to read data from said card (**2**) if it is determined that said card (**2**) is an ISO standard smart card.

2. The card reader according to claim **1**, further comprising:

a magnetic stripe read head (**32**) located along said path through said reader (**16**); and

wherein said transport means (**28**) moves a card (**2**) inserted through said entry slot (**18**) past said magnetic stripe read head (**32**), enabling data to be read from said card (**2**) if said card (**2**) is a magnetic stripe card.

3. The card reader (**16**) according to claim **2**, wherein:

said magnetic stripe read head (**32**) is located between said entry slot (**18**) and said smart card section (**26**).

4. The card reader (**16**) according to claim **1**, further comprising:

a shutter (**20**) positioned adjacent the entry slot, said shutter being movable between a first position preventing access by said card, and a second permitting access by said card (**2**) to the interior of said card reader (**16**);

said shutter being under the control of said electronic control means (**35**), and by a magnetic read head (**22**) which is positioned adjacent the entry slot (**18**), said magnetic read head generating a signal which is transmitted to said control means (**35**) upon detection of a magnetic stripe (**4**) carried by said card (**2**), said control means causing said shutter to retract (**20**) in response to said signal.

5. The card reader (**16**) according to claim **2**, further comprising:

a shutter (**20**) positioned adjacent the entry slot, said shutter being movable between a first position preventing access by said card, and a second permitting access by said card (**2**) to the interior of said card reader (**16**);

said shutter being under the control of said electronic control means (**35**), and by a magnetic read head (**22**) which is positioned adjacent the entry slot (**18**), said magnetic read head generating a signal which is transmitted to said control means (**35**) upon detection of a magnetic stripe (**4**) carried by said card (**2**), said control means causing said shutter to retract (**20**) in response to said signal.

6. The card reader (**16**) according to claim **1**, further comprising:

means located along said path through said reader (**16**) for writing data to said card (**2**).

7. The card reader (**16**) according to claim **2**, further comprising:

means located along said path through said reader (**16**) for writing data to said card (**2**).

8. The card reader (**16**) according to claim **1**, wherein:

said smart card reading means for reading capacitive contactless smart cards comprises a line of terminals (**38**) located between two pairs of terminals (**36**) which are incorporated in said smart card reading means for reading inductive contactless smart cards.

9. The card reader (**16**) according to claim **2**, wherein:

said smart card reading means for reading capacitive contactless smart cards comprises a line of terminals (**38**) located between two pairs of terminals (**36**) which are incorporated in said smart card reading means for reading inductive contactless smart cards.

10. A method of operating a card reader (**16**), comprising the steps of:

receiving a card (**2**) within said card reader (**16**);

conveying said card (**2**) past a magnetic stripe read head (**32**) so as to read any data stored on a magnetic stripe (**4**) on said card (**2**);

bringing said card (**12**) to rest adjacent a plurality of smart card reading means (**34,38,36**) for reading multiple types of ISO standard smart cards, said multiple types of ISO standard smart cards including contact smart cards, capacitive contactless smart cards and inductive contactless smart cards;

sequentially activating said plurality of smart card reading means (**34,38,36**) in sequence while said card (**2**) is positioned in said smart card reading section (**26**),

determining which type of ISO standard smart card has been inserted into said reader if said card is an ISO standard smart card (**16**), and

implementing an appropriate communications protocol to read data from said card (**2**) if it is determined that said card (**2**) is an ISO standard smart card.

11. The method according to claim **10**, further including the step of:

reading said magnetic stripe (**4**) prior to activating the smart card reading means (**34,36,38**) and holding the data read from said magnetic stripe (**4**) until said smart card reading means (**34,36,38**) have been activated to determine if said card (**2**) is a smart card.

12. The method according to claim **10**, wherein said step of sequentially activating said plurality of smart card reading means comprises the steps of first activating said smart card reading means (**34**) for reading contact smart cards; and second, activating said smart card reading means (**36,38**) for reading contactless smart cards.

13. The method according to claim **11**, wherein said step of sequentially activating said plurality of smart card reading means comprises the steps of first activating said smart card reading means (**34**) for reading contact smart cards; and second, activating said smart card reading means (**36,38**) for reading contactless smart cards.

14. The method according to claim **10**, wherein said step of sequentially activating said plurality of smart card reading means comprises the steps of first activating said smart card reading means (**34**) for reading contact smart cards; second, activating said smart card reading means (**38**) for reading capacitive contactless smart cards; and third, activating said smart card reading means (**36**) forreading inductive contactless smart cards.

15. The method according to claim **11**, wherein said step of sequentially activating said plurality of smart card reading means comprises the steps of first activating said smart card reading means (**34**) for reading contact smart cards; second, activating said smart card reading means (**38**) for reading capacitive contactless smart cards; and third, activating said smart card reading means (**36**) forreading inductive contactless smart cards.

* * * * *