US 20120197691A1

(19) United States

(12) Patent Application Publication

(10) Pub. No.: US 2012/0197691 A1

(43) Pub. Date: Aug. 2, 2012

Grigg et al.

(54) **MOBILE WALLET PAYMENT VEHICLE PREFERENCES**

(75) Inventors: **David M. Grigg**, Rock Hill, SC (US); **Marc B. Keller**, Charlotte, NC (US)

(73) Assignee: **BANK OF AMERICA CORPORATION**, Charlotte, NC (US)

(21) Appl. No.: **13/017,997**

(22) Filed: **Jan. 31, 2011**

Publication Classification

(51) **Int. Cl.**

G06Q 20/00	(2006.01)
G06Q 30/00	(2006.01)
G06Q 40/00	(2006.01)
G06K 19/073	(2006.01)
H04W 4/00	(2009.01)

(52) **U.S. Cl.** ..... **705/14.1**; 235/492; 455/414.1; 705/36 R

(57) **ABSTRACT**

In general, apparatuses, methods and computer program products for making contactless financial transactions utilizing a mobile wallet are disclosed. Particularly, a mobile wallet application is disclosed that utilizes, at least in part, user specific data to generate a payment vehicle recommendation for different transactions. The user specific data may include the active user profile, prior payment vehicle usage, user preferences for the type of transaction, user location, rewards programs associated with use of one or more payment vehicles, or the like, or combinations thereof.

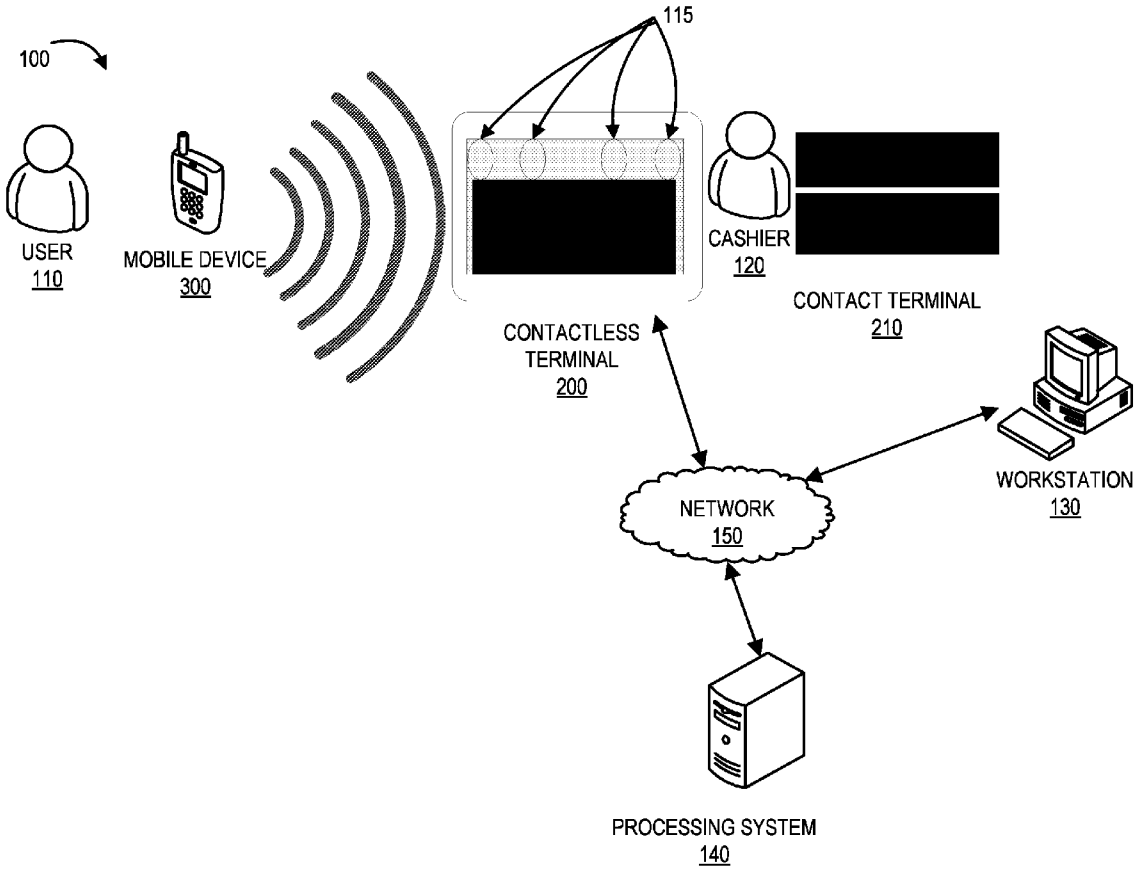

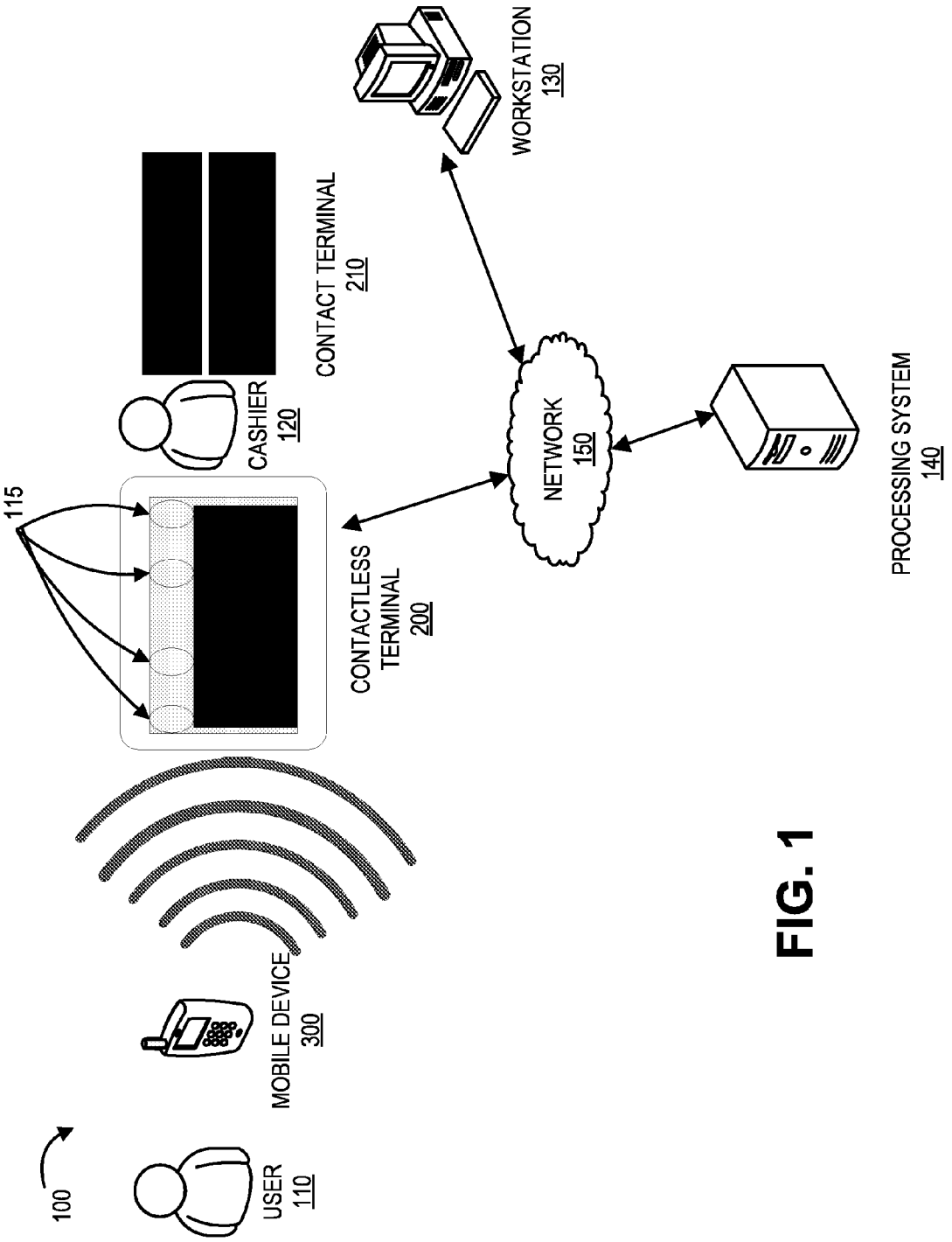
100
USER
110
MOBILE DEVICE
300
115
CONTACTLESS
TERMINAL
200
CASHIER
120
CONTACT TERMINAL
210
NETWORK
150
WORKSTATION
130
PROCESSING SYSTEM
140

FIG. 1

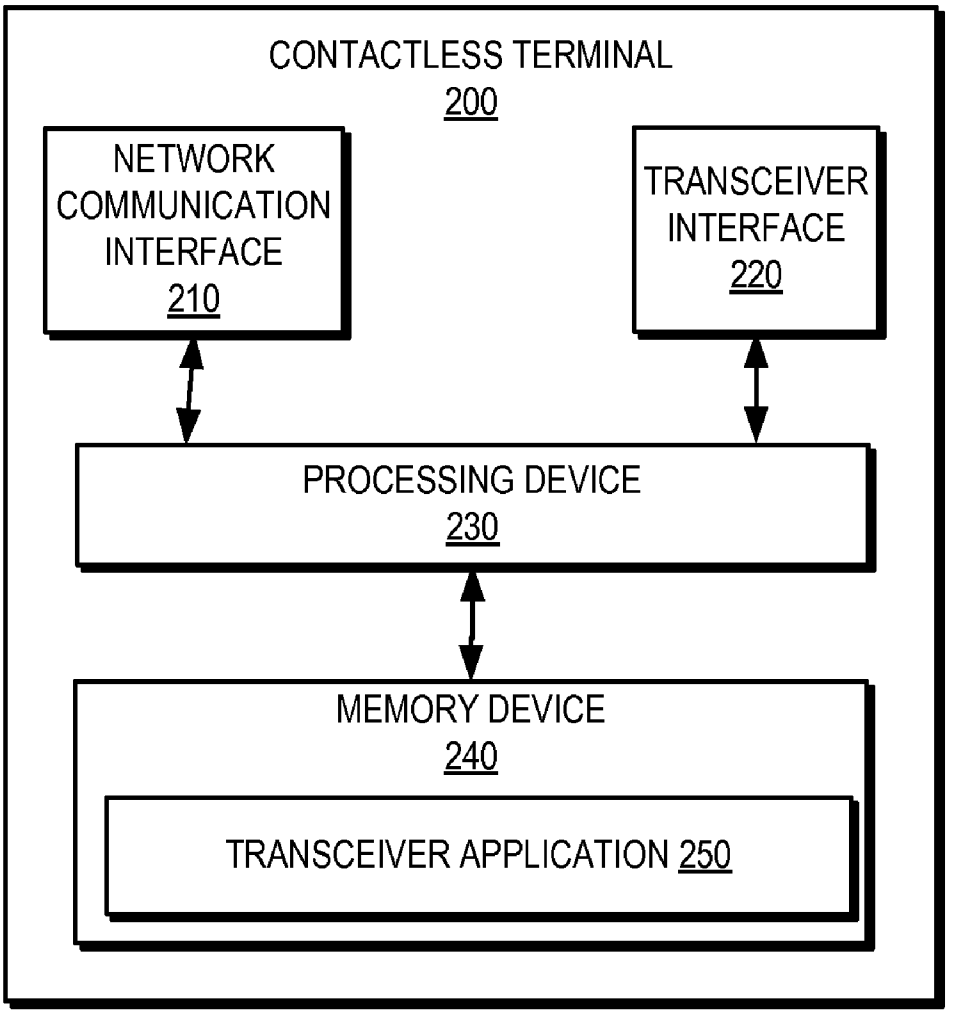
CONTACTLESS TERMINAL
200
NETWORK COMMUNICATION INTERFACE
210
TRANSCEIVER INTERFACE
220
PROCESSING DEVICE
230
MEMORY DEVICE
240
TRANSCEIVER APPLICATION 250

FIG. 2

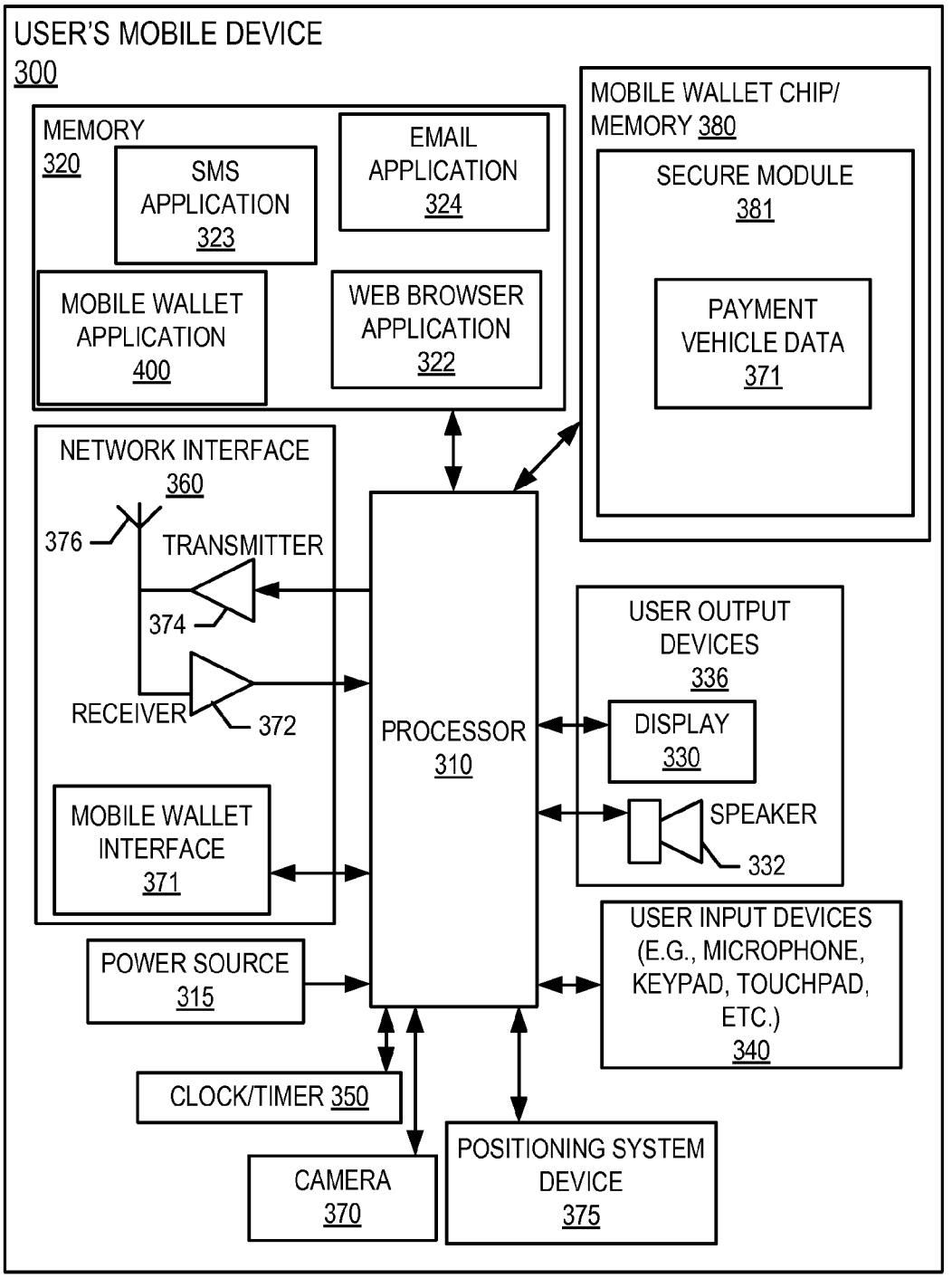
USER'S MOBILE DEVICE
300
MEMORY
320
SMS APPLICATION
323
EMAIL APPLICATION
324
MOBILE WALLET APPLICATION
400
WEB BROWSER APPLICATION
322
MOBILE WALLET CHIP/ MEMORY 380
SECURE MODULE
381
PAYMENT VEHICLE DATA
371
NETWORK INTERFACE
360
376
TRANSMITTER
374
RECEIVER
372
MOBILE WALLET INTERFACE
371
PROCESSOR
310
USER OUTPUT DEVICES
336
DISPLAY
330
SPEAKER
332
USER INPUT DEVICES (E.G., MICROPHONE, KEYPAD, TOUCHPAD, ETC.)
340
POWER SOURCE
315
CLOCK/TIMER 350
CAMERA
370
POSITIONING SYSTEM DEVICE
375

FIG. 3

400

Payment Vehicle 410	Payment Vehicle Number 420	Name Associated with Payment Vehicle 430	Expiration Date 440	Credit/ Debit 450	Payment Vehicle Recommendation 460
American Express	3711*******	John Smith	05/15	Credit	○
Visa	4141*******	John Smith	06/16	Debit	○
MasterCard	5512*******	John Smith	07/19	Credit	○
Discover	6011*******	John Smith	09/17	Credit	◉
American Express	3214*******	Jane Smith	12/17	Credit	○
Gift Card 1	8478*******	N/A	N/A	Debit	○
Gift Card 2	9520*******	N/A	N/A	Debit	○

FIG. 4

400

Payment Vehicle 410	Payment Vehicle Number 420	Name Associated with Payment Vehicle 430	Expiration Date 440	Credit/ Debit 450	Payment Vehicle Recommendation 460
American Express	3214*******	Jane Smith	12/17	Credit	◉
American Express	3711*******	John Smith	05/15	Credit	○
Discover	6011*******	John Smith	09/17	Credit	○
Visa	4141*******	John Smith	06/16	Debit	○
Mastercard	5512*******	John Smith	07/19	Credit	○
Gift Card 1	8478*******	N/A	N/A	Debit	○
Gift Card 2	9520*******	N/A	N/A	Debit	○

FIG. 5

400

Payment Vehicle 410	Payment Vehicle Number 420	Name Associated with Payment Vehicle 430	Expiration Date 440	Credit/ Debit 450	Payment Vehicle Recommendation 460
American Express	3711*********	John Smith	05/15	Credit	
Visa	4141**			Debit	
MasterCard	5512**			Credit	
Discover	6011**			Credit	
American Express	3214*******	Jane Smith	12/17	Credit	
Gift Card 1	8478********	N/A	N/A	Debit	
Gift Card 2	9520********	N/A	N/A	Debit	

600

Recommendation: MasterCard 5512*****

Transaction Type: Grocery

Reason: Rewards – 5% cash back on grocery purchases

Use this payment vehicle? YES NO

FIG. 6

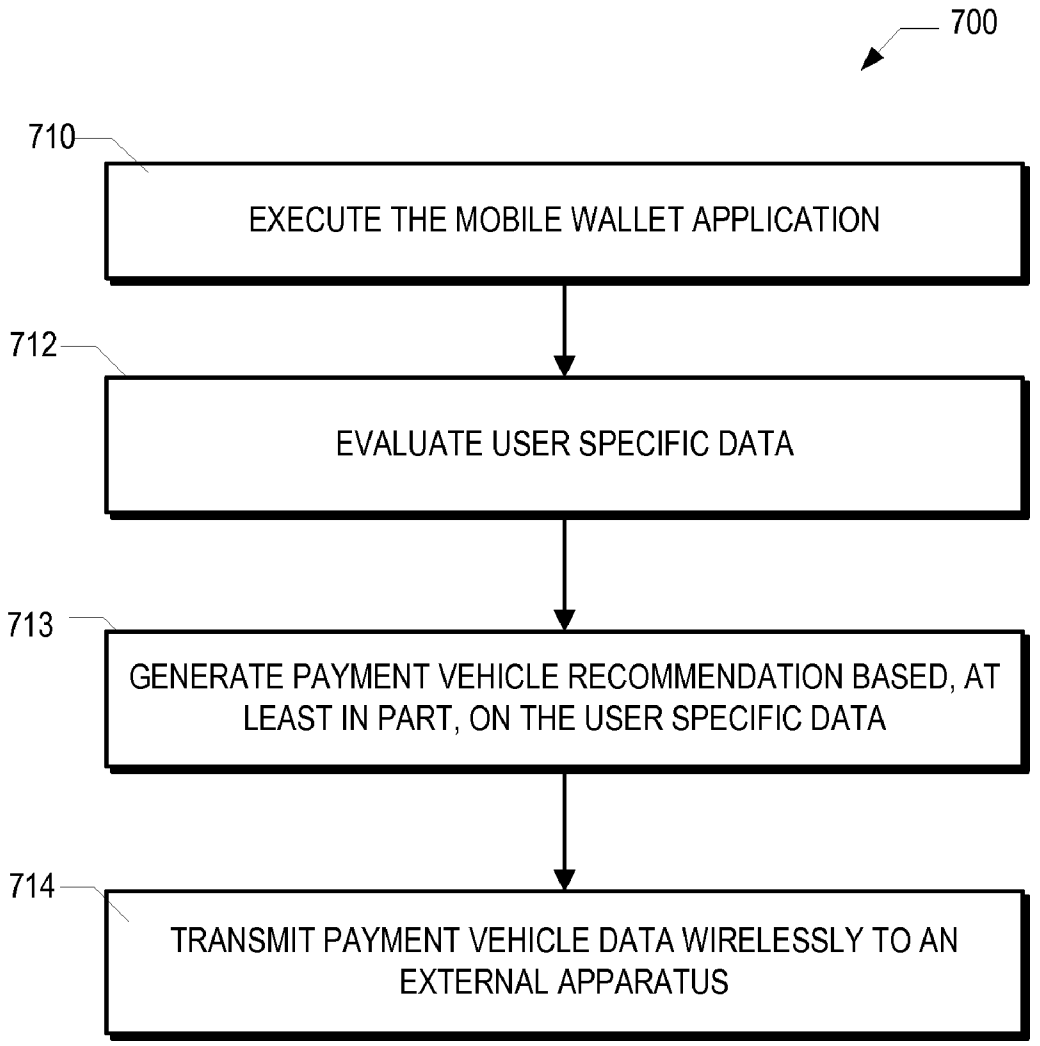
700
710
EXECUTE THE MOBILE WALLET APPLICATION
712
EVALUATE USER SPECIFIC DATA
713
GENERATE PAYMENT VEHICLE RECOMMENDATION BASED, AT LEAST IN PART, ON THE USER SPECIFIC DATA
714
TRANSMIT PAYMENT VEHICLE DATA WIRELESSLY TO AN EXTERNAL APPARATUS

FIG. 7

MOBILE WALLET PAYMENT VEHICLE PREFERENCES

BACKGROUND

[0001] In today's "digital age," more and more processes are becoming digital or automated. This is especially true in the financial industry. Over the years, primary methods for payment have evolved from cash to checks to credit and debit cards. More recently, technology has become available that permits for "contactless" transactions. For instance, a contactless payment is a payment where a customer pays a purchase amount without handing a payment card or a payment device to a cashier at the point-of-sale (POS) and without swiping the magnetic stripe of a payment card through a payment terminal (also sometimes referred to as a POS terminal). In other words, a contactless payment is one made using a payment device that may wirelessly transmit payment information to the payment terminal. Although physical contact between the payment device and the payment terminal may still occur in a contactless payment environment, physical contact between the payment device and the payment terminal is not necessary for transmission of the payment information from the payment device to the payment terminal.

[0002] Many payment terminals have the ability to read and process electronic payment information such as credit card or debit card information received wirelessly from a mobile device (e.g., a cell phone or other handheld computer) that is brought close to the payment terminal. Mobile devices configured with contactless transaction technology are often referred to as "mobile wallets" or "electronic wallets."

[0003] A mobile device having mobile wallet capabilities may allow a user to use the mobile device's interface to select a payment vehicle that the user wishes to use for paying a purchase amount. Subsequently, the mobile device may transmit payment information associated with the selected payment vehicle when the mobile device is brought close to the payment terminal. A payment vehicle may be any payment instrument such as a credit account, debit account, bank card, or other instrument that can be used by one entity to pay another entity.

[0004] Furthermore, in today's age, users have many more "accounts" than in years past. Due to various reasons, such as numerous incentive-laden reward accounts, various "store" credit accounts that offer benefits to account holders, and simply the higher rate of debt in today's society, users may have numerous payment vehicles available to them for a given transaction.

[0005] With the increasing number of accounts held by users, problems begin to arise in properly categorizing, sorting, and maintaining the payment vehicles associated with the accounts within a single mobile device. Oftentimes, users desire to use different payment vehicles for numerous types of transactions. For example, a user may desire to use one payment vehicle for automobile fuel to accurately track fuel costs through the year while the user may opt to utilize an entirely different payment vehicle for grocery expenditures because, for example, the particular payment vehicle offers increased rewards programs incentives for such purchases. Unfortunately, frequent utilization of numerous payment vehicles requires the user to repeatedly change the "default" payment vehicle. Furthermore, this practice may lead to confusion problems where the user mistakenly makes a transaction utilizing the wrong payment vehicle.

[0006] Thus, a need presently exists to produce a product capable of better managing a mobile wallet such that the desired payment vehicle is recommended or automatically set to be the default payment vehicle for different types of transactions.

SUMMARY

[0007] The following presents a simplified summary of several embodiments of the invention in order to provide a basic understanding of such embodiments. This summary is not an extensive overview of all contemplated embodiments of the invention, and is intended to neither identify key or critical elements of all embodiments, nor delineate the scope of any or all embodiments. Its purpose is to present some concepts of one or more embodiments in a simplified form as a prelude to the more detailed description that is presented later.

[0008] Embodiments of the present invention address the above needs and/or achieve other advantages by providing an apparatus (e.g., a system, computer program product, and/or other device), method, or a combination of the foregoing for making a financial transaction via a mobile device. Particularly, embodiments of the present invention are directed to providing the user with a recommendation or automatically updating the "default" payment vehicle to the desired payment vehicle for different types of transactions.

[0009] In a first embodiment of the invention, an apparatus for making a financial transaction is provided. The apparatus includes a memory device, a user interface, a communication device, and a processing device operatively coupled to the memory device and the communication device. The processing device is configured to execute computer-readable program code to display, via the user interface, a menu. The menu includes options selectable to the user that include multiple payment vehicles. The processing device is further configured to execute computer-readable program code to generate a payment vehicle recommendation. The recommendation generated is based, at least in part, on user specific data. Additionally, the processing device is further configured to execute computer-readable program code to present the generated payment vehicle recommendation to the user. Furthermore, the processing device is further configured to execute computer-readable program code to receive input instructions from the user to transmit payment vehicle data to an external apparatus. Finally, the processing device is further configured to execute computer-readable program code to transmit the payment vehicle data wirelessly to the external apparatus.

[0010] In specific embodiments, the apparatus is a mobile phone.

[0011] In some specific embodiments of the apparatus, the payment vehicle recommendation is presented to the user in the form of an automatically selected payment vehicle or an ordered list of payment vehicles arranged with the highest recommended payment vehicle presented first or at the top of the list.

[0012] In further specific embodiments of the apparatus, the payment vehicle recommendation is presented to the user in the form of a prompt to the user identifying the recommended payment vehicle and presenting information to the user relating to the reason the recommended payment vehicle was selected.

[0013] In particular specific embodiments of the apparatus, the user specific data includes the active user profile, prior payment vehicle usage, user preferences for the type of trans-

action, user location, rewards programs associated with use of one or more payment vehicles, or combinations thereof.

[0014] In some specific embodiments of the apparatus, the user specific data includes the active user profile. In some embodiments, the apparatus includes more than one user profile and the generated payment vehicle recommendation may differ depending on the user. The recommendation generated based, at least in part, on the active user's user specific data. In some embodiments, the processing device is further configured to execute computer-readable program code to generate financial planning data specific to one or more user profiles. The financial planning data includes a spending summary over a user-defined time period.

[0015] In some specific embodiments of the apparatus, the user specific data includes prior payment vehicle usage. In some embodiments, the processing device is further configured to execute computer-readable program code to record user transaction data in the memory device for some or all transactions. The user transaction data may be utilized in the generation of payment vehicle recommendations for future transactions.

[0016] In specific embodiments of the apparatus, the user specific data includes user preferences for the type of transaction. In some embodiments, the processing device is further configured to execute computer-readable program code to receive preference input from the user. The preference input includes preferred payment vehicles for a plurality of types of transactions. In some embodiments, the types of transactions include grocery transactions, convenience/fuel transactions, restaurant transactions, or combinations thereof.

[0017] In a still further specific embodiment of the apparatus, the user specific data includes the user location. In some embodiments, the user location is determined by a global positioning system (GPS). In some embodiments, the processing device is further configured to execute computer-readable program code to record user location data in the memory device for some or all transactions. The user location data may be utilized in the generation of payment vehicle recommendations for future transactions. In some other embodiments, the user location is determined by wireless communication between the apparatus and an external device where the external device communicates user location data to the apparatus.

[0018] In some specific embodiments of the apparatus, the user specific data comprises rewards programs associated with use of one or more payment vehicles.

[0019] Additionally, in some specific embodiments of the apparatus, the external apparatus is a terminal configured for contactless transactions.

[0020] In still further specific embodiments, the apparatus is configured to be capable of near field communication (NFC).

[0021] Furthermore, in specific embodiments of the apparatus, the external apparatus is a contactless payment terminal.

[0022] In another aspect of the invention, a method for making a financial transaction is provided. The method includes executing, on a mobile device that includes a memory device, a user interface, a communication device, and a processing device, a mobile wallet application. The mobile wallet application includes a menu of options selectable to a user. The options include multiple payment vehicles. The method further includes generating a payment vehicle recommendation. The recommendation generated is based, at least in part, on user specific data. Finally, the method includes transmitting payment vehicle data wirelessly to an external apparatus.

[0023] In some specific embodiments of the method, the mobile device is a mobile phone.

[0024] Additionally, in specific embodiments of the method, the payment vehicle recommendation is presented to the user, via the user interface, in the form of an automatically selected payment vehicle or an ordered list of payment vehicles arranged with the highest recommended payment vehicle presented first or at the top of the list.

[0025] In specific embodiments of the method, the payment vehicle recommendation is presented to the user, via the user interface, in the form of a prompt to the user identifying the recommended payment vehicle and presenting information to the user relating to the reason the recommended payment vehicle was selected.

[0026] In some particular specific embodiments of the method, the user specific data includes the active user profile, prior payment vehicle usage, user preferences for the type of transaction, user location, rewards programs associated with use of one or more payment vehicles, or combinations thereof.

[0027] In specific embodiments of the method, the user specific data comprises the active user profile. In some embodiments, the mobile device comprises more than one user profile and the generated payment vehicle recommendation may differ depending on the user. The recommendation generated is based, at least in part, on the active user's user specific data. In some further specific embodiments, the method further includes generating financial planning data specific to one or more user profiles. The financial planning data includes a spending summary over a user-defined time period.

[0028] In still further specific embodiments of the method of the method, the user specific data includes prior payment vehicle usage. In some embodiments, the method further includes recording user transaction data in the memory device for some or all transactions. The user transaction data may be utilized in the generation of payment vehicle recommendations for future transactions.

[0029] In some specific embodiments of the method, the user specific data comprises user preferences for the type of transaction. In some embodiments, the method further includes inputting user preference information into the mobile device. The user preference information includes preferred payment vehicles for a plurality of types of transactions. In some embodiments, the types of transactions include grocery transactions, convenience/fuel transactions, restaurant transactions, or combinations thereof.

[0030] Additionally, in further specific embodiments of the method, the user specific data includes the user location. In some embodiments, the user location is determined by a global positioning system (GPS). In further embodiments, the method additionally includes recording user location data in the memory device for some or all transactions. The user location data may be utilized in the generation of payment vehicle recommendations for future transactions. In other embodiments, the user location may be determined by wireless communication between the mobile device and an external device where the external device communicates user location data to the mobile device.

[0031] In still further specific embodiments of the method, the user specific data includes rewards programs associated with use of one or more payment vehicles.

[0032] Additionally, in some specific embodiments of the method, the external apparatus is a terminal configured for contactless transactions.

[0033] In still further specific embodiments, the method is configured to be capable of near field communication (NFC).

[0034] Furthermore, in specific embodiments of the method, the external apparatus is a contactless payment terminal.

[0035] In a still further aspect of the present invention, a computer program product for making a financial transaction via a mobile device is provided. The computer program product includes a non-transitory computer-readable medium. The medium includes a first set of code for executing, on a mobile device, a mobile wallet application configured to present a menu of options selectable to a user. The options include multiple payment vehicles. The medium further includes a second set of code for generating a payment vehicle recommendation. The recommendation is generated based, at least in part, on user specific data. Additionally, the computer-readable medium includes a third set of code for presenting the generated payment vehicle recommendation to the user. Finally, the medium includes a fourth set of code for transmitting payment vehicle data wirelessly from the mobile device to an external apparatus.

[0036] In specific embodiments of the computer program product, the mobile device is a mobile phone.

[0037] In further specific embodiments of the computer program product, the third set of code is configured to present the payment vehicle recommendation to the user in the form of an automatically selected payment vehicle or an ordered list of payment vehicles arranged with the highest recommended payment vehicle presented first or at the top of the list.

[0038] Additionally, in some embodiments of the computer program product, the third set of code is configured to present the payment vehicle recommendation to the user in the form of a prompt to the user identifying the recommended payment vehicle and presenting information to the user relating to the reason the recommended payment vehicle was selected.

[0039] In some particular embodiments of the computer program product, the user specific data includes the active user profile, prior payment vehicle usage, user preferences for the type of transaction, user location, rewards programs associated with use of one or more payment vehicles, or combinations thereof.

[0040] In still further specific embodiments of the computer program product, the user specific data includes the active user profile. In some embodiments, the second set of code is configured to generate the payment vehicle recommendation for more than one user profile within the mobile device where the payment vehicle recommendation may differ depending on the user profile. The recommendation generated may be based, at least in part, on the active user's user specific data. In some further embodiments, the computer-readable medium further includes a fifth set of code for generating financial planning data specific to one or more user profiles. The financial planning data includes a spending summary over a user-defined time period.

[0041] Furthermore, in some specific embodiments of the computer program product, the user specific data includes prior payment vehicle usage. In some embodiments, the computer-readable medium further includes a sixth set of code for recording user transaction data in a memory device for some or all transactions. The user transaction data may be utilized in the generation of payment vehicle recommendations for future transactions.

[0042] Moreover, in some specific embodiments, the user specific data comprises user preferences for the type of transaction. In some embodiments, the computer-readable medium further includes a seventh set of code for receiving user preference input. The user preference input includes preferred payment vehicles for a plurality of types of transactions. In some embodiments, the types of transactions comprise grocery transactions, convenience/fuel transactions, restaurant transactions, or combinations thereof.

[0043] In specific embodiments, the user specific data comprises the user location. In some embodiments, the user location is determined by a global positioning system (GPS). In some further embodiments, the computer-readable medium further includes an eighth set of code for recording user location data in a memory device for some or all transactions. The user location data may be utilized in the generation of payment vehicle recommendations for future transactions. In other embodiments, the user location is determined by wireless communication between the mobile device and an external device. The external device communicates user location data to the mobile device.

[0044] In still further specific embodiments of the computer program product, the user specific data includes rewards programs associated with use of one or more payment vehicles.

[0045] Additionally, in some specific embodiments of the computer program product, the external apparatus is a terminal configured for contactless transactions.

[0046] In further specific embodiments, the computer program product is configured to be capable of near field communication (NFC).

[0047] Furthermore, in specific embodiments of the computer program product, the external apparatus is a contactless payment terminal.

[0048] To the accomplishment of the foregoing and related ends, the one or more embodiments comprise the features hereinafter fully described and particularly pointed out in the claims. The following description and the annexed drawings set forth in detail certain illustrative features of the one or more embodiments. These features are indicative, however, of but a few of the various ways in which the principles of various embodiments may be employed, and this description is intended to include all such embodiments and their equivalents.

[0049] The features, functions, and advantages that have been discussed may be achieved independently in various embodiments of the present invention or may be combined with yet other embodiments, further details of which can be seen with reference to the following description and drawings.

BRIEF DESCRIPTION OF THE DRAWINGS

[0050] The present invention is further described in the detailed description which follows in reference to the noted plurality of drawings by way of non-limiting examples of embodiments of the present invention in which like reference numerals represent similar parts throughout the several views of the drawings and wherein:

[0051] FIG. **1** illustrates a block diagram illustrating a contactless payment environment, in accordance with an embodiment of the invention;

[0052] FIG. **2** illustrates a block diagram illustrating the payment terminal of FIG. **1**, in accordance with an embodiment of the invention;

[0053] FIG. **3** illustrates a block diagram illustrating the mobile device of FIG. **1**, in accordance with an embodiment of the invention;

[0054] FIG. **4** illustrates a mobile wallet application menu, in accordance with an embodiment of the invention;

[0055] FIG. **5** illustrates a mobile wallet application menu, in accordance with an embodiment of the invention;

[0056] FIG. **6** illustrates a mobile wallet application menu, in accordance with an embodiment of the invention; and

[0057] FIG. **7** is a high level flow diagram of a method for making a contactless financial transaction, in accordance with an embodiment of the present invention.

DETAILED DESCRIPTION OF EMBODIMENTS OF THE INVENTION

[0058] Embodiments of the present invention now may be described more fully hereinafter with reference to the accompanying drawings, in which some, but not all, embodiments of the invention are shown. Indeed, the invention may be embodied in many different forms and should not be construed as limited to the embodiments set forth herein; rather, these embodiments are provided so that this disclosure may satisfy applicable legal requirements. Like numbers refer to like elements throughout.

[0059] Where possible, any terms expressed in the singular form herein are meant to also include the plural form and vice versa, unless explicitly stated otherwise. Also, as used herein, the term "a" and/or "an" shall mean "one or more," even though the phrase "one or more" is also used herein. Furthermore, when it is said herein that something is "based on" something else, it may be based on one or more other things as well. In other words, unless expressly indicated otherwise, as used herein "based on" means "based at least in part on" or "based at least partially on."

[0060] In accordance with embodiments of the invention, the term "entity" may refer to a seller, merchant, or the like, that offers contactless payment as a method of paying for a purchase associated with the entity. In accordance with embodiments of the invention, the term "user" may refer to a customer or the like, who makes a payment at a payment terminal associated with an entity. In accordance with embodiments of the invention, the term "tapping" may refer to bringing a mobile device close to or within the proximity of a payment terminal so that information can be communicated wirelessly between the mobile device and the payment terminal using short range wireless transmission technology, such near-field communication (NFC) technology, radio-frequency (RF) technology, or the like. Tapping may include physically tapping the mobile device against an appropriate portion of the payment terminal or it may include only waving or holding the mobile device near an appropriate portion of the payment terminal without making physical contact with the payment terminal.

[0061] In accordance with embodiments of the invention, the term "payment vehicle" may refer to an electronic payment vehicle, such as an electronic credit or debit card. The payment vehicle may not be a "card" at all and may instead be account identifying information stored electronically in a mobile device, such as in a cell phone. In accordance with embodiments of the invention, the term "module" with respect to an apparatus may refer to a hardware component of the apparatus, a software component of the apparatus, or a component of the apparatus that comprises both hardware and software. In accordance with embodiments of the invention, the term "chip" may refer to an integrated circuit, a microprocessor, a system-on-a-chip, a microcontroller, or the like that may either be integrated into the mobile device or may be inserted and removed from the mobile device by a user. In accordance with embodiments of the invention, the phrase "mobile wallet" refers to the hardware and/or software in a mobile device that enables the mobile device to be used to make contactless payments at a payment terminal.

[0062] In accordance with embodiments of the invention, the term "financial institution" refers to any organization in the business of moving, investing, or lending money, dealing in financial instruments, or providing financial services. This includes commercial banks, thrifts, federal and state savings banks, savings and loan associations, credit unions, investment companies, merchants, insurance companies and the like. In accordance with embodiments of the invention, the term "application" or "mobile wallet application" refers to a mobile application or program or computer code for maintaining and organizing payment vehicles.

[0063] In general, embodiments of the present invention relate to apparatuses, methods and computer program products for making contactless financial transactions. More specifically, the present invention is directed to a mobile wallet application that utilizes, at least in part, user specific data to generate a payment vehicle recommendation for different transactions. The user specific data may include the active user profile, prior payment vehicle usage, user preferences for the type of transaction, user location, rewards programs associated with use of one or more payment vehicles, or the like, or combinations thereof.

[0064] As a general matter, oftentimes mobile wallet users have numerous payment vehicles. For various reasons, it is not always convenient to have one "default" payment vehicle. Many payment vehicles are linked to various rewards programs with incentives for using the payment vehicle for certain types of transactions. Users frequently wish to use a debit payment vehicle as opposed to a credit payment vehicle due to a lower price of goods/services purchased with cash/debit. Whatever the reason, as mentioned, it can be cumbersome and tedious to a mobile wallet user to frequently change their "default" payment vehicle to use a more desired payment vehicle for a particular transaction.

[0065] In recognition of the above, generally, the present invention provides a mobile wallet system that manages a user's various payment vehicles. The mobile wallet operates to "sense" the type of transaction forthcoming and to offer a payment vehicle recommendation/automatically update the "default" payment vehicle. The mobile wallet may utilize any number of factors in the recommendation such as the active profile of the user currently using the device, prior payment vehicle usage, received input from the user regarding preferences for different types of transactions, the user's location, rewards programs associated with use of one or more payment vehicles, etc.

[0066] The mobile wallet system of the present invention may be a "learning" system as well. The system may record user tendencies and utilize such tendencies in recommending a payment vehicle in a future transaction. The mobile wallet

system of the present invention provides a user with an efficient system for contactless payment transactions.

[0067] Referring to FIG. **1**, a block diagram illustrating a contactless transaction environment **100** configured for making a contactless transaction via a mobile device **300** is shown. As illustrated, the contactless transaction environment **100** may include a mobile device **300** operable by a user **110** who may be a customer who wants to make a contactless payment or other transaction via a mobile device **300**. The contactless transaction environment **100** may also include a contactless terminal **200** that may be automated or may be operable by a cashier **120**. The contactless terminal **200** may permit a user to make a contactless payment or transaction with a transaction device such as the mobile device **300**.

[0068] The environment **100** may also include a contact terminal **210** that may permit a user to make a payment via a contact transaction device such as a payment card that has a magnetic stripe which may be swiped through the contact terminal **210**.

[0069] The contactless transaction environment **100** may also include a workstation **130** and a processing system **140** that are in electronic communication with the contactless terminal **200** via a network **150**, which may be the Internet, an intranet or the like. The user interface **115** situated on the contactless terminal may be any sort of device, such as light emitting diodes (LEDs) for indicating that payment has been received, invalid payment vehicle, exceeded credit limit, etc.

[0070] In FIG. **1**, the network **150** may include a local area network (LAN), a wide area network (WAN), and/or a global area network (GAN). The network **150** may provide for wireline, wireless, or a combination of wireline and wireless communication between devices in the network. In some embodiments, the network **150** includes the Internet. In some embodiments, the network **150** may include a wireless telephone network.

[0071] FIG. **2** displays an embodiment of a contactless terminal **200** that is depicted in FIG. **1**. The contactless terminal **200** may include various features, such as a network communication interface **210**, a processing device **230**, a transceiver interface **220**, and a memory device **240** that may include a transceiver application **250**.

[0072] As used with respect to the contactless terminal **200**, a "communication interface" may generally include a modem, server, transceiver, and/or other device for communicating with other devices on a network. The network communication interface may be a communication interface having one or more communication devices configured to communicate with one or more other devices in the contactless transaction environment **100**, such as the mobile device **300**, the workstation **130**, the processing system **140**, other processing systems, data systems, etc.

[0073] In one embodiment, the transceiver interface **220** is a separate module that may generally include a transceiver, i.e., one or more antennas and/or other electronic circuitry, devices, and software, for receiving electronic payment vehicle data when the mobile device is held close to or tapped at the contactless terminal **200**. In some embodiments, the transceiver interface **220** is part of the network communication interface **210**. Furthermore, the transceiver interface **220** may also be used as an interface to send data to the mobile device **300** when the mobile device **300** is held close to or tapped at the contactless terminal **200**.

[0074] An output device for the transceiver interface **220** may include a display that provides instructions regarding the steps for making a contactless transaction. In some embodiments where the contactless terminal **200** requests the user's signature, the display may also serve as a touchpad input device to input the user's signature via a stylus. Other output devices may include one or more LEDs or an audio speaker, both which may indicate to the user that data has been successfully received from the mobile device **300**. A printer that can print paper receipts may also be incorporated into the contactless terminal **200**. Other embodiments of the contactless terminal **200** may carry other input and output devices, such as a mouse, keyboard, button, touchpad, touch screen, microphone, speaker, light, joystick, switch, or the like.

[0075] As used with respect to the contactless terminal **200**, a "processing device," **230** may generally refer to a device or combination of devices having circuitry used for implementing the communication and/or logic functions of a particular system. For example, a processing device **230** may include a digital signal processor device, a microprocessor device, and various analog-to-digital converters, digital-to-analog converters, and other support circuits and/or combinations of the foregoing. Control and signal processing functions of the system may be allocated between these processing devices according to their respective capabilities. The processing device may further include functionality to operate one or more software programs based on computer-executable program code thereof, which may be stored in a memory. As the phrase is used herein, a processing device may be "configured to" perform a certain function in a variety of ways, including, for example, by having one or more general-purpose circuits perform the function by executing particular computer-executable program code embodied in computer-readable medium, and/or by having one or more application-specific circuits perform the function. The processing device **230** may be configured to use the network communication interface **210** and/or the transceiver interface **220** to transmit and/or receive data and/or commands to and/or from the other devices that are visible in the contactless payment environment **100**.

[0076] As used with respect to the contactless terminal **200**, a "memory device" may generally refer to a device or combination of devices that store one or more forms of computer-readable media for storing data and/or computer-executable program code/instructions. For example, in one embodiment, the memory device may include any computer memory that provides an actual or virtual space to temporarily or permanently store data and/or commands provided to the processing device when it carries out its functions described herein. In one embodiment, the memory device stores a transceiver application **250**. The transceiver application **250** may work in conjunction with the previously described transceiver interface **220** to receive electronic payment vehicle data when the mobile device is held close to or tapped at the contactless terminal **200**. In some embodiments, the transceiver application **250** may also be configured to send data to the mobile device when the mobile device is held close to or tapped at the payment terminal, or potentially provide a power source to the mobile device in the event the primary power source is depleted.

[0077] As illustrated in FIG. **1**, a contactless terminal **200** may be connected to a workstation **130** via the network **150**. The workstation **130** may be used by the cashier **120** or other personnel to interact with the contactless terminal **200**. The workstation **130** may include various features, such as a net-

work communication interface, a processing device, a user interface, and a memory device.

[0078] As used with respect to the workstation **130**, a "communication interface" may generally include a modem, server, transceiver, and/or other device for communicating with other devices on a network. The network communication interface may be a communication interface having one or more communication devices configured to communicate with one or more other devices on the network **150**, such as the contactless terminal **200** and/or contact terminal **210**, the processing system **140**, other processing systems, data systems, etc.

[0079] As used with respect to the workstation **130**, a "processing device" may generally refer to a device or combination of devices having circuitry used for implementing the communication and/or logic functions of a particular system. For example, a processing device may include a digital signal processor device, a microprocessor device, and various analog-to-digital converters, digital-to-analog converters, and other support circuits and/or combinations of the foregoing. Control and signal processing functions of the system may be allocated between these processing devices according to their respective capabilities. The processing device may further include functionality to operate one or more software programs based on computer-executable program code thereof, which may be stored in a memory. As the phrase is used herein, a processing device may be "configured to" perform a certain function in a variety of ways, including, for example, by having one or more general-purpose circuits perform the function by executing particular computer-executable program code embodied in computer-readable medium, and/or by having one or more application-specific circuits perform the function. The processing device may be configured to use the network communication interface to transmit and/or receive data and/or commands to and/or from the other devices connected to the network **150**.

[0080] As used with respect to the workstation **130**, a "user interface" may generally include a plurality of interface devices and/or software that allow a user to input commands and data to direct the processing device to execute instructions. For example, the user interface may include a graphical user interface (GUI) or an interface to input computer-executable instructions that direct the processing device to carry out specific functions. The user interface may employ certain input and output devices to input data received from the user or the cashier **120** or output data to the user or the cashier **120**. These input and output devices may include a display, mouse, keyboard, button, touchpad, touch screen, microphone, speaker, light, joystick, switch, and/or other customer input/output device for communicating with one or more customers. As used with respect to the workstation **130**, a "memory device" may generally refer to a device or combination of devices that store one or more forms of computer-readable media for storing data and/or computer-executable program code/instructions. For example, in one embodiment, the memory device may include any computer memory that provides an actual or virtual space to temporarily or permanently store data and/or commands provided to the processing device when it carries out its functions described herein.

[0081] Turning now to FIG. **3**, illustrated is an embodiment of a mobile device **300** that may be configured to make a contactless transaction at a contactless terminal **200**. As used herein, a "mobile device" **300** may be any mobile communication device, such as a cellular telecommunications device (i.e., a cell phone or mobile phone), personal digital assistant (PDA), a mobile Internet accessing device, or other mobile device including, but not limited to portable digital assistants (PDAs), pagers, mobile televisions, gaming devices, laptop computers, cameras, video recorders, audio/video player, radio, GPS devices, any combination of the aforementioned, or the like.

[0082] The mobile device **300** may generally include a processor **310** communicably coupled to such devices as a memory **320**, user output devices **336**, user input devices **340**, a network interface **360**, a power source **315**, a clock or other timer **350**, a camera **370**, a positioning system device **375**, one or more mobile wallet chips/memory **380**, etc. The processor **310**, and other processors described herein, may generally include circuitry for implementing communication and/or logic functions of the mobile device **300**. For example, the processor **310** may include a digital signal processor device, a microprocessor device, and various analog to digital converters, digital to analog converters, and/or other support circuits. Control and signal processing functions of the mobile device **300** may be allocated between these devices according to their respective capabilities. The processor **310** thus may also include the functionality to encode and interleave messages and data prior to modulation and transmission. The processor **310** may additionally include an internal data modem. Further, the processor **310** may include functionality to operate one or more software programs, which may be stored in the memory **320**. For example, the processor **310** may be capable of operating a connectivity program, such as a web browser application **322**. The web browser application **322** may then allow the mobile device **300** to transmit and receive web content, such as, for example, location-based content and/or other web page content, according to a Wireless Application Protocol (WAP), Hypertext Transfer Protocol (HTTP), and/or the like.

[0083] The processor **310** may also be capable of operating a client application, such as a mobile wallet application **300**. In one embodiment of the invention, the mobile wallet application **400** may be downloaded from a server and stored in the memory **320** of the mobile device **300**. In another embodiment, the mobile wallet application **400** may be pre-installed and stored in a memory in the mobile wallet chip/memory **380**. In such an embodiment, the user may not need to download the mobile wallet application **400** from a server. In some embodiments, the mobile wallet application **400** may have a graphical user interface (GUI) that allows the user to perform various processes as described below. The GUI may also allow the user to set certain payment preferences or mobile wallet preferences.

[0084] The mobile wallet chip/memory **380** includes a secure module **381** that may contain the payment vehicle data **371**. The mobile wallet chip/memory **380** may be an integrated circuit, a microprocessor, a system-on-a-chip, a microcontroller, or the like. In one embodiment, the mobile wallet chip/memory **380** provides Near Field Communication (NFC) capabilities to the device **300**.

[0085] Of note, while FIG. **3** illustrates the mobile wallet chip/memory **380** as a separate and distinct element within the mobile device **300**, it will be apparent to those skilled in the art that the mobile wallet chip/memory **380** functionality may be incorporated within other elements in the mobile device **300**. For instance, the functionality of the mobile wallet chip/memory **380** may be incorporated within the mobile device memory **320**. In a particular embodiment, the func-

tionality of the mobile wallet chip/memory **380** is incorporated in an element within the mobile device **300** that provides NFC capabilities to the mobile device **300**. However, it is not necessary for the mobile wallet chip/memory **380** to provide the NFC capabilities to the mobile device **300**. The mobile device **300** may include a NFC providing element (and/or other wireless communication systems) (not shown) separate from the mobile wallet chip/memory **380**.

[0086] The secure module **381** may be a memory device within the mobile wallet chip/memory **380**. The secure module **381** may comprise payment vehicle data **371** associated with a plurality of payment vehicles. The payment vehicle data **371** may be data typical of standard card-type payment vehicles. For instance, payment vehicle data **371** for each payment vehicle that is stored in the secure module **381** may include the payment vehicle type, the payment vehicle number, the name associated with the payment vehicle, the expiration date of the payment vehicle, the security code associated with the payment vehicle, whether the payment vehicle is a credit or debit payment vehicle, gift card payment vehicle, etc. Additionally, the secure module **381** may comprise data indicating whether a payment vehicle is a default payment vehicle. In the embodiment depicted in FIG. **3**, since the secure module **381** is stored in a memory in the mobile wallet chip/memory **380** and not in a memory **320** in the mobile device **300**, the user may be able to transfer the mobile wallet chip/memory **380**, if the mobile wallet chip/memory **380** is not irreversibly integrated into the mobile device **300**, to another mobile device and the user may consequently have access to the payment vehicles in the mobile wallet chip/memory **380** on a different mobile device. Alternatively, the secure module **381** could be stored in a secured sector of memory **320** or other data storage of the mobile device **300** and be transferred to a new mobile device **300**. Furthermore, the mobile wallet application **400** and/or data within the secure modules may be additionally stored on an external apparatus or network to provide the user with the capability to readily transfer their mobile wallet system from one mobile device **300** to another or to restore their mobile wallet system to their device **300**, if needed.

[0087] The processor **310** may be configured to use the network interface **360** to communicate with one or more other devices on the network **150**. In this regard, the network interface **360** may include an antenna **376** operatively coupled to a transmitter **374** and a receiver **372** (together a "transceiver"). The processor **310** may be configured to provide signals to and receive signals from the transmitter **374** and receiver **372**, respectively. These signals may include radio frequency signals emanating from the mobile device's transmitter **374** when the mobile device is tapped at or held or waved in close proximity to the contactless terminal **200**. These signals may also include radio frequency signals received at the mobile device's receiver **372** when the mobile device is tapped at or held or waved in close proximity to the contactless terminal **200**. In one embodiment, these radio frequency signals may be transmitted and received in the radio frequency band, such as 13.56 MHz. In one embodiment, the ISO/IEC 14443 standard may define the protocol associated with the data carried by these radio frequency signals. In one embodiment, the transmitter **374** and receiver **372** at the mobile device may transmit and receive radio frequency signals, respectively, from a payment terminal within a distance of up to 25 cm.

[0088] As indicated earlier, the processor **310** may be configured to provide signals to and receive signals from the transmitter **374** and receiver **372**, respectively. The signals may also include signaling information in accordance with the air interface standard of the applicable cellular system of the wireless telephone network that may be part of the network **150**. In this regard, the mobile device **300** may be configured to operate with one or more air interface standards, communication protocols, modulation types, and access types. By way of illustration, the mobile device **300** may be configured to operate in accordance with any of a number of first, second, third, and/or fourth-generation communication protocols and/or the like. For example, the mobile device **300** may be configured to operate in accordance with second-generation (2G) wireless communication protocols IS-136 (time division multiple access (TDMA)), GSM (global system for mobile communication), and/or IS-95 (code division multiple access (CDMA)), or with third-generation (3G) wireless communication protocols, such as Universal Mobile Telecommunications System (UMTS), CDMA2000, wideband CDMA (WCDMA) and/or time division-synchronous CDMA (TD-SCDMA), with fourth-generation (4G) wireless communication protocols, and/or the like. The mobile device **300** may also be configured to operate in accordance with non-cellular communication mechanisms, such as via a wireless local area network (WLAN) or other communication/data networks.

[0089] The network interface **360** may also include a mobile wallet interface **371** in order to allow a user to execute some or all of the above-described processes with respect to the mobile wallet application **400** and the secure module **381** of the mobile wallet chip/memory **380**. The mobile wallet interface **371** may have access to the hardware, e.g., the transceiver, and software previously described with respect to the network interface **360**.

[0090] The mobile device **300** may comprise a transceiver that works in conjunction with the secure module **381** of the mobile device **300**. In one embodiment, the antenna and other hardware or software that transmit payment vehicle data from the secure module **381** of the mobile device **300** may be integrated into the secure module **381**.

[0091] As described above, the mobile device **300** may have a user interface that includes user output devices **336** and/or user input devices **340**. The user output devices **336** may include a display **330** (e.g., a liquid crystal display (LCD) or the like) and a speaker **332** or other audio device, which are operatively coupled to the processor **310**. The user input devices **340**, which may allow the mobile device **300** to receive data from a user **110**, may include any of a number of devices allowing the mobile device **300** to receive data from a user, such as a keypad, keyboard, touch-screen, touchpad, microphone, mouse, joystick, other pointer device, button, soft key, and/or other input device(s).

[0092] The mobile device **300** may further include a power source **315**. In one embodiment, a power source **315** is a device that supplies electrical energy to an electrical load. In one embodiment, a power source **315** may convert a form of energy such as solar energy, chemical energy, mechanical energy, etc. to electrical energy. In one embodiment, a power source **315** in a mobile device may be a battery, such as a lithium battery, a nickel-metal hydride battery, or the like, that is used for powering various circuits, e.g., the transceiver circuit, and other devices that are used to operate the mobile device **300**. In some embodiments, the power source **315** may

be a power adapter that can connect a power supply from a power outlet to the mobile device **300**. In some embodiments, a power adapter may be classified as a power source "in" the mobile device.

[0093] The mobile device **300** may also include a memory **320** operatively coupled to the processor **310**. As used herein, memory may include any computer readable medium (as defined herein below) configured to store data, code, or other information. The memory **320** may include volatile memory, such as volatile Random Access Memory (RAM) including a cache area for the temporary storage of data. The memory **320** may also include non-volatile memory, which can be embedded and/or may be removable. The non-volatile memory may additionally or alternatively include an electrically erasable programmable read-only memory (EEPROM), flash memory or the like.

[0094] The memory **320** may store any of a number of applications or programs which comprise computer-executable instructions/code executed by the processor **310** to implement the functions of the mobile device **300** described herein. For example, the memory **320** may include such applications as a web browser application **322** and a mobile wallet application **400**. The mobile wallet application **400** may be capable of performing one or more functions described above. These applications may also typically provide a graphical user interface (GUI) on the display **330**. For instance, as described previously, the GUI for the mobile wallet application **400** may allow the user **110** to enter input to select a payment vehicle or to transmit to a contactless terminal **200**.

[0095] The memory **320** may also store any of a number of pieces of information, and data, used by the mobile device **300** and the applications and devices that make up the mobile device **300** or are in communication with the mobile device **300** to implement the functions of the mobile device **300** and/or the other systems described herein. For example, the memory **320** may include such data as user authentication information to gain access to the mobile wallet application **400**, user authentication information for each payment vehicle that is stored by or accessible via the mobile wallet application **400**, user authentication information to access the secure module **381** of the mobile wallet chip/memory **380**, etc. In other embodiments, this authentication information may be stored in a memory of the mobile wallet chip **380**.

[0096] Referring to FIGS. **4-6**, embodiments of the mobile wallet application **400** are illustrated. Importantly, the mobile wallet application **400** of the present invention is not limited to the embodiments shown in the figures. Indeed, the manner in which the "menu" of payment vehicles **410** is presented to the user is not critical to the present invention. Furthermore, the functionality of the mobile wallet system, as discussed further below, may be incorporated into other mobile wallet applications and systems. For instance, in one embodiment, the mobile wallet system of the present invention is incorporated into a mobile wallet experience such as that described in co-pending application no. _____, which is incorporated herein by reference.

[0097] FIG. **4** illustrates a display of one embodiment of the mobile wallet application **400**. As illustrated, the display may include the payment vehicle **410**, the unique payment vehicle account number **420** associated with the payment vehicle **410**, the name associated with the payment vehicle **430**, the payment vehicle's expiration date **440**, whether the payment vehicle is credit or debit **450** and the payment vehicle recommendation **460** which may simply be an automated update of the "default" payment vehicle.

[0098] As shown in this embodiment, the payment vehicle recommendation **460** is the "Discover" payment vehicle **410** and is presented in the mobile wallet application **400** as the fourth payment vehicle **410** in the list. Thus, in this embodiment, the list of payment vehicles **410** may be arranged in any manner whether it be an alphabetical listing, a chronological listing based on when the payment vehicle **410** was added to the mobile wallet, user preference, etc., so long as the mobile wallet application **410** includes some sort of identifier for the automatically updated default payment vehicle/payment vehicle recommendation **460**.

[0099] The mobile wallet application **400** may be configured to utilize any sort of user specific data to generate the payment vehicle recommendation **460**. The user specific data may be any sort of metric that would be feasible to utilize in forming the recommendation. For example, the user specific data may include the active user profile (i.e. which user is currently utilizing the mobile device), prior payment vehicle usage, user preferences for the type of transaction, user location, or rewards programs associated with use of one or more payment vehicles. Furthermore, the application **400** may be a "learning" application in which recommendations may change as more user specific data is recorded. For example, if the application **400** recommends a payment vehicle for most fuel purchase transactions due primarily to a favorable rewards program associated with fuel purchases, but the user repeatedly opts not to use the recommended vehicle, the mobile wallet application **400** may cease to recommend the vehicle in favor of another vehicle or adjust the weight the recommendation relies upon rewards programs.

[0100] Regarding the active user profile, in some embodiments, the mobile device **300** includes the capability of incorporating multiple user profiles that tailor the mobile device experience to the user. Utilizing multiple profiles allows each user to access all of their desired user-specific information and applications such as email, web browsing preferences, background displays, sound levels, payment vehicles, etc., without being intermingled with other users' information and applications. Thus, the active user profile (i.e. the profile that is currently utilizing the mobile device **300**) may weigh heavily on the payment vehicle recommendation **460** as one user may generally prefer to utilize one payment vehicle for a certain transaction while another user would prefer to use an entirely different payment vehicle. Furthermore, in some instances, one user may not be authorized to use a payment vehicle while another is.

[0101] Prior payment vehicle usage may also weigh heavily in generation of the payment vehicle recommendation **460**. Prior payment vehicle usage may encompass any information associated with the payment vehicle's usage in one or more transactions in the past. For example, if a user visits a coffee shop every morning before work and uses a particular payment vehicle, the recommendation **460** may factor in the time of day of the transaction and recommend one payment vehicle **410** between the hours of 7 am and 8 am and recommend a different payment vehicle **410** during other hours. Furthermore, if the user uses a particular vehicle most often and other vehicles for only particular types of transactions, the recommended payment vehicle **410** may be the most commonly used payment vehicle **410** if the application **400** does not have any further user specific data that indicates that one of the other payment vehicles may be warranted.

Thus, the application **400** may record any data associated with transactions and use the past transaction data in generating a payment vehicle recommendation **460**.

[0102] User preferences may also be factored into the recommendation **460**. For instance, the user may input into the application a preferred payment vehicle **410** for different types of transactions, for transactions made during a certain time period or certain dates, a general order of preference of the payment vehicles that may be utilized in conjunction with other user specific data to make a recommendation, etc. For example, the user may indicate that he may wish to utilize one payment vehicle **410** for "grocery" types of transactions, a second payment vehicle **410** for "convenience/fuel" types of transactions, and a third vehicle for "restaurant" type transactions. Thus, the payment vehicle recommendation **460** may factor user preferences accordingly.

[0103] User location may also be utilized in generating the recommendation **460**. The mobile device may include capability to determine the general geographical area of the user's location such as, for example, the connection to a cellular phone tower, or even the near exact geographical position of the user, such as, for example, by utilizing a global positioning system (GPS). For example, a GPS may include "points of interest" data that may indicate the retail store, amusement park, fuel station, etc. that the user is presently located. Furthermore, in a "learning" aspect, the mobile wallet application **400** may record the user's geographic location and associate it with the actual place of business that the user transacts with. For instance, if the user utilizes their mobile wallet to make a transaction at "Retailer A," the mobile wallet application **400** may record the geographical location of the user (e.g., by utilizing a GPS) and the next time the user returns to the geographical location, recommend a payment vehicle **460** accordingly.

[0104] Additionally, the mobile device **300** may have the capability of determining the user's geographical location by wireless communication with an external device that communicates the location to the mobile device. The external device may be any device capable of wireless communication with the mobile device. For instance, the mobile device **300** may receive a wireless internet signal from a business's router and determine the user's location. In one embodiment, the mobile device **300** receives a wireless signal from security sensors, such as sensors generally placed at the entrance/exit of a place of business to detect sensors on merchandise. Furthermore, the external device may even be the contactless terminal **200** that produces a location indicating signal before the user actively attempts to communicate with the contactless terminal **200** to make a transaction.

[0105] The mobile wallet application **400** may factor rewards programs associated with payment vehicles into generating the recommendation **460** as well. For instance, if a payment vehicle includes some type of accumulation of "points," cash back rewards, frequent flyer benefits, or the like, the mobile wallet application **400** may factor the rewards into the recommendation **460**. Details on rewards programs associated with the payment vehicles **410** may be obtained by user input or by communication with the financial institution associated with the payment vehicle **410**.

[0106] As noted above, the payment vehicle recommendation **460** may be presented to the user in any manner. In one embodiment, as illustrated in FIG. **5**, the payment vehicle recommendation **460** is presented as a list from "highest recommended" to "lowest recommended" with the highest recommended payment vehicle **410** positioned at the top of the list. As illustrated, the recommendation in FIG. **5** is the "American Express" payment vehicle **410** associated with "Jane Smith." In this example, for instance, the active user profile on the mobile device **400** is "Jane Smith" while the "John Smith" user profile is dormant. Thus, the active user profile may have weighed heavily in the generation of the recommendation **460**. Of note, while FIG. **5** is described as a list from "highest recommended" to "lowest" recommended, it is not necessary that all payment vehicles **410** be "ranked." In one embodiment, the "highest recommended" payment vehicle **460** is placed at the top of the menu list while the remaining payment vehicles **410** are randomly placed on the list or organized according to a metric other than recommendation weight. In another embodiment, more than one, but not all, of the payment vehicles **410** are placed at the top of the menu list from highest to lowest recommended while other payment vehicles **410** are listed randomly or organized according to a different metric below the ranked payment vehicles **410**. Such an embodiment may be beneficial if some payment vehicles are not recommended at all, for instance, if the account is reached a spending limit, the user is not authorized to use the account, the merchant does not accept the payment vehicle **410**, etc.

[0107] FIG. **6** illustrates another embodiment for presenting the payment vehicle recommendation **460** to the user. As shown, in this embodiment, a prompt **600** is displayed to the user indicating the recommended payment vehicle **410**. As illustrated, the recommendation **460** may include a brief summary of the primary reason the particular payment vehicle **410** was recommended. In this instance, the primary reason for the recommendation of the "Master Card" payment vehicle **410** was due to a rewards program associated with the payment vehicle **410** that offered 5% cash back on grocery purchases. Of note, it is not necessary for all "prompt" embodiments of the invention to include a reason for the recommendation. FIG. **6** further illustrates a "Yes" or "No" selection available to the user to allow the user to input whether or not they agree with the using recommended payment vehicle **410**. Such a confirmation is not necessary to the prompt embodiment. For instance, the prompt may indicate what the recommendation **460** is and automatically select the recommendation as the default. If the user wishes to use a different payment vehicle **410**, he would need to change the payment vehicle **410** to the desired vehicle.

[0108] Referring now to FIG. **7**, illustrated is a high level flow diagram of a method **700** for making a contactless financial transaction. At block **710**, the mobile wallet application **400** is executed on the mobile device **300**. Executing the mobile wallet application **400** may require some degree of user authentication. At block **712**, the user specific data is evaluated. Again, user specific data may be any sort of metric that would be feasible to utilize in forming the recommendation. At block **713**, the mobile wallet application **400** generates a payment vehicle recommendation **460** that is based, at least in part, on user specific data. The transaction is completed at block **714** where payment vehicle data is wirelessly transmitted to an external apparatus. The external apparatus may generally be a contactless transaction terminal such as a contactless payment terminal, an automated teller machine (ATM), or the like.

[0109] The mobile wallet application **400** is configured to help the user manage payment information stored on the mobile device **300** and help the user to communicate payment

information to the payment terminal using the correct protocol or data format. The mobile wallet application **400**, when executed by the processor of the mobile device **300**, typically presents the user with a graphical user interface (GUI) that allows the user to select a payment vehicle **410** to use for a transaction from a plurality of payment vehicles stored in the mobile device **300**, or in a mobile wallet chip **380** that may be integrated into the mobile device. The GUI may also allow the user to set certain payment preferences or mobile wallet preferences.

[0110] Thus, present embodiments of the invention disclosed in detail above provide systems, methods, and computer program products for making a financial transaction via a mobile device and providing a mobile wallet application to effectively and efficiently manage a mobile wallet with a plurality of payment vehicles. As will be appreciated by one of skill in the art, the present invention may be embodied as a method (including, for example, a computer-implemented process, a business process, and/or any other process), apparatus (including, for example, a system, machine, device, computer program product, and/or the like), or a combination of the foregoing. Accordingly, embodiments of the present invention may take the form of an entirely hardware embodiment, an entirely software embodiment (including firmware, resident software, micro-code, etc.), or an embodiment combining software and hardware aspects that may generally be referred to herein as a "system." For example, various embodiments may take the form of web-implemented computer software. Furthermore, embodiments of the present invention may take the form of a computer program product on a computer-readable medium having computer-executable program code embodied in the medium.

[0111] It will be understood that any suitable computer-readable medium may be utilized. The computer-readable medium may include, but is not limited to, a non-transitory computer-readable medium, such as a tangible electronic, magnetic, optical, electromagnetic, infrared, and/or semiconductor system, device, and/or other apparatus. For example, in some embodiments, the non-transitory computer-readable medium includes a tangible medium such as a portable computer diskette, a hard disk, a random access memory (RAM), a read-only memory (ROM), an erasable programmable read-only memory (EPROM or Flash memory), a compact disc read-only memory (CD-ROM), and/or some other tangible optical and/or magnetic storage device. In other embodiments of the present invention, however, the computer-readable medium may be transitory, such as, for example, a propagation signal including computer-executable program code portions embodied therein.

[0112] One or more computer-executable program code portions for carrying out operations of the present invention may include object-oriented, scripted, and/or unscripted programming languages, such as, for example, Java, Perl, Smalltalk, C++, SAS, SQL, Python, Objective C, and/or the like. In some embodiments, the one or more computer-executable program code portions for carrying out operations of embodiments of the present invention are written in conventional procedural programming languages, such as the "C" programming languages and/or similar programming languages. The computer program code may alternatively or additionally be written in one or more multi-paradigm programming languages, such as, for example, F#.

[0113] Some embodiments of the present invention are described herein above with reference to flowchart illustrations and/or block diagrams of apparatuses and/or methods. It will be understood that each block included in the flowchart illustrations and/or block diagrams, and/or combinations of blocks included in the flowchart illustrations and/or block diagrams, may be implemented by one or more computer-executable program code portions. These one or more computer-executable program code portions may be provided to a processor of a general purpose computer, special purpose computer, and/or some other programmable data processing apparatus in order to produce a particular machine, such that the one or more computer-executable program code portions, which execute via the processor of the computer and/or other programmable data processing apparatus, create mechanisms for implementing the steps and/or functions represented by the flowchart(s) and/or block diagram block(s).

[0114] The one or more computer-executable program code portions may be stored in a transitory and/or non-transitory computer-readable medium (e.g., a memory, etc.) that can direct, instruct, and/or cause a computer and/or other programmable data processing apparatus to function in a particular manner, such that the computer-executable program code portions stored in the computer-readable medium produce an article of manufacture including instruction mechanisms which implement the steps and/or functions specified in the flowchart(s) and/or block diagram block(s).

[0115] The one or more computer-executable program code portions may also be loaded onto a computer and/or other programmable data processing apparatus to cause a series of operational steps to be performed on the computer and/or other programmable apparatus. In some embodiments, this produces a computer-implemented process such that the one or more computer-executable program code portions which execute on the computer and/or other programmable apparatus provide operational steps to implement the steps specified in the flowchart(s) and/or the functions specified in the block diagram block(s). Alternatively, computer-implemented steps may be combined with, and/or replaced with, operator- and/or human-implemented steps in order to carry out an embodiment of the present invention.

[0116] As used herein, a processor/computer, which may include one or more processors/computers, may be "configured to" perform a stated function in a variety of ways, including, for example, by having one or more general-purpose circuits perform the stated function by executing one or more computer-executable program code portions embodied in a computer-readable medium, and/or by having one or more application-specific circuits perform the stated function.

[0117] While the foregoing disclosure discusses illustrative embodiments, it should be noted that various changes and modifications could be made herein without departing from the scope of the described aspects and/or embodiments as defined by the appended claims. Furthermore, although elements of the described aspects and/or embodiments may be described or claimed in the singular, the plural is contemplated unless limitation to the singular is explicitly stated. Additionally, all or a portion of any embodiment may be utilized with all or a portion of any other embodiment, unless stated otherwise.

[0118] While certain exemplary embodiments have been described and shown in the accompanying drawings, it is to be understood that such embodiments are merely illustrative of and not restrictive on the broad invention, and that this invention not be limited to the specific constructions and arrangements shown and described, since various other

changes, combinations, omissions, modifications and substitutions, in addition to those set forth in the above paragraphs are possible. Those skilled in the art will appreciate that various adaptations and modifications of the just described embodiments can be configured without departing from the scope and spirit of the invention. Therefore, it is to be understood that, within the scope of the appended claims, the invention may be practiced other than as specifically described herein.

1. A mobile device for making a financial transaction comprising:

a memory device;

a user interface configured to present information to a user;

a communication device;

a processing device operatively coupled to the memory device and the communication device; and

a mobile wallet application configured to:

display, via the user interface, a menu, the menu comprising options selectable to the user, the options comprising multiple payment vehicles;

generate a payment vehicle recommendation, the recommendation generated based, at least in part, on user specific data;

present the generated payment vehicle recommendation to the user;

receive input instructions from the user to transmit payment vehicle data to an external apparatus; and

transmit the payment vehicle data wirelessly to the external apparatus.

2. The mobile device of claim **1**, wherein the mobile device is a mobile phone.

3. The mobile device of claim **1**, wherein the payment vehicle recommendation is presented to the user in the form of an automatically selected payment vehicle or an ordered list of payment vehicles arranged with the highest recommended payment vehicle presented first or at the top of the list.

4. The mobile device of claim **1**, wherein the payment vehicle recommendation is presented to the user in the form of a prompt to the user identifying the recommended payment vehicle and presenting information to the user relating to the reason the recommended payment vehicle was selected.

5. The mobile device of claim **1**, wherein the user specific data comprises the active user profile, prior payment vehicle usage, user preferences for the type of transaction, user location, rewards programs associated with use of one or more payment vehicles, or combinations thereof.

6. The mobile device of claim **5**, wherein the user specific data comprises the active user profile.

7. The mobile device of claim **6**, wherein the mobile device comprises more than one user profile and the generated payment vehicle recommendation may differ depending on the user, the recommendation generated based, at least in part, on the active user's user specific data.

8. The mobile device of claim **7**, wherein the mobile wallet application is further configured to generate financial planning data specific to one or more user profiles, the financial planning data comprising a spending summary over a user-defined time period.

9. The mobile device of claim **5**, wherein the user specific data comprises prior payment vehicle usage.

10. The mobile device of claim **9**, wherein the mobile wallet application is further configured to record user transaction data in the memory device for some or all transactions, the user transaction data being utilized in the generation of payment vehicle recommendations for future transactions.

11. The mobile device of claim **5**, wherein the user specific data comprises user preferences for the type of transaction.

12. The mobile device of claim **11**, wherein the mobile wallet application is further configured to receive preference input from the user, the preference input comprising preferred payment vehicles for a plurality of types of transactions.

13. The mobile device of claim **12**, wherein the types of transactions comprise grocery transactions, convenience/fuel transactions, restaurant transactions, or combinations thereof.

14. The mobile device of claim **5**, wherein the user specific data comprises the user location.

15. The mobile device of claim **14**, wherein the user location is determined by a global positioning system (GPS).

16. The mobile device of claim **15**, wherein the mobile wallet application is further configured to record user location data in the memory device for some or all transactions, the user location data being utilized in the generation of payment vehicle recommendations for future transactions.

17. The mobile device of claim **14**, wherein the user location is determined by wireless communication between the mobile device and an external device, the external device communicating user location data to the mobile device.

18. The mobile device of claim **5**, wherein the user specific data comprises rewards programs associated with use of one or more payment vehicles.

19. The mobile device of claim **1**, wherein the external apparatus is a terminal configured for contactless transactions.

20. The mobile device of claim **1**, wherein the mobile device is configured to be capable of near field communication (NFC).

21. The mobile device of claim **1**, wherein the external apparatus is a contactless payment terminal.

22. A method for making a financial transaction comprising:

executing, on a mobile device comprising a memory device, a user interface, a communication device, and a processing device, a mobile wallet application, the mobile wallet application comprising a menu of options selectable to a user, the options comprising multiple payment vehicles;

generating a payment vehicle recommendation, the recommendation generated based, at least in part, on user specific data; and

transmitting payment vehicle data wirelessly to an external apparatus.

23. The method of claim **22**, wherein the mobile device is a mobile phone.

24. The method of claim **22**, wherein the payment vehicle recommendation is presented to the user, via the user interface, in the form of an automatically selected payment vehicle or an ordered list of payment vehicles arranged with the highest recommended payment vehicle presented first or at the top of the list.

25. The method of claim **22**, wherein the payment vehicle recommendation is presented to the user, via the user interface, in the form of a prompt to the user identifying the recommended payment vehicle and presenting information to the user relating to the reason the recommended payment vehicle was selected.

26. The method of claim **22**, wherein the user specific data comprises the active user profile, prior payment vehicle usage, user preferences for the type of transaction, user location, rewards programs associated with use of one or more payment vehicles, or combinations thereof.

27. The method of claim **26**, wherein the user specific data comprises the active user profile.

28. The method of claim **27**, wherein the mobile device comprises more than one user profile and the generated payment vehicle recommendation may differ depending on the user, the recommendation generated based, at least in part, on the active user's user specific data.

29. The method of claim **28**, further comprising generating financial planning data specific to one or more user profiles, the financial planning data comprising a spending summary over a user-defined time period.

30. The method of claim **26**, wherein the user specific data comprises prior payment vehicle usage.

31. The method of claim **30**, further comprising recording user transaction data in the memory device for some or all transactions, the user transaction data being utilized in the generation of payment vehicle recommendations for future transactions.

32. The method of claim **26**, wherein the user specific data comprises user preferences for the type of transaction.

33. The method of claim **32**, further comprising inputting user preference information into the mobile device, the user preference information comprising preferred payment vehicles for a plurality of types of transactions.

34. The method of claim **33**, wherein the types of transactions comprise grocery transactions, convenience/fuel transactions, restaurant transactions, or combinations thereof.

35. The method of claim **26**, wherein the user specific data comprises the user location.

36. The method of claim **35**, wherein the user location is determined by a global positioning system (GPS).

37. The method of claim **36**, further comprising recording user location data in the memory device for some or all transactions, the user location data being utilized in the generation of payment vehicle recommendations for future transactions.

38. The method of claim **35**, wherein the user location is determined by wireless communication between the mobile device and an external device, the external device communicating user location data to the mobile device.

39. The method of claim **26**, wherein the user specific data comprises rewards programs associated with use of one or more payment vehicles.

40. The method of claim **22**, wherein the external apparatus is a terminal configured for contactless transactions.

41. The method of claim **22**, wherein the mobile device is configured to be capable of near field communication (NFC).

42. The method of claim **22**, wherein the external apparatus is a contactless payment terminal.

43. A computer program product for making a financial transaction via a mobile device, the computer program product comprising a non-transitory computer-readable medium comprising computer program code instructions for:

executing, on a mobile device, a mobile wallet application configured to present a menu of options selectable to a user, the options comprising multiple payment vehicles;

generating a payment vehicle recommendation, the recommendation being generated based, at least in part, on user specific data;

presenting the generated payment vehicle recommendation to the user; and

transmitting payment vehicle data wirelessly from the mobile device to an external apparatus.

44. The computer program product of claim **43**, wherein the mobile device is a mobile phone.

45. The computer program product of claim **43**, wherein the payment vehicle recommendation to the user is presented in the form of an automatically selected payment vehicle or an ordered list of payment vehicles arranged with the highest recommended payment vehicle presented first or at the top of the list.

46. The computer program product of claim **43**, wherein the payment vehicle recommendation to the user is presented in the form of a prompt to the user identifying the recommended payment vehicle and presenting information to the user relating to the reason the recommended payment vehicle was selected.

47. The computer program product of claim **43**, wherein the user specific data comprises the active user profile, prior payment vehicle usage, user preferences for the type of transaction, user location, rewards programs associated with use of one or more payment vehicles, or combinations thereof.

48. The computer program product of claim **47**, wherein the user specific data comprises the active user profile.

49. The computer program product of claim **48**, wherein the payment vehicle recommendation is generated for more than one user profile within the mobile device, wherein the payment vehicle recommendation may differ depending on the user, the recommendation generated based, at least in part, on the active user's user specific data.

50. The computer program product of claim **49**, wherein the computer-readable medium further comprises computer program code instructions for generating financial planning data specific to one or more user profiles, the financial planning data comprising a spending summary over a user-defined time period.

51. The computer program product of claim **47**, wherein the user specific data comprises prior payment vehicle usage.

52. The computer program product of claim **51**, wherein the computer-readable medium further comprises computer program code instructions for recording user transaction data in a memory device for some or all transactions, the user transaction data being utilized in the generation of payment vehicle recommendations for future transactions.

53. The computer program product of claim **47**, wherein the user specific data comprises user preferences for the type of transaction.

54. The computer program product of claim **53**, wherein the computer-readable medium further comprises computer program code instructions for receiving user preference input, the user preference input comprising preferred payment vehicles for a plurality of types of transactions.

55. The computer program product of claim **54**, wherein the types of transactions comprise grocery transactions, convenience/fuel transactions, restaurant transactions, or combinations thereof.

56. The computer program product of claim **47**, wherein the user specific data comprises the user location.

57. The computer program product of claim **56**, wherein the user location is determined by a global positioning system (GPS).

58. The computer program product of claim **57**, wherein the computer-readable medium further comprises computer program code instructions for recording user location data in a memory device for some or all transactions, the user loca-

tion data being utilized in the generation of payment vehicle recommendations for future transactions.

59. The computer program product of claim **56**, wherein the user location is determined by wireless communication between the mobile device and an external device, the external device communicating user location data to the mobile device.

60. The computer program product of claim **47**, wherein the user specific data comprises rewards programs associated with use of one or more payment vehicles.

61. The computer program product of claim **43**, wherein the external apparatus is a terminal configured for contactless transactions.

62. The computer program product of claim **43**, wherein the mobile device is configured to be capable of near field communication (NFC).

63. The computer program product of claim **43**, wherein the external apparatus is a contactless payment terminal.

* * * * *