US009022286B2

(12) **United States Patent**
Wyatt

(10) **Patent No.: US 9,022,286 B2**
(45) **Date of Patent: May 5, 2015**

(54) **MULTI-FUNCTIONAL CREDIT CARD TYPE PORTABLE ELECTRONIC DEVICE**

(71) Applicant: **Virtual Electric Inc.**, San Jose, CA (US)

(72) Inventor: **David Wyatt**, San Jose, CA (US)

(73) Assignee: **Virtual Electric, Inc.**, San Jose, CA (US)

(*) Notice: Subject to any disclaimer, the term of this patent is extended or adjusted under 35 U.S.C. 154(b) by 0 days.

(21) Appl. No.: **14/217,261**

(22) Filed: **Mar. 17, 2014**

(65) **Prior Publication Data**

US 2014/0263627 A1 Sep. 18, 2014

Related U.S. Application Data

(60) Provisional application No. 61/794,891, filed on Mar. 15, 2013.

(51) **Int. Cl.**

G06K 5/00	(2006.01)
G07F 19/00	(2006.01)
G06Q 20/06	(2012.01)
G06Q 20/22	(2012.01)
G06Q 20/34	(2012.01)
G06Q 20/38	(2012.01)
G07F 7/08	(2006.01)

(52) **U.S. Cl.**

CPC ***G07F 19/00*** (2013.01); ***G06Q 20/06*** (2013.01); ***G06Q 20/223*** (2013.01); ***G06Q 20/347*** (2013.01); ***G06Q 20/385*** (2013.01); ***G07F 7/0873*** (2013.01)

(58) **Field of Classification Search**

USPC 235/380, 439, 449, 492, 493

See application file for complete search history.

(56) **References Cited**

U.S. PATENT DOCUMENTS

6,631,849	B2 *	10/2003	Blossom	235/492
6,641,050	B2 *	11/2003	Kelley et al.	235/492
7,793,851	B2 *	9/2010	Mullen	235/493
7,841,539	B2 *	11/2010	Hewton	235/492
8,702,007	B2 *	4/2014	Yisraelian et al.	235/492
2006/0032908	A1 *	2/2006	Sines	235/380
2008/0223937	A1 *	9/2008	Preta et al.	235/492
2013/0048712	A1 *	2/2013	Guillaud et al.	235/379

* cited by examiner

Primary Examiner — Seung Lee

(57) **ABSTRACT**

An embodiment includes a credit card device capable of generating a programmed magnetic field of alternating polarity based on a speed of a card swipe, and methods for constructing the device for the purpose of emulating a standard credit card. An apparatus is described to allow said device to emulate behavior of a credit card when used in electronic credit card readers. Additionally methods are described to allow user control of said device for the purpose of authorizing or controlling use of said device in the application of credit, debit and cash transactions, including cryptocurrency and card-to-card transactions. Methods are also described for generating a limited-duration credit card number when performing a transaction for the purpose of creating a limited-use credit card number, which is limited in scope of use to a predetermined number of authorized transactions. Furthermore said device may interact with other similar devices in proximity for the purpose of funds or credit/debit transfers.

20 Claims, 7 Drawing Sheets

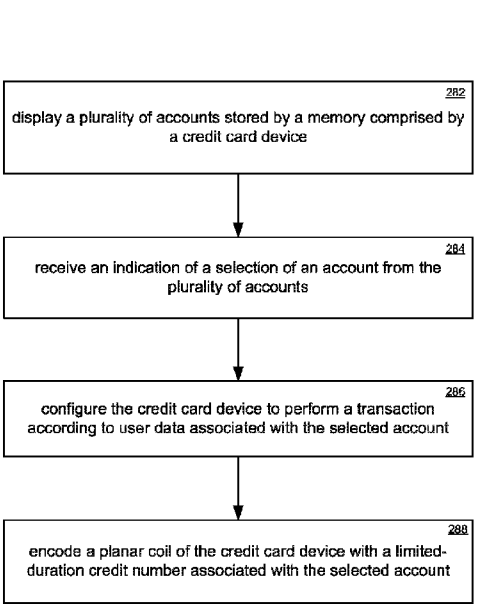

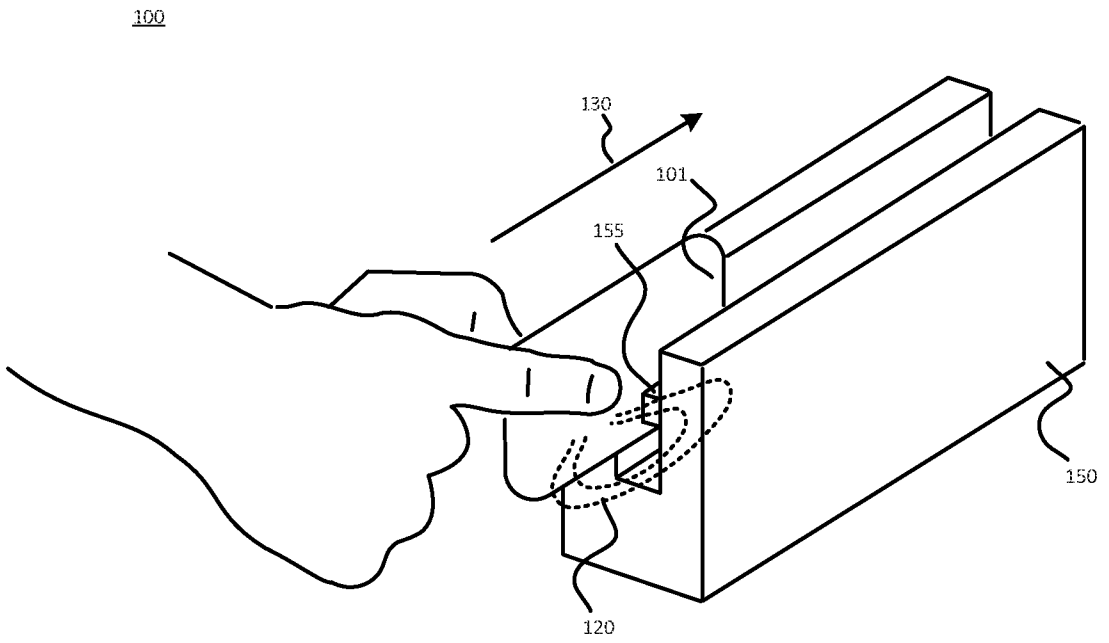

FIG. 1

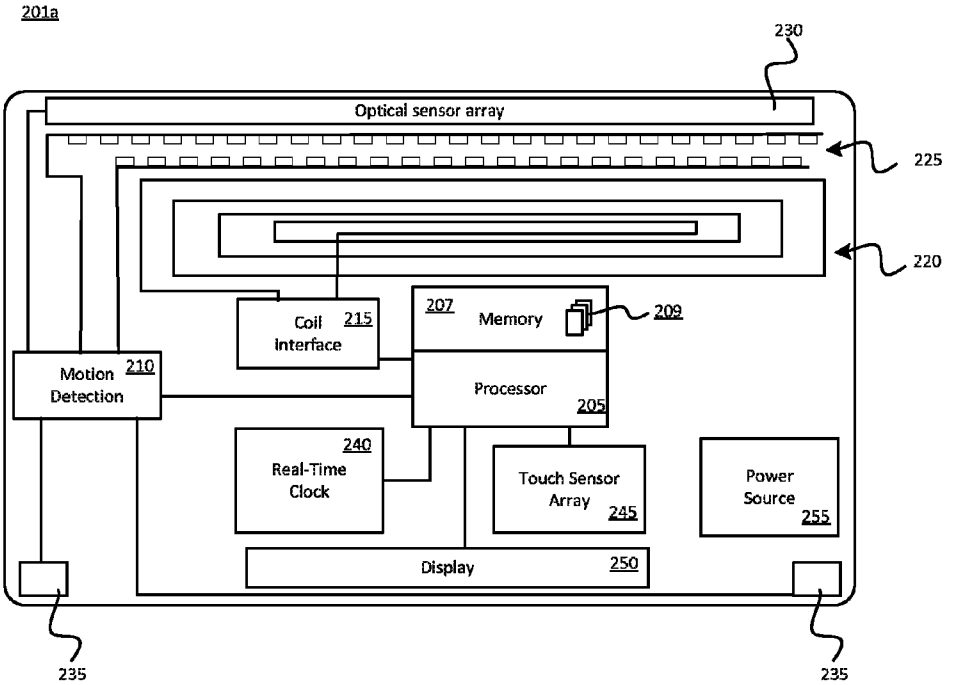
201a
230
Optical sensor array
225
220
Coil Interface 215
207
Memory
209
Motion Detection 210
Processor
205
240
Real-Time Clock
Touch Sensor Array 245
Power Source 255
Display 250
235
235

FIG. 2A

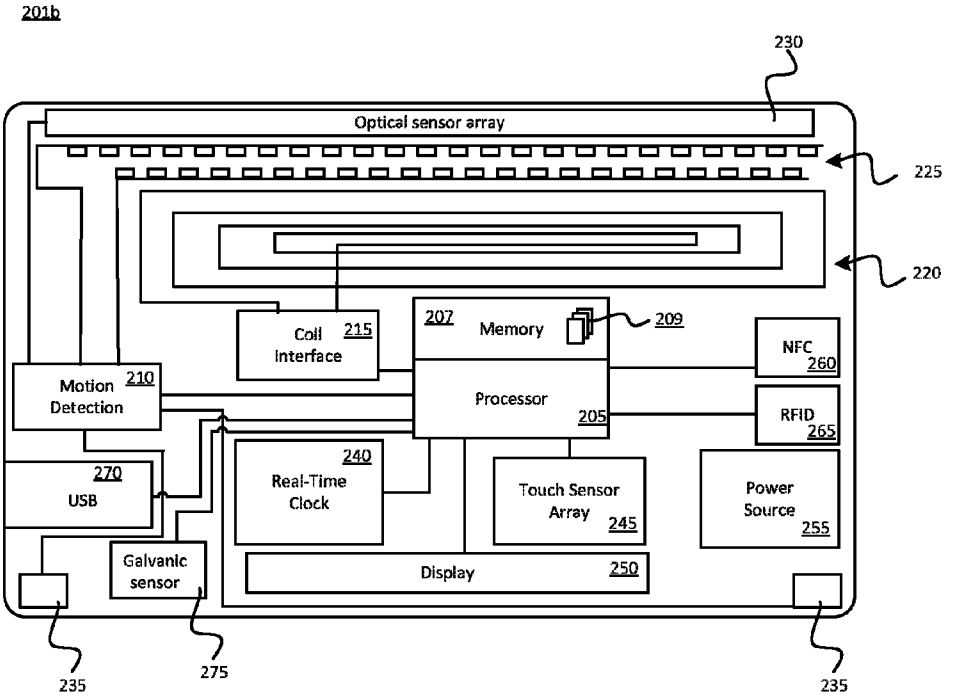
201b
230
Optical sensor array
225
220
Coil Interface 215
207
Memory
209
NFC 260
Motion Detection 210
Processor
205
RFID 265
270
USB
240
Real-Time Clock
Touch Sensor Array 245
Power Source 255
Galvanic sensor
Display 250
235
275
235

FIG. 2B

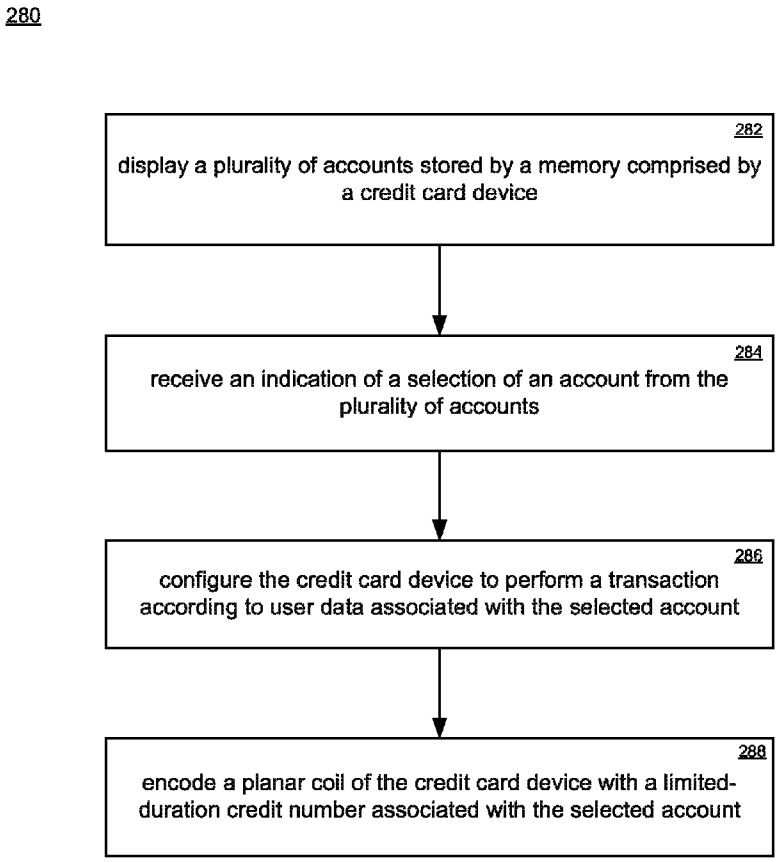
280
282
display a plurality of accounts stored by a memory comprised by a credit card device
284
receive an indication of a selection of an account from the plurality of accounts
286
configure the credit card device to perform a transaction according to user data associated with the selected account
288
encode a planar coil of the credit card device with a limited-duration credit number associated with the selected account

FIG. 2C

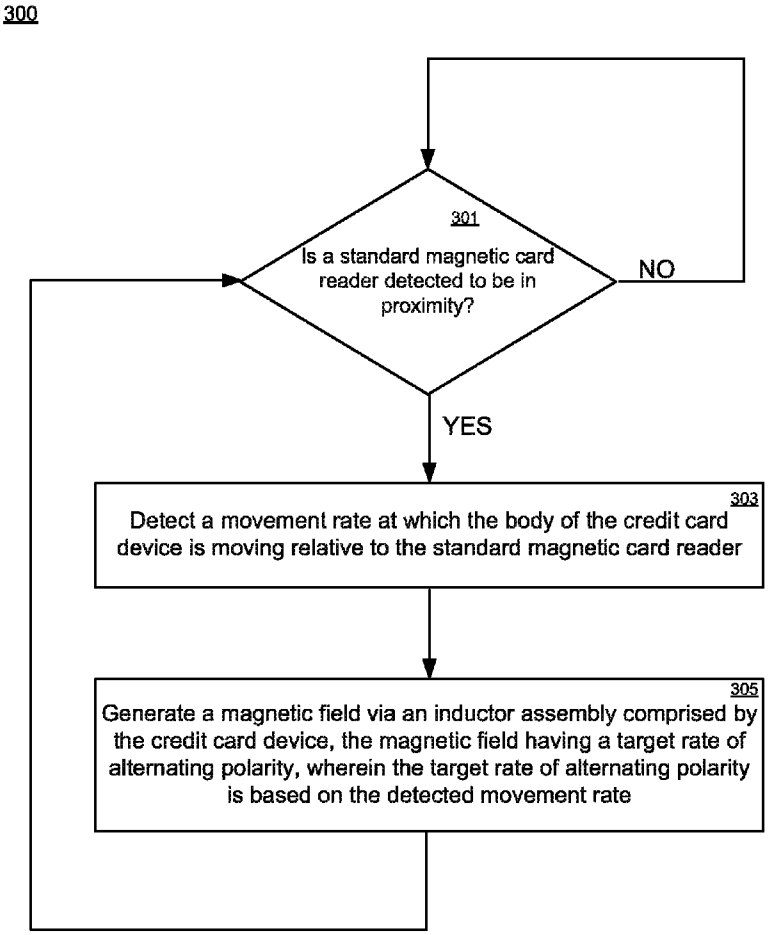
300
301
Is a standard magnetic card reader detected to be in proximity?
NO
YES
303
Detect a movement rate at which the body of the credit card device is moving relative to the standard magnetic card reader
305
Generate a magnetic field via an inductor assembly comprised by the credit card device, the magnetic field having a target rate of alternating polarity, wherein the target rate of alternating polarity is based on the detected movement rate

FIG. 3

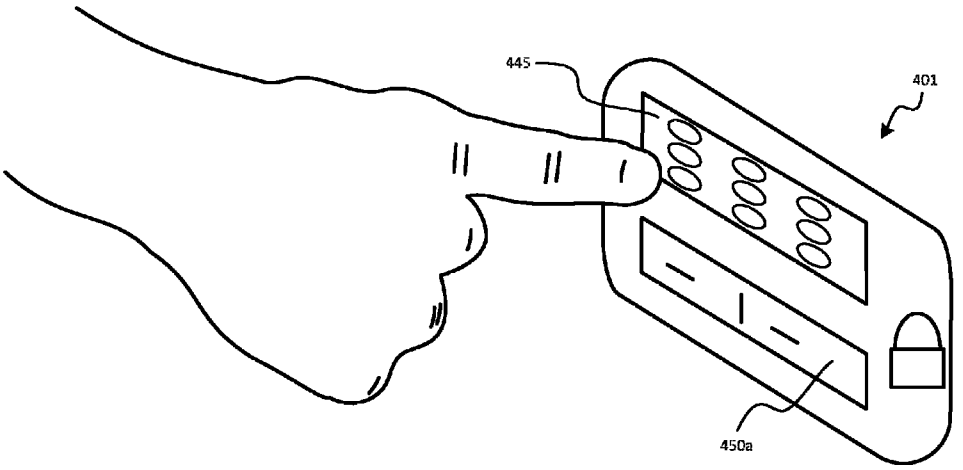

FIG. 4A

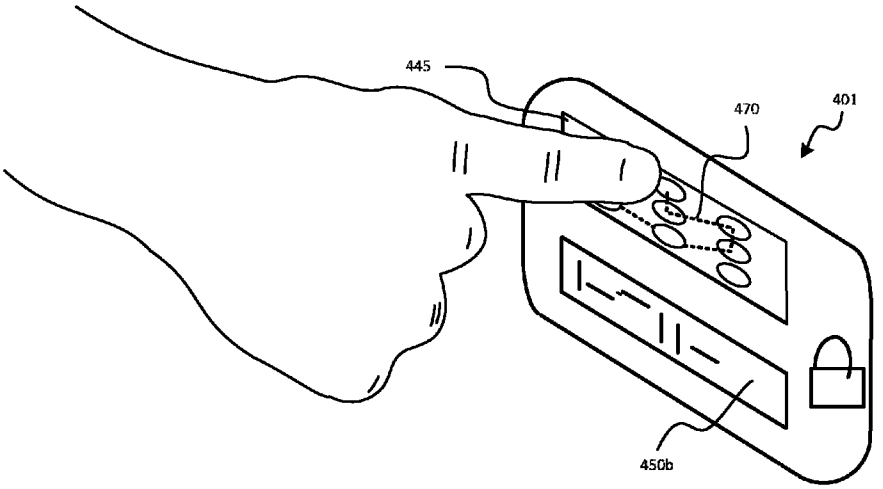

FIG. 4B

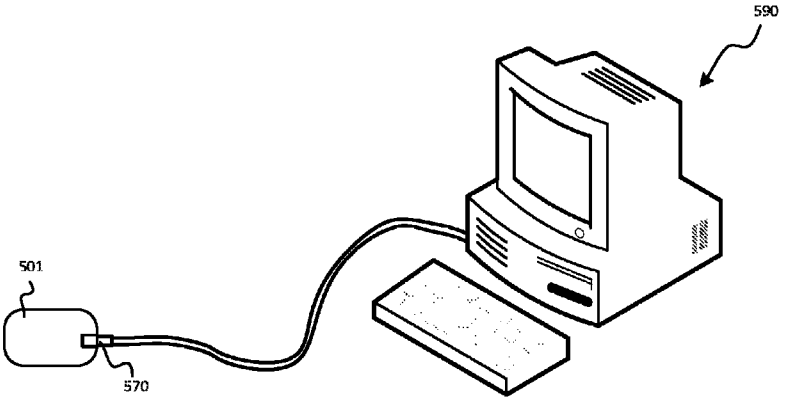

FIG. 5

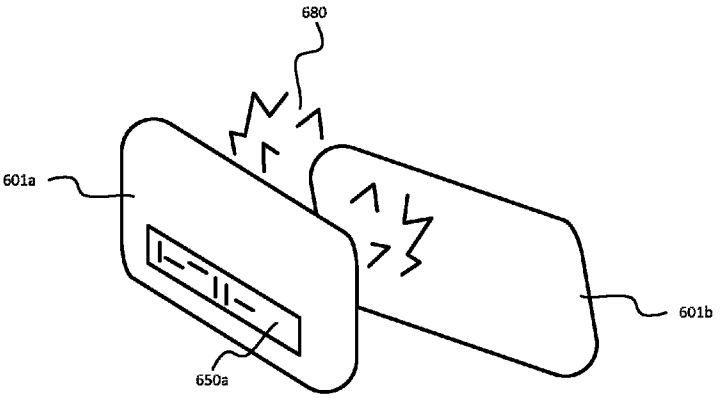

FIG. 6

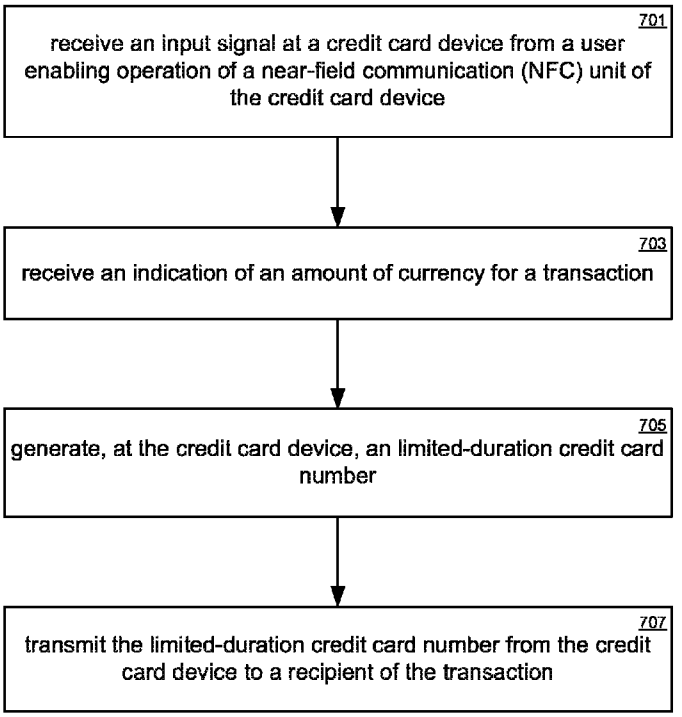
700
701
receive an input signal at a credit card device from a user enabling operation of a near-field communication (NFC) unit of the credit card device
703
receive an indication of an amount of currency for a transaction
705
generate, at the credit card device, an limited-duration credit card number
707
transmit the limited-duration credit card number from the credit card device to a recipient of the transaction

FIG. 7

MULTI-FUNCTIONAL CREDIT CARD TYPE PORTABLE ELECTRONIC DEVICE

RELATED APPLICATIONS

This application claims the benefit of U.S. Provisional Patent No. 61/794,891, entitled "Multi-Functional Credit Card Device," filed Mar. 15, 2013 to inventor David Wyatt, which is hereby incorporated in its entirety by reference.

FIELD OF THE INVENTION

Embodiments according to the present disclosure generally relate to electronic or smart credit card devices and, more specifically, to more secure, smart credit card devices.

BACKGROUND OF THE INVENTION

There are several different types of credit cards available in the marketplace at present. A first type of credit card is a conventional, standard piece of plastic with a magnetic strip, which is readily available and in wide commercial use. The advantage of this first type of credit card is that a large portion of the infrastructure for credit card transactions is built around this type of card, and consequently such a card works in a wide array of vendors' credit card machines, automated teller machines (ATMs), and other devices that support the present credit card and banking infrastructure.

Another type of credit card device employs the use of a smart integrated circuit chip. These types of credit cards have a built in microprocessor with cryptographic capabilities. These microprocessors operate in a similar manner to a cell phone having a chip comprising a cryptographic processor. Such a smart card device requires contact with a reader in order to be read and to perform a transaction. The reader provides the manner in which a facility interacts with the built-in processor on the card, e.g., for purposes of performing verification on the authenticity of the card or for making a direct deposit on the card. These credit card devices also comprise a magnetic strip such that they are compatible with standard plastic credit card readers in wide use.

A different type of credit card device in circulation employs radio frequency identification ("RFID"). These cards essentially have a low-power RF antenna built into the card, and when the cardholder passes the antenna in front of a reader comprising an RF field, enough power is generated to enable the processor to interact wirelessly with the receiving device.

A concern with each of these types of credit cards presently available in the marketplace is that they can all be, in various ways, susceptible to theft and/or compromise. Therefore, these types of credit cards have security limitations. Further, cards employing smart integrated circuit chips and RF technology are not in wide use at present because they are incompatible with existing credit card infrastructure, which still predominantly supports conventional plastic credit cards.

SUMMARY OF THE INVENTION

This Summary is provided to introduce a selection of concepts in a simplified form that are further described below in the Detailed Description. This Summary is not intended to identify key features or essential features of the claimed subject matter, nor is it intended to be used to limit the scope of the claimed subject matter.

An embodiment includes a credit card device capable of generating a programmed magnetic field of alternating polarity based on a speed of a card swipe, and methods for constructing the device for the purpose of emulating a standard credit card. An apparatus is described to allow said device to emulate behavior of a credit card when used in electronic credit card readers. Additionally methods are described to allow user control of said device for the purpose of authorizing or controlling use of said device in the application of credit, debit and cash transactions, including cryptocurrency and card-to-card transactions. Methods are also described for generating a limited-duration credit card number when performing a transaction for the purpose of creating a limited-use credit card number, which is limited in scope of use to a predetermined number of authorized transactions. Furthermore said device may interact with other similar devices in proximity for the purpose of funds or credit/debit transfers.

More specifically, an aspect of the present disclosure provides an apparatus comprising: a thin card shaped sized body; a memory operative to store a plurality of identification data; a processor coupled to the memory; a user interface for selecting a select identification data of said plurality of identification data; a magnetic card reader detection unit for determining if the body is adjacent to a standard magnetic card reader; and an inductor assembly coupled to the processor and integrated into the body, the inductor assembly under processor control for generating a magnetic field of alternating polarity responsive to the body being detected as adjacent to a standard magnetic card reader, the magnetic field generated in a region substantially encompassing the standard magnetic card reader, wherein the magnetic field encodes said select identification data, and wherein the magnetic field is operable to be read by a magnetic read head of the standard magnetic card reader.

According to another aspect of the present disclosure, a credit card device comprises: a near-field communication (NFC) unit; a touch sensor array; a display; a motion rate detection array; a memory, storing a user data and a currency amount; and a processor operatively coupled to the NFC unit, the touch sensor array, the display, the motion rate detection array, and the memory; and wherein the processor initiates a card-to-card transaction between two credit card devices by a detected proximity of a first credit card device and a second credit card device and an input of information by a first user via said touch sensor array, and wherein the card-to-card transaction comprises an exchange of stored currency and said user data between the first credit card device and the second credit card device via the NFC unit.

According to yet another aspect of the present disclosure, a method of performing a transaction comprises: receiving an input signal at a credit card device from a user enabling operation of a near-field communication (NFC) unit of the credit card device; receiving an indication of an amount of currency for a transaction; generating at said credit card device a limited-duration credit card number; and transmitting said limited-duration credit card number from said credit card device to a recipient of the transaction.

BRIEF DESCRIPTION OF THE DRAWINGS

Embodiments of the present disclosure are illustrated by way of example, and not by way of limitation, in the figures of the accompanying drawings and in which like reference numerals refer to similar elements.

FIG. **1** is an illustration depicting an exemplary interaction between a credit card device and a standard magnetic card reader, according to an embodiment of the present disclosure.

FIGS. **2**A-**2**B are block diagrams illustrating data flow between the magnetic coils on the credit card device and the

microprocessor on the credit card according to an embodiment of the present disclosure.

FIG. **2**C depicts an exemplary process of selecting an account from a plurality of stored accounts according to an embodiment of the present disclosure.

FIG. **3** is a flowchart illustrating an exemplary process of generating a magnetic field with an alternating polarity according to an embodiment of the present disclosure.

FIGS. **4**A-**4**B illustrate a user interacting with a touch sensor of the credit card device, according to an embodiment of the present disclosure.

FIG. **5** is an illustration of a credit card device connected with a computing system and operating according to an embodiment of the present disclosure.

FIG. **6** is an illustration of two credit card devices performing a transaction according to an embodiment of the present disclosure.

FIG. **7** depicts an exemplary process according to an embodiment of the present disclosure.

DETAILED DESCRIPTION OF THE INVENTION

Reference will now be made in detail to the various embodiments of the present disclosure, examples of which are illustrated in the accompanying drawings. While described in conjunction with these embodiments, it will be understood that they are not intended to limit the disclosure to these embodiments. On the contrary, the disclosure is intended to cover alternatives, modifications and equivalents, which may be included within the spirit and scope of the disclosure as defined by the appended claims. Furthermore, in the following detailed description of the present disclosure, numerous specific details are set forth in order to provide a thorough understanding of the present disclosure. However, it will be understood that the present disclosure may be practiced without these specific details. In other instances, well-known methods, procedures, components, and circuits have not been described in detail so as not to unnecessarily obscure aspects of the present disclosure.

Some portions of the detailed descriptions which follow are presented in terms of procedures, steps, logic blocks, processing, and other symbolic representations of operations on data bits that can be performed on computer memory. These descriptions and representations are the means used by those skilled in the data processing arts to most effectively convey the substance of their work to others skilled in the art. A procedure, computer generated step, logic block, process, etc., is here, and generally, conceived to be a self-consistent sequence of steps or instructions leading to a desired result. The steps are those requiring physical manipulations of physical quantities. Usually, though not necessarily, these quantities take the form of electrical or magnetic signals capable of being stored, transferred, combined, compared, and otherwise manipulated in a computer system. It has proven convenient at times, principally for reasons of common usage, to refer to these signals as bits, values, elements, symbols, characters, terms, numbers, or the like.

It should be borne in mind, however, that all of these and similar terms are to be associated with the appropriate physical quantities and are merely convenient labels applied to these quantities. Unless specifically stated otherwise as apparent from the following discussions, it is appreciated that throughout the present claimed subject matter, discussions utilizing terms such as "storing," "creating," "protecting," "receiving," "encrypting," "decrypting," "destroying," or the like, refer to the action and processes of a computer system or integrated circuit, or similar electronic computing device, including an embedded system, that manipulates and transforms data represented as physical (electronic) quantities within the computer system's registers and memories into other data similarly represented as physical quantities within the computer system memories or registers or other such information storage, transmission or display devices.

Encoding Via an Alternating Polarity of a Magnetic Field

In one embodiment of the present disclosure, a smart credit card device comprises a dynamic magnetic region (strip) incorporating a main inductor assembly from which programmed magnetic field data symbols are dynamically generated. In one embodiment the inductor assembly may be a planar coil formed within the material that embodies the credit card. An advantage of using a planar coil is that it can dynamically produce a magnetic field in such a manner as to emulate the interaction between a traditional magnetic strip and a conventional credit card reader. As the magnetic strip of a conventional credit card is passed through a magnetic reader head, stripes of alternating magnetic polarity embedded in the strip induce a magnetic field of alternating polarity at the reader head. The pattern formed by the alternating polarity of the magnetic field encodes information, which when transformed by a transducer to a current signal in the magnetic reader head, provides user information for a transaction.

Embodiments of the present disclosure provide a credit card device able to generate a programmed magnetic field, wherein data is encoded and represented by an alternating polarity of the generated magnetic field. In a similar manner to a conventional plastic credit card, the magnetic field produced by the planar coil is able to be read by a pickup (or "transducer") and to thereby transmit information to the magnetic card reader. FIG. **1** illustrates a credit card transaction **100** performed between a credit card device **101** and a conventional magnetic reader **150**. The credit card device **101** generates a magnetic field of alternating polarity **120** to be read by the conventional magnetic card reader **150**, according to an embodiment of the present disclosure. The credit card device **101** is moved at a rate **130** relative to a magnetic reader head **155** of conventional magnetic card reader **150**. The magnetic field **120** extends with sufficient distance and intensity from credit card **101** so as to be read by magnetic head reader **155**. The magnetic head reader **155** responds to the magnetic field **120** by producing a current in the conventional fashion, which is then interpreted as encoded information by the magnetic reader **150**. Therefore the magnetic field of alternating polarity **120** produced by the credit card device **101** has a substantially identical encoding effect as a traditional magnetic strip.

A characteristic of encoding information in a conventional magnetic card strip is that binary information is encoded by the pattern of alternating magnetic polarity formed by ferromagnetic stripes embedded on the magnetic strip. As the conventional magnetic card strip has a standardized format, the encoding of information is provided at a specified data density (bits per inch), according to which conventional magnetic readers are designed for interpretation of encoded data. In order to most ably emulate a conventional credit card interaction with a conventional magnetic reader the credit card device **101** of the present disclosure is provided with a means of determining a substantially optimal rate for alternating the polarity of the generated magnetic field **120** in order to produce data at a rate which is able to be readily received and correctly interpreted by the conventional magnetic reader **150**. Embodiments of the present disclosure provide several means of determining the relative movement rate **130** between the credit card device **101** and the magnetic reader head **155**. These features, as well as other characteris-

tics of the credit card device of the present disclosure, can be better appreciated by a description of the internal components and functions of credit card device **101**.

FIGS. **2**A and **2**B depict exemplary embodiments of the smart credit card device, in a block diagram view. The components of the block diagram are illustrated according to functional connections, and their locations should not be construed as being limited to the respective locations as depicted in FIGS. **2**A-**2**B. In FIG. **2**A, credit card device **201***a* is shown in a block diagram view. Credit card device **201***a* comprises a processor **205** and a memory unit **207**, the processor **205** operatively coupled to the components of credit card device **201***a*. The memory **207** comprises a plurality of accounts **209**, which may be credit card accounts, banking accounts, merchant accounts, online accounts, cryptocurrency accounts, and combinations thereof. A motion detection module **210** is coupled to the processor unit **205** and to a set of motion detection units, which comprise a rate detection assembly **225**, an optical sensor array **230**, and a set of accelerometers **235**. The magnetic field is generated via a planar coil **220**, which is controlled by the processor unit **205** via a coil interface **215**. The rate at which the magnetic field changes polarity to encode the user data depends on the rate of relative movement detected by the rate detector. The credit card device **201***a* further comprises a real-time clock **240**, a touch-sensor array **245**, and a display **250**, each operatively coupled to the processor unit **205**. A user input may be made via the touch sensor array **245**, which may comprise a touch screen panel, a keypad, or a combination thereof. The display **250** is able to display an alphanumeric sequence, as well as graphical icons (such as a logo for a bank, or other images). Further, an optional backup power source **255** is depicted.

In one embodiment, the processor unit **205** is connected to the planar coil **220** and the motion detection units, via the motion detection module **210**. The processor unit **205** is responsible for determining the appropriate rate with which to output data from the planar coil **220**, wherein output data is encoded using alternating polarity of a generated magnetic field. The rate of the alternating polarity of the magnetic field is generated in accordance with the detected movement speed with which the card is swiped through the reader, in order for the reader to receive the encoded data at the appropriate rate. Magnetic card readers, which are designed to read conventional credit cards, are constructed to read data at specified input rates that correspond with the data density present in conventional magnetic card strips. The magnetic data symbols generated by the planar coil **220** are produced to align with the rate at which data is being read by the magnetic card reader. Accordingly, it is irrelevant if the credit card device **201***a* of the present disclosure is being swiped quickly or slowly, the planar coil **220** is controlled by the processor unit **205** to produce data at a substantially optimized rate, where the rate of data production is dependent on the rate at which the credit card device **201***a* is detected to be passing across the magnetic reader head.

FIG. **2**B depicts a credit card device **201***b* according to an embodiment of the present disclosure. Credit card device **201***b* comprises a processor **205** and a memory unit **207**, the processor **205** operatively coupled to the components of credit card device **201***b*. The memory **207** comprises a plurality of accounts **209**, which may be credit card accounts, banking accounts, merchant accounts, online accounts, cryptocurrency accounts, and combinations thereof. A motion detection module **210** is coupled to the processor unit **205** and to a set of motion detection units, which comprise a rate detection assembly **225**, an optical sensor array **230**, and a set of accelerometers **235**. Additionally, a galvanic sensor **275** is coupled to processor unit **205**. The magnetic field is generated via a planar coil **220**, which is controlled by the processor unit **205** via a coil interface **215**. The rate at which the magnetic field changes polarity to encode the user data depends on the rate of relative movement detected by the rate detector. The credit card device **201***b* further comprises a real-time clock **240**, a touch-sensor array **245**, and a display **250**, each operatively coupled to the processor unit **205**. A user input may be made via the touch sensor array **245**, which may comprise a touch screen panel, a keypad, or a combination thereof. The display **250** is able to display an alphanumeric sequence, as well as graphical icons (such as a logo for a bank, or other images). Further, an optional backup power source **255** is depicted. Credit card device **201***b* further comprises a near-field communication (NFC) unit **260**, as well as a radio frequency identification (RFID) unit **265**, both of which are operatively coupled to the processor unit **205**. In one embodiment the NFC and RFID may share the planar coil for use as a RF antennae, through the coil interface **215**. In one embodiment one or both the NFC and the RFID may have antennae dedicated to that individual sub-system. A universal serial bus (USB) connector **270** is coupled to the processor unit **205**. The functionality of the components with regard to exemplary uses of credit card devices **201***a* and **201***b* is described in greater detail in the following description.

A further aspect of the present disclosure provides a single credit card device that can be used for multiple banks or financial institutions. For example, instead of carrying a separate credit card for each account of a variety of credit card companies, a customer need only to carry a single card according to embodiments of the present disclosure. The capability of the credit card device to generate a multitude of credit card numbers provides the ability of the credit card device to be associated with multiple accounts. Furthermore, inputs at the touch sensor array on the credit card device can be used to select the appropriate bank or credit provider account stored in the memory unit of the credit card device.

FIG. **2**C depicts a process of selecting an account from a plurality of stored accounts in order to perform a transaction with the selected account, according to an embodiment of the present disclosure. The process **280** begins at step **282**, where a plurality of accounts stored by the credit card device memory is displayed. The plurality of accounts **209** are stored by memory **207**, and are displayed using display **250**. A user indicates an account selected from the plurality of accounts at step **284**. The selection is able to be made by keypad or touch sensor array **245**, and an indication of the selected account can be displayed via display **250**. At step **286** the credit card device is configured according to account information associated with the selected account, which may include an account number, an expiration date, and other user information associated with the account (e.g. a username, PIN, password, email address, etc.). At step **288** the planar coil of the credit card device is encoded with a limited-duration credit card number that is associated with the selected account. The limited-duration credit card number is able to be generated according to the selected account, a timestamp, a transaction amount, an indicated merchant, user key or secrets, on-card unique hardware secrets, credit card authority key or secrets, user input from the card interface, and other information associated with the transaction.

Movement Rate Feedback

The relative movement rate of credit card device **201***a* is detected by one or more of the set of motion detection units, comprising the rate detection assembly **225**, the optical sensor array **230**, and the set of accelerometers **235**. Each of the motion detection units detects the motion of the credit card

201*a* in a distinct manner. The rate detection assembly **225**, which is positioned alongside (but independent of) the planar coil **220**, is able to detect the location of a magnetic head reader as the rate detection assembly **220** is being passed through the credit card reader. The reader module of a conventional credit card reader comprises a metal head having a small gap at the tip of the head. A pickup armature resides in this gap, such that as the metal head passes over a credit card strip, an electric field is induced in the head reader pickup circuit. In one embodiment the rate detection assembly **225** is constructed of an array of auxiliary inductor coils and magnetic pickup coils. As the metal head of the card reader assembly passes over the arrangement of auxiliary inductor coils and magnetic pickup coils of the rate detection assembly **225**, a disturbance in the magnetic field flowing between the two is induced, generating a change in current and producing a detected movement signal. The change in current is detected by the motion detection module **210**, and is used to determine the rate of motion of the card reader head passing across the surface of the credit card device **201***a* (and therefore along the planar coil **220**).

The optical sensor array **230** is also operable to detect a movement rate of the credit card device **201***a* with respect to a conventional magnetic card reader. The optical sensor array **230** is disposed nearby the planar coil **220**, in order to accurately detect a movement rate in the region of the planar coil **220**. In an embodiment, the optical sensor array **230** is a thin strip parallel to, and extending along, the length of the planar coil **220**. The optical sensor array **230** determines a location of a minimum of received light, which corresponds to the region of a surface in nearest proximity to the optical sensor array **230**. The magnetic reader head of a conventional magnetic card reader extends furthest from the surface of the card reader, and therefore the detected minimum in received light at the optical sensor array **230** corresponds with the location of the reader head. By tracking over time the position of this minimum received light along the optical sensor array, a detected movement rate may be found.

The set of accelerometers **235** are also operable to detect a movement rate of the credit card device **201***a*. The set of accelerometers **235** are positioned in the credit card device **201***a* in order to effectively measure the position and acceleration of the credit card device **201***a*. In an embodiment, the set of accelerometers comprises groups of accelerometers, each group having one or more accelerometers disposed at orthogonal planes to each other, and each group capable of generating signals that allow for determination of the orientation, motion and acceleration of the credit card device **201***a*.

The detected movement signal is received by the motion detection module **210**. The detected movement signal is generated by any one of the set of motion detection units, or any combination of motion detection units of the set. For example, the movement detection signal is able to be generated by the combination of the rate detection assembly **225** and the optical sensor array **230**. In an embodiment, the movement detection module **210** is able to determine the movement rate of the credit card device **201***a* from the detected movement signals, and transmits the determined movement rate, and orientation to the processor unit **205**. In an embodiment, the motion detection module **210** sends the detected movement signal to the processor unit **205**, and the processor unit **205** determines the relative movement rate.

In one embodiment, the generation of the magnetic field by the planar coil **220** at a specified rate of alternating polarity is accomplished according to the following description. One or more of the motion detection units in the set of motion detection units (rate detection assembly **225**, optical sensor array **230**, and set of accelerometers **235**) detect a movement rate of the credit card device **201***a* with respect to a magnetic card reader, and signal the motion detection module **210**. The movement rate is provided to the processor unit **205**, which determines the appropriate rate for alternating the polarity of the magnetic field generated by the planar coil **220**. The processor unit **205** outputs instructions or data to the coil interface **215** at the determined rate, which in an embodiment is a digital-to-analog converter (a DAC) and acts to translate the signal from digital to analog in order to drive the planar coil **220** and produce the magnetic field. The instructions from the processor unit **205** are comprise binary code, which are output through a shift register to the coil interface **215**. The shift register outputs data at a rate proportional to the determined movement rate of the credit card device **201***a*—thus, a higher determined credit card device **201***a* movement rate has a corresponding higher output rate at the shift register, leading to a higher rate of alternating polarity at the generated magnetic field (i.e., encoded data symbols output more quickly). Conversely, a lower movement rate of credit card device **201***a* leads the processor unit **205** to control the shift register to output data at a lower rate, and consequently the rate of alternating polarity in the generated magnetic field is lower.

FIG. **3** illustrates an exemplary process **300** for determining the rate to alternate the polarity of the generated magnetic field of the credit card device, according to an embodiment of the present disclosure. At step **301** the process determines if a standard magnetic card reader is detected to be in proximity with the credit card device. If NO, the step repeats. IfYES, the process moves to step **303**. At step **303** a detection of a movement rate at which the body of the credit card device is moving relative to the standard magnetic card reader is made. The process continues at step **305**, wherein a magnetic field is generated by an inductor assembly comprised by the credit card device, the magnetic field having a target rate of alternating polarity that is based on the detected movement rate from step **303**. The process then repeats at step **301**, determining if a standard magnetic card reader is (or remains) in proximity to the credit card device. In this manner, while a standard magnetic card reader is detected to be in proximity to the credit card device, the movement rate of the credit card device is determined and the polarity and orientation of the generated magnetic field is alternated at the appropriate rate, to recreate the data as described above, at the correct rate, in order to clock out the data to be conveyed to the magnetic strip reader, at a rate matching the action of an ordinary magnetic strip card through same said magnetic card reader.

Security

Security is an area of concern for credit card holders, as the small form factor makes theft quite easy, and additionally there are many ways for a malicious third-party to record the account number of a credit card in order to later make fraudulent transactions on the account. Embodiments of the present disclosure address security concerns of a credit card owner on several fronts.

In one aspect, security of the credit card device is enhanced by providing a means of locking the credit card device in order to prevent use, until such time that a valid user input is entered. Embodiments of the present disclosure provide a credit card device having a region for receiving human input, e.g., touch sensors which are able to be formed by contacts that a user can press (e.g., the touch sensor array **245** of FIGS. **2**A-**2**B). FIGS. **4**A-**4**B illustrate a user interacting with a credit card device **401** via a keypad or touch sensor array **445**. In FIG. **4**A, the credit card device **401** is in a locked state. A display **450** is able to display a message to the user, for

instance, the message "device locked" or "enter password," or question prompts which guide the user to respond with answers through said key-pad or said touch sensor, to certain preset questions, that confirm personal knowledge known only to the associated user. The touch sensor array **445** enables user interaction with the credit card device **401**. An exemplary use of the touch sensor array **445** is an input of a currency amount to be used in a transaction. The touch sensor array **445** is able to include buttons, or a touch-sensitive pad, or a combination of the two. Other embodiments of the touch sensor array **445** allowing a user to input data to the credit card device **401** are consistent with the spirit and scope of the present disclosure.

In order to unlock the credit card device **401** and enable a transaction or other usage, the user inputs data via the touch sensor array **445**. FIG. **4**B illustrates the user inputting a password via a gesture **470**, which operates to unlock the credit card device **401**. The display **450***b* is able to display a message indicating the credit card device **401** is unlocked and ready for use, for instance, display **450***b* may display the message "unlocked," or it may display an account number associated with the credit card device **401**.

Embodiments of the present disclosure provide additional functionality for the touch sensor array **445**. For example, there may be touch contact terminals that a user can press to wake up the credit card device **401**, to cause the battery to supply power, or to place the credit card device **401** in a power reduction mode when it is not being used. In an embodiment, if any number other than the correct password is entered multiple times, or if there is an attempted usage of the credit card device **401** without entering in a password, an automatic phone call may be triggered to the appropriate fraud protection authorities.

In one embodiment of the present disclosure, the display **450** is a thin-film liquid crystal display ("LCD"). The display **450** is able to have multiple uses. In one embodiment, the display **450** can be used to cue the user for a security question upon input of an improper password. Or if fraud protection services need to contact a customer, they can verify the customer's identity by transmitting a security question to the display **450** of user's credit card device **401**, to which the user would need to respond correctly using the input buttons of touch sensor **445** on the card.

Limited-Duration Credit Card Number

A further security feature of the credit card device provided in the present disclosure is the capability of producing a limited-duration credit card number for performing transactions using accounts of the card. The credit card device comprises a real-time clock that is able to produce a cryptographically protected timestamp for each interaction. The power source is able to activate the processor unit such that a unique number may be generated by the credit card device and verified by the credit authority according to the timestamp and the transmitted user information. The limited-duration credit card number is able to be produced at the time the credit card device is performing a transaction, and is able to be generated according to the user's private information, a bank information, information regarding the facility performing the transaction, and the time of day. The limited-duration credit card number is able to be limited to only one transaction, a finite number of transactions, or may be limited to a specified period of time—e.g., 2 minutes, 10 minutes, 3 hours—after which time that particular limited-duration number would become invalid. As detailed above, if an expired limited-duration credit card is attempted to be used for a transaction, the transaction is denied and an automatic notification is able to be made to a credit authority in order to notify the user and to prevent transactions on the account. The transaction count is able to be determined through the action of passing the card through magnetic reader, and the process of transmitting said card number to said card reader.

In one embodiment, the number on the front of the card is able to be a full or partial number. In an embodiment, the number displayed on the credit card device is a static number, but the number transmitted during a transaction is a limited-duration credit card number as described above. The number displayed on the credit card device may not necessarily be a static number. For example, the first four and last four digits of the credit card number are able to be fixed, while the remaining eight digits can be dynamically generated. As the credit card is read by the machine, part or all of the number may be dynamically produced at the time the card is read. As described above, the dynamic part of the limited-duration credit card number generated may be based on the user's private information, the user's bank information, the time of day or the facility that is reading the card. Further, the expiration date of the credit card device can also be dynamically generated.

Effectively, embodiments of the present disclosure provide a credit card device that has no fixed number, and therefore the account cannot be compromised. Only the number generated at the instant of the credit card transaction matters. Accordingly, unauthorized use of the credit card device is highly unlikely, because a transaction cannot be conducted with an expired limited-duration credit card number, or only the static portion of the credit card number. In one embodiment of the present disclosure, sufficient dynamically generated numbers are provided for on the credit card such that a unique credit card number can be generated for each transaction. In this embodiment, the credit card of the present disclosure effectively acts as a unique per-transaction credit card.

In one embodiment, the process steps enabling a card transaction are as follows. A credit card device (e.g., credit card device **201***b*) is connected to a computer system (e.g. computer system **590**), via any of the connection means available to the credit card device (USB **270**, NFC **260**, and RFID **265**). User data and other essential information, such as account information, are downloaded to the credit card device. For example, for an account designed for online transactions, user account information will likely include an account email and an account password. The account may be for example a bank account, a credit account, a merchant account, an online transaction account, or a cryptocurrency. In one embodiment a currency amount is also downloaded, which is made accessible to the credit card device **201***b* for transactions. In an alternative embodiment, rather than a currency amount being downloaded to the credit card device **201***b*, the user account information (e.g., username and password) is stored such that a subsequent authorized credit card device **201***b* transaction is automatically pre-authorized to deduct (or credit) the entered transaction amount at a stored account. In an embodiment, a user uses the touch sensor array **245** of the credit card device **201***b* in order to input the user information, including the amount of currency to be stored. The information entered by the user is able to include an account source of a transaction (e.g., bank account, credit account, merchant account, ATM, online payment service, or a cryptocurrency), as well as a type of transaction to be made (e.g., as a debit card, as a credit card, or as a user account). In another embodiment, the information is entered using the computing system to which the credit card device **201***b* is connected.

Transactions may be authenticated on the specified account by entry of the username and password for the

account during the transaction, using the touch sensor array **245**. In an embodiment, a password for an account is represented by a user input (such as a gesture, a swipe, and/or an unlock keycode) which is entered on credit card device **201***b* during a transaction for account authentication. According to an embodiment of the present disclosure, a user that has "primed" the credit card device **201***b* for a transaction has already performed a security authentication on the card, and therefore a subsequent card transaction is able to be pre-authorized to perform the transaction without further user authentication steps. The priming action can be a tap of the credit card device **201***b* detected by accelerometers **235**, or a gesture, swipe, or a key input received by touch sensor array **245**.

A transaction is able to be communicated using the planar coil **220**. In one embodiment, when the transaction is a credit card transaction, a limited-duration credit card number is generated. A user inputs an amount for the transaction using the touch sensor array **245**, and the limited-duration credit card number is generated to correspond with the entered amount. The binary data corresponding to this limited-duration credit card number is sent from the processor unit **205** to the coil interface **215**, where it is converted to an analog signal in order to drive the planar coil **220** to generate a magnetic field having an alternating polarity corresponding to the encoded data of the limited-duration credit card number.

Online Transactions

FIG. **5** displays the credit card device **501** in connection with a computing device **590**. In one embodiment, the credit card device **501** is able to be used to make online purchases. In one embodiment, the credit card device **501** is equipped with a means **570** for communicating with the USB port on a computer or other device in order to make online purchases. In one embodiment the credit card device **501** may have an area cut-out, such that contact terminals corresponding to a USB cable connector are contained within, enabling connection of a USB cable (e.g., a micro-USB connection). When performing online transactions, the credit card device **501** can uniquely generate a limited-duration credit card number (as described above) for online purchases. The credit card device **501** receives a user input indicating that a transaction is imminent, and an authorization. The user input is able to comprise a gesture, a swipe, a key input sequence, and combinations thereof. The limited-duration credit card number is able to be displayed on the front display of the credit card device **501**. In one embodiment, the credit card device **501** is able to use RFID **265** or near field communication NFC **260** technology in order to connect to a personal computer **590**. This enables a per-transaction, limited-use credit card number, enhancing the security of the credit account by substantially negating the possibility of a theft of the credit card number used to perform the transaction leading to account compromise.

According to an embodiment, the transaction is able to include information regarding a user account, such as an email address of the user, and upon reconnection of credit card device **201***b* to a computer system (for instance, computer system **590**), the transaction information stored on credit card device **201***b* could be "replayed" by the computer system in order to finalize the transaction.

In one embodiment, a means of limiting an available credit amount are provided. According to the download process described above, the credit card device is able to have a total credit available. The credit card device is able to reference the total credit available in subsequent transactions, and will provide limited-duration credit card numbers corresponding to amounts up to, but not exceeding, the remaining credit available to the credit card device. An attempt to perform a transaction having an amount exceeding the remaining credit available will not result in a valid limited-duration credit card number, and therefore an authenticated transaction cannot proceed. In general, the credit card device will only successfully generate a limited-duration credit card number if the proper conditions for a transaction are determined to be present. The proper conditions for a transaction comprise a correct identification having been made by the user (via a gesture, swipe, and/or key input) and an amount for the transaction indicated to be less than the total credit available to the account indicated for the transaction.

Card-to-Device Transactions

In addition to transactions performed using conventional magnetic card readers (such as at point-of-sale locations, banks, and automated teller machines (ATMs)) and via cable connection with a computing device, transactions performed wirelessly between a card and a device (e.g., card-to-card, card-to-computer device having a reader dongle, card-to-ATM) are provided according to embodiments of the present disclosure. For simplicity, the following describes a card-to-card transaction, but it will be understood that card-to-device transactions are similarly provided.

FIG. **6** illustrates a card-to-card transaction according to one embodiment. A first credit card device **601***a* comprises a display **650***a*, and is in contact with a second credit card device **601***b*. A contact interaction between the cards is indicated by interaction **680**. In one embodiment, the contact interaction is a tapping of credit card device **601***a* against credit card device **601***b*. In another embodiment, an optical sensor array at one or both of the cards detects interaction **680**. In another embodiment, interaction **680** indicates a swipe of credit card device **601***a* across credit card device **601***b*. In one embodiment a user input through said key-pad initiates and enables a transaction from first card to second card. In one embodiment the presence of second card in preparation for card to card transaction is confirmed through "polling", the process of which involves transmission of data between cards, and confirmed receipt of transmitted data by response received from second card received at first card, including information confirming receipt of said information, by second card.

The planar coil comprised by each of credit card device **601***a* and credit card device **601***b* is able to be a means of transferring information for a transaction, e.g., such as an antenna. Once either, or both, of credit card device **601***a* and credit card device **601***b* detect interaction **680**, a transaction is able to be completed via generation of a magnetic field at one card and reception of the magnetic field (i.e., reading) at the other card. In this manner, the card (e.g., credit card device **601***a*) receiving the transaction information operates its planar coil in an antenna mode. This enables credit card device **601***a* and credit card device **601***b* to authentically perform a transaction, and to transfer a currency between credit card device **601***a* and credit card device **601***b*. As described above, in an embodiment the transaction is able to use a limited-duration card number to encode the transaction.

In an embodiment, a set of accelerometers is used to detect the beginning of the transaction, for instance, a transaction performed by a swipe of credit card device **601***a* across credit card device **601***b*. Further, the set of accelerometers can detect a "priming" action for a credit card device, i.e., an indication for a credit card device that a transaction is imminent. The priming action can be a tap of the credit card device **601***a*, or tapping the credit card device **601***a* against the credit card device **601***b*. In one embodiment, a touch sensor array is able to be used for the priming action.

In an embodiment of a card-to-card transaction, one card (e.g. **601***a*, the card of the user having a currency debit) generates the limited-duration credit card number, which is transmitted via the card's planar coil. The credit card device of the recipient (e.g., **601***b*, the card of the user receiving a currency credit) receives the encoded data via the planar coil, acting as an antenna, and the coil interface is able to convert the received signal into a digital signal understood by the processor to be the limited-duration credit card number, identifying both the correct account and the amount of the transaction.

In one embodiment, the credit card device **201***b* stores cryptocurrency information in processor unit **205**. The cryptocurrency information stored is able to include a plurality of cryptocurrency addresses, a plurality of private keys, and a plurality of public keys. The credit card device **201***b* is able to perform a transaction, as described above, using a cryptocurrency as the specified account. In one embodiment, the credit card device **201***b* is able to hash a portion of the transaction, using the processor unit **205** and the real-time clock **240** along with user information pertinent to the cryptocurrency account and the transaction. A subsequent connection of the credit card **201***b* to a computing device provides a means of connecting to the cryptocurrency servers and finalizing the transaction. Further, the credit card device **201***b* is able to sign a cryptocurrency transaction by, for instance, receiving a prompt at the display **250** to input a dynamic PIN specific to the transaction, which is able to be entered by touch sensor array **245**.

In a card-to-card cryptocurrency exchange, a record of the transaction can be made according to the following. A first card (e.g. **601***a*) making a deduction with an amount indicated via touch sensor array **245** is able to generate a record of the transaction and store the record in the card memory, while a second card (e.g. **601***b*) receiving the cryptocurrency is able to generate a confirmation of the received transaction amount. In one embodiment, the amount indicated is provided by the receiving card **601***b*. The hashed record of the transaction contains the unique information of each user, along with the transaction amount. The success or failure of the transaction is able to be displayed on the respective displays of credit cards **601***a* and **601***b*.

Account Theft and Unintended Use Prevention

A security concern for conventional credit cards utilizing wireless communication means is the ability of a thief to access and/or copy user information through un-detected interaction with the wireless communication means. Sensitive and confidential information can be gleaned via, for example, "listening-in" on an RFID interaction between a credit card and a contactless reader, recording the characteristics of the interaction, and replicating certain characteristics to fake an authorized transaction. While to a great extent security concerns are addressed by the usage of limited-duration credit card numbers and other security features provided for by the credit card of the present disclosure and previously described, a further security feature regarding the wireless communication means of the credit card device is described herein.

In one embodiment, wireless communication means of the credit card device **201***b* are in a powered-down, or disabled, state prior to receiving an authenticated activation signal from a user. Upon receiving the activation signal, the communication means (e.g., NFC **260**, RFID **265**, and planar coil **220**) are activated, enabling the credit card device **201***b* to conduct a transaction. The activation signal can originate from one (or a combination) of the set of motion detection units (rate detection **225**, optical sensor array **230**, and accelerometers **235**), the touch sensor array **245**, and the galvanic sensor **275**. The galvanic sensor **275** is operable to detect a contact of human skin, via a current produced at the sensor **275** upon such contact. In an embodiment the galvanic sensor **275** is comprised of metallic contacts disposed on opposite sides of, and isolated by, the body of credit card device **201***b*. In one embodiment, the current produced by user contact with the galvanic sensor **275** contacts is sufficient to provide small amounts of energy in order to power components of the card. For example, energy produced is able to power the processor unit **205** and the RFID **265**. In one embodiment the galvanic sensor **275** further comprises two conducting surfaces separated by a junction, and the galvanic sensor **275** is configured as a thermoelectric generator (e.g., via the Peltier effect, the Seebeck effect, or a combination). For example, heat applied at one surface of the credit card device **201***b* may lead to differential heating between the opposing, separated conducting surfaces of the galvanic sensor **275**, generating an electric current and powering a subset of, or all of, the components of credit card device **201***b* (e.g., the processor unit **205**, the NFC **260**, and the RFID **265**).

In an embodiment, the communication means are activated only so long as the activation signal continues to be detected. In another embodiment, the communication means are activated for a specified amount of time following detection of the activation signal. For example, if using the credit card device **201***b* in an ATM (or other device) preventing continuous human contact, the activation signal is able to be a swipe, gesture, or key input sequence entered via the touch sensor array **245**, which activates the card for a specified duration (for instance, one minute). In an embodiment the detection of motion through accelerometer input indicates activation by a valid user. In one embodiment the specific motion detected through accelerometer input corresponding with a specific user action, such as a "flick", "swipe", "spin", "wave", "tap," may be used to initiate activation, wherein said motion is not normally generated at idle and during periods of inactivity. For example said motion not being generated accidentally while said card is stored in a user's wallet, carried while the user is actively moving, or is being handed from user to a clerk at a point of transaction. In one embodiment the specific motion, or sequence of motions, may be associated with a user, and stored on said card memory, such that performing the correct sequence when prompted can confirm the possession of the card by the known owner, thus initiating activation and enabling usage.

FIG. **7** depicts a process of selectively enabling the communication capability of the credit card device according to an embodiment of the present disclosure. The process **700** begins at step **701**, where an input signal is received at the credit card device from a user. The input signal is able to be generated by any one, or combination, of a plurality of input means, where the input means comprise: a swipe gesture received at a touch sensor array; a key press sequence; an accelerometer sensor indication of credit card device motion; and a galvanic sensor indication that the credit card is in a user grasp. The input received from the user enables operation of a near-field communication (NFC) unit of the credit card device. In one embodiment, the NFC unit is disabled prior to receiving the input signal. In one embodiment, an RFID communication unit is disabled prior to receiving the input signal, and is activated by the input signal. In one embodiment, the planar coil is disabled prior to receiving the input signal, and is activated by the input signal.

The credit card device, following enablement of the NFC unit, receives an indication of an amount of currency for a transaction at step **703**. At step **705**, the credit card device

generates a limited-duration credit card number, which at step **707** is transmitted to a recipient of the transaction. In one embodiment, the limited-duration credit card number has a limited recurrence, and is limited in scope of use to a predetermined number of authorized transactions.

In the foregoing description of process **700**, the ordering of the process steps is exemplary and should not be construed as limiting. Alternative ordering of the process steps is consistent with the present disclosure, as conceived by one skilled in the relevant art.

The foregoing description, for purpose of explanation, has been described with reference to specific embodiments. However, the illustrative discussions above are not intended to be exhaustive or to limit the invention to the precise forms disclosed. Many modifications and variations are possible in view of the above teachings. The embodiments were chosen and described in order to best explain the principles of the invention and its practical applications, to thereby enable others skilled in the art to best utilize the invention and various embodiments with various modifications as may be suited to the particular use contemplated.

Embodiments according to the invention are thus described. While the present disclosure has been described in particular embodiments, it should be appreciated that the invention should not be construed as limited by such embodiments, but rather construed according to the below claims.

What is claimed is:

1. An apparatus comprising:

a thin card shaped sized body;

a memory operative to store a plurality of identification data;

a processor coupled to the memory;

a user interface for selecting a select identification data of said plurality of identification data;

a magnetic card reader detection unit for determining if the body is adjacent to a standard magnetic card reader; and

an inductor assembly coupled to the processor and integrated into the body, the inductor assembly under processor control for generating a magnetic field of alternating polarity responsive to the body being detected as adjacent to a standard magnetic card reader, the magnetic field generated in a region substantially encompassing the standard magnetic card reader, wherein the magnetic field encodes said select identification data, and wherein the magnetic field is operable to be read by a magnetic read head of the standard magnetic card reader.

2. The apparatus of claim **1**, further comprising a rate detection assembly disposed adjacent to the inductor assembly, wherein the rate detection assembly is operable to detect a movement rate at which the body is moved relative to the standard magnetic card reader.

3. The apparatus of claim **2**, wherein the processor determines an alternating polarity rate of said magnetic field according to the detected movement rate of the body through the standard magnetic card reader, and wherein the select identification data is encoded at a rate according to the alternating polarity rate.

4. The apparatus of claim **2**, wherein the rate detection assembly comprises a set of motion rate detection units comprising: a plurality of inductor coils and companion magnetic-field pickup coils; an optical sensor array; and a plurality of accelerometers, and wherein the movement rate is determined from at least one of the set of motion rate detection units.

5. The apparatus of claim **1**, further comprising a real-time clock which generates a sequential parameter when the inductor assembly is read by the standard magnetic card reader, wherein the sequential parameter is combined with any of a user information, a transaction identifier, a user secret, and a credit card authority secret to generate a limited-duration credit card number.

6. The apparatus of claim **5**, wherein the limited-duration credit card number has a limited recurrence, and is limited in scope of use to a predetermined number of authorized transactions.

7. The apparatus of claim **1**, wherein the body is of substantially similar dimensions to a standard credit card, and wherein the inductor assembly is a planar coil which is a looped inductor having dimensions substantially equal to, and along the axis of, a standard credit-card magnetic strip.

8. A method of performing a transaction, said method comprising:

receiving an input signal at a credit card device from a user enabling operation of an inductor assembly of the credit card device;

receiving an indication of an amount of currency for a transaction;

generating at said credit card device a limited-duration credit card number; and

transmitting said limited-duration credit card number from said credit card device to a recipient of the transaction.

9. The method of claim **8**, wherein the input signal is generated by at least one of a plurality of input means, wherein the plurality of input means comprise: a swipe gesture received at a touch sensor of the credit card device; a key press sequence received at the touch sensor; an accelerometer sensor indicating motion of the credit card device; an action and sequence of motions of the card as performed by a user; and a galvanic sensor indicating the credit card being in a user grasp.

10. The method of claim **9**, wherein the credit card device is in a power-reduction state and the inductor assembly is disabled prior to receiving the input signal.

11. The method of claim **8**, wherein the limited-duration credit card number has a limited recurrence, and is limited in scope of use to a predetermined number of authorized transactions.

12. The method of claim **8**, wherein the transaction comprises a cryptographic hash of a transaction unit, wherein the cryptographic hash is processed and stored by at least one of the credit card device and the recipient of the transaction.

13. The method according to claim **12**, wherein the transmitting further comprises transferring a record of the transaction.

14. The method according to claim **8**, further comprising displaying, at the credit card device, information regarding the limited-duration credit card number, a time, a passcode, a sequence code, the amount of currency for the transaction, and other transaction information of the user, a merchant, a bank or a credit card authority.

15. A credit card device comprising:

an inductor assembly;

a touch sensor array;

a display;

a motion rate detection array;

a memory configured for storing a user data and a currency amount; and

a processor operatively coupled to the inductor assembly, the touch sensor array, the display, the motion rate detection array, and the memory; and

wherein the processor is configured to initiate a transaction by detecting proximity of the motion rate detection array and a magnetic card reader detection unit, and an input

of user information, input via said touch sensor array, wherein the transaction comprises an exchange of stored currency and said user data via the inductor assembly.

16. The credit card of claim **15**, wherein the motion rate detection array comprises a set of motion rate detection units comprising: a plurality of inductor coils and companion magnetic-field pickup coils; an optical sensor array; and a plurality of accelerometers, and wherein the proximity is determined from at least one of the set of motion rate detection units.

17. The credit card device of claim **15**, wherein the user information comprises one or more of:

an introduction of a transaction-specific identifier;

a confirmation or a denial of an indicated transaction; and

a lock/unlock command determining operation of the credit card device according to an input sequence or a gesture across the plurality of touch sensors.

18. The credit card device of claim **15**, further comprising a real-time clock configured to generate a sequential parameter when the processor initiates a transaction, wherein the sequential parameter is combined with any of a user information, a transaction identifier, a user secret, and a credit card authority secret, and responsive thereto the processor is operable to generate a limited-duration credit card number.

19. The credit card device of claim **18**, wherein the limited-duration credit card number has a limited recurrence, and is limited in scope of use to a predetermined number of authorized transactions.

20. The credit card device of claim **15**, further comprising a USB connector for connection to a standard computing device.

* * * * *