US008462133B2

(12) **United States Patent**
Lynch et al.

(10) **Patent No.: US 8,462,133 B2**
(45) **Date of Patent: Jun. 11, 2013**

(54) **CLICKABLE AND TACTILE BUTTONS FOR A TOUCH SURFACE**

(75) Inventors: **Stephen Brian Lynch**, Portola Valley, CA (US); **John Benjamin Filson**, San Jose, CA (US); **Fletcher R. Rothkopf**, Mountain View, CA (US)

(73) Assignee: **Apple Inc.**, Cupertino, CA (US)

(*) Notice: Subject to any disclaimer, the term of this patent is extended or adjusted under 35 U.S.C. 154(b) by 665 days.

(21) Appl. No.: **12/240,559**

(22) Filed: **Sep. 29, 2008**

(65) **Prior Publication Data**

US 2010/0079403 A1 Apr. 1, 2010

(51) **Int. Cl.**
G06F 3/045 (2006.01)
G06F 3/041 (2006.01)

(52) **U.S. Cl.**
USPC **345/174**; 345/173

(58) **Field of Classification Search**
None
See application file for complete search history.

(56) **References Cited**

U.S. PATENT DOCUMENTS

5,726,400 A * 3/1998 Masuda ..... 200/16 D
6,323,449 B1 * 11/2001 Janniere 200/408
2002/0054030 A1 * 5/2002 Murphy 345/173
2003/0193480 A1 * 10/2003 Nuovo et al. 345/168
2003/0235452 A1 * 12/2003 Kraus et al. 400/472
2005/0088417 A1 * 4/2005 Mulligan 345/173
2007/0257821 A1 * 11/2007 Son et al. 341/22
2008/0029691 A1 * 2/2008 Han 250/224
2008/0150911 A1 * 6/2008 Harrison 345/173
2010/0026635 A1 * 2/2010 Dimitrov et al. 345/173
2010/0053087 A1 * 3/2010 Dai et al. 345/168

FOREIGN PATENT DOCUMENTS

JP 04075219 A * 3/1992

* cited by examiner

Primary Examiner — Alexander S Beck
Assistant Examiner — Kirk Hermann
(74) *Attorney, Agent, or Firm* — Dorsey & Whitney LLP

(57) **ABSTRACT**

Methods and apparatus for provide physical buttons for use on a touch surface are disclosed. According to one aspect of the present invention, an apparatus includes a display arrangement and a first button attachment structure. The display arrangement includes a first surface which has a first touch-sensitive area. The first touch-sensitive area is capable of sensing touch. The first button attachment structure includes a first attachment area and a first button actuation area. The first attachment area is mounted on the first surface such that the first button actuation is aligned at least partially over the first touch-sensitive area. The first button actuation area is arranged to deform when a force is applied to the first button actuation area to engage the first touch-sensitive area.

21 Claims, 10 Drawing Sheets

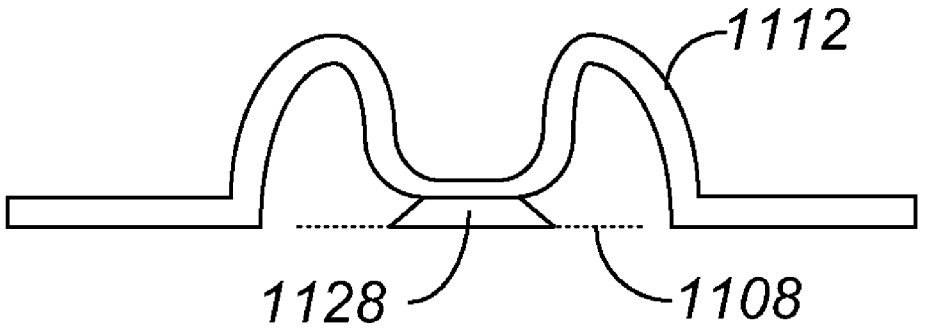

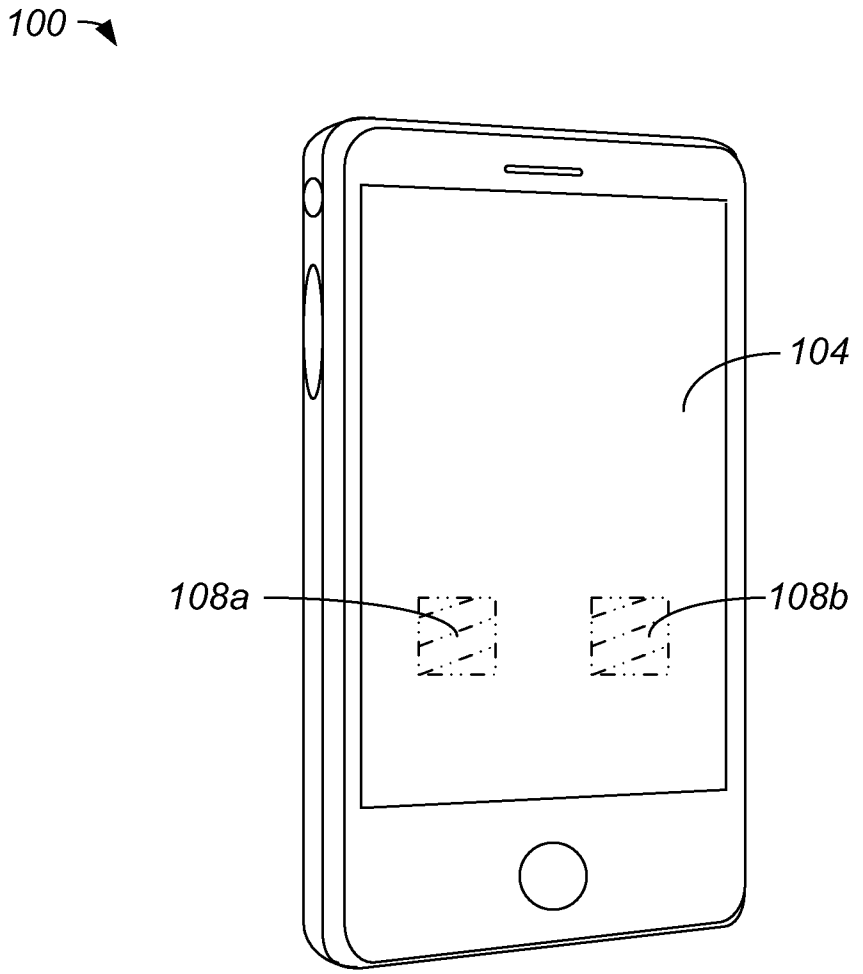

FIG. 1A

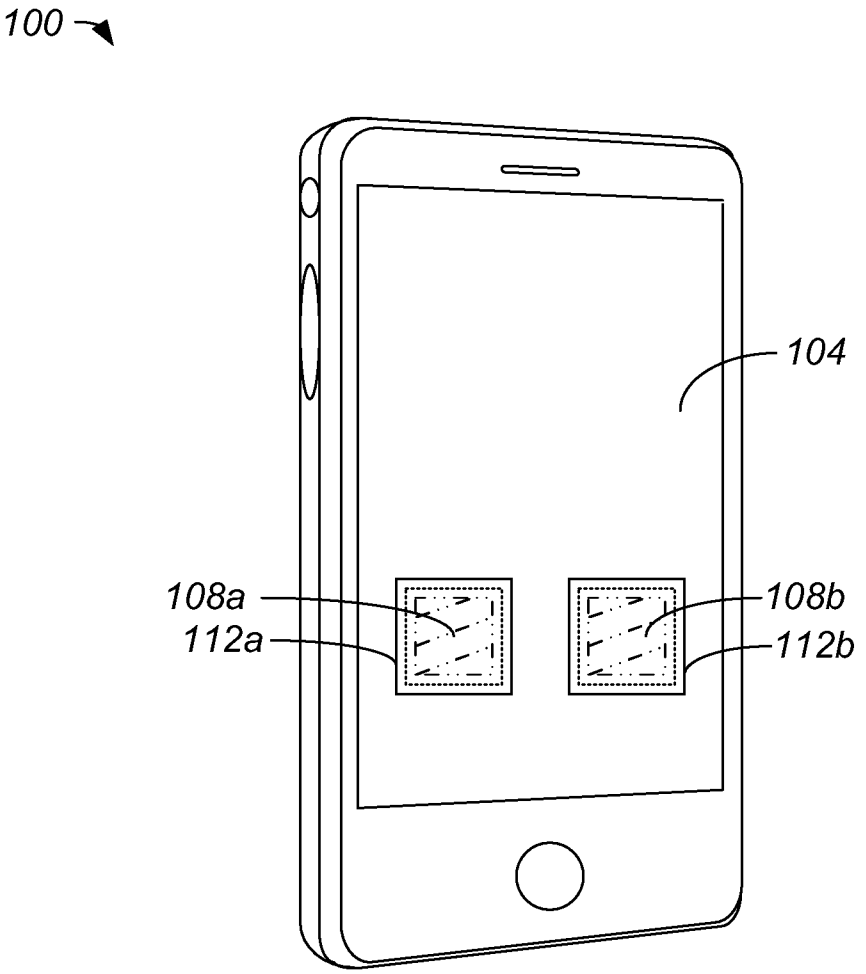

FIG. 1B

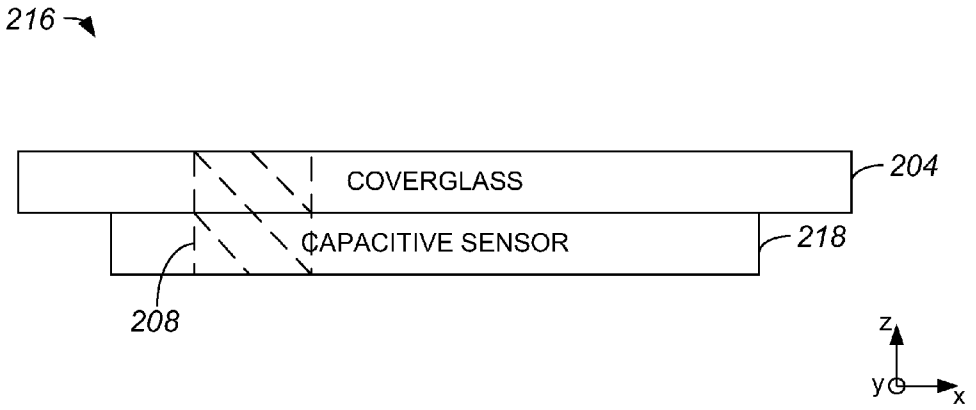
216
COVERGLASS
204
CAPACITIVE SENSOR
218
208
z
y
x

FIG. 2A

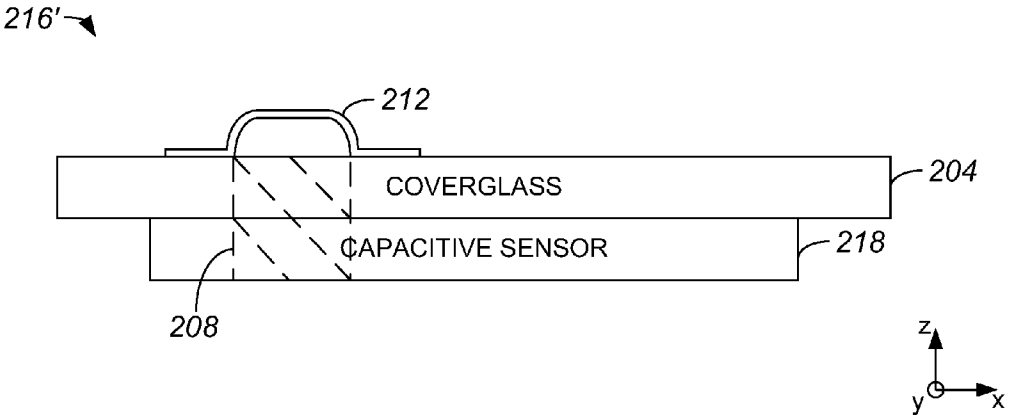
216'
212
COVERGLASS
204
CAPACITIVE SENSOR
218
208
z
y
x

FIG. 2B

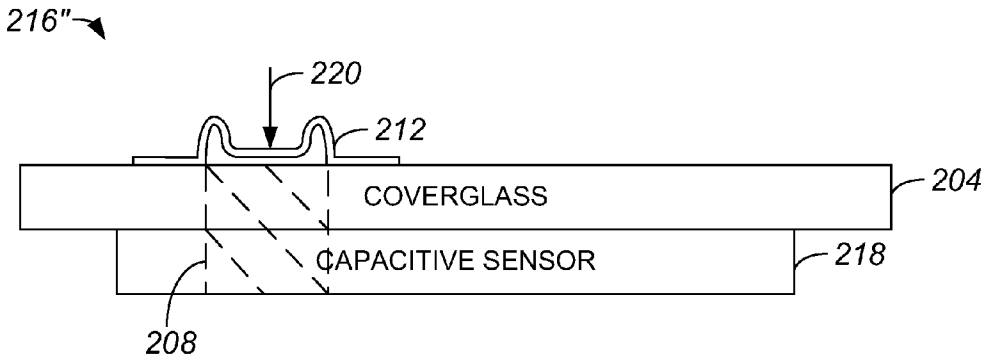
216"
220
212
COVERGLASS
204
CAPACITIVE SENSOR
218
208

FIG. 2C

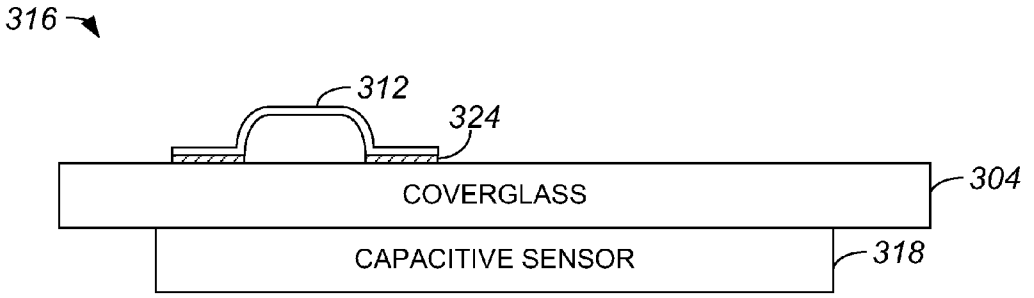
316
312
324
COVERGLASS
304
CAPACITIVE SENSOR
318

FIG. 3

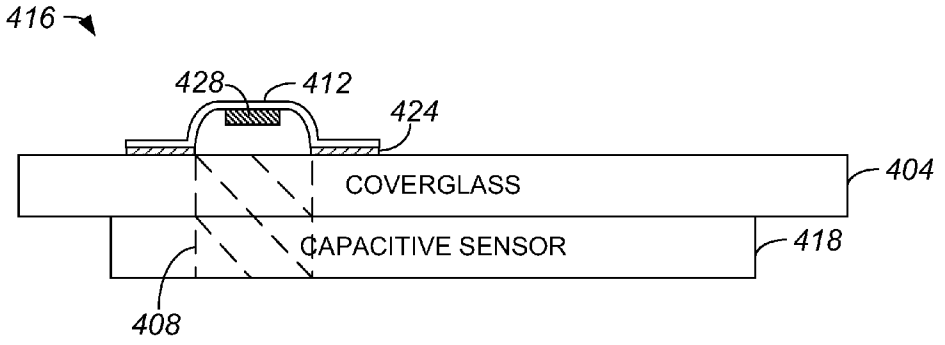
416
428
412
424
COVERGLASS
404
CAPACITIVE SENSOR
418
408

FIG. 4A

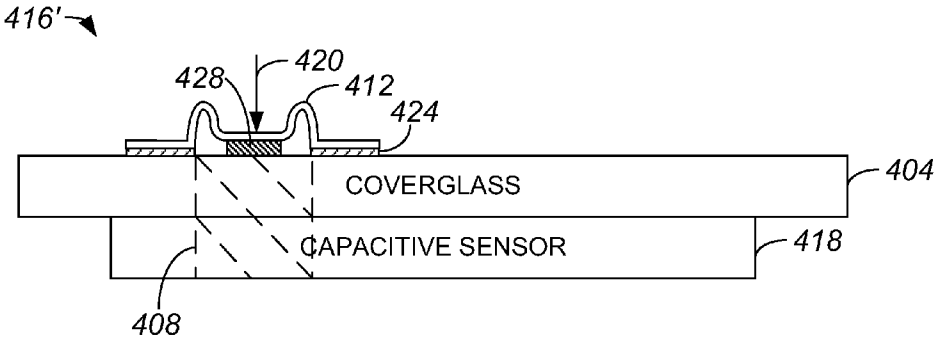
416'
420
428
412
424
COVERGLASS
404
CAPACITIVE SENSOR
418
408

FIG. 4B

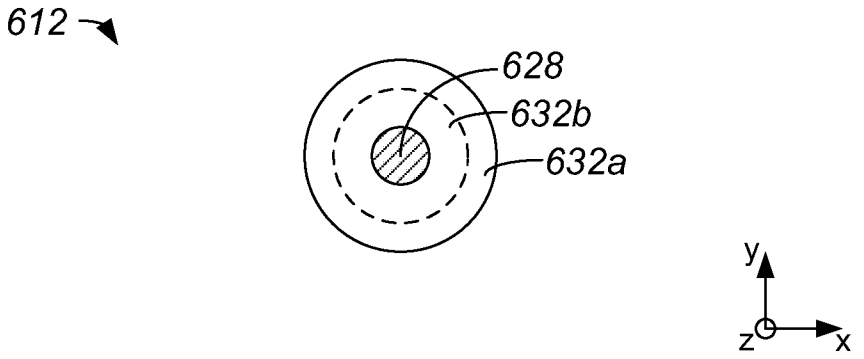

FIG. 5A

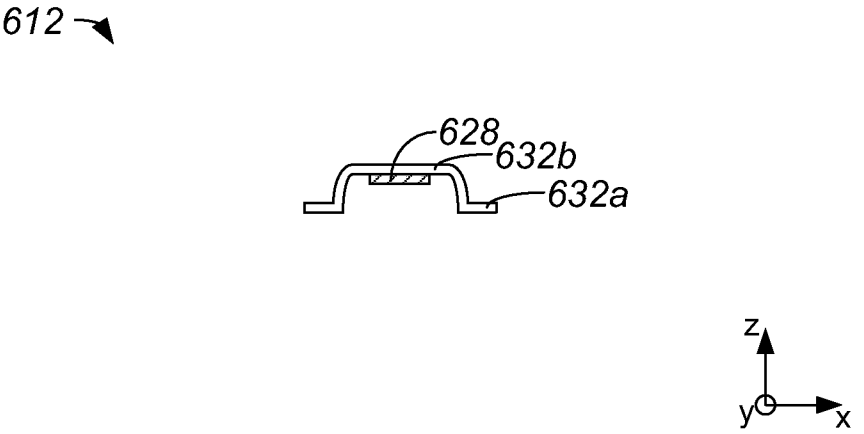

FIG. 5B

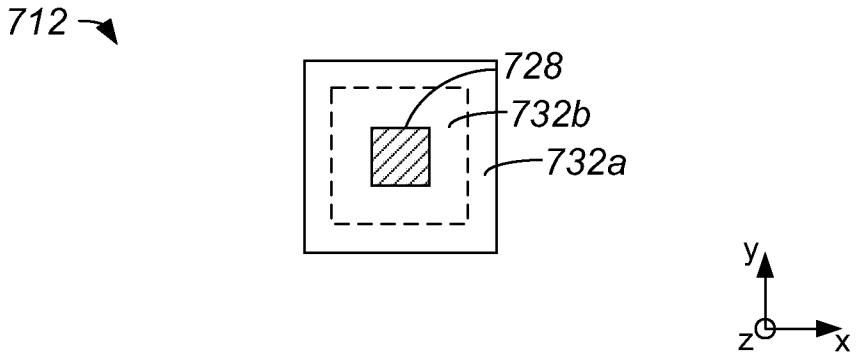

FIG. 6

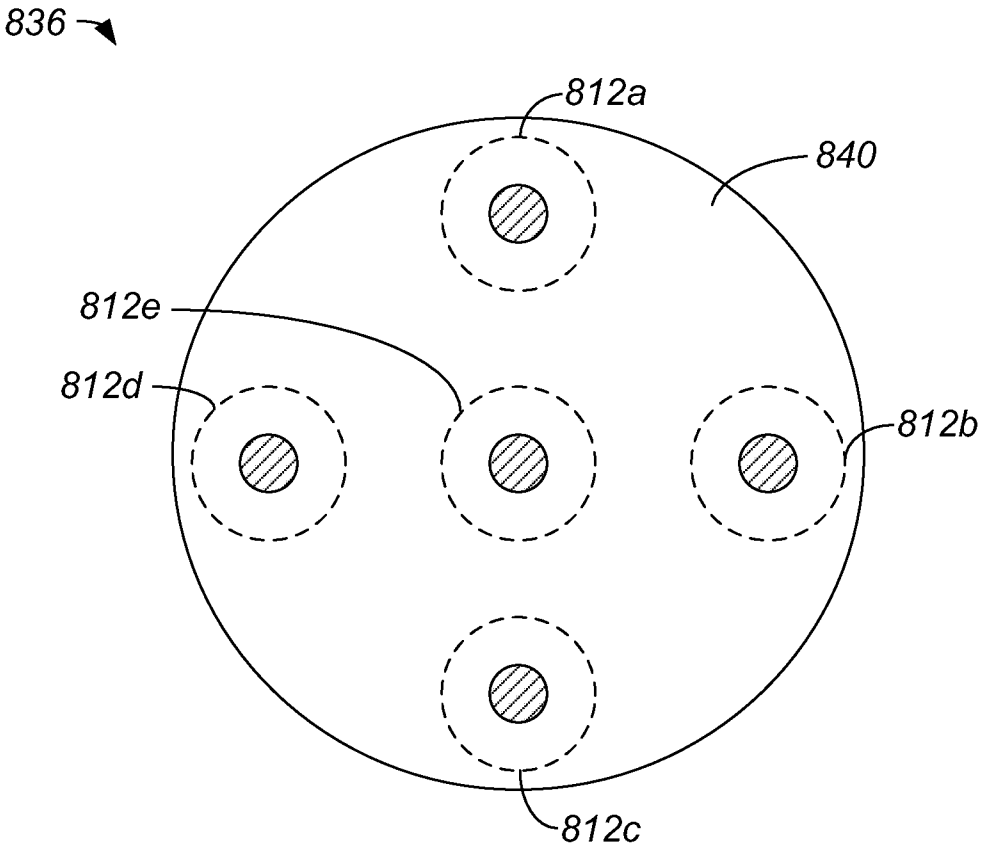

FIG. 7

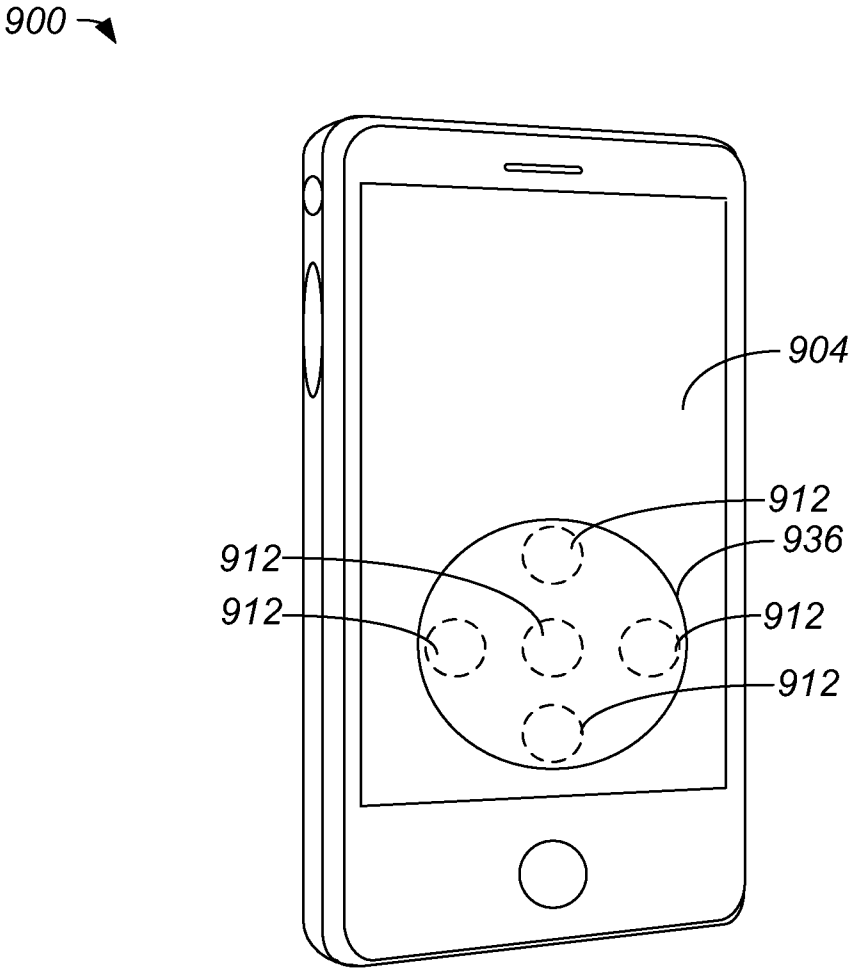

FIG. 8

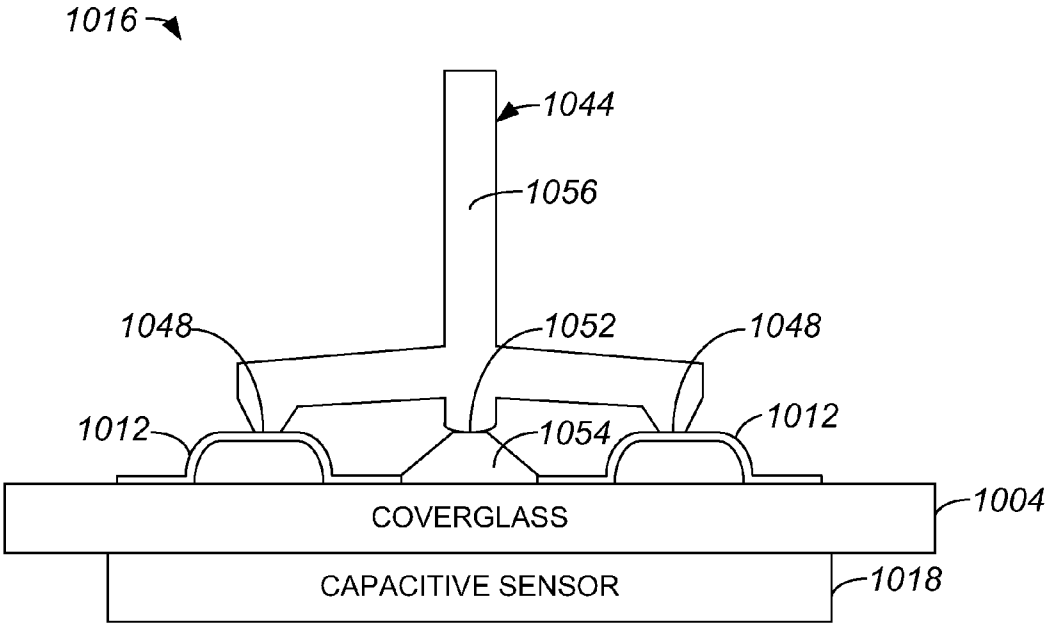
1016
1044
1056
1048
1052
1048
1012
1054
1012
COVERGLASS
1004
CAPACITIVE SENSOR
1018

FIG. 9

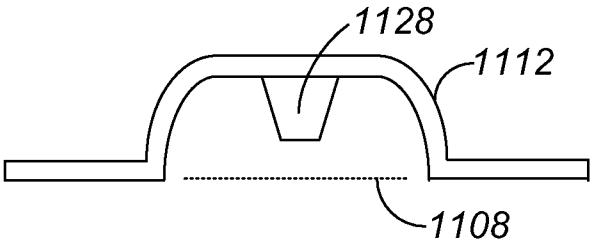

FIG. 10A

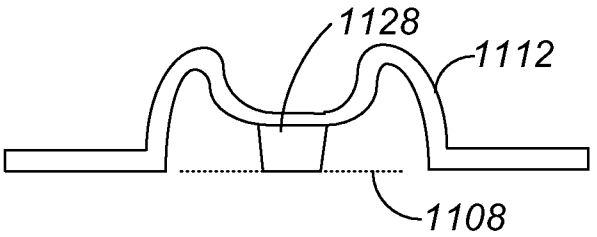

FIG. 10B

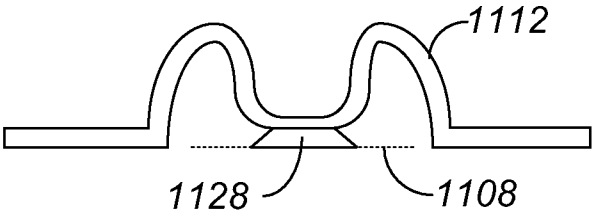

FIG. 10C

CLICKABLE AND TACTILE BUTTONS FOR A TOUCH SURFACE

BACKGROUND OF THE INVENTION

1. Field of the Invention

The present invention relates to portable electronic devices and, more particularly, to a structure which enables touch-sensitive areas of a touchscreen to be activated.

2. Description of the Related Art

Many portable electronic devices include touchscreen displays, or displays which are capable of sensing the location of a touch or contact within a particular area. By way of example, when a person is using an electronic device that includes a touchscreen, he or she may touch a particular area of the touchscreen to cause the electronic device to perform a particular action.

Often, areas of a touchscreen such as buttons identified by the touchscreen may be accidentally activated. That is, a touch-sensitive area of a touchscreen may accidentally be touched. While a user is interacting with a touchscreen using a finger, he or she generally must cause his or her finger to hover above the touchscreen to avoid the accidental activation of a particular feature. Hovering a finger above a touchscreen effectively involves maintaining an air gap between the finger and the touchscreen. In addition, if a user is attempting to activate areas of the touchscreen in series, e.g., if a user is engaged in a series of button pushes, he or she generally must maintain an air gap between his or her finger and the touchscreen between button pushes to enable discrete button pushes to be substantially identified.

A user may also accidentally activate a button by pressing an area of a touchscreen that is between two defined touch areas. For instance, if a user intends to touch one touch area but instead causes another touch area to be touched, he or she may accidentally activate the wrong button.

Although a user may successfully avoid the accidental activation of a touchscreen by maintaining an air gap between his or her finger and the touchscreen, maintaining the air gap may be uncomfortable and inefficient. Hovering a finger over a touchscreen may cause a user's hand and finger to become fatigued. Additionally, if one hand is positioned such that a finger of that hand hovers over a touchscreen of a device, a user is less likely to be able to securely hold the device. The speed at which a user may press touch areas of a touch screen may be limited by the need to maintain an air gap between a finger and the touch areas.

Therefore, what is needed is a method and an apparatus which allows touch areas of a touchscreen to be comfortably and efficiently activated.

SUMMARY OF THE INVENTION

The present invention pertains to button attachment structures which may be attached to a touchscreen of a device to provide physical buttons for use to activate features of the device. The present invention may be implemented in numerous ways, including, but not limited to, as a method, system, device, or apparatus. Example embodiments of the present invention are discussed below.

According to one aspect of the present invention, an apparatus includes a display arrangement and a first button attachment structure. The display arrangement includes a first surface which has a first touch-sensitive area. The first touch-sensitive area is capable of sensing touch. The first button attachment structure includes a first attachment area and a first button actuation area. The first attachment area is

mounted on the first surface such that the first button actuation is aligned at least partially over the first touch-sensitive area. The first button actuation area is arranged to deform when a force is applied to the first button actuation area to engage the first touch-sensitive area.

In accordance with another aspect of the present invention, a portable electronic device includes a touchscreen and a tactile structure. The touchscreen includes a first touch-sensitive area that is arranged to detect a presence of a touch. The first touch-sensitive area in non-tactile. The tactile structure is mounted on the touchscreen such that the tactile structure at least partially overlies the first touch-sensitive area. The tactile structure is configured to provide a physical interface that is used to engage the first touch-sensitive area.

Other aspects and advantages of the invention will become apparent from the following detailed description taken in conjunction with the accompanying drawings which illustrate, by way of example, the principles of the invention.

BRIEF DESCRIPTION OF THE DRAWINGS

The invention will be readily understood by the following detailed description in conjunction with the accompanying drawings, in which:

FIG. **1**A is a diagrammatic representation of a portable electronic device with a touchscreen which includes touch-sensitive areas in accordance with an embodiment of the present invention.

FIG. **1**B is a diagrammatic representation of a portable electronic device, e.g., portable electronic device **100** of FIG. **1**A, which includes button attachment structures positioned over touch sensitive areas in accordance with an embodiment of the present invention.

FIG. **2**A is a diagrammatic representation of an assembly which includes a capacitive sensor and an overlying coverglass in accordance with an embodiment of the present invention.

FIG. **2**B is a diagrammatic representation of an assembly, e.g., assembly **216** of FIG. **2**A, on which a button attachment structure has been positioned in accordance with an embodiment of the present invention.

FIG. **2**C is a diagrammatic representation of an assembly, e.g., assembly **216'** of FIG. **2**A, after a force has been applied to cause a portion of the button attachment structure to buckle in accordance with an embodiment of the present invention.

FIG. **3** is a diagrammatic representation of an assembly that includes a button attachment structure coupled to a coverglass by an adhesive material in accordance with an embodiment of the present invention.

FIG. **4**A is a diagrammatic representation of an assembly which includes a button attachment structure that includes a first relatively high-dielectric puck in accordance with an embodiment of the present invention.

FIG. **4**B is a diagrammatic representation of an assembly, e.g., assembly **416** of FIG. **4**A, after a force has been applied to cause a first relatively high-dielectric puck to contact a coverglass in accordance with an embodiment of the present invention.

FIG. **5**A is a diagrammatic top-view representation of a circularly-shaped button attachment structure in accordance with an embodiment of the present invention.

FIG. **5**B is a diagrammatic cross-sectional side-view representation of a circularly-shaped button attachment structure, e.g., button structure **612** of FIG. **5**A, in accordance with an embodiment of the present invention.

FIG. **6** is a diagrammatic top-view representation of a rectangularly-shaped button attachment structure in accordance with an embodiment of the present invention.

FIG. **7** is a diagrammatic representation of a button attachment structure that includes multiple buttons in accordance with an embodiment of the present invention.

FIG. **8** is a diagrammatic representation of a portable electronic device with a touchscreen on which a button attachment structure that includes multiple buttons is attached in accordance with an embodiment of the present invention.

FIG. **9** is a diagrammatic representation of an assembly which includes a plurality of button attachment structures and a joystick arrangement in accordance with an embodiment of the present invention.

FIG. **10**A is a diagrammatic cross-sectional side-view representation of a complaint or deformable relatively high dielectric structure when a relatively low force is applied in accordance with an embodiment of the present invention.

FIG. **10**B is a diagrammatic cross-sectional side-view representation of a deformable relatively high dielectric structure, e.g., deformable relatively high dielectric structure **1128** of FIG. **10**A, when a medium force is applied in accordance with an embodiment of the present invention.

FIG. **10**C is a diagrammatic cross-sectional side-view representation of a deformable relatively high dielectric structure, e.g., deformable relatively high dielectric structure **1128** of FIG. **10**A, that is suitable for use when a relatively high force is applied in accordance with an embodiment of the present invention.

DETAILED DESCRIPTION OF THE INVENTION

Example embodiments of the present invention are discussed below with reference to the various figures. However, those skilled in the art will readily appreciate that the detailed description given herein with respect to these figures is for explanatory purposes, as the invention extends beyond these embodiments.

Coupling a physical, tactile structure to a touchscreen of an electronic device allows touch areas of the touchscreen, which otherwise essentially have no physical or tactile features, to be associated with a physical structure. That is, a physical, tactile structure may be mounted over a touch area of a touchscreen such that the structure effectively serves to provide a physical, tactile component to the touch area.

In one embodiment, a button attachment structure that is a physical, tactile structure may be provided on a touchscreen surface such that the button attachment structure may be used to activate touch areas of the touchscreen surface. Such a button attachment structure may be removably mounted on, e.g., substantially secured to, a touchscreen surface that is arranged to be activated by touch. The button attachment structure may be mounted on the touchscreen surface such that the button attachment overlies a touch area, or a touch-activatable area. Hence, when a user wishes to touch the touch area of the touchscreen surface, the user may press on, e.g., apply a force to, the button attachment structure to cause the button attachment structure to come into contact with the touch area. When a portion of the button attachment structure contacts the touch area, the touch area is engaged. Engaging the touch area may cause a function associated with the touch area to be substantially activated.

A button attachment structure may be configured such that a top surface, or a button actuation area, of the button attachment structure is positioned at a distance above a touchscreen. The distance enables an air gap to be maintained when the button actuation area is in an unactivated state. Hence, a touch area of the touchscreen, i.e., a touch sensitive area that is arranged to be activated by the button actuation area when a force is applied to the button actuation area, is effectively protected from being accidentally activated.

If a user does not apply a significant force to the button attachment structure mounted over a touch area on a touchscreen, the button actuation area of the structure may remain substantially unbuckled. As such, a user may rest his or her finger on the button attachment structure, e.g., between button pushes, substantially without accidentally causing a touch area of the touchscreen to be activated.

The use of button attachment structures mounted over touch areas on a touchscreen reduces the likelihood that a touch area may be accidentally touched, e.g., activated. The physical, tactile characteristics of the button attachment structures may effectively serve as physical and tactile guides which increase the ability for a user to accurately locate and touch, i.e., touch through the use of a button attachment structure, desired touch areas. That is, button attachment structures effectively provide a physical dimension to desired touch areas. In addition, button attachment structures provide tactile feedback which indicates that touch areas have been engages, or tactile feedback for button presses.

Referring initially to FIG. **1**A, a portable electronic device that includes a touchscreen with touch areas will be described. A portable electronic device **100** includes a touchscreen **104** with touch areas **108***a*, **108***b*. In the described embodiment, portable electronic device **100** is a capacitive touch device. Portable electronic device **100** may be a device including, but not limited to including, a portable media player, a cellular telephone, a portable electronic gaming device, and/or a portable computing device, e.g., a personal digital assistant (PDA). In one embodiment, the portable electronic device may be an iPod™ or an iPhone™ available commercially from Apple Inc. of Cupertino, Calif.

Touch areas **108***a*, **108***b* are generally points of contact that enable a user to effectively interact with that which is displayed on touchscreen **104**, e.g., icons and/or applications. When a user wishes to activate one of touch areas **108***a*, **108***b*, the user may touch the appropriate touch area **108***a*, **108***b*. Touching touch areas **108***a*, **108***b* effectively causes an input to be received by portable electronic device **100**. Touch areas **108***a*, **108***b* are generally arranged to detect the presence of a touch, and may substantially cause an input to be received and processed by portable electronic device **100** when the presence of a touch is detected or otherwise identified.

Touch areas **108***a*, **108***b* generally do not include a physical component or a tactile component. As such, a user generally visually identifies locations of touch areas **108***a*, **108***b*, and then touches, e.g., presses on, touch areas **108***a*, **108***b* as desired. In order to associate a physical, tactile component with touch areas **108***a*, **108***b*, button attachment structures may be positioned substantially over touch areas **108***a*, **108***b*. FIG. **1**B is a diagrammatic representation of a portable electronic device **100** with button attachment structures positioned over touch areas in accordance with an embodiment of the present invention. A button attachment structure **112***a* is coupled to touchscreen **104** such that at least a portion of button attachment structure **112***a* is positioned over touch area **108***a*. Similarly, a button attachment structure **112***b* is coupled to touchscreen **104** such that at least a portion of button attachment structure **112***b* is positioned over touch area **108***b*.

Button attachment structures **112***a*, **112***b* effectively provide a physical, tactile component to touch areas **108***a*, **108***b*, respectively. Button attachment structures **112***a*, **112***b* are arranged such that when button attachment structures **112***a*,

112*b* are pressed, touch areas **108***a*, **108***b*, respectively, may be contacted. Upon contact, touch areas **108***a*, **108***b* are effectively engaged or activated.

The shape of each button attachment structure **112***a*, **112***b* may vary. Typically, button attachment structures **112***a*, **112***b* may have a dome-like shape, as will be discussed below. It should be understood that although button attachment structures **112***a*, **112***b* are shown as having a substantially rectangularly-shaped footprints, the shape of the footprints of button attachment structures **112***a*, **112***b* may vary.

In general, button attachment structures **112***a*, **112***b* are formed from a flexible material. The flexible material is typically stiff enough to allow button attachment structures **112***a*, **112***b* to maintain their shapes, and flexible enough to allow button attachment structures to be pressed to engage touch areas **108***a*, **108***b*, respectively. Suitable materials from which button attachment structures **112***a*, **112***b* may be formed may include materials such as silicone rubber or flexible plastics. To enable touch areas **108***a*, **108***b* to be viewed when button attachment structures **112***a*, **112***b* are positioned over touch areas **108***a*, **108***b*, button attachment structures **112***a*, **112***b* may be formed from a substantially transparent material. It should be appreciated, however, that button attachment structures **112***a*, **112***b* are not limited to being formed from a substantially transparent material. By way of example, button attachment structures **112***a*, **112***b* may be formed from a material which is colored or printed to effectively look like touch areas **108***a*, **108***b*.

Button attachment structures **112***a*, **112***b* may be formed such that suction forces allow button attachment structures **112***a*, **112***b* to be attached to touchscreen **104**. Button attachment structures **112***a*, **112** may also be formed such that static allows button attachment structures **112***a*, **112***b* to be attached to touchscreen **104**. Alternatively, button attachment structures **112***a*, **112***b* may be attached to touchscreen **104** using an adhesive, as for example a fugitive adhesive that enables a temporary bond to be formed between button attachment structures **112***a*, **112***b* and touchscreen **104**.

With reference to FIG. **2**A, one suitable touchscreen assembly on which a button attachment structure may be attached will be described in accordance with an embodiment of the present invention. A touchscreen assembly **216** includes a capacitive sensor **218** over which a coverglass **204** is positioned. Coverglass **204**, which may be an insulating glass layer or a plastic layer, effectively protects capacitive sensor **218**. When a top surface of coverglass **204** is touched over a touch area **208**, capacitive sensor **204** may sense the touch.

FIG. **2**B is a diagrammatic cross-sectional side-view representation of touchscreen assembly **216'** after a button attachment structure has been positioned to at least partially overlie touch area **208** in accordance with an embodiment of the present invention. A button attachment structure **212**, which has an approximately dome-like shape, is attached to a top surface of coverglass **204** to at least partially overlie touch area **208**. When button attachment structure **212** overlies touch area **208**, at least one surface of button attachment structure **212** is at a distance from a top surface of touch area **208**. In the described embodiment, button attachment structure **212** may be similar to a suction cup, i.e., button attachment structure **212** may be substantially attached to coverglass **204** using suction forces.

Button attachment structure **212** is arranged to provide click-like tactile feedback to a user when button attachment structure **212** buckles with the application of force and "unbuckles" or returns to a rest state when the force is removed. Specifically, when a user clicks on or presses on button attachment structure **212**, button attachment structure **212** buckles and provides tactile feedback to the user. FIG. **2**C is a diagrammatic representation of touchscreen assembly **216'** after a force has been applied to cause a portion of button attachment structure **212** to buckle in accordance with an embodiment of the present invention. A force **220**, which may be provided by the finger of a user, is applied to button attachment structure **212**. As shown, force **220** is sufficient to cause button attachment structure **212** to buckle or, more generally, to deform when button attachment structure **212** is clicked or pressed. When button attachment structure **220** deforms, touch area **208** is engaged or activated. In addition, click-like tactile feedback is effectively provided by button attachment structure **212** to a user, e.g., through the finger of a user, to indicate that touch area **208** has been activated.

Button attachment structure **212** may be in substantially direct contact with coverglass **204** when button attachment structure **212** is mounted on or otherwise held against coverglass **204** by suction or static forces. In general, a button attachment structure may also effectively be held in contact with a coverglass using an adhesive material such as a fugitive adhesive. FIG. **3** is a diagrammatic representation of a touchscreen assembly that includes a button attachment structure coupled to a coverglass by an adhesive material in accordance with an embodiment of the present invention. A touchscreen assembly **316** includes a capacitive sensor **318**, a coverglass **304**, and a button attachment structure **312**. Button attachment structure **312** is mounted to a top surface of coverglass **304** using an adhesive material **324**.

In one embodiment, to improve the performance of a device with a touchscreen with which a button attachment structure is used, a relatively high dielectric component may be associated with the button attachment structure. Such a high dielectric component may be coupled to an internal surface of a button attachment structure. FIG. **4**A is a diagrammatic representation of an assembly which includes a button attachment structure that includes a relatively high-dielectric component, e.g., puck, in accordance with an embodiment of the present invention. A button attachment structure **412** associated with a touchscreen assembly **416** is mounted to a coverglass **404** which overlies a capacitive sensor **418**. Although an adhesive material **424** is shown as being used to couple button attachment structure **412** to coverglass **404**, it should be appreciated that the use of adhesive material **424** is substantially optional.

A relatively high dielectric puck **428** is coupled to an internal surface of button attachment structure **412** such that puck **428** moves with button attachment structure **412** when button attachment structure **412** buckles. Puck **428** may be formed from a material such as metal (e.g., copper, titanium dioxide, etc.) or conductive rubber (e.g., silver-doped or graphite-doped silicone), as a few examples. It should be appreciated that the shape and size of puck **428** may vary depending upon factors which may include, but are not limited to including, the size of a touch area **408**, the size of button attachment structure **412**, and/or the type of material from which puck **428** is formed.

When a force **420** is applied to button attachment structure **412**, as shown in FIG. **4**B, button attachment structure **412** buckles. When button attachment structure **412** buckles, puck **428** may contact a top surface over coverglass **404** or, more specifically, touch area **408**. Hence, touch area **408** is engaged or activated by puck **428**.

As previously mentioned, the size and shape of a relatively high dielectric structure which may be used with a button attachment structure may vary. In addition, the touch sensing

capabilities of a touchscreen assembly may be provided by sensing devices other than a capacitive sensor.

A button attachment structure may generally be of any suitable size and shape. By way of example, a button attachment structure may have a round, approximately circular shape. With reference to FIGS. **5**A and **5**B, a circularly-shaped button attachment structure will be described in accordance with an embodiment of the present invention. A button attachment structure **612** includes an attachment area **632***a* and a button actuation area **632***b*. Attachment area **632***a* is arranged to be mounted on a touch screen (not shown) either directly or indirectly, e.g., through use of an adhesive material. Button actuation area **632***b*, which may be a dome-shaped area, is arranged to be aligned at least partially over a touch sensitive area (not shown). Button actuation area **632***b* is also arranged to substantially buckle when a force is applied.

In the described embodiment, a relatively high dielectric structure **628** is coupled to an internal surface of button actuation area **632***b*. Structure **628** may be coupled to button actuation area **632***b* using an adhesive or the like. While structure **628** is shown as being of an approximately cylindrical shape, it should be appreciated that structure **628** may be of any suitable shape. Examples of other suitable shapes will be described below with respect to FIGS. **10**A-C.

Rather than being of an approximately circular shape, a button attachment structure may be of an approximately polygonal, e.g., rectangular, shape. FIG. **6** is a diagrammatic top-view representation of a rectangularly-shaped button attachment structure in accordance with an embodiment of the present invention. A button attachment structure **712** that is substantially rectangularly shaped includes an attachment area **732***a* and a button actuation area **732***b*. A relatively high dielectric structure **728** is coupled to an internal surface of button actuation area **732***b*, as shown. It should be appreciated that structure **728** is optional, i.e., that button attachment structure **712** may be arranged to be used without structure **728**.

More than one button attachment structure may be positioned on a surface of a touchscreen. While a separate button attachment structure may be used for each touch area of a touch screen, a single button attachment structure which includes multiple button actuator areas may instead be positioned on the surface of a touchscreen to accommodate multiple touch areas. FIG. **7** is a diagrammatic representation of a button attachment structure that includes multiple buttons, or multiple button actuation areas, in accordance with an embodiment of the present invention. A button attachment structure **836** includes an attachment portion **840** which is configured to be attached to a surface of a touchscreen (not shown). Attachment portion **840** is effectively coupled to multiple button actuation areas **812***a-e*. Button actuation areas **812***a-e* are arranged to substantially overlie touch areas associated with a touchscreen (not shown) when attachment portion **840** is attached to the touchscreen. In one embodiment, button actuation areas **812***a-e* have substantially dome-like shapes.

FIG. **8** is a diagrammatic representation of a portable electronic device with a touchscreen on which a button attachment structure that includes multiple buttons is attached in accordance with an embodiment of the present invention. A portable electronic device **900** includes a touchscreen **904** on which a button attachment structure **936** may be positioned. Button attachment structure **936** is typically positioned on touchscreen **904** such that at least one of buttons **912** overlies a touch area (not shown) of touchscreen **904**. Hence, when a button **912** is pressed such that a touch area (not shown) underlying that button **912** is effectively contacted, the touch area is engaged.

Multiple button attachment structures, or a single button attachment structure which includes more than one button actuation area, may be used with a joystick arrangement to provide input to a portable electronic device. FIG. **9** is a diagrammatic representation of an assembly which includes a plurality of button attachment structures and a joystick arrangement in accordance with an embodiment of the present invention. An assembly **1016** includes a capacitive sensor **1018** over which a coverglass is positioned. A plurality of button attachment structures **1012** are coupled to a top surface of coverglass **1004**. A joystick actuator **1044**, which may be formed from a material such as rubber or plastic, includes a shaft portion **1056** and contact points **1048**. Contact points **1048** are arranged to contact button attachment structures **1012** such that contact points **1048** may cause portions of button attachment structures **1012** to buckle and, hence, activate touch areas (not shown) which underlie button attachment structures **1012**.

Joystick actuator **1044** also includes a pivot point **1052** and an attachment portion **1054**. Attachment portion **1054** is arranged to effectively secure joystick actuator **1044** to a top surface of coverglass **1004** such that when shaft portion **1056** pivots with respect to pivot point **1052**, e.g., to apply a force on at least one button attachment structure **1012** through at least one contact point **1048**, joystick actuator **1044** remains secured against coverglass **1004**.

As discussed above, a relatively high dielectric structure which may be used with a button attachment structure may be of any suitable size or shape. In one embodiment, a relatively high dielectric structure may be formed from a compliant material that effectively molds itself depending upon the amount of force applied to the button attachment structure. Exemplary materials for the relatively high dielectric structures can, for example, include titanium dioxide, silver or graphite doped silicone, etc. That is, a relatively high dielectric structure may be used to provide force sensitivity through having a substantially variable contact area. The size of the area of a relatively high dielectric structure that substantially contacts a touch area of a touchscreen may vary with the amount of force applied to the structure. FIG. **10**A is a diagrammatic cross-sectional side-view representation of a complaint or deformable relatively high dielectric structure when a relatively low force is applied in accordance with an embodiment of the present invention. A deformable dielectric structure **1128** is coupled to a surface of a button attachment structure **1112**. As shown, when a relatively low amount of force is applied to button attachment structure **1112**, e.g., when structure **1128** does not contact a surface **1108** of a touchscreen, structure **1128** is in a substantially default or rest state.

FIG. **10**B is a diagrammatic cross-sectional side-view representation structure **1128** when a medium amount of force is applied in accordance with an embodiment of the present invention. When a medium amount of force is applied to button attachment structure **1112** such that button attachment structure **1112** buckles and structure **1128** is effectively forced against surface **1108**, structure **1128** may deform such that an area of structure **1128** that contacts surface **1108** is larger than it was when a relatively low amount of force was applied to button attachment structure **1112**.

Once a surface of structure **1128** contacts surface **1108**, as the amount of force applied to button attachment structure **1112** increases, the area of structure **1128** which contacts surface **1108** also increases. As shown in FIG. **10**C, when a

relatively high amount of force is applied to button attachment structure **1112**, structure **1128** deforms such that a larger area of surface **1108** is touched by structure **1128** than was the case when a medium amount of force was applied.

Although only a few embodiments of the present invention have been described, it should be understood that the present invention may be embodied in many other specific forms without departing from the spirit or the scope of the present invention. By way of example, while the use of button attachment structures has been described as being suitable for use on touchscreens associated with portable electronic devices, button attachment structures are not limited to being used on touchscreens associated with portable electronic devices. In general, button attachment structures may be used with any suitable display screen. Suitable display screens include, but are not limited to including, display screens associated with computing devices, terminals, automated teller machines (ATMs), point-of-sale payment devices, and the like.

When a touchscreen is capacitive, engaging or activating a touch area of the touchscreen may occur substantially without actual physical contact being made with the touch area. A capacitive touchscreen may sense when an object, e.g., a finger or a surface of a button attachment structure, is in relatively close proximity to the touch area. When the object is sensed, the touch area may be engaged or activated.

While a plurality of button attachment structures has been described as being used with a joystick actuator, a single button attachment structure that includes a plurality of button actuation areas may instead be used with a joystick actuator. Further, the number of button attachment structures and the number of button actuation areas associated with a button attachment structure may vary widely.

The size and the shape of button attachment structures may vary widely. A button attachment structure may be sized and shaped to accommodate the particular application for which the button attachment structure is to be used.

While a button attachment structure has generally been described as being removably attached to a display screen, it should be appreciated that a button attachment structure may instead be substantially irremovably attached to a display screen. That is, a button attachment structure may be attached to a display screen such that it is effectively permanently attached to the display screen or attached to the display screen such that the removal of the button attachment structure essentially renders the button attachment structure unusable.

A touchscreen may include a coverglass and a capacitive sensor, as previously described. A touchscreen may also include a resistive touch sensor. In lieu of a capacitive sensor or a resistive touch sensor, however, a touchscreen may include other types of sensors or use other types of technologies to effectively sense touch. For instance, a touchscreen may include infrared sensors, piezoelectric sensors, or strain gauge sensors. A touchscreen may also utilize dispersive signal technologies and surface acoustic wave technologies. In general, button attachment structures may be used with a variety of different touchscreens, and are not limited to being used with touchscreens which utilize capacitive sensing technologies.

Button attachment structures may be formed using substantially any suitable methods or processes. For example, button attachment structures may be formed using a compression molding process.

The operations associated with the various methods of the present invention may vary widely. By way of example, steps may be added, removed, altered, combined, and reordered without departing from the spirit or the scope of the present invention.

The many features and advantages of the present invention are apparent from the written description. Further, since numerous modifications and changes will readily occur to those skilled in the art, the invention should not be limited to the exact construction and operation as illustrated and described. Hence, all suitable modifications and equivalents may be resorted to as falling within the scope of the invention.

What is claimed is:

1. An apparatus comprising:

a display arrangement including a touch sensor and a coverglass, the coverglass being arranged to overlie the touch sensor, the coverglass including a first surface, the first surface being an exposed outer surface of the apparatus and including a first touch-sensitive area, the first touch-sensitive area being arranged to sense touch;

a first button attachment structure, the first button attachment structure including a first attachment area and a first button actuation area, the first attachment area being mounted on the first surface, the first button actuation area being aligned at least partially over the first touch-sensitive area; and

a compliant dielectric structure coupled to a surface of the first button actuation area, wherein:

a first area of the dielectric structure engages the first touch sensitive area in response to a first amount of force applied to the first button actuation area;

a second area of the dielectric structure engages the first touch sensitive area in response to a second amount of force applied to the first button actuation area;

the first touch sensitive area is arranged to activate a function associated with the apparatus when engaged by the dielectric structure; and

the first button actuation area is arranged to deform when a force is applied to the first button actuation area.

2. The apparatus of claim **1** wherein the first button attachment structure is mounted on the display arrangement using a suction force.

3. The apparatus of claim **1** wherein the first button attachment structure is mounted on the display arrangement using a static force.

4. The apparatus of claim **1** wherein the first button attachment structure is mounted on the display arrangement using an adhesive material.

5. The apparatus of claim **1** wherein the first button attachment structure is formed from a material selected from the group including a silicone rubber and a flexible plastic.

6. The apparatus of claim **1** wherein the first surface further includes a second touch-sensitive area and the first button attachment structure further includes a second button actuation area, the second button actuation area being aligned at least partially over the second touch-sensitive area.

7. The apparatus of claim **1** wherein the display arrangement is a touchscreen arrangement.

8. The apparatus of claim **7** wherein the touchscreen arrangement being configured to visually present touch area locations.

9. The apparatus of claim **7** wherein the touchscreen arrangement includes a resistive touch sensor.

10. The apparatus of claim **1** wherein the first button actuation area is arranged to engage the first touch-sensitive area by directly contacting the first touch-sensitive area.

11. The apparatus of claim **1** wherein the apparatus is one selected from the group including a cellular telephone, a media player, a computing device, a game player, and a personal digital assistant.

12. The apparatus of claim **1** wherein the first attachment structure has an approximately dome-like shape.

13. A portable electronic device comprising: a touch sensor; a touchscreen being arranged to overlie the touch sensor, the touchscreen including an exposed outer surface of the portable electronic device the touchscreen having a first touch-sensitive area, wherein the first touch-sensitive area is arranged to detect a presence of a touch, wherein the first touch-sensitive area is non-tactile; and a tactile structure having an outer surface and an inner surface, the tactile structure being mounted on the touchscreen such that the tactile structure at least partially overlies the first touch-sensitive area, wherein the tactile structure is configured to provide a physical interface that is arranged to engage the first touch-sensitive area; and a dielectric structure formed from a compliant material coupled to the inner surface of the tactile structure; wherein the tactile structure and dielectric structure are arranged to move between a first position and a second position, the tactile structure and dielectric structure arranged to deform to the second position when a force is applied to the tactile structure, wherein a first area of the dielectric structure engages the first touch-sensitive area in response to a first amount of force applied to a first portion of the outer surface of the tactile structure and a second area of the dielectric structure engages the first touch-sensitive area in response to a second amount of force applied to the first portion of the outer surface of the tactile structure, and wherein subsequent to the applied force, the tactile structure and dielectric structure return to the first position when the applied force is removed.

14. The portable electronic device of claim **13** wherein the tactile structure includes a dome area, the dome area being arranged to overlie the first touch-sensitive area.

15. The portable electronic device of claim **14** wherein the dome area is arranged to buckle when a force is applied to the dome area, and wherein the dome area engages the first touch-sensitive area when the force is applied to the dome area.

16. The portable electronic device of claim **14** wherein the dielectric structure being mounted to a surface of the dome area.

17. The portable electronic device of claim **16** wherein the dome area is arranged to buckle when a force is applied to the dome area, and wherein the dielectric structure engages the first touch-sensitive area when the force is applied to the dome area.

18. The portable electronic device of claim **13** wherein the tactile structure is mounted on the touchscreen using a suction force.

19. The portable electronic device of claim **13** wherein the tactile structure is mounted on the touchscreen using a static force.

20. The portable electronic device of claim **13** wherein the tactile structure is mounted on the touchscreen using an adhesive material.

21. The portable electronic device of claim **13** wherein the tactile structure is formed from one selected from the group including silicone rubber and flexible plastic.

* * * * *