US 20060097991A1

(19) United States

(12) Patent Application Publication

(10) Pub. No.: US 2006/0097991 A1

(43) Pub. Date: May 11, 2006

Hotelling et al.

(54) MULTIPOINT TOUCHSCREEN

(75) Inventors: **Steve Hotelling**, San Jose, CA (US); **Joshua A. Strickon**, San Jose, CA (US); **Brian Q. Huppi**, San Francisco, CA (US)

Correspondence Address:
WONG, CABELLO, LUTSCH, RUTHERFORD & BRUCCULERI, P.C.
20333 SH 249
SUITE 600
HOUSTON, TX 77070 (US)

(73) Assignee: **Apple Computer, Inc.**

(21) Appl. No.: **10/840,862**

(22) Filed: **May 6, 2004**

Publication Classification

(51) **Int. Cl.**
G09G 5/00 (2006.01)

(52) **U.S. Cl.** **345/173**

(57) **ABSTRACT**

A touch panel having a transparent capacitive sensing medium configured to detect multiple touches or near touches that occur at the same time and at distinct locations in the plane of the touch panel and to produce distinct signals representative of the location of the touches on the plane of the touch panel for each of the multiple touches is disclosed.

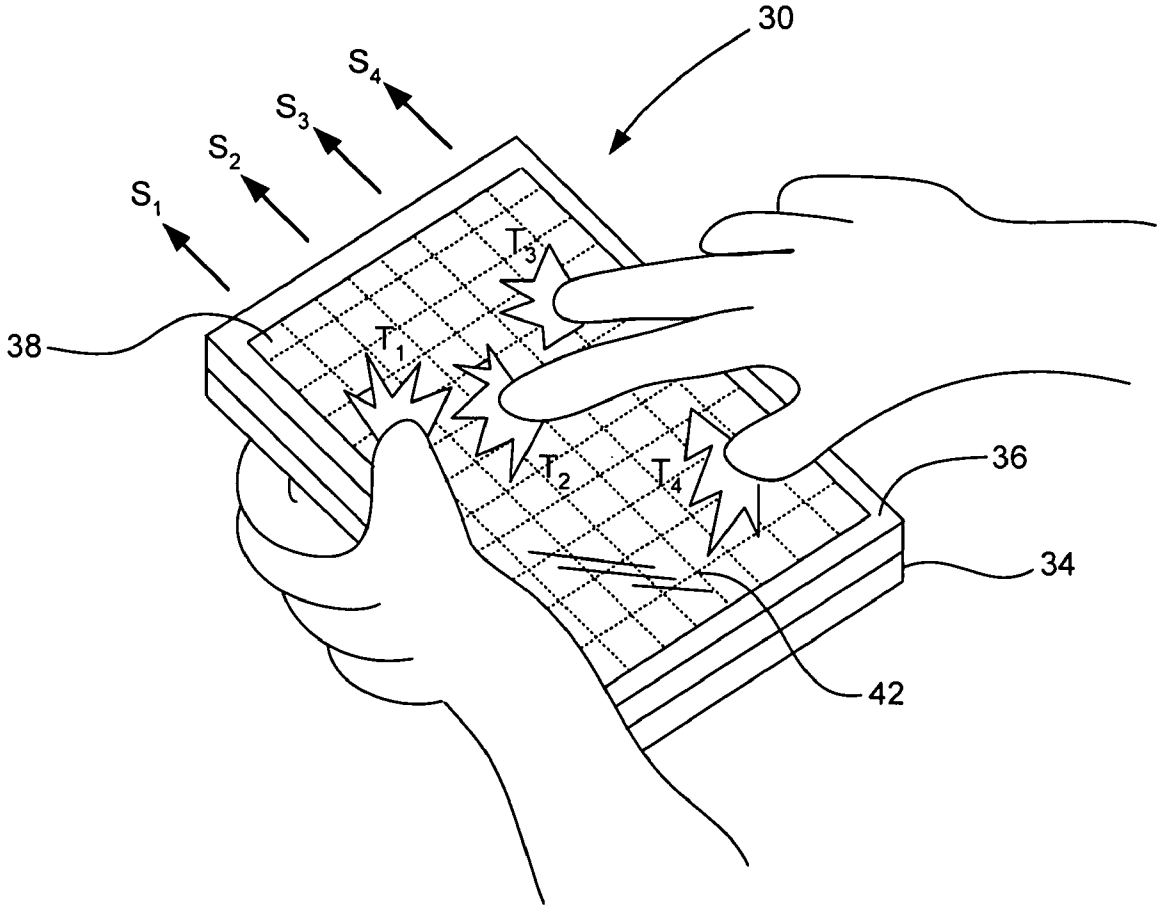

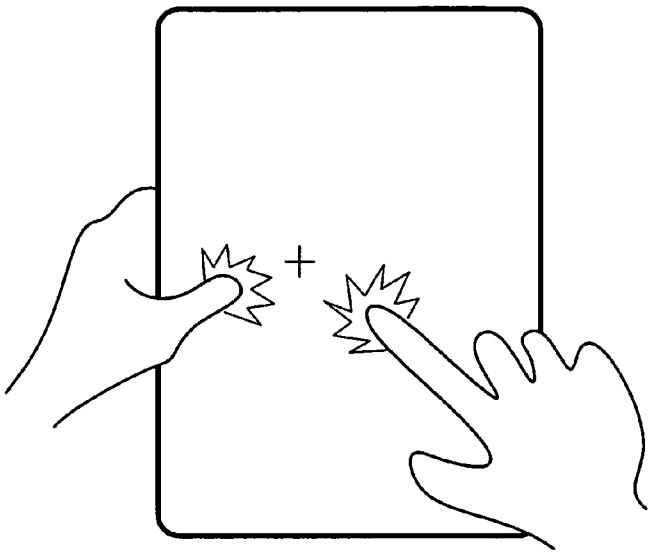

FIG. 1A

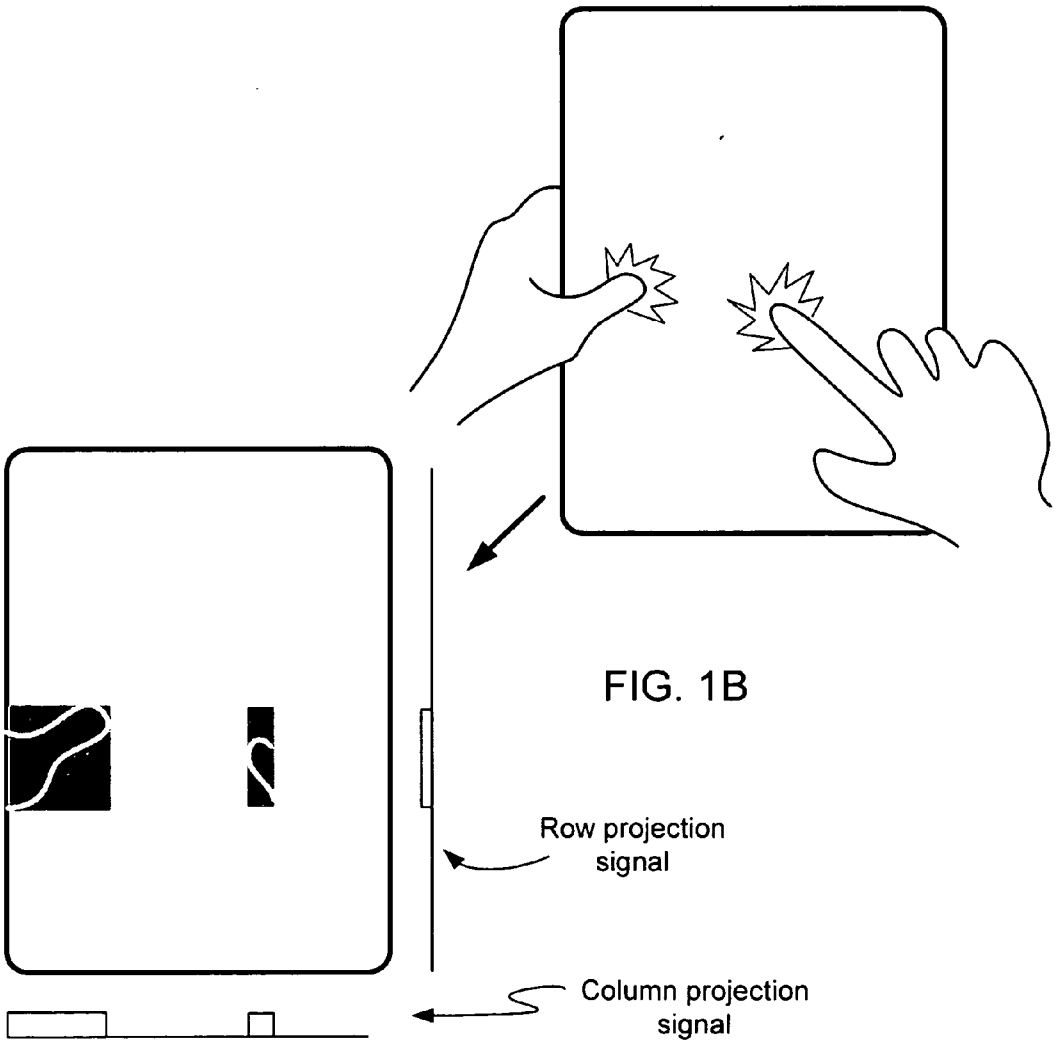

FIG. 1B

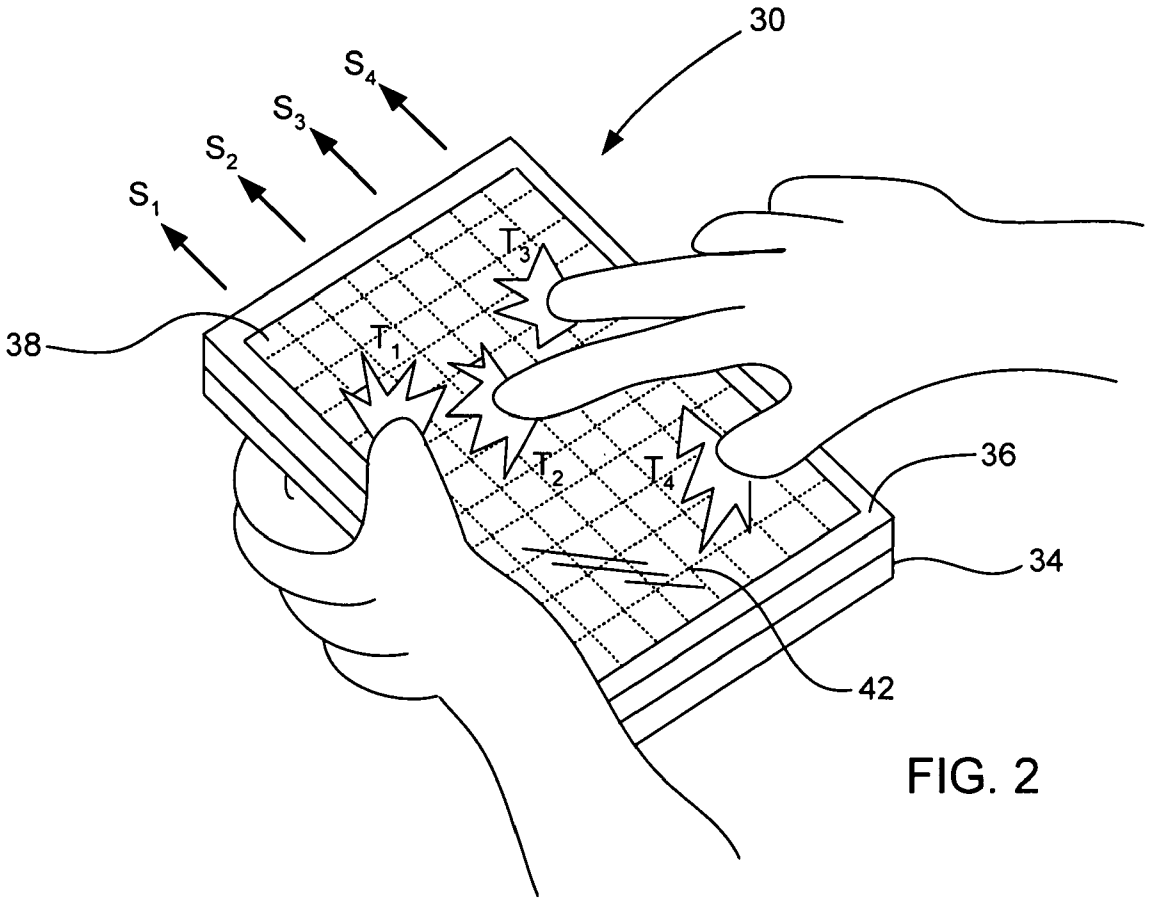

FIG. 2

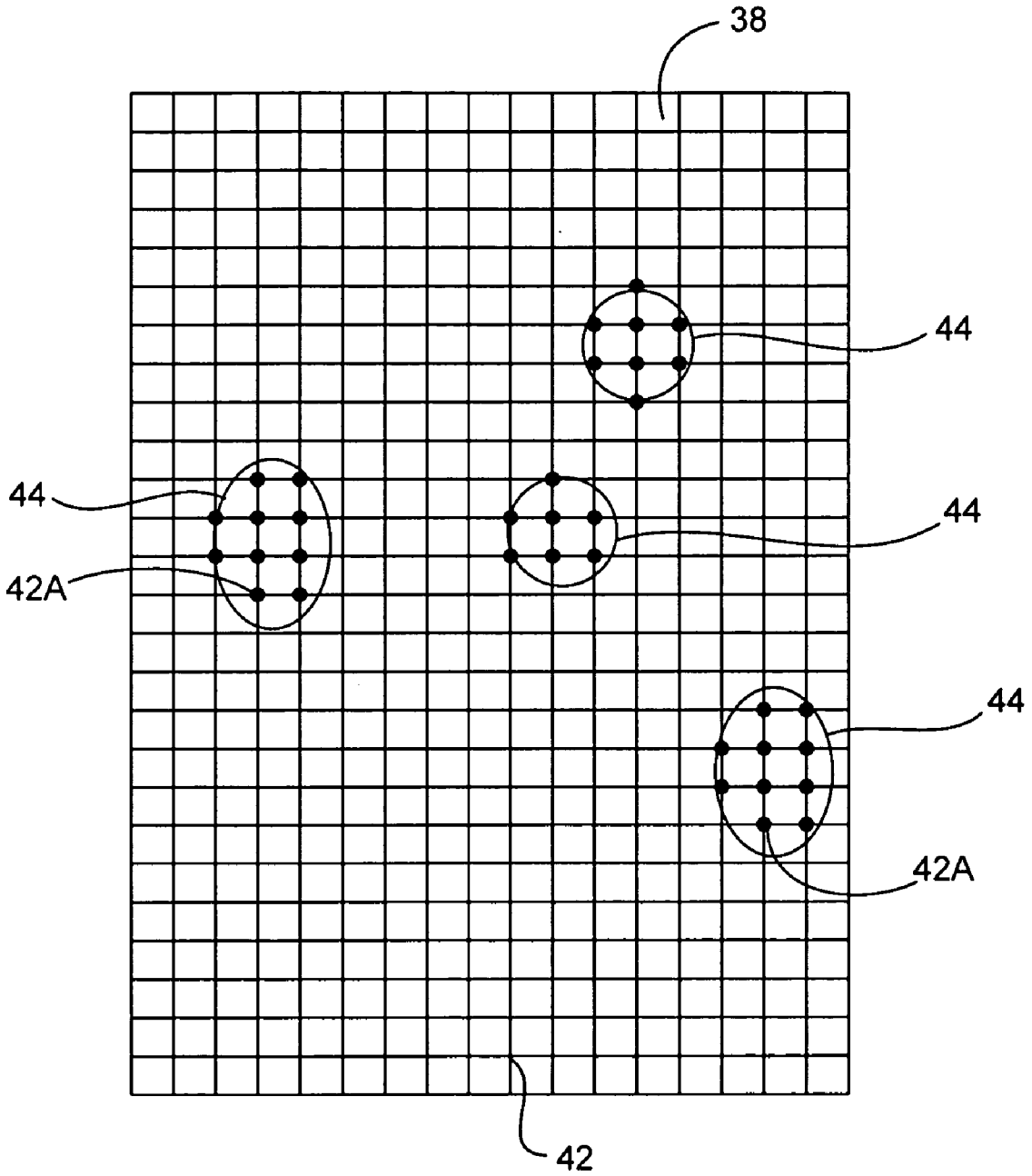

FIG. 3

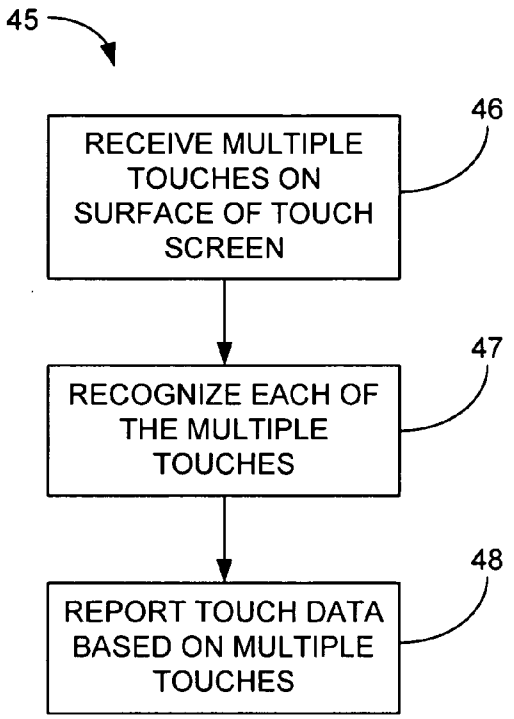
45
RECEIVE MULTIPLE TOUCHES ON SURFACE OF TOUCH SCREEN
46
RECOGNIZE EACH OF THE MULTIPLE TOUCHES
47
REPORT TOUCH DATA BASED ON MULTIPLE TOUCHES
48

FIG. 4

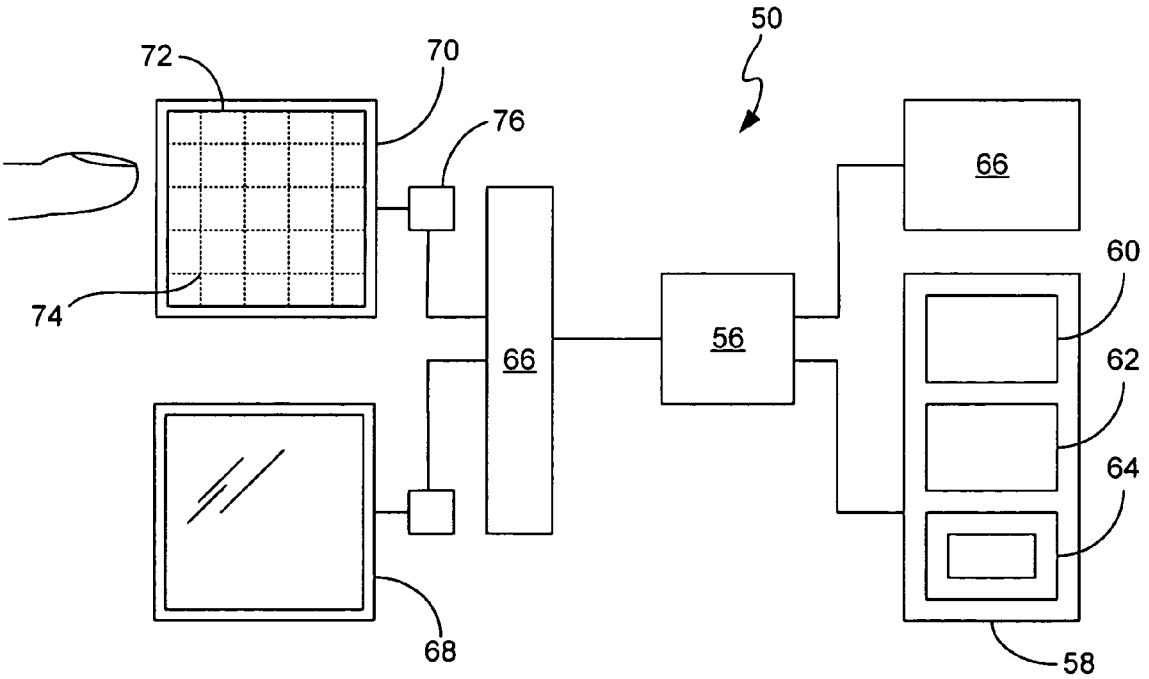
50
72
70
76
74
66
56
66
60
62
64
68
58

FIG. 5

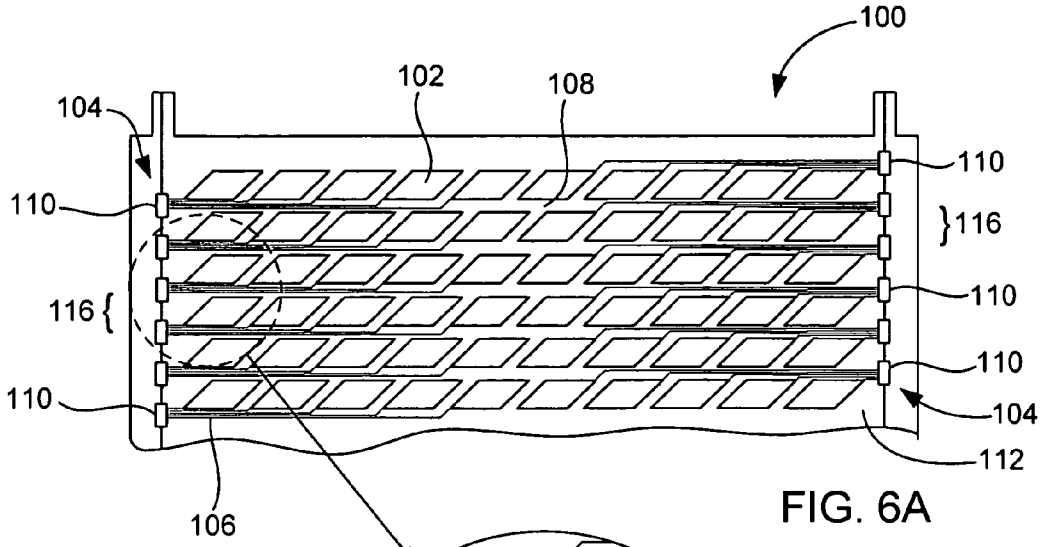

FIG. 6A

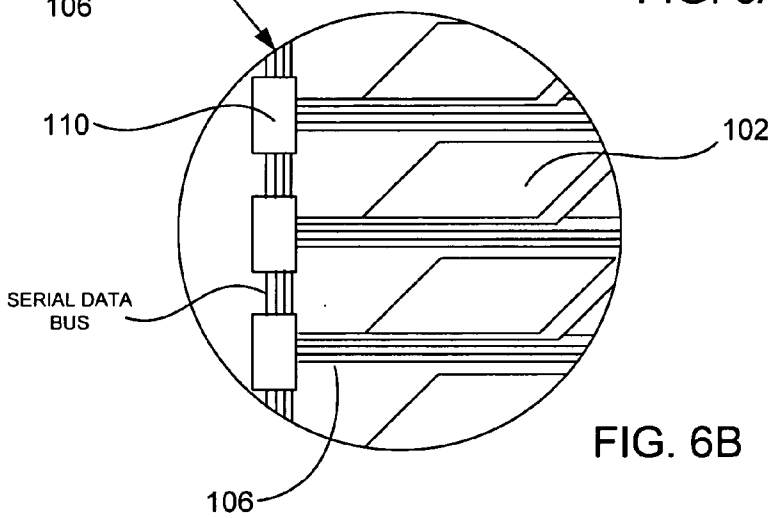

FIG. 6B

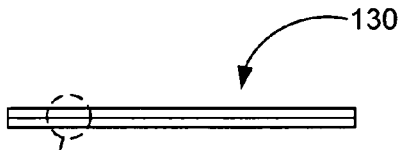

FIG. 8A

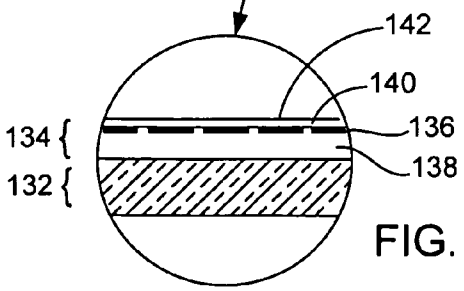

FIG. 8B

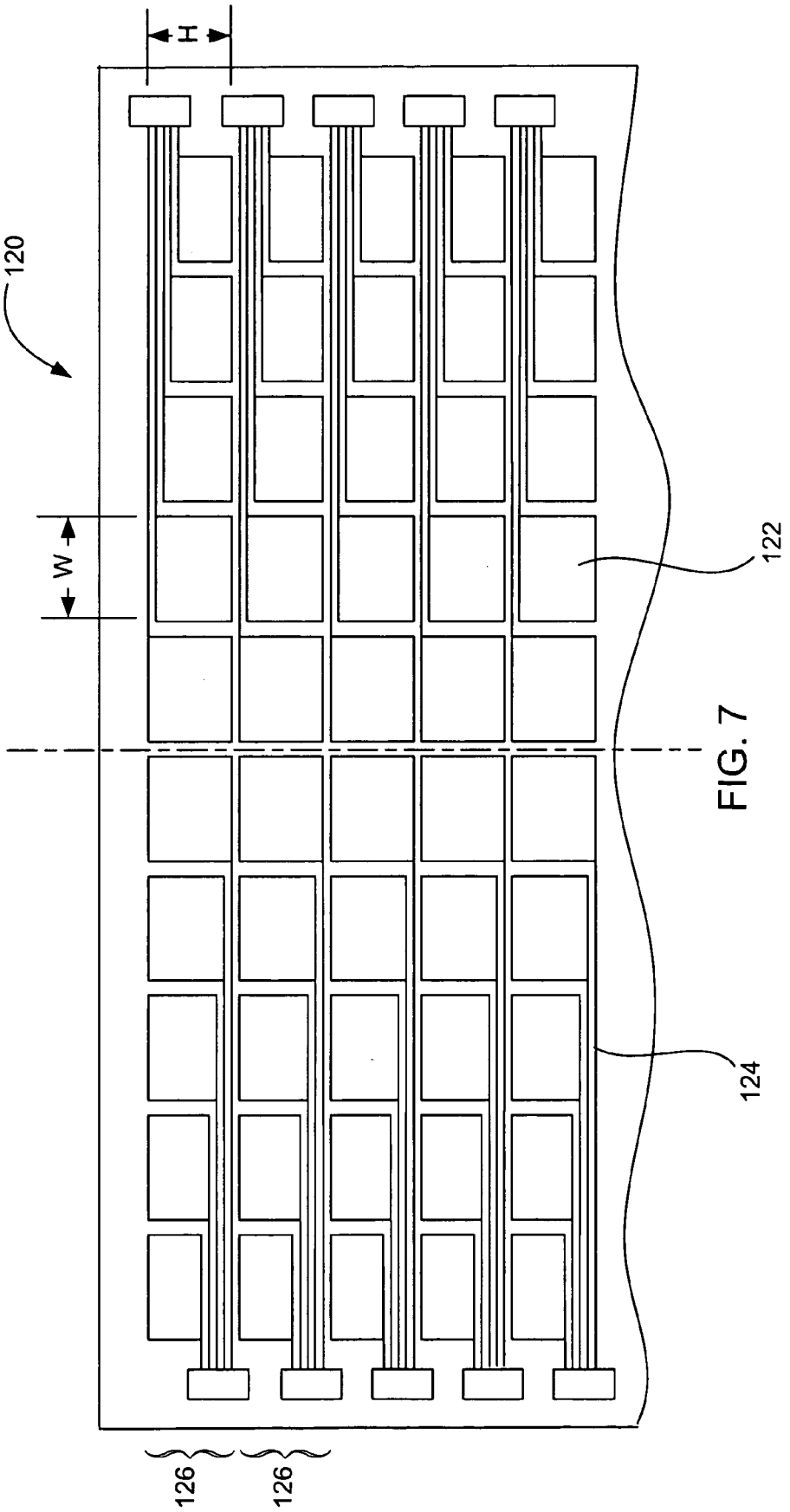

FIG. 7

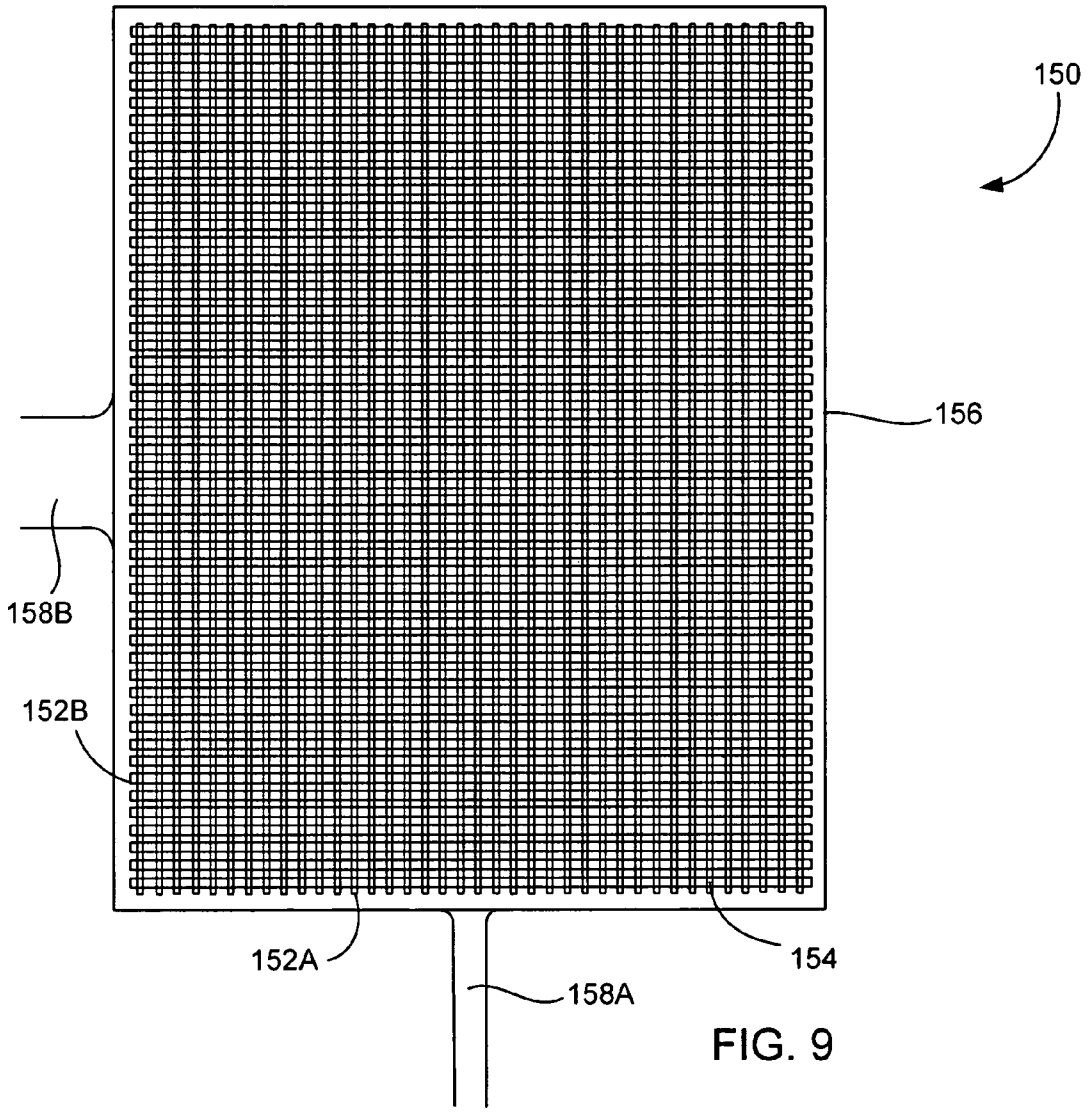
150
156
158B
152B
152A
154
158A

FIG. 9

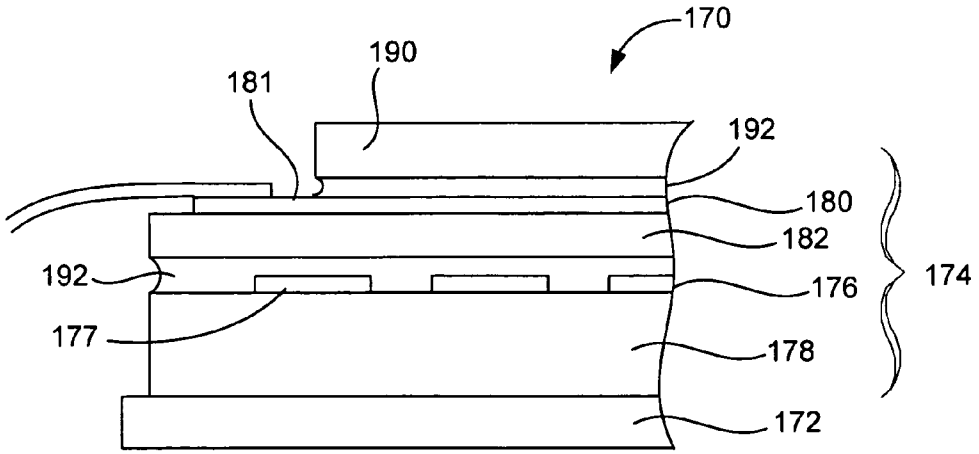
170
190
181
192
180
182
192
176
174
177
178
172

FIG. 10

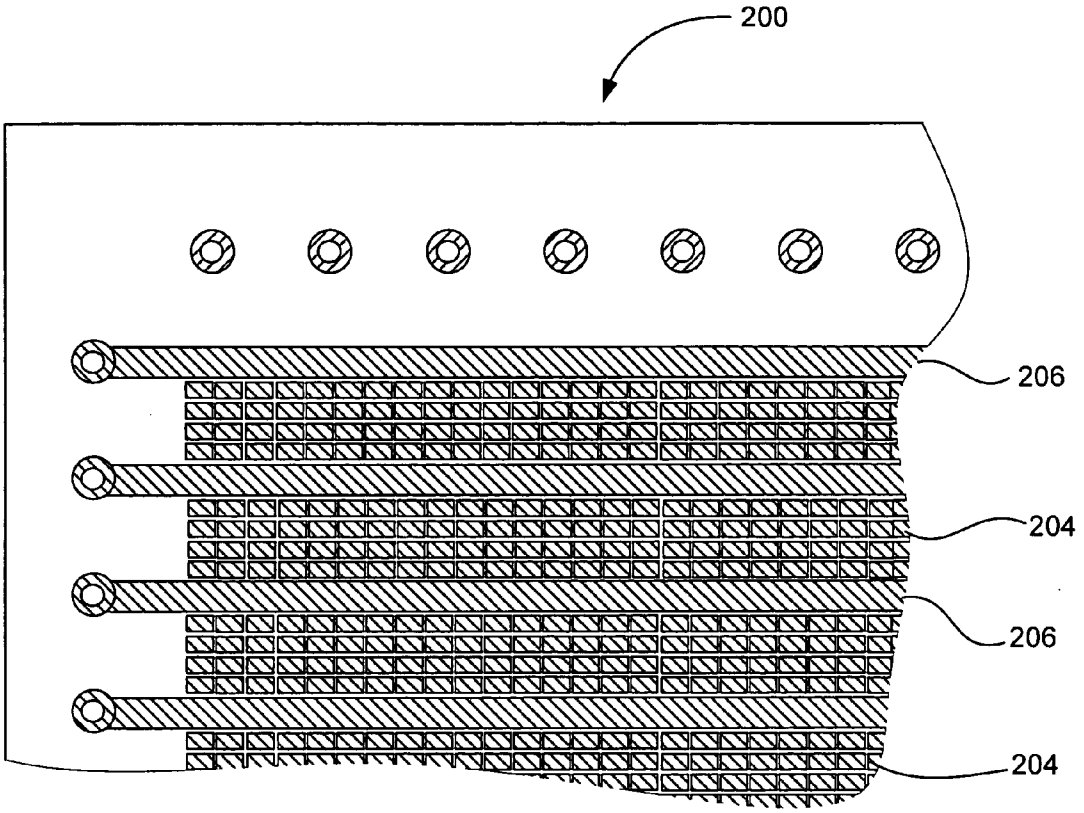

FIG. 11A

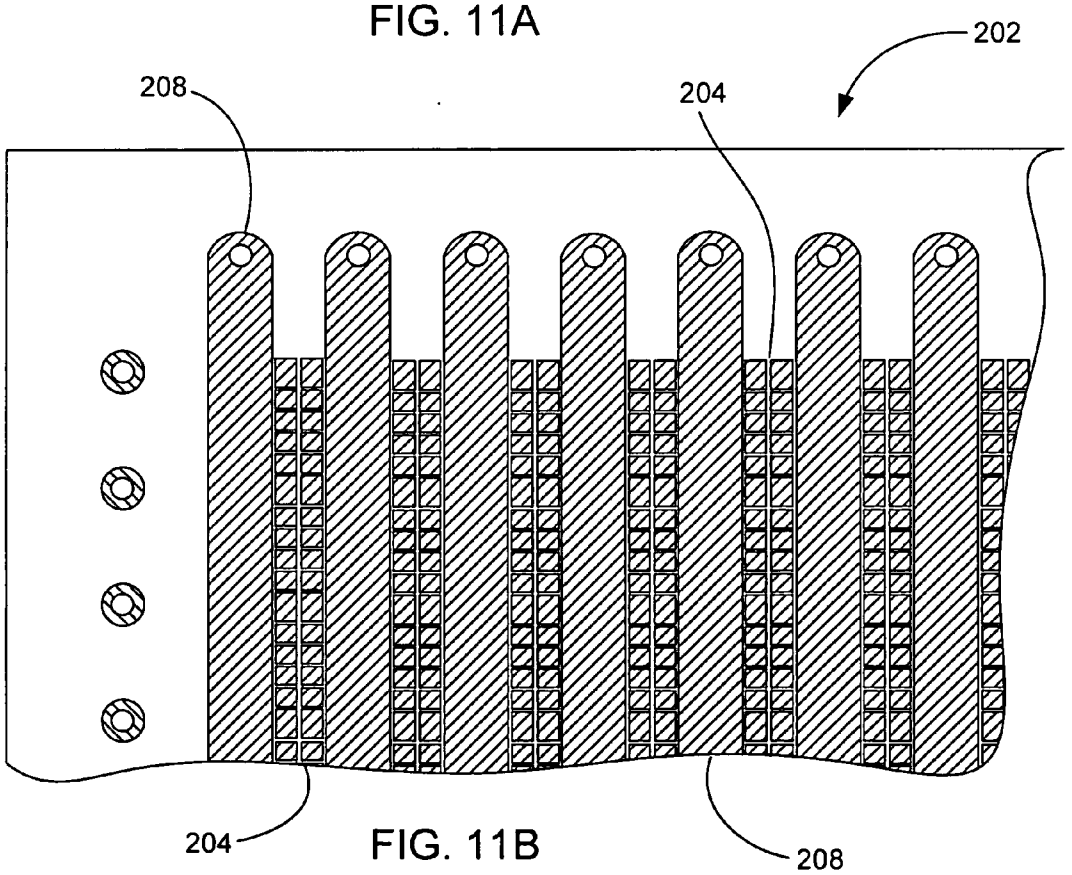

FIG. 11B

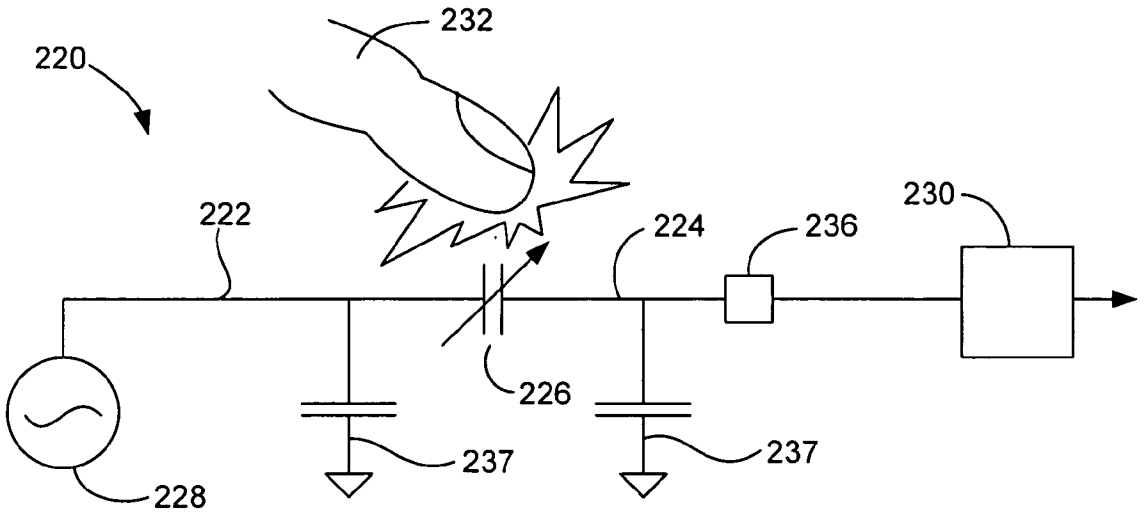

FIG. 12

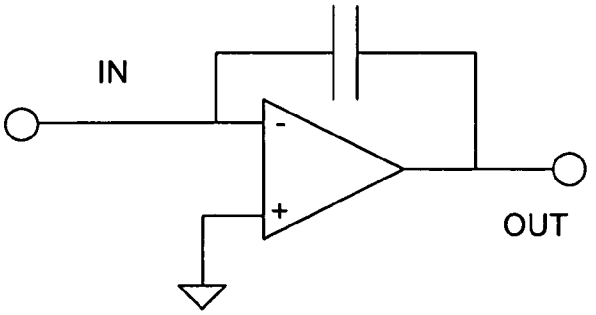

FIG. 13

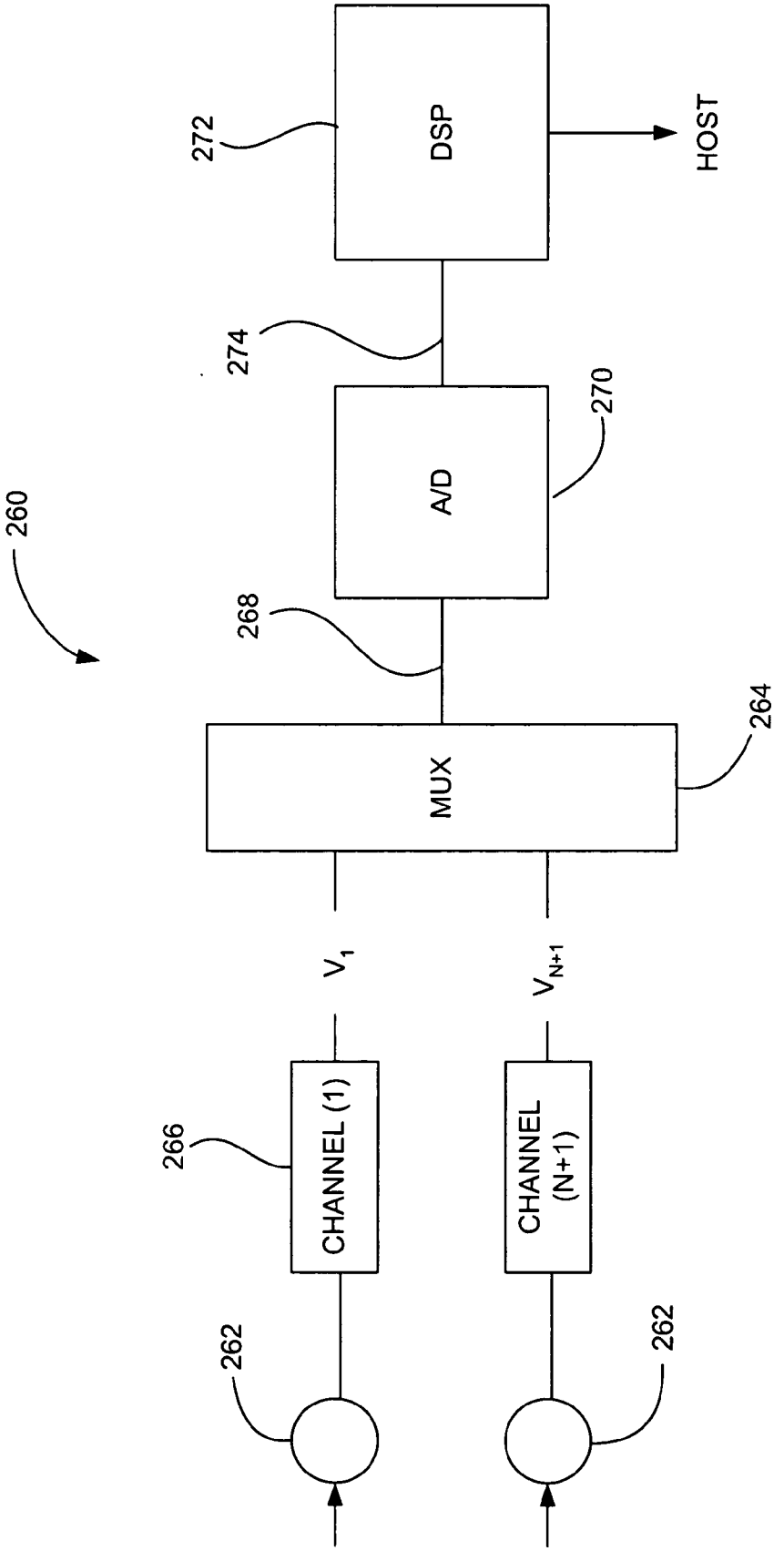
260
262
262
266
CHANNEL (1)
CHANNEL (N+1)
V_1
V_{N+1}
MUX
264
268
A/D
270
274
DSP
272
HOST

FIG. 14

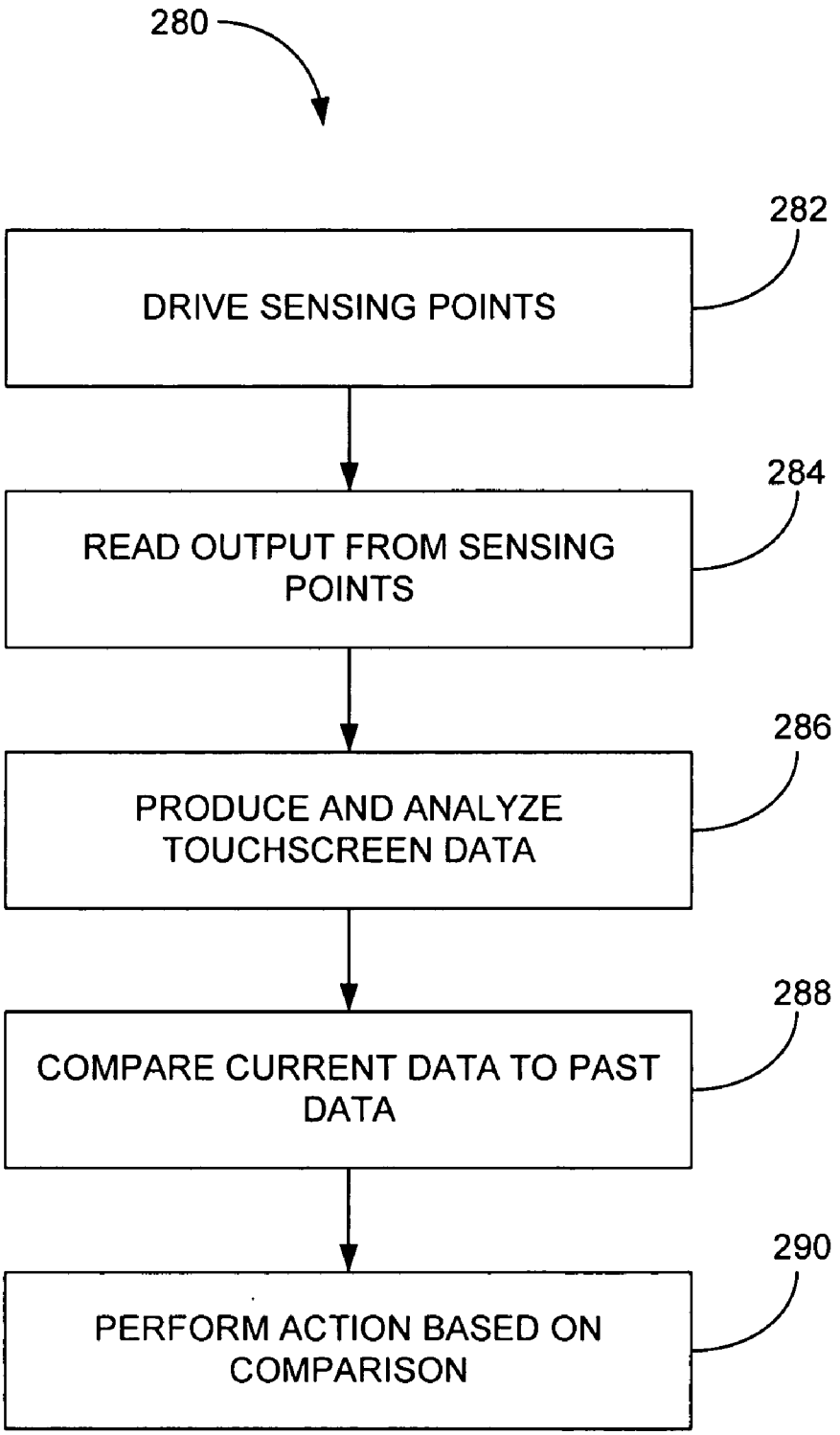
280
282
DRIVE SENSING POINTS
284
READ OUTPUT FROM SENSING POINTS
286
PRODUCE AND ANALYZE TOUCHSCREEN DATA
288
COMPARE CURRENT DATA TO PAST DATA
290
PERFORM ACTION BASED ON COMPARISON

FIG. 15

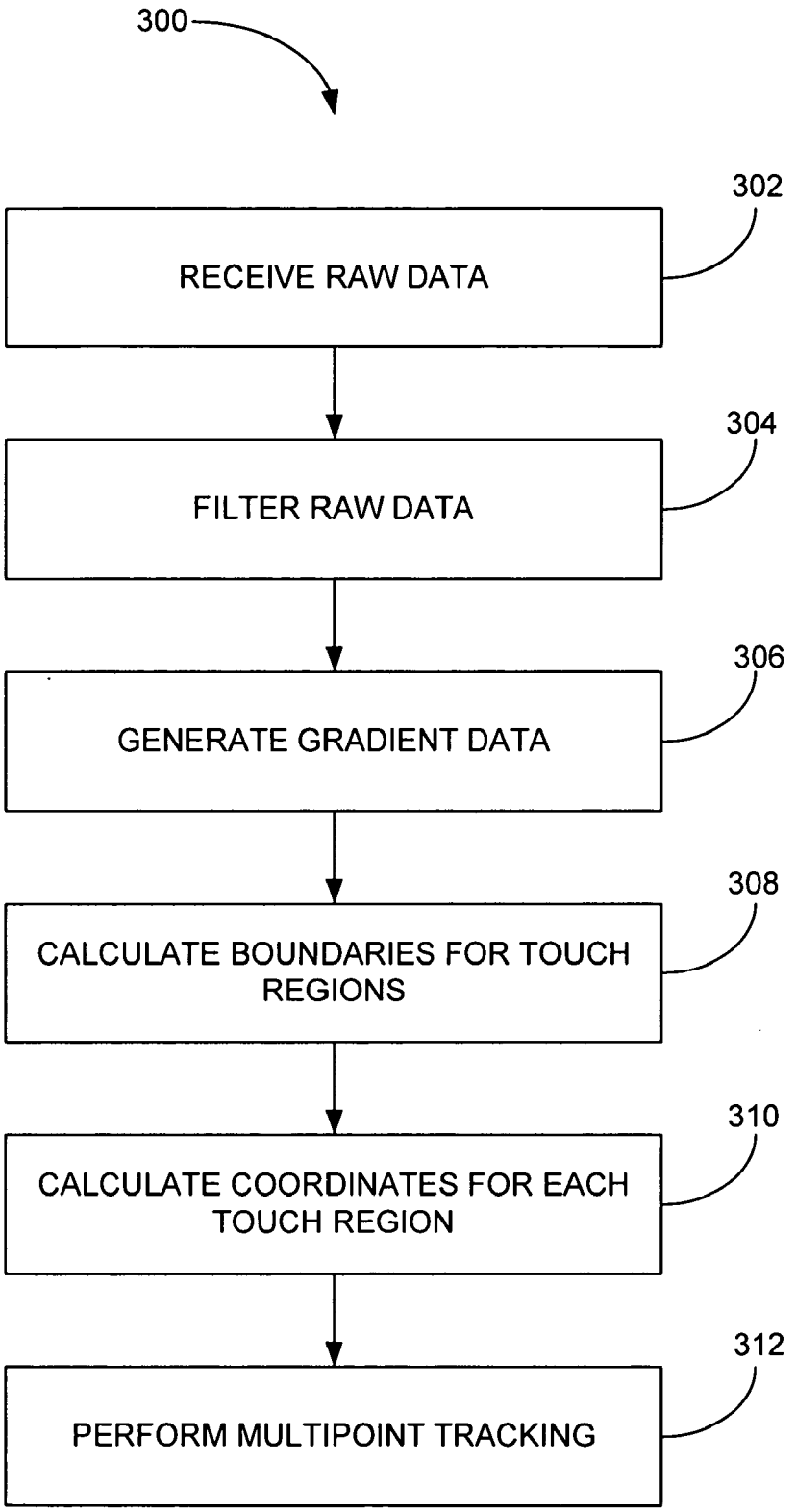
300
302
RECEIVE RAW DATA
304
FILTER RAW DATA
306
GENERATE GRADIENT DATA
308
CALCULATE BOUNDARIES FOR TOUCH REGIONS
310
CALCULATE COORDINATES FOR EACH TOUCH REGION
312
PERFORM MULTIPOINT TRACKING

FIG. 16

RAW DATA INCLUDING NOISE

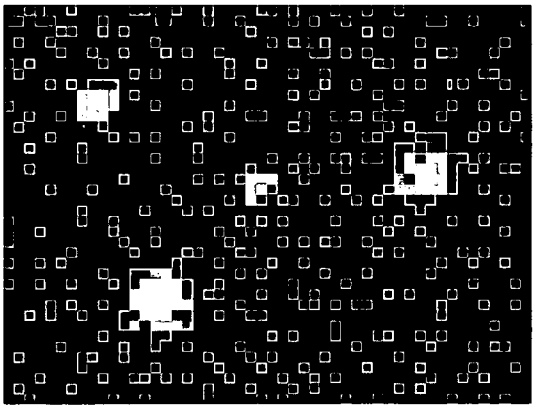

FIG. 17A

FILTERED DATA

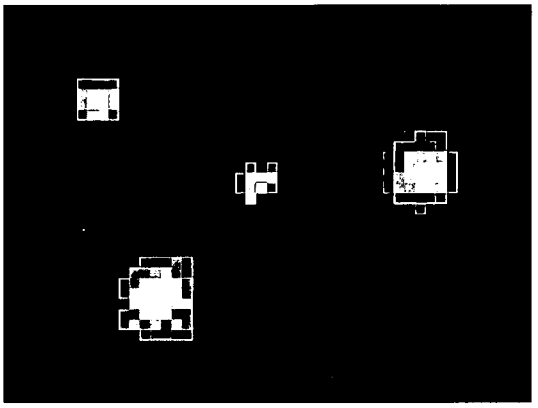

FIG. 17B

GRADIENT DATA

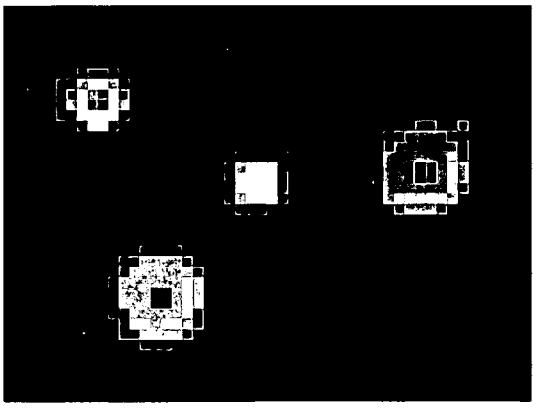

FIG. 17C

TOUCH REGIONS

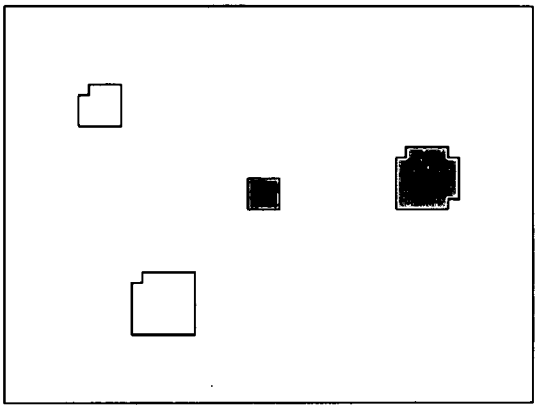

FIG. 17D

COORDINATES OF TOUCH REGIONS

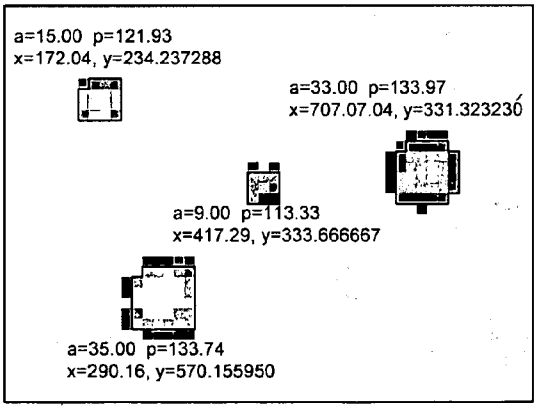

FIG. 17E

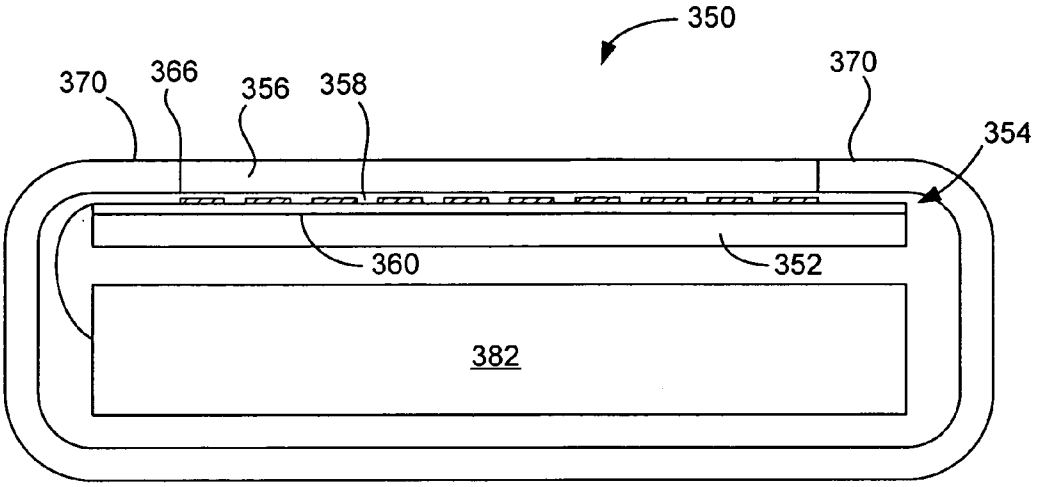
350
370
366
356
358
370
354
360
352
382

FIG. 18

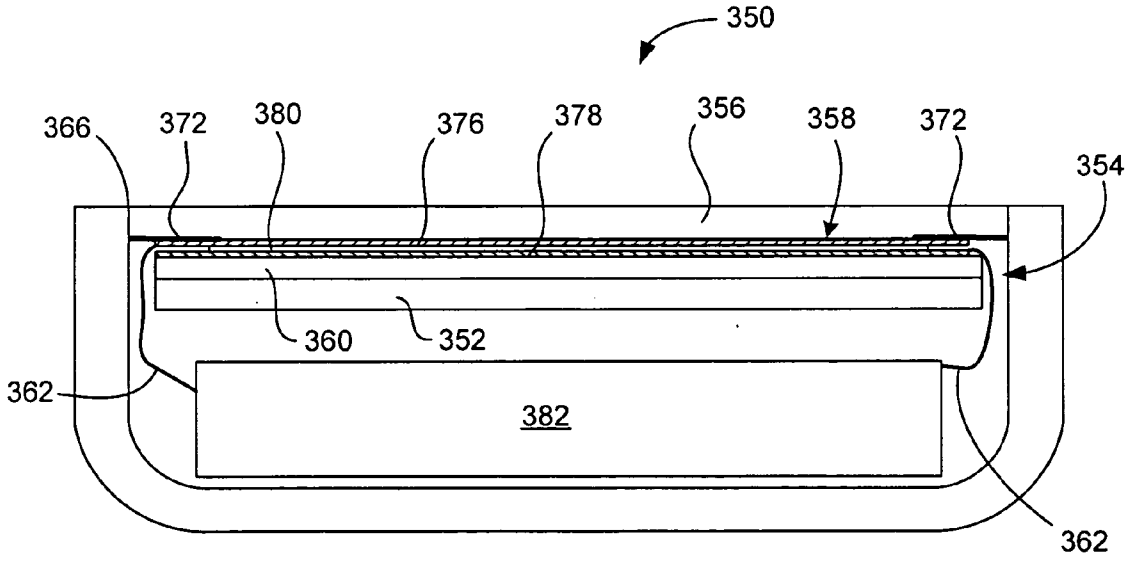
350
366
372
380
376
378
356
358
372
354
360
352
362
382
362

FIG. 19

MULTIPOINT TOUCHSCREEN

BACKGROUND OF THE INVENTION

[0001] 1. Field of the Invention

[0002] The present invention relates generally to an electronic device having a touch screen. More particularly, the present invention relates to a touch screen capable of sensing multiple points at the same time.

[0003] 2. Description of the Related Art

[0004] There exist today many styles of input devices for performing operations in a computer system. The operations generally correspond to moving a cursor and/or making selections on a display screen. By way of example, the input devices may include buttons or keys, mice, trackballs, touch pads, joy sticks, touch screens and the like. Touch screens, in particular, are becoming increasingly popular because of their ease and versatility of operation as well as to their declining price. Touch screens allow a user to make selections and move a cursor by simply touching the display screen via a finger or stylus. In general, the touch screen recognizes the touch and position of the touch on the display screen and the computer system interprets the touch and thereafter performs an action based on the touch event.

[0005] Touch screens typically include a touch panel, a controller and a software driver. The touch panel is a clear panel with a touch sensitive surface. The touch panel is positioned in front of a display screen so that the touch sensitive surface covers the viewable area of the display screen. The touch panel registers touch events and sends these signals to the controller. The controller processes these signals and sends the data to the computer system. The software driver translates the touch events into computer events.

[0006] There are several types of touch screen technologies including resistive, capacitive, infrared, surface acoustic wave, electromagnetic, near field imaging, etc. Each of these devices has advantages and disadvantages that are taken into account when designing or configuring a touch screen. In resistive technologies, the touch panel is coated with a thin metallic electrically conductive and resistive layer. When the panel is touched, the layers come into contact thereby closing a switch that registers the position of the touch event. This information is sent to the controller for further processing. In capacitive technologies, the touch panel is coated with a material that stores electrical charge. When the panel is touched, a small amount of charge is drawn to the point of contact. Circuits located at each corner of the panel measure the charge and send the information to the controller for processing.

[0007] In surface acoustic wave technologies, ultrasonic waves are sent horizontally and vertically over the touch screen panel as for example by transducers. When the panel is touched, the acoustic energy of the waves are absorbed. Sensors located across from the transducers detect this change and send the information to the controller for processing. In infrared technologies, light beams are sent horizontally and vertically over the touch panel as for example by light emitting diodes. When the panel is touched, some of the light beams emanating from the light emitting diodes are interrupted. Light detectors located across from the light emitting diodes detect this change and send this information to the controller for processing.

[0008] One problem found in all of these technologies is that they are only capable of reporting a single point even when multiple objects are placed on the sensing surface. That is, they lack the ability to track multiple points of contact simultaneously. In resistive and capacitive technologies, an average of all simultaneously occurring touch points are determined and a single point which falls somewhere between the touch points is reported. In surface wave and infrared technologies, it is impossible to discern the exact position of multiple touch points that fall on the same horizontal or vertical lines due to masking. In either case, faulty results are generated.

[0009] These problems are particularly problematic in tablet PCs where one hand is used to hold the tablet and the other is used to generate touch events. For example, as shown in **FIGS. 1A and 1B**, holding a tablet **2** causes the thumb **3** to overlap the edge of the touch sensitive surface **4** of the touch screen **5**. As shown in **FIG. 1A**, if the touch technology uses averaging, the technique used by resistive and capacitive panels, then a single point that falls somewhere between the thumb **3** of the left hand and the index finger **6** of the right hand would be reported. As shown in **FIG. 1B**, if the technology uses projection scanning, the technique used by infra red and SAW panels, it is hard to discern the exact vertical position of the index finger **6** due to the large vertical component of the thumb **3**. The tablet **2** can only resolve the patches shown in gray. In essence, the thumb **3** masks out the vertical position of the index finger **6**.

SUMMARY OF THE INVENTION

[0010] The invention relates, in one embodiment, to a touch panel having a transparent capacitive sensing medium configured to detect multiple touches or near touches that occur at the same time and at distinct locations in the plane of the touch panel and to produce distinct signals representative of the location of the touches on the plane of the touch panel for each of the multiple touches.

[0011] The invention relates, in another embodiment, to a display arrangement. The display arrangement includes a display having a screen for displaying a graphical user interface. The display arrangement further includes a transparent touch panel allowing the screen to be viewed therethrough and capable of recognizing multiple touch events that occur at different locations on the touch sensitive surface of the touch screen at the same time and to output this information to a host device.

[0012] The invention relates, in another embodiment, to a computer implemented method. The method includes receiving multiple touches on the surface of a transparent touch screen at the same time. The method also includes separately recognizing each of the multiple touches. The method further includes reporting touch data based on the recognized multiple touches.

[0013] The invention relates, in another embodiment, to a computer system. The computer system includes a processor configured to execute instructions and to carry out operations associated with the computer system. The computer also includes a display device that is operatively coupled to

the processor. The computer system further includes a touch screen that is operatively coupled to the processor. The touch screen is a substantially transparent panel that is positioned in front of the display. The touch screen is configured to track multiple objects, which rest on, tap on or move across the touch screen at the same time. The touch screen includes a capacitive sensing device that is divided into several independent and spatially distinct sensing points that are positioned throughout the plane of the touch screen. Each sensing point is capable of generating a signal at the same time. The touch screen also includes a sensing circuit that acquires data from the sensing device and that supplies the acquired data to the processor.

[0014] The invention relates, in another embodiment, to a touch screen method. The method includes driving a plurality of sensing points. The method also includes reading the outputs from all the sensing lines connected to the sensing points. The method further includes producing and analyzing an image of the touch screen plane at one moment in time in order to determine where objects are touching the touch screen. The method additionally includes comparing the current image to a past image in order to determine a change at the objects touching the touch screen.

[0015] The invention relates, in another embodiment, to a digital signal processing method. The method includes receiving raw data. The raw data includes values for each transparent capacitive sensing node of a touch screen. The method also includes filtering the raw data. The method further includes generating gradient data. The method additionally includes calculating the boundaries for touch regions base on the gradient data. Moreover, the method includes calculating the coordinates for each touch region.

BRIEF DESCRIPTION OF THE DRAWINGS

[0016] The invention will be readily understood by the following detailed description in conjunction with the accompanying drawings, wherein like reference numerals designate like structural elements, and in which:

[0017] **FIGS. 1A and 1B** show a user holding conventional touch screens.

[0018] **FIG. 2** is a perspective view of a display arrangement, in accordance with one embodiment of the present invention.

[0019] **FIG. 3** shows an image of the touch screen plane at a particular point in time, in accordance with one embodiment of the present invention.

[0020] **FIG. 4** is a multipoint touch method, in accordance with one embodiment of the present invention.

[0021] **FIG. 5** is a block diagram of a computer system, in accordance with one embodiment of the present invention.

[0022] **FIG. 6** is a partial top view of a transparent multiple point touch screen, in accordance with one embodiment of the present invention.

[0023] **FIG. 7** is a partial top view of a transparent multi point touch screen, in accordance with one embodiment of the present invention.

[0024] **FIG. 8** is a front elevation view, in cross section of a display arrangement, in accordance with one embodiment of the present invention.

[0025] **FIG. 9** is a top view of a transparent multipoint touch screen, in accordance with another embodiment of the present invention.

[0026] **FIG. 10** is a partial front elevation view, in cross section of a display arrangement, in accordance with one embodiment of the present invention.

[0027] **FIGS. 11A and 11B** are partial top view diagrams of a driving layer and a sensing layer, in accordance with one embodiment.

[0028] **FIG. 12** is a simplified diagram of a mutual capacitance circuit, in accordance with one embodiment of the present invention.

[0029] **FIG. 13** is a diagram of a charge amplifier, in accordance with one embodiment of the present invention.

[0030] **FIG. 14** is a block diagram of a capacitive sensing circuit, in accordance with one embodiment of the present invention.

[0031] **FIG. 15** is a flow diagram, in accordance with one embodiment of the present invention.

[0032] **FIG. 16** is a flow diagram of a digital signal processing method, in accordance with one embodiment of the present invention.

[0033] FIGS. **17**A-E show touch data at several steps, in accordance with one embodiment of the present invention

[0034] **FIG. 18** is a side elevation view of an electronic device, in accordance with one embodiments of the present invention.

[0035] **FIG. 19** is a side elevation view of an electronic device, in accordance with one embodiments of the present invention.

DETAILED DESCRIPTION OF THE INVENTION

[0036] Embodiments of the invention are discussed below with reference to **FIGS. 2-19**. However, those skilled in the art will readily appreciate that the detailed description given herein with respect to these figures is for explanatory purposes as the invention extends beyond these limited embodiments.

[0037] **FIG. 2** is a perspective view of a display arrangement **30**, in accordance with one embodiment of the present invention. The display arrangement **30** includes a display **34** and a transparent touch screen **36** positioned in front of the display **34**. The display **34** is configured to display a graphical user interface (GUI) including perhaps a pointer or cursor as well as other information to the user. The transparent touch screen **36**, on the other hand, is an input device that is sensitive to a user's touch, allowing a user to interact with the graphical user interface on the display **34**. By way of example, the touch screen **36** may allow a user to move an input pointer or make selections on the graphical user interface by simply pointing at the GUI on the display **34**.

[0038] In general, touch screens **36** recognize a touch event on the surface **38** of the touch screen **36** and thereafter output this information to a host device. The host device may for example correspond to a computer such as a desktop, laptop, handheld or tablet computer. The host device interprets the touch event and thereafter performs an action based

on the touch event. Conventionally, touch screens have only been capable of recognizing a single touch event even when the touch screen is touched at multiple points at the same time (e.g., averaging, masking, etc.). Unlike conventional touch screens, however, the touch screen **36** shown herein is configured to recognize multiple touch events that occur at different locations on the touch sensitive surface **38** of the touch screen **36** at the same time. That is, the touch screen **36** allows for multiple contact points T**1**-T**4** to be tracked simultaneously, i.e., if four objects are touching the touch screen, then the touch screen tracks all four objects. As shown, the touch screen **36** generates separate tracking signals S**1**-S**4** for each touch point T**1**-T**4** that occurs on the surface of the touch screen **36** at the same time. The number of recognizable touches may be about **15**. **15** touch points allows for all **10** fingers, two palms and **3** others.

[**0039**] The multiple touch events can be used separately or together to perform singular or multiple actions in the host device. When used separately, a first touch event may be used to perform a first action while a second touch event may be used to perform a second action that is different than the first action. The actions may for example include moving an object such as a cursor or pointer, scrolling or panning, adjusting control settings, opening a file or document, viewing a menu, making a selection, executing instructions, operating a peripheral device connected to the host device etc. When used together, first and second touch events may be used for performing one particular action. The particular action may for example include logging onto a computer or a computer network, permitting authorized individuals access to restricted areas of the computer or computer network, loading a user profile associated with a user's preferred arrangement of the computer desktop, permitting access to web content, launching a particular program, encrypting or decoding a message, and/or the like.

[**0040**] Recognizing multiple touch events is generally accomplished with a multipoint sensing arrangement. The multipoint sensing arrangement is capable of simultaneously detecting and monitoring touches and the magnitude of those touches at distinct points across the touch sensitive surface **38** of the touch screen **36**. The multipoint sensing arrangement generally provides a plurality of transparent sensor coordinates or nodes **42** that work independent of one another and that represent different points on the touch screen **36**. When plural objects are pressed against the touch screen **36**, one or more sensor coordinates are activated for each touch point as for example touch points Ti -T**4**. The sensor coordinates **42** associated with each touch point T**1**-T**4** produce the tracking signals S**1**-S**4**.

[**0041**] In one embodiment, the touch screen **36** includes a plurality of capacitance sensing nodes **42**. The capacitive sensing nodes may be widely varied. For example, the capacitive sensing nodes may be based on self capacitance or mutual capacitance. In self capacitance, the "self" capacitance of a single electrode is measured as for example relative to ground. In mutual capacitance, the mutual capcitance between at least first and second electrodes is measured. In either cases, each of the nodes **42** works independent of the other nodes **42** so as to produce simultaneously occurring signals representative of different points on the touch screen **36**.

[**0042**] In order to produce a transparent touch screen **36**, the capacitance sensing nodes **42** are formed with a transparent conductive medium such as indium tin oxide (ITO). In self capacitance sensing arrangements, the transparent conductive medium is patterned into spatially separated electrodes and traces. Each of the electrodes represents a different coordinate and the traces connect the electrodes to a capacitive sensing circuit. The coordinates may be associated with Cartesian coordinate system (x and y), Polar coordinate system (r, θ) or some other coordinate system. In a Cartesian coordinate system, the electrodes may be positioned in columns and rows so as to form a grid array with each electrode representing a different x, y coordinate. During operation, the capacitive sensing circuit monitors changes in capacitance that occur at each of the electrodes. The positions where changes occur and the magnitude of those changes are used to help recognize the multiple touch events. A change in capacitance typically occurs at an electrode when a user places an object such as a finger in close proximity to the electrode, i.e., the object steals charge thereby affecting the capacitance.

[**0043**] In mutual capacitance, the transparent conductive medium is patterned into a group of spatially separated lines formed on two different layers. Driving lines are formed on a first layer and sensing lines are formed on a second layer. Although separated by being on different layers, the sensing lines traverse, intersect or cut across the driving lines thereby forming a capacitive coupling node. The manner in which the sensing lines cut across the driving lines generally depends on the coordinate system used. For example, in a Cartesian coordinate system, the sensing lines are perpendicular to the driving lines thereby forming nodes with distinct x and y coordinates. Alternatively, in a polar coordinate system, the sensing lines may be concentric circles and the driving lines may be radially extending lines (or vice versa). The driving lines are connected to a voltage source and the sensing lines are connected to capacitive sensing circuit. During operation, a current is driven through one driving line at a time, and because of capacitive coupling, the current is carried through to the sensing lines at each of the nodes (e.g., intersection points). Furthermore, the sensing circuit monitors changes in capacitance that occurs at each of the nodes. The positions where changes occur and the magnitude of those changes are used to help recognize the multiple touch events. A change in capacitance typically occurs at a capacitive coupling node when a user places an object such as a finger in close proximity to the capacitive coupling node, i.e., the object steals charge thereby affecting the capacitance.

[**0044**] By way of example, the signals generated at the nodes **42** of the touch screen **36** may be used to produce an image of the touch screen plane at a particular point in time. Referring to **FIG. 3**, each object in contact with a touch sensitive surface **38** of the touch screen **36** produces a contact patch area **44**. Each of the contact patch areas **44** covers several nodes **42**. The covered nodes **42** detect surface contact while the remaining nodes **42** do not detect surface contact. As a result, a pixilated image of the touch screen plane can be formed. The signals for each contact patch area **44** may be grouped together to form individual images representative of the contact patch area **44**. The image of each contact patch area **44** may include high and low points based on the pressure at each point. The shape of the image as well as the high and low points within the image may be used to differentiate contact patch areas **44** that are in close proximity to one another. Furthermore, the

current image, and more particularly the image of each contact patch area **44** can be compared to previous images to determine what action to perform in a host device.

[**0045**] Referring back to **FIG. 2**, the display arrangement **30** may be a stand alone unit or it may integrated with other devices. When stand alone, the display arrangement **32** (or each of its components) acts like a peripheral device (monitor) that includes its own housing and that can be coupled to a host device through wired or wireless connections. When integrated, the display arrangement **30** shares a housing and is hard wired into the host device thereby forming a single unit. By way of example, the display arrangement **30** may be disposed inside a variety of host devices including but not limited to general purpose computers such as a desktop, laptop or tablet computers, handhelds such as PDAs and media players such as music players, or peripheral devices such as cameras, printers and/or the like.

[**0046**] **FIG. 4** is a multipoint touch method **45**, in accordance with one embodiment of the present invention. The method generally begins at block **46** where multiple touches are received on the surface of the touch screen at the same time. This may for example be accomplished by placing multiple fingers on the surface of the touch screen. Following block **46**, the process flow proceeds to block **47** where each of the multiple touches is separately recognized by the touch screen. This may for example be accomplished by multipoint capacitance sensors located within the touch screen. Following block **47**, the process flow proceeds to block **48** where the touch data based on multiple touches is reported. The touch data may for example be reported to a host device such as a general purpose computer.

[**0047**] **FIG. 5** is a block diagram of a computer system **50**, in accordance with one embodiment of the present invention. The computer system **50** may correspond to personal computer systems such as desktops, laptops, tablets or handhelds. By way of example, the computer system may correspond to any Apple or PC based computer system. The computer system may also correspond to public computer systems such as information kiosks, automated teller machines (ATM), point of sale machines (POS), industrial machines, gaming machines, arcade machines, vending machines, airline e-ticket terminals, restaurant reservation terminals, customer service stations, library terminals, learning devices, and the like.

[**0048**] As shown, the computer system **50** includes a processor **56** configured to execute instructions and to carry out operations associated with the computer system **50**. For example, using instructions retrieved for example from memory, the processor **56** may control the reception and manipulation of input and output data between components of the computing system **50**. The processor **56** can be a single-chip processor or can be implemented with multiple components.

[**0049**] In most cases, the processor **56** together with an operating system operates to execute computer code and produce and use data. The computer code and data may reside within a program storage block **58** that is operatively coupled to the processor **56**. Program storage block **58** generally provides a place to hold data that is being used by the computer system **50**. By way of example, the program storage block may include Read-Only Memory (ROM) **60**, Random-Access Memory (RAM) **62**, hard disk drive **64** and/or the like. The computer code and data could also reside on a removable storage medium and loaded or installed onto the computer system when needed. Removable storage mediums include, for example, CD-ROM, PC-CARD, floppy disk, magnetic tape, and a network component.

[**0050**] The computer system **50** also includes an input/output (I/O) controller **66** that is operatively coupled to the processor **56**. The (I/O) controller **66** may be integrated with the processor **56** or it may be a separate component as shown. The I/O controller **66** is generally configured to control interactions with one or more I/O devices. The I/O controller **66** generally operates by exchanging data between the processor and the I/O devices that desire to communicate with the processor. The I/O devices and the I/O controller typically communicate through a data link **67**. The data link **67** may be a one way link or two way link. In some cases, the I/O devices may be connected to the I/O controller **66** through wired connections. In other cases, the I/O devices may be connected to the I/O controller **66** through wireless connections. By way of example, the data link **67** may correspond to PS/**2**, USB, Firewire, IR, RF, Bluetooth or the like.

[**0051**] The computer system **50** also includes a display device **68** that is operatively coupled to the processor **56**. The display device **68** may be a separate component (peripheral device) or it may be integrated with the processor and program storage to form a desktop computer (all in one machine), a laptop, handheld or tablet or the like. The display device **68** is configured to display a graphical user interface (GUI) including perhaps a pointer or cursor as well as other information to the user. By way of example, the display device **68** may be a monochrome display, color graphics adapter (CGA) display, enhanced graphics adapter (EGA) display, variable-graphics-array (VGA) display, super VGA display, liquid crystal display (e.g., active matrix, passive matrix and the like), cathode ray tube (CRT), plasma displays and the like.

[**0052**] The computer system **50** also includes a touch screen **70** that is operatively coupled to the processor **56**. The touch screen **70** is a transparent panel that is positioned in front of the display device **68**. The touch screen **70** may be integrated with the display device **68** or it may be a separate component. The touch screen **70** is configured to receive input from a user's touch and to send this information to the processor **56**. In most cases, the touch screen **70** recognizes touches and the position and magnitude of touches on its surface. The touch screen **70** reports the touches to the processor **56** and the processor **56** interprets the touches in accordance with its programming. For example, the processor **56** may initiate a task in accordance with a particular touch.

[**0053**] In accordance with one embodiment, the touch screen **70** is capable of tracking multiple objects, which rest on, tap on, or move across the touch sensitive surface of the touch screen at the same time. The multiple objects may for example correspond to fingers and palms. Because the touch screen is capable of tracking multiple objects, a user may perform several touch initiated tasks at the same time. For example, the user may select an onscreen button with one finger, while moving a cursor with another finger. In addition, a user may move a scroll bar with one finger while

selecting an item from a menu with another finger. Furthermore, a first object may be dragged with one finger while a second object may be dragged with another finger. Moreover, gesturing may be performed with more than one finger.

[0054] To elaborate, the touch screen **70** generally includes a sensing device **72** configured to detect an object in close proximity thereto and/or the pressure exerted thereon. The sensing device **72** may be widely varied. In one particular embodiment, the sensing device **72** is divided into several independent and spatially distinct sensing points, nodes or regions **74** that are positioned throughout the touch screen **70**. The sensing points **74**, which are typically hidden from view, are dispersed about the touch screen **70** with each sensing point **74** representing a different position on the surface of the touch screen **70** (or touch screen plane). The sensing points **74** may be positioned in a grid or a pixel array where each pixilated sensing point **74** is capable of generating a signal at the same time. In the simplest case, a signal is produced each time an object is positioned over a sensing point **74**. When an object is placed over multiple sensing points **74** or when the object is moved between or over multiple sensing point **74**, multiple signals are generated.

[0055] The number and configuration of the sensing points **74** may be widely varied. The number of sensing points **74** generally depends on the desired sensitivity as well as the desired transparency of the touch screen **70**. More nodes or sensing points generally increases sensitivity, but reduces transparency (and vice versa). With regards to configuration, the sensing points **74** generally map the touch screen plane into a coordinate system such as a Cartesian coordinate system, a Polar coordinate system or some other coordinate system. When a Cartesian coordinate system is used (as shown), the sensing points **74** typically correspond to x and y coordinates. When a Polar coordinate system is used, the sensing points typically correspond to radial (r) and angular coordinates (θ).

[0056] The touch screen **70** may include a sensing circuit **76** that acquires the data from the sensing device **72** and that supplies the acquired data to the processor **56**. Alternatively, the processor may include this functionality. In one embodiment, the sensing circuit **76** is configured to send raw data to the processor **56** so that the processor **56** processes the raw data. For example, the processor **56** receives data from the sensing circuit **76** and then determines how the data is to be used within the computer system **50**. The data may include the coordinates of each sensing point **74** as well as the pressure exerted on each sensing point **74**. In another embodiment, the sensing circuit **76** is configured to process the raw data itself. That is, the sensing circuit **76** reads the pulses from the sensing points **74** and turns them into data that the processor **56** can understand. The sensing circuit **76** may perform filtering and/or conversion processes. Filtering processes are typically implemented to reduce a busy data stream so that the processor **56** is not overloaded with redundant or non-essential data. The conversion processes may be implemented to adjust the raw data before sending or reporting them to the processor **56**. The conversions may include determining the center point for each touch region (e.g., centroid).

[0057] The sensing circuit **76** may include a storage element for storing a touch screen program, which is a capable of controlling different aspects of the touch screen **70**. For example, the touch screen program may contain what type of value to output based on the sensing points **74** selected (e.g., coordinates). In fact, the sensing circuit in conjunction with the touch screen program may follow a predetermined communication protocol. As is generally well known, communication protocols are a set of rules and procedures for exchanging data between two devices. Communication protocols typically transmit information in data blocks or packets that contain the data to be transmitted, the data required to direct the packet to its destination, and the data that corrects errors that occur along the way. By way of example, the sensing circuit may place the data in a HID format (Human Interface Device).

[0058] The sensing circuit **76** generally includes one or more microcontrollers, each of which monitors one or more sensing points **74**. The microcontrollers may for example correspond to an application specific integrated circuit (ASIC), which works with firmware to monitor the signals from the sensing device **72** and to process the monitored signals and to report this information to the processor **56**.

[0059] In accordance with one embodiment, the sensing device **72** is based on capacitance. As should be appreciated, whenever two electrically conductive members come close to one another without actually touching, their electric fields interact to form capacitance. In most cases, the first electrically conductive member is a sensing point **74** and the second electrically conductive member is an object **80** such as a finger. As the object **80** approaches the surface of the touch screen **70**, a tiny capacitance forms between the object **80** and the sensing points **74** in close proximity to the object **80**. By detecting changes in capacitance at each of the sensing points **74** and noting the position of the sensing points, the sensing circuit can recognize multiple objects, and determine the location, pressure, direction, speed and acceleration of the objects **80** as they are moved across the touch screen **70**. For example, the sensing circuit can determine when and where each of the fingers and palm of one or more hands are touching as well as the pressure being exerted by the finger and palm of the hand(s) at the same time.

[0060] The simplicity of capacitance allows for a great deal of flexibility in design and construction of the sensing device **72**. By way of example, the sensing device **72** may be based on self capacitance or mutual capacitance. In self capacitance, each of the sensing points **74** is provided by an individual charged electrode. As an object approaches the surface of the touch screen **70**, the object capacitive couples to those electrodes in close proximity to the object thereby stealing charge away from the electrodes. The amount of charge in each of the electrodes are measured by the sensing circuit **76** to determine the positions of multiple objects when they touch the touch screen **70**. In mutual capacitance, the sensing device **72** includes a two layer grid of spatially separated lines or wires. In the simplest case, the upper layer includes lines in rows while the lower layer includes lines in columns (e.g., orthogonal). The sensing points **74** are provided at the intersections of the rows and columns. During operation, the rows are charged and the charge capacitively couples to the columns at the intersection. As an object approaches the surface of the touch screen, the object capacitive couples to the rows at the intersections in close proximity to the object thereby stealing charge away from the rows and therefore the columns as well. The amount of

charge in each of the columns is measured by the sensing circuit **76** to determine the positions of multiple objects when they touch the touch screen **70**.

[**0061**] **FIG. 6** is a partial top view of a transparent multiple point touch screen **100**, in accordance with one embodiment of the present invention. By way of example, the touch screen **100** may generally correspond to the touch screen shown in **FIGS. 2 and 4**. The multipoint touch screen **100** is capable of sensing the position and the pressure of multiple objects at the same time. This particular touch screen **100** is based on self capacitance and thus it includes a plurality of transparent capacitive sensing electrodes **102**, which each represent different coordinates in the plane of the touch screen **100**. The electrodes **102** are configured to receive capacitive input from one or more objects touching the touch screen **100** in the vicinity of the electrodes **102**. When an object is proximate an electrode **102**, the object steals charge thereby affecting the capacitance at the electrode **102**. The electrodes **102** are connected to a capacitive sensing circuit **104** through traces **106** that are positioned in the gaps **108** found between the spaced apart electrodes **102**. The electrodes **102** are spaced apart in order to electrically isolate them from each other as well as to provide a space for separately routing the sense traces **106**. The gap **108** is preferably made small so as to maximize the sensing area and to minimize optical differences between the space and the transparent electrodes.

[**0062**] As shown, the sense traces **106** are routed from each electrode **102** to the sides of the touch screen **100** where they are connected to the capacitive sensing circuit **104**. The capacitive sensing circuit **104** includes one or more sensor ICs **110** that measure the capacitance at each electrode **102** and that reports its findings or some form thereof to a host controller. The sensor ICs **110** may for example convert the analog capacitive signals to digital data and thereafter transmit the digital data over a serial bus to a host controller. Any number of sensor ICs may be used. For example, a single chip may be used for all electrodes, or multiple chips may be used for a single or group of electrodes. In most cases, the sensor ICs **110** report tracking signals, which are a function of both the position of the electrode **102** and the intensity of the capacitance at the electrode **102**.

[**0063**] The electrodes **102**, traces **106** and sensing circuit **104** are generally disposed on an optical transmissive member **112**. In most cases, the optically transmissive member **112** is formed from a clear material such as glass or plastic. The electrode **102** and traces **106** may be placed on the member **112** using any suitable patterning technique including for example, deposition, etching, printing and the like. The electrodes **102** and sense traces **106** can be made from any suitable transparent conductive material. By way of example, the electrodes **102** and traces **106** may be formed from indium tin oxide (ITO). In addition, the sensor ICs **110** of the sensing circuit **104** can be electrically coupled to the traces **106** using any suitable techniques. In one implementation, the sensor ICs **110** are placed directly on the member **112** (flip chip). In another implementation, a flex circuit is bonded to the member **112**, and the sensor ICs **110** are attached to the flex circuit. In yet another implementation, a flex circuit is bonded to the member **112**, a PCB is bonded to the flex circuit and the sensor ICs **110** are attached to the PCB. The sensor ICs may for example be capcitance sensing ICs such as those manufactured by Synaptics of San Jose, Calif., Fingerworks of Newark, Del. or Alps of San Jose, Calif.

[**0064**] The distribution of the electrodes **102** may be widely varied. For example, the electrodes **102** may be positioned almost anywhere in the plane of the touch screen **100**. The electrodes **102** may be positioned randomly or in a particular pattern about the touch screen **100**. With regards to the later, the position of the electrodes **102** may depend on the coordinate system used. For example, the electrodes **102** may be placed in an array of rows and columns for Cartesian coordinates or an array of concentric and radial segments for polar coordinates. Within each array, the rows, columns, concentric or radial segments may be stacked uniformly relative to the others or they may be staggered or offset relative to the others. Additionally, within each row or column, or within each concentric or radial segment, the electrodes **102** may be staggered or offset relative to an adjacent electrode **102**.

[**0065**] Furthermore, the electrodes **102** may be formed from almost any shape whether simple (e.g., squares, circles, ovals, triangles, rectangles, polygons, and the like) or complex (e.g., random shapes). Further still, the shape of the electrodes **102** may have identical shapes or they may have different shapes. For example, one set of electrodes **102** may have a first shape while a second set of electrodes **102** may have a second shape that is different than the first shape. The shapes are generally chosen to maximize the sensing area and to minimize optical differences between the gaps and the transparent electrodes.

[**0066**] In addition, the size of the electrodes **102** may vary according to the specific needs of each device. In some cases, the size of the electrodes **102** corresponds to about the size of a finger tip. For example, the size of the electrodes **102** may be on the order of 4-5 mm2. In other cases, the size of the electrodes **102** are smaller than the size of the finger tip so as to improve resolution of the touch screen **100** (the finger can influence two or more electrodes at any one time thereby enabling interpolation). Like the shapes, the size of the electrodes **102** may be identical or they may be different. For example, one set of electrodes **102** may be larger than another set of electrodes **102**. Moreover, any number of electrodes **102** may be used. The number of electrodes **102** is typically determined by the size of the touch screen **100** as well as the size of each electrode **102**. In most cases, it would be desirable to increase the number of electrodes **102** so as to provide higher resolution, i.e., more information can be used for such things as acceleration.

[**0067**] Although the sense traces **106** can be routed a variety of ways, they are typically routed in manner that reduces the distance they have to travel between their electrode **102** and the sensor circuit **104**, and that reduces the size of the gaps **108** found between adjacent electrodes **102**. The width of the sense traces **106** are also widely varied. The widths are generally determined by the amount of charge being distributed there through, the number of adjacent traces **106**, and the size of the gap **108** through which they travel. It is generally desirable to maximize the widths of adjacent traces **106** in order to maximize the coverage inside the gaps **108** thereby creating a more uniform optical appearance.

[**0068**] In the illustrated embodiment, the electrodes **102** are positioned in a pixilated array. As shown, the electrodes

102 are positioned in rows **116** that extend to and from the sides of the touch screen **100**. Within each row **116**, the identical electrodes **102** are spaced apart and positioned laterally relative to one another (e.g., juxtaposed). Furthermore, the rows **116** are stacked on top of each other thereby forming the pixilated array. The sense traces **106** are routed in the gaps **108** formed between adjacent rows **106**. The sense traces **106** for each row are routed in two different directions. The sense traces **106** on one side of the row **116** are routed to a sensor IC **110** located on the left side and the sense traces **106** on the other side of the row **116** are routed to another sensor IC **110** located on the right side of the touch screen **100**. This is done to minimize the gap **108** formed between rows **116**. The gap **108** may for example be held to about 20 microns. As should be appreciated, the spaces between the traces can stack thereby creating a large gap between electrodes. If routed to one side, the size of the space would be substantially doubled thereby reducing the resolution of the touch screen. Moreover, the shape of the electrode **102** is in the form of a parallelogram, and more particularly a parallogram with sloping sides.

[**0069**] **FIG. 7** is a partial top view of a transparent multi point touch screen **120**, in accordance with one embodiment of the present invention. In this embodiment, the touch screen **120** is similar to the touch screen **100** shown in **FIG. 6**, however, unlike the touch screen **100** of **FIG. 6**, the touch screen **120** shown in **FIG. 7** includes electrodes **122** with different sizes. As shown, the electrodes **122** located in the center of the touch screen **120** are larger than the electrodes **122** located at the sides of the touch screen **120**. In fact, the height of the electrodes **122** gets correspondingly smaller when moving from the center to the edge of the touch screen **120**. This is done to make room for the sense traces **124** extending from the sides of the more centrally located electrodes **122**. This arrangement advantageously reduces the gap found between adjacent rows **126** of electrodes **122**. Although the height of each electrode **122** shrinks, the height H of the row **126** as well as the width W of each electrode **122** stays the same. In one configuration, the height of the row **126** is substantially equal to the width of each electrode **122**. For example, the height of the row **126** and the width of each electrode **122** may be about 4 mm to about 5 mm.

[**0070**] **FIG. 8** is a front elevation view, in cross section of a display arrangement **130**, in accordance with one embodiment of the present invention. The display arrangement **130** includes an LCD display **132** and a touch screen **134** positioned over the LCD display **132**. The touch screen may for example correspond to the touch screen shown in FIGS. **6** or **7**. The LCD display **132** may correspond to any conventional LCD display known in the art. Although not shown, the LCD display **132** typically includes various layers including a fluorescent panel, polarizing filters, a layer of liquid crystal cells, a color filter and the like.

[**0071**] The touch screen **134** includes a transparent electrode layer **136** that is positioned over a glass member **138**. The glass member **138** may be a portion of the LCD display **132** or it may be a portion of the touch screen **134**. In either case, the glass member **138** is a relatively thick piece of clear glass that protects the display **132** from forces, which are exerted on the touch screen **134**. The thickness of the glass member **138** may for example be about 2 mm. In most cases, the electrode layer **136** is disposed on the glass member **138** using suitable transparent conductive materials and patterning techniques such as ITO and printing. Although not shown, in some cases, it may be necessary to coat the electrode layer **136** with a material of similar refractive index to improve the visual appearance of the touch screen. As should be appreciated, the gaps located between electrodes and traces do not have the same optical index as the electrodes and traces, and therefore a material may be needed to provide a more similar optical index. By way of example, index matching gels may be used.

[**0072**] The touch screen **134** also includes a protective cover sheet **140** disposed over the electrode layer **136**. The electrode layer **136** is therefore sandwiched between the glass member **138** and the protective cover sheet **140**. The protective sheet **140** serves to protect the under layers and provide a surface for allowing an object to slide thereon. The protective sheet **140** also provides an insulating layer between the object and the electrode layer **136**. The protective cover sheet **140** may be formed from any suitable clear material such as glass and plastic. The protective cover sheet **140** is suitably thin to allow for sufficient electrode coupling. By way of example, the thickness of the cover sheet **140** may be between about 0.3-0.8 mm. In addition, the protective cover sheet **140** may be treated with coatings to reduce sticktion when touching and reduce glare when viewing the underlying LCD display **132**. By way of example, a low sticktion/anti reflective coating **142** may be applied over the cover sheet **140**. Although the electrode layer **136** is typically patterned on the glass member **138**, it should be noted that in some cases it may be alternatively or additionally patterned on the protective cover sheet **140**.

[**0073**] **FIG. 9** is a top view of a transparent multipoint touch screen **150**, in accordance with another embodiment of the present invention. By way of example, the touch screen **150** may generally correspond to the touch screen of **FIGS. 2 and 4**. Unlike the touch screen shown in **FIGS. 6-8**, the touch screen of **FIG. 9** utilizes the concept of mutual capacitance rather than self capacitance. As shown, the touch screen **150** includes a two layer grid of spatially separated lines or wires **152**. In most cases, the lines **152** on each layer are parallel one another. Furthermore, although in different planes, the lines **152** on the different layers are configured to intersect or cross in order to produce capacitive sensing nodes **154**, which each represent different coordinates in the plane of the touch screen **150**. The nodes **154** are configured to receive capacitive input from an object touching the touch screen **150** in the vicinity of the node **154**. When an object is proximate the node **154**, the object steals charge thereby affecting the capacitance at the node **154**.

[**0074**] To elaborate, the lines **152** on different layers serve two different functions. One set of lines **152**A drives a current therethrough while the second set of lines **152**B senses the capacitance coupling at each of the nodes **154**. In most cases, the top layer provides the driving lines **152**A while the bottom layer provides the sensing lines **152**B. The driving lines **152**A are connected to a voltage source (not shown) that separately drives the current through each of the driving lines **152**A. That is, the stimulus is only happening over one line while all the other lines are grounded. They may be driven similarly to a raster scan. The sensing lines **152**B are connected to a capacitive sensing circuit (not shown) that continuously senses all of the sensing lines **152**B (always sensing).

[0075] When driven, the charge on the driving line **152**A capacitively couples to the intersecting sensing lines **152**B through the nodes **154** and the capacitive sensing circuit senses all of the sensing lines **152**B in parallel. Thereafter, the next driving line **152**A is driven, and the charge on the next driving line **152**A capacitively couples to the intersecting sensing lines **152**B through the nodes **154** and the capacitive sensing circuit senses all of the sensing lines **152**B in parallel. This happens sequential until all the lines **152**A have been driven. Once all the lines **152**A have been driven, the sequence starts over (continuously repeats). In most cases, the lines **152**A are sequentially driven from one side to the opposite side.

[0076] The capacitive sensing circuit typically includes one or more sensor ICs that measure the capacitance in each of the sensing lines **152**B and that reports its findings to a host controller. The sensor ICs may for example convert the analog capacitive signals to digital data and thereafter transmit the digital data over a serial bus to a host controller. Any number of sensor ICs may be used. For example, a sensor IC may be used for all lines, or multiple sensor ICs may be used for a single or group of lines. In most cases, the sensor ICs **110** report tracking signals, which are a function of both the position of the node **154** and the intensity of the capacitance at the node **154**.

[0077] The lines **152** are generally disposed on one or more optical transmissive members **156** formed from a clear material such as glass or plastic. By way of example, the lines **152** may be placed on opposing sides of the same member **156** or they may be placed on different members **156**. The lines **152** may be placed on the member **156** using any suitable patterning technique including for example, deposition, etching, printing and the like. Furthermore, the lines **152** can be made from any suitable transparent conductive material. By way of example, the lines may be formed from indium tin oxide (ITO). The driving lines **152**A are typically coupled to the voltage source through a flex circuit **158**A, and the sensing lines **152**B are typically coupled to the sensing circuit, and more particularly the sensor ICs through a flex circuit **158**B. The sensor ICs may be attached to a printed circuit board (PCB). Alternatively, the sensor ICs may be placed directly on the member **156** thereby eliminating the flex circuit **158**B.

[0078] The distribution of the lines **152** may be widely varied. For example, the lines **152** may be positioned almost anywhere in the plane of the touch screen **150**. The lines **152** may be positioned randomly or in a particular pattern about the touch screen **150**. With regards to the later, the position of the lines **152** may depend on the coordinate system used. For example, the lines **152** may be placed in rows and columns for Cartesian coordinates or concentrically and radially for polar coordinates. When using rows and columns, the rows and columns may be placed at various angles relative to one another. For example, they may be vertical, horizontal or diagonal.

[0079] Furthermore, the lines **152** may be formed from almost any shape whether rectilinear or curvilinear. The lines on each layer may be the same or different. For example, the lines may alternate between rectilinear and curvilinear. Further still, the shape of the opposing lines may have identical shapes or they may have different shapes. For example, the driving lines may have a first shape while the sensing lines may have a second shape that is different than the first shape. The geometry of the lines **152** (e.g., linewidths and spacing) may also be widely varied. The geometry of the lines within each layer may be identical or different, and further, the geometry of the lines for both layers may be identical or different. By way of example, the linewidths of the sensing lines **152**B to driving lines **152**A may have a ratio of about 2:1.

[0080] Moreover, any number of lines **152** may be used. It is generally believed that the number of lines is dependent on the desired resolution of the touch screen **150**. The number of lines within each layer may be identical or different. The number of lines is typically determined by the size of the touch screen as well as the desired pitch and linewidths of the lines **152**.

[0081] In the illustrated embodiment, the driving lines **152**A are positioned in rows and the sensing lines **152**B are positioned in columns that are perpendicular to the rows. The rows extend horizontally to the sides of the touch screen **150** and the columns extend vertically to the top and bottom of the touch screen **150**. Furthermore, the linewidths for the set of lines **152**A and **152**B are different and the pitch for set of lines **152**A and **152**B are equal to one another. In most cases, the linewidths of the sensing lines **152**B are larger than the linewidths of the driving lines **152**A. By way of example, the pitch of the driving and sensing lines **152** may be about 5 mm, the linewidths of the driving lines **152**A may be about 1.05 mm and the linewidths of the sensing lines **152**B may be about 2.10 mm. Moreover, the number of lines **152** in each layer is different. For example, there may be about 38 driving lines and about 50 sensing lines.

[0082] As mentioned above, the lines in order to form semi-transparent conductors on glass, film or plastic, may be patterned with an ITO material. This is generally accomplished by depositing an ITO layer over the substrate surface, and then by etching away portions of the ITO layer in order to form the lines. As should be appreciated, the areas with ITO tend to have lower transparency than the areas without ITO. This is generally less desirable for the user as the user can distinguish the lines from the spaces therebetween, i.e., the patterned ITO can become quite visible thereby producing a touch screen with undesirable optical properties. To further exacerbate this problem, the ITO material is typically applied in a manner that produces a relatively low resistance, and unfortunately low resistance ITO tends to be less transparent than high resistance ITO.

[0083] In order to prevent the aforementioned problem, the dead areas between the ITO may be filled with indexing matching materials. In another embodiment, rather than simply etching away all of the ITO, the dead areas (the uncovered spaces) may be subdivided into unconnected electrically floating ITO pads, i.e., the dead areas may be patterned with spatially separated pads. The pads are typically separated with a minimum trace width. Furthermore, the pads are typically made small to reduce their impact on the capacitive measurements. This technique attempts to minimize the appearance of the ITO by creating a uniform optical retarder. That is, by seeking to create a uniform sheet of ITO, it is believed that the panel will function closer to a uniform optical retarder and therefore non-uniformities in the visual appearance will be minimized. In yet another embodiment, a combination of index matching materials and unconnected floating pads may be used.

[0084] **FIG. 10** is a partial front elevation view, in cross section of a display arrangement **170**, in accordance with one embodiment of the present invention. The display arrangement **170** includes an LCD display **172** and a touch screen **174** positioned over the LCD display **170**. The touch screen may for example correspond to the touch screen shown in **FIG. 9**. The LCD display **172** may correspond to any conventional LCD display known in the art. Although not shown, the LCD display **172** typically includes various layers including a fluorescent panel, polarizing filters, a layer of liquid crystal cells, a color filter and the like.

[0085] The touch screen **174** includes a transparent sensing layer **176** that is positioned over a first glass member **178**. The sensing layer **176** includes a plurality of sensor lines **177** positioned in columns (extend in and out of the page). The first glass member **178** may be a portion of the LCD display **172** or it may be a portion of the touch screen **174**. For example, it may be the front glass of the LCD display **172** or it may be the bottom glass of the touch screen **174**. The sensor layer **176** is typically disposed on the glass member **178** using suitable transparent conductive materials and patterning techniques. In some cases, it may be necessary to coat the sensor layer **176** with material of similar refractive index to improve the visual appearance, i.e., make more uniform.

[0086] The touch screen **174** also includes a transparent driving layer **180** that is positioned over a second glass member **182**. The second glass member **182** is positioned over the first glass member **178**. The sensing layer **176** is therefore sandwiched between the first and second glass members **178** and **182**. The second glass member **182** provides an insulating layer between the driving and sensing layers **176** and **180**. The driving layer **180** includes a plurality of driving lines **181** positioned in rows (extend to the right and left of the page). The driving lines **181** are configured to intersect or cross the sensing lines **177** positioned in columns in order to form a plurality of capacitive coupling nodes **182**. Like the sensing layer **176**, the driving layer **180** is disposed on the glass member using suitable materials and patterning techniques. Furthermore, in some cases, it may be necessary to coat the driving layer **180** with material of similar refractive index to improve the visual appearance. Although the sensing layer is typically patterned on the first glass member, it should be noted that in some cases it may be alternatively or additionally patterned on the second glass member.

[0087] The touch screen **174** also includes a protective cover sheet **190** disposed over the driving layer **180**. The driving layer **180** is therefore sandwiched between the second glass member **182** and the protective cover sheet **190**. The protective cover sheet **190** serves to protect the under layers and provide a surface for allowing an object to slide thereon. The protective cover sheet **190** also provides an insulating layer between the object and the driving layer **180**. The protective cover sheet is suitably thin to allow for sufficient coupling. The protective cover sheet **190** may be formed from any suitable clear material such as glass and plastic. In addition, the protective cover sheet **190** may be treated with coatings to reduce sticktion when touching and reduce glare when viewing the underlying LCD display **172**. By way of example, a low sticktion/anti reflective coating may be applied over the cover sheet **190**. Although the line layer is typically patterned on a glass member, it should be noted that in some cases it may be alternatively or additionally patterned on the protective cover sheet.

[0088] The touch screen **174** also includes various bonding layers **192**. The bonding layers **192** bond the glass members **178** and **182** as well as the protective cover sheet **190** together to form the laminated structure and to provide rigidity and stiffness to the laminated structure. In essence, the bonding layers **192** help to produce a monolithic sheet that is stronger than each of the individual layers taken alone. In most cases, the first and second glass members **178** and **182** as well as the second glass member and the protective sheet **182** and **190** are laminated together using a bonding agent such as glue. The compliant nature of the glue may be used to absorb geometric variations so as to form a singular composite structure with an overall geometry that is desirable. In some cases, the bonding agent includes an index matching material to improve the visual appearance of the touch screen **170**.

[0089] With regards to configuration, each of the various layers may be formed with various sizes, shapes, and the like. For example, each of the layers may have the same thickness or a different thickness than the other layers in the structure. In the illustrated embodiment, the first glass member **178** has a thickness of about 1.1 mm, the second glass member **182** has a thickness of about 0.4 mm and the protective sheet has a thickness of about 0.55 mm. The thickness of the bonding layers **192** typically varies in order to produce a laminated structure with a desired height. Furthermore, each of the layers may be formed with various materials. By way of example, each particular type of layer may be formed from the same or different material. For example, any suitable glass or plastic material may be used for the glass members. In a similar manner, any suitable bonding agent may be used for the bonding layers **192**.

[0090] **FIGS. 11A and 11B** are partial top view diagrams of a driving layer **200** and a sensing layer **202**, in accordance with one embodiment. In this embodiment, each of the layers **200** and **202** includes dummy features **204** disposed between the driving lines **206** and the sensing lines **208**. The dummy features **204** are configured to optically improve the visual appearance of the touch screen by more closely matching the optical index of the lines. While index matching materials may improve the visual appearance, it has been found that there still may exist some non-uniformities. The dummy features **204** provide the touch screen with a more uniform appearance. The dummy features **204** are electrically isolated and positioned in the gaps between each of the lines **206** and **208**. Although they may be patterned separately, the dummy features **204** are typically patterned along with the lines **206** and **208**. Furthermore, although they may be formed from different materials, the dummy features **204** are typically formed with the same transparent conductive material as the lines as for example ITO to provide the best possible index matching. As should be appreciated, the dummy features will more than likely still produce some gaps, but these gaps are much smaller than the gaps found between the lines (many orders of magnitude smaller). These gaps, therefore have minimal impact on the visual appearance. While this may be the case, index matching materials may be additionally applied to the gaps between the dummy features to further improve the visual appearance

of the touch screen. The distribution, size, number, dimension, and shape of the dummy features may be widely varied.

[0091] **FIG. 12** is a simplified diagram of a mutual capacitance circuit **220**, in accordance with one embodiment of the present invention. The mutual capacitance circuit **220** includes a driving line **222** and a sensing line **224** that are spatially separated thereby forming a capacitive coupling node **226**. The driving line **222** is electrically coupled to a voltage source **228**, and the sensing line **224** is electrically coupled to a capacitive sensing circuit **230**. The driving line **222** is configured to carry a current to the capacitive coupling node **226**, and the sensing line **224** is configured to carry a current to the capacitive sensing circuit **230**. When no object is present, the capacitive coupling at the node **226** stays fairly constant. When an object **232** such as a finger is placed proximate the node **226**, the capacitive coupling changes through the node **226** changes. The object **232** effectively shunts some of the field away so that the charge projected across the node **226** is less. The change in capacitive coupling changes the current that is carried by the sensing lines **224**. The capacitive sensing circuit **230** notes the current change and the position of the node **226** where the current change occurred and reports this information in a raw or in some processed form to a host controller. The capacitive sensing circuit does this for each node **226** at about the same time (as viewed by a user) so as to provide multipoint sensing.

[0092] The sensing line **224** may contain a filter **236** for eliminating parasitic capacitance **237**, which may for example be created by the large surface area of the row and column lines relative to the other lines and the system enclosure at ground potential. Generally speaking, the filter rejects stray capacitance effects so that a clean representation of the charge transferred across the node **226** is outputted (and not anything in addition to that). That is, the filter **236** produces an output that is not dependent on the parasitic capacitance, but rather on the capacitance at the node **226**. As a result, a more accurate output is produced.

[0093] **FIG. 13** is a diagram of an inverting amplifier **240**, in accordance with one embodiment of the present invention. The inverting amplifier **240** may generally correspond to the filter **236** shown in **FIG. 12**. As shown, the inverting amplifier includes a non inverting input that is held at a constant voltage (in this case ground), an inverting input that is coupled to the node and an output that is coupled to the capcitive sensing circuit **230**. The output is coupled back to the inverting input through a capacitor. During operation, the input from the node may be disturbed by stray capacitance effects, i.e., parasitic capaciatnce. If so, the inverting amplifier is configured to drive the input back to the same voltage that it had been previously before the stimulus. As such, the value of the paraisitc capciatanec doesn't matter.

[0094] **FIG. 14** is a block diagram of a capacitive sensing circuit **260**, in accordance with one embodiment of the present invention. The capacitive sensing circuit **260** may for example correspond to the capacitive sensing circuits described in the previous figures. The capacitive sensing circuit **260** is configured to receive input data from a plurality of sensing points **262** (electrode, nodes, etc.), to process the data and to output processed data to a host controller.

[0095] The sensing circuit **260** includes a multiplexer **264** (MUX). The multiplexer **264** is a switch configured to perform time multiplexing. As shown, the MUX **264** includes a plurality of independent input channels **266** for receiving signals from each of the sensing points **262** at the same time. The MUX **264** stores all of the incoming signals at the same time, but sequentially releases them one at a time through an output channel **268**.

[0096] The sensing circuit **260** also includes an analog to digital converter **270** (ADC) operatively coupled to the MUX **264** through the output channel **268**. The ADC **270** is configured to digitize the incoming analog signals sequentially one at a time. That is, the ADC **270** converts each of the incoming analog signals into outgoing digital signals. The input to the ADC **270** generally corresponds to a voltage having a theoretically infinite number of values. The voltage varies according to the amount of capacitive coupling at each of the sensing points **262**. The output to the ADC **270**, on the other hand, has a defined number of states. The states generally have predictable exact voltages or currents.

[0097] The sensing circuit **260** also includes a digital signal processor **272** (DSP) operatively coupled to the ADC **270** through another channel **274**. The DSP **272** is a programmable computer processing unit that works to clarify or standardize the digital signals via high speed mathematical processing. The DSP **274** is capable of differentiating between human made signals, which have order, and noise, which is inherently chaotic. In most cases, the DSP performs filtering and conversion algorithms using the raw data. By way of example, the DSP may filter noise events from the raw data, calculate the touch boundaries for each touch that occurs on the touch screen at the same time, and thereafter determine the coordinates for each touch event. The coordinates of the touch events may then be reported to a host controller where they can be compared to previous coordinates of the touch events to determine what action to perform in the host device.

[0098] **FIG. 15** is a flow diagram **280**, in accordance with one embodiment of the present invention. The method generally begins at block **282** where a plurality of sensing points are driven. For example, a voltage is applied to the electrodes in self capacitance touch screens or through driving lines in mutual capacitance touch screens. In the later, each driving line is driven separately. That is, the driving lines are driven one at a time thereby building up charge on all the intersecting sensing lines. Following block **282**, the process flow proceeds to block **284** where the outputs (voltage) from all the sensing points are read. This block may include multiplexing and digitizing the outputs. For example, in mutual capacitance touch screens, all the sensing points on one row are multiplexed and digitized and this is repeated until all the rows have been sampled. Following block **284**, the process flow proceeds to block **286** where an image or other form of data (signal or signals) of the touch screen plane at one moment in time can be produced and thereafter analyzed to determine where the objects are touching the touch screen. By way of example, the boundaries for each unique touch can be calculated, and thereafter the coordinates thereof can be found. Following block **286**, the process flow proceeds to block **288** where the current image or signal is compared to a past image or signal in order to determine a change in pressure, location, direction, speed and acceleration for each object on the plane of

the touch screen. This information can be subsequently used to perform an action as for example moving a pointer or cursor or making a selection as indicated in block **290**.

[**0099**] **FIG. 16** is a flow diagram of a digital signal processing method **300**, in accordance with one embodiment of the present invention. By way of example, the method may generally correspond to block **286** shown and described in **FIG. 15**. The method **300** generally begins at block **302** where the raw data is received. The raw data is typically in a digitized form, and includes values for each node of the touch screen. The values may be between 0 and 256 where 0 equates to the highest capacitive coupling (no touch pressure) and **256** equates to the least capacitive coupling (full touch pressure). An example of raw data at one point in time is shown in **FIG. 17A**. As shown in **FIG. 17A**, the values for each point are provided in gray scale where points with the least capacitive coupling are shown in white and the points with the highest capacitive coupling are shown in black and the points found between the least and the highest capacitive coupling are shown in gray.

[**0100**] Following block **302**, the process flow proceeds to block **304** where the raw data is filtered. As should be appreciated, the raw data typically includes some noise. The filtering process is configured to reduce the noise. By way of example, a noise algorithm may be run that removes points that aren't connected to other points. Single or unconnected points generally indicate noise while multiple connected points generally indicate one or more touch regions, which are regions of the touch screen that are touched by objects. An example of a filtered data is shown in **FIG. 17**B. As shown, the single scattered points have been removed thereby leaving several concentrated areas.

[**0101**] Following block **304**, the process flow proceeds to block **306** where gradient data is generated. The gradient data indicates the topology of each group of connected points. The topology is typically based on the capacitive values for each point. Points with the lowest values are steep while points with the highest values are shallow. As should be appreciated, steep points indicate touch points that occurred with greater pressure while shallow points indicate touch points that occurred with lower pressure. An example of gradient data is shown in **FIG. 17C**.

[**0102**] Following block **306**, the process flow proceeds to block **308** where the boundaries for touch regions are calculated based on the gradient data. In general, a determination is made as to which points are grouped together to form each touch region. An example of the touch regions is shown in **FIG. 17D**.

[**0103**] In one embodiment, the boundaries are determined using a watershed algorithm. Generally speaking, the algorithm performs image segmentation, which is the partitioning of an image into distinct regions as for example the touch regions of multiple objects in contact with the touchscreen. The concept of watershed initially comes from the area of geograpgy and more particularly topography where a drop of water falling on a relief follows a descending path and eventually reaches a minimum, and where the watersheds are the divide lines of the domains of attracting drops of water. Herein, the watershed lines represent the location of pixels, which best separate different objects touching the touch screen. Watershed algorithms can be widely varied. In one particular implementation, the watershed algorithm includes forming paths from low points to a peak (based on the magnitude of each point), classifying the peak as an ID label for a particular touch region, associating each point (pixel) on the path with the peak. These steps are performed over the entire image map thus carving out the touch regions associated with each object in contact with the touchscreen.

[**0104**] Following block **308**, the process flow proceeds to block **310** where the coordinates for each of the touch regions are calculated. This may be accomplished by performing a centroid calculation with the raw data associated with each touch region. For example, once the touch regions are determined, the raw data associated therewith may be used to calculate the centroid of the touch region. The centroid may indicate the central coordinate of the touch region. By way of example, the X and Y centroids may be found using the following equations:

$$Xc=\Sigma Z^{*}x/\Sigma Z; \text{ and}$$

$$Yc=\Sigma Z^{*}y/\Sigma Z,$$

[**0105**] where Xc represents the x centroid of the touch region

[**0106**] Yc represents the y centroid of the touch region

[**0107**] x represents the x coordinate of each pixel or point in the touch region

[**0108**] y represents the y coordinate of each pixel or point in the touch region

[**0109**] Z represents the magnitude (capacitance value) at each pixel or point

[**0110**] An example of a centroid calculation for the touch regions is shown in **FIG. 17E**. As shown, each touch region represents a distinct x and y coordinate. These coordinates may be used to perform multipoint tracking as indicated in block **312**. For example, the coordinates for each of the touch regions may be compared with previous coordinates of the touch regions to determine positioning changes of the objects touching the touch screen or whether or not touching objects have been added or subtracted or whether a particular object is being tapped.

[**0111**] **FIGS. 18 and 19** are side elevation views of an electronic device **350**, in accordance with multiple embodiments of the present invention. The electronic device **350** includes an LCD display **352** and a transparent touch screen **354** positioned over the LCD display **352**. The touch screen **354** includes a protective sheet **356**, one or more sensing layers **358**, and a bottom glass member **360**. In this embodiment, the bottom glass member **360** is the front glass of the LCD display **352**. Further, the sensing layers **358** may be configured for either self or mutual capacitance as described above. The sensing layers **358** generally include a plurality of interconnects at the edge of the touch screen for coupling the sensing layer **358** to a sensing circuit (not shown). By way of example, the sensing layer **358** may be electrically coupled to the sensing circuit through one or more flex circuits **362**, which are attached to the sides of the touch screen **354**.

[**0112**] As shown, the LCD display **352** and touch screen **354** are disposed within a housing **364**. The housing **364** serves to cover and support these components in their assembled position within the electronic device **350**. The housing **364** provides a space for placing the LCD display

352 and touch screen **354** as well as an opening **366** so that the display screen can be seen through the housing **364**. In one embodiment, as shown in **FIG. 18**, the housing **364** includes a facade **370** for covering the sides the LCD display **352** and touch screen **354**. Although not shown in great detail, the facade **370** is positioned around the entire perimeter of the LCD display **352** and touch screen **354**. The facade **370** serves to hide the interconnects leaving only the active area of the LCD display **352** and touch screen **354** in view.

[**0113**] In another embodiment, as shown in **FIG. 19**, the housing **364** does not include a facade **370**, but rather a mask **372** that is printed on interior portion of the top glass **374** of the touch screen **354** that extends between the sides of the housing **364**. This particular arrangement makes the mask **372** look submerged in the top glass **356**. The mask **372** serves the same function as the facade **370**, but is a more elegant solution. In one implementation, the mask **372** is a formed from high temperature black polymer. In the illustrated embodiment of **FIG. 19**, the touch screen **354** is based on mutual capacitance sensing and thus the sensing layer **358** includes driving lines **376** and sensing lines **378**. The driving lines **376** are disposed on the top glass **356** and the mask **372**, and the sensing lines **378** are disposed on the bottom glass **360**. The driving lines and sensing lines **376** and **378** are insulated from one another via a spacer **380**. The spacer **380** may for example be a clear piece of plastic with optical matching materials retained therein or applied thereto.

[**0114**] In one embodiment and referring to both **FIGS. 18 and 19**, the electronic device **350** corresponds to a tablet computer. In this embodiment, the housing **364** also encloses various integrated circuit chips and other circuitry **382** that provide computing operations for the tablet computer. By way of example, the integrated circuit chips and other circuitry may include a microprocessor, motherboard, Read-Only Memory (ROM), Random-Access Memory (RAM), a hard drive, a disk drive, a battery, and various input/output support devices.

[**0115**] While this invention has been described in terms of several preferred embodiments, there are alterations, permutations, and equivalents, which fall within the scope of this invention. For example, although the touch screen was primarily directed at capacitive sensing, it should be noted that some or all of the features described herein may be applied to other sensing methodologies. It should also be noted that there are many alternative ways of implementing the methods and apparatuses of the present invention. It is therefore intended that the following appended claims be interpreted as including all such alterations, permutations, and equivalents as fall within the true spirit and scope of the present invention.

What is claimed is:

1. A touch panel having a transparent capacitive sensing medium configured to detect multiple touches or near touches that occur at the same time and at distinct locations in the plane of the touch panel and to produce distinct signals representative of the location of the touches on the plane of the touch panel for each of the multiple touches.

2. The touch panel as recited in claim 1 wherein the transparent sensing medium includes a pixilated array of transparent capacitance sensing nodes.

3. The touch panel as recited in claim 1 wherein the transparent capacitive sensing medium comprises:

a transparent electrode layer, the electrode layer including a plurality of electrically isolated electrodes and electrode traces formed from a transparent conductive material, each of the electrodes being placed at different locations in the plane of the touch panel, each of the electrodes having an individual trace for operatively coupling to capacitive monitoring circuitry.

4. The touch panel as recited in claim 3 further including one or more integrated circuits for monitoring the capacitance at each of the electrodes, the integrated circuits being operatively coupled to the electrodes via the traces.

5. The touch panel as recited in claim 3 wherein the electrodes are placed in rows and columns.

6. The touch panel as recited in claim 3 wherein the electrodes and traces are formed from indium tin oxide (ITO).

7. The touch panel as recited in claim 1 wherein the transparent capacitive sensing medium comprises:

a first layer having a plurality of transparent conductive lines that are electrically isolated from one another; and

a second layer spatially separated from the first layer and having a plurality of transparent conductive lines that are electrically isolated from one another, the second conductive lines being positioned transverse to the first conductive lines, the intersection of transverse lines being positioned at different locations in the plane of the touch panel, each of the conductive lines being operatively coupled to capacitive monitoring circuitry.

8. The touch panel as recited in claim 7 wherein the conductive lines on each of the layers are substantially parallel to one another.

9. The touch panel as recited in claim 8 wherein the conductive lines on different layers are substantially perpendicular to one another.

10. The touch panel as recited in claim 7 wherein the transparent conductive lines of the first layer are disposed on a first glass member, and wherein the transparent conductive lines of the second layer are disposed on a second glass member, the first glass member being disposed over the second glass member.

11. The touch panel as recited in claim 10 further including a third glass member disposed over the first glass member, the first and second glass members being attached to one another via an adhesive layer, the third glass member being attached to the first glass member via another adhesive layer.

12. The touch panel as recited in claim 7 wherein the conductive lines are formed from indium tin oxide (ITO).

13. A display arrangement comprising:

a display having a screen for displaying a graphical user interface;

a transparent touch panel allowing the screen to be viewed therethrough and capable of recognizing multiple touch events that occur at different locations on the touch sensitive surface of the touch screen at the same time and to output this information to a host device.

14. The display arrangement as recited in claim 13 wherein the touch screen includes a multipoint sensing arrangement configured to simultaneously detect and moni-

tor touches and the magnitude of those touches at distinct points across the touch sensitive surface of the touch screen.

15. The display arrangement as recited in claim 14 wherein the multipoint sensing arrangement provides a plurality of transparent capacitive sensing nodes that work independent of one another and that represent different points on the touch screen.

16. The display arrangement as recited in claim 15 wherein the capacitive sensing nodes are formed with a transparent conductive medium.

17. The display arrangement as recited in claim 16 wherein the transparent conductive medium corresponds to indium tin oxide (ITO).

18. The display arrangement as recited in claim 16 wherein the capacitive sensing nodes are based on self capacitance.

19. The display arrangement as recited in claim 18 wherein the transparent conductive medium is patterned into electrically isolated electrodes and traces, each electrode representing a different coordinate in the plane of the touch screen, and the traces connecting the electrodes to a capacitive sensing circuit.

20. The display arrangement as recited in claim 16 wherein the capacitive sensing nodes are based on mutual capacitance.

21. The display arrangement as recited in claim 18 wherein the transparent conductive medium is patterned into a group of spatially separated lines formed on two different layers, driving lines are formed on a first layer and sensing lines are formed on a second layer, the sensing lines being configured to traverse across the driving lines in order to form a capacitive sensing node, the driving lines being connected to a voltage source and the sensing lines being connected to a capacitive sensing circuit, the voltage source driving a current through one driving line at a time and because of capacitive coupling, the current is carried through to the sensing lines at each of the capacitive sensing nodes.

22. The display arrangement as recited in claim 16 wherein the capacitive sensing nodes are coupled to a capacitive sensing circuit, and wherein the capacitive sensing circuit monitors changes in capacitance that occurs at each of the capacitive sensing nodes, the position where changes occur and the magnitude of those changes being used to help recognize the multiple touch events.

23. The display arrangement as recited in claim 22 wherein the capacitive sensing circuit comprises:

a multiplexer that receives signals from each of the capacitive sensing nodes at the same time, stores all the signals and sequentially releases the signals one at a time through an output channel;

an analog to digital converter operatively coupled to the MUX through the output channel, the analog to digital converter being configured to convert the incoming analog signals into outgoing digital signals;

a digital signal processor operatively coupled to the analog to digital converter, the DSP filtering noise events from the raw data, calculating the touch boundaries for each touch that occurs on the touch screen at the same time and thereafter determining the coordinates for each touch.

24. The display arrangement as recited in claim 13 wherein the touch panel comprises:

a glass member disposed over the screen of the display;

a transparent conductive layer disposed over the glass member, the conductive layer including a pixilated array of electrically isolated electrodes;

a transparent cover sheet disposed over the electrode layer; and

one or more sensor integrated circuits operatively coupled to the electrodes.

25. The display arrangement as recited in claim 13 wherein the touch panel comprises:

a first glass member disposed over the screen of the display;

a first transparent conductive layer disposed over the first glass member, the first transparent conductive layer comprising a plurality of spaced apart parallel lines having the same pitch and linewidths;

a second glass member disposed over the first transparent conductive layer;

a second transparent conductive layer disposed over the second glass member, the second transparent conductive layer comprising a plurality of spaced apart parallel lines having the same pitch and linewidths, the parallel lines of the second transparent conductive layer being substantially perpendicular to the parallel lines of the first transparent conductive layer;

a third glass member disposed over the second transparent conductive layer; and

one or more sensor integrated circuits operatively coupled to the lines.

26. The display arrangement as recited in claim 25 further including dummy features disposed in the space between the parallel lines, the dummy features optically improving the visual appearance of the touch screen by more closely matching the optical index of the lines.

27. A computer readable medium including at least computer code executable by a computer, the computer code comprising:

receiving multiple touches on the surface of a transparent touch screen at the same time;

separately recognizing each of the multiple touches; and

reporting touch data based on the recognized multiple touches.

28. A computer system comprising:

a processor configured to execute instructions and to carry out operations associated with the computer system;

a display device that is operatively coupled to the processor;

a touch screen that is operatively coupled to the processor, the touch screen being a substantially transparent panel that is positioned in front of the display, the touch screen being configured to track multiple objects, which rest on, tap on or move across the touch screen at the same time, the touch screen including a capacitive sensing device that is divided into several independent and spatially distinct sensing points that are positioned throughout the plane of the touch screen, each sensing point being capable of generating a signal

at the same time, the touch screen also including a sensing circuit that acquires data from the sensing device and that supplies the acquired data to the processor.

29. A touch screen method comprising:

driving a plurality of sensing points;

reading the outputs from all the sensing lines connected to the sensing points;

producing and analyzing an image of the touch screen plane at one moment in time in order to determine where objects are touching the touch screen; and

comparing the current image to a past image in order to determine a change at the objects touching the touch screen.

30. A digital signal processing method, comprising:

receiving raw data, the raw data including values for each transparent capacitive sensing node of a touch screen;

filtering the raw data;

generating gradient data;

calculating the boundaries for touch regions base on the gradient data; and

calculating the coordinates for each touch region.

31. The method as recited in claim 30 wherein the boundaries are calculated using a watershed algorithm.

* * * * *