UNITED STATES PATENT AND TRADEMARK OFFICE

CERTIFICATE OF CORRECTION

PATENT NO. : 9,877,037 B2
APPLICATION NO. : 15/490469
DATED : January 23, 2018
INVENTOR(S) : Ugur et al.

It is certified that error appears in the above-identified patent and that said Letters Patent is hereby corrected as shown below:

On the Title Page

Item (72) Inventors: "Tampere, FL (US)", each occurrence, should read --Tampere (FI)--.

Signed and Sealed this
Twenty-sixth Day of June, 2018

Andrei Iancu
Director of the United States Patent and Trademark Office

UNITED STATES PATENT AND TRADEMARK OFFICE

UNITED STATES DEPARTMENT OF COMMERCE
United States Patent and Trademark Office
Address: COMMISSIONER FOR PATENTS
P.O. Box 1450
Alexandria, Virginia 22313-1450
www.uspto.gov

APPLICATION NUMBER	PATENT NUMBER	GROUP ART UNIT	REQUEST ID
15/490,469	9877037	2488	66184

PAIR Correspondence Address/Fee Address Change

The following fields have been changed to Customer Number 00197 on 06/19/2018 via Private PAIR in view of the certification copied below that authorized the change.

- Maintenance Fee Address

The address for Customer Number 00197 is:
00197
CPA GLOBAL LIMITED
2318 Mill Road 12th Floor
ALEXANDRIA, VA 22314

I certify, in accordance with 37 CFR 1.4(d)(4) that I am:

An attorney or Agent of Record registered to practice before the Patent and Trademark Office who has been given power of attorney in this application

Signature:	/Guy R. Gosnell/
Name:	Guy R. Gosnell
Registration Number:	34610

Attorney's Docket No. 042933/496984 PATENT

IN THE UNITED STATES PATENT AND TRADEMARK OFFICE

In re:	Kemal Ugur	Confirmation No. 5040
Appl. No.:	15/490,469	Patent No.: 9,877,037
Filed:	April 18, 2017	Issue Date: January 23, 2018
For:	MOTION PREDICTION IN VIDEO CODING	

Certificate of Correction Branch
Commissioner for Patents
P.O. Box 1450
Alexandria, VA 22313-1450

REQUEST FOR CERTIFICATE OF CORRECTION

On behalf of the Applicant and Assignee of the above-referenced patent, Nokia Technologies Oy, it is hereby requested that the Office issue a Certificate of Correction to correct the residence for all three inventors which printed incorrectly on the face of the Letters Patent.

The residence for all three inventors is listed on the face of the patent as Tampere, FL (US). However, as provided in the Application Data Sheet filed by applicant on April 18, 2017, and as shown in the Filing Receipt of April 27, 2017, the residence for all three inventors is Tampere (FI).

Applicant respectfully requests the USPTO to issue a Certificate of Correction confirming the inventors' residence. This correction is set forth in the Certificate of Correction being filed

simultaneously herewith. Since the error was caused by the Patent Office, it is believed that no fee is required.

Respectfully submitted,

/Guy R. Gosnell/

Guy R. Gosnell
Registration No. 34,610

ALSTON & BIRD LLP
Bank of America Plaza
101 South Tryon Street, Suite 4000
Charlotte, NC 28280-4000
Tel Charlotte Office (704) 444-1000
Fax Charlotte Office (704) 444-1111
LEGAL02/38114272v1

UNITED STATES PATENT AND TRADEMARK OFFICE
CERTIFICATE OF CORRECTION

PATENT NO. : 9,877,037 B2

APPLICATION NO. : 15/490,469

ISSUE DATE : January 23, 2018

INVENTOR(S) : Ugur et al.

It is certified that an error appears or errors appear in the above-identified patent and that said Letters Patent is hereby corrected as shown below:

On the Title Page:

Item (72) Inventors: "Tampere, FL (US)", each occurrence, should read --Tampere (FI)--.

MAILING ADDRESS OF SENDER

ALSTON & BIRD LLP
Bank of America Plaza
101 South Tryon Street, Suite 4000
Charlotte, NC 28280-4000
Tel Charlotte Office (704) 444-1000

Electronic Acknowledgement Receipt

EFS ID:	32695069
Application Number:	15490469
International Application Number:	
Confirmation Number:	5040
Title of Invention:	MOTION PREDICTION IN VIDEO CODING
First Named Inventor/Applicant Name:	Kemal UGUR
Customer Number:	10949
Filer:	Guy Randall Gosnell/Marigrace Faulkner
Filer Authorized By:	Guy Randall Gosnell
Attorney Docket Number:	042933/496984
Receipt Date:	22-MAY-2018
Filing Date:	18-APR-2017
Time Stamp:	17:00:26
Application Type:	Utility under 35 USC 111(a)

Payment information:

Submitted with Payment	no

File Listing:

Document Number	Document Description	File Name	File Size(Bytes)/ Message Digest	Multi Part /.zip	Pages (if appl.)
1	Request for Certificate of Correction	coc496984.PDF	53952 f5fe970f55ea2785453f318ea9e7da6a56c5c6fc	no	3

Warnings:

Information:	
Total Files Size (in bytes):	53952

This Acknowledgement Receipt evidences receipt on the noted date by the USPTO of the indicated documents, characterized by the applicant, and including page counts, where applicable. It serves as evidence of receipt similar to a Post Card, as described in MPEP 503.

New Applications Under 35 U.S.C. 111
If a new application is being filed and the application includes the necessary components for a filing date (see 37 CFR 1.53(b)-(d) and MPEP 506), a Filing Receipt (37 CFR 1.54) will be issued in due course and the date shown on this Acknowledgement Receipt will establish the filing date of the application.
National Stage of an International Application under 35 U.S.C. 371
If a timely submission to enter the national stage of an international application is compliant with the conditions of 35 U.S.C. 371 and other applicable requirements a Form PCT/DO/EO/903 indicating acceptance of the application as a national stage submission under 35 U.S.C. 371 will be issued in addition to the Filing Receipt, in due course.
New International Application Filed with the USPTO as a Receiving Office
If a new international application is being filed and the international application includes the necessary components for an international filing date (see PCT Article 11 and MPEP 1810), a Notification of the International Application Number and of the International Filing Date (Form PCT/RO/105) will be issued in due course, subject to prescriptions concerning national security, and the date shown on this Acknowledgement Receipt will establish the international filing date of the application.

UNITED STATES PATENT AND TRADEMARK OFFICE

UNITED STATES DEPARTMENT OF COMMERCE
United States Patent and Trademark Office
Address: COMMISSIONER FOR PATENTS
P.O. Box 1450
Alexandria, Virginia 22313-1450
www.uspto.gov

APPLICATION NO.	ISSUE DATE	PATENT NO.	ATTORNEY DOCKET NO.	CONFIRMATION NO.
15/490,469	01/23/2018	9877037	042933/496984	5040

10949 7590 01/03/2018

Nokia Corporation and Alston & Bird LLP
c/o Alston & Bird LLP
Bank of America Plaza, 101 South Tryon Street
Suite 4000
Charlotte, NC 28280-4000

ISSUE NOTIFICATION

The projected patent number and issue date are specified above.

Determination of Patent Term Adjustment under 35 U.S.C. 154 (b)
(application filed on or after May 29, 2000)

The Patent Term Adjustment is 0 day(s). Any patent to issue from the above-identified application will include an indication of the adjustment on the front page.

If a Continued Prosecution Application (CPA) was filed in the above-identified application, the filing date that determines Patent Term Adjustment is the filing date of the most recent CPA.

Applicant will be able to obtain more detailed information by accessing the Patent Application Information Retrieval (PAIR) WEB site (http://pair.uspto.gov).

Any questions regarding the Patent Term Extension or Adjustment determination should be directed to the Office of Patent Legal Administration at (571)-272-7702. Questions relating to issue and publication fee payments should be directed to the Application Assistance Unit (AAU) of the Office of Data Management (ODM) at (571)-272-4200.

APPLICANT(s) (Please see PAIR WEB site http://pair.uspto.gov for additional applicants):

Kemal UGUR, Tampere, FINLAND;
Nokia Technologies Oy, Espoo, FINLAND;
Jani LAINEMA, Tampere, FINLAND;
Antti HALLAPURO, Tampere, FINLAND;

The United States represents the largest, most dynamic marketplace in the world and is an unparalleled location for business investment, innovation, and commercialization of new technologies. The USA offers tremendous resources and advantages for those who invest and manufacture goods here. Through SelectUSA, our nation works to encourage and facilitate business investment. To learn more about why the USA is the best country in the world to develop technology, manufacture products, and grow your business, visit SelectUSA.gov.

PART B - FEE(S) TRANSMITTAL

Complete and send this form, together with applicable fee(s), to: Mail **Mail Stop ISSUE FEE**
Commissioner for Patents
P.O. Box 1450
Alexandria, Virginia 22313-1450
or Fax (571)-273-2885

INSTRUCTIONS: This form should be used for transmitting the ISSUE FEE and PUBLICATION FEE (if required). Blocks 1 through 5 should be completed where appropriate. All further correspondence including the Patent, advance orders and notification of maintenance fees will be mailed to the current correspondence address as indicated unless corrected below or directed otherwise in Block 1, by (a) specifying a new correspondence address; and/or (b) indicating a separate "FEE ADDRESS" for maintenance fee notifications.

CURRENT CORRESPONDENCE ADDRESS (Note: Use Block 1 for any change of address)

10949 7590 09/15/2017
Nokia Corporation and Alston & Bird LLP
c/o Alston & Bird LLP
Bank of America Plaza, 101 South Tryon Street
Suite 4000
Charlotte, NC 28280-4000

Note: A certificate of mailing can only be used for domestic mailings of the Fee(s) Transmittal. This certificate cannot be used for any other accompanying papers. Each additional paper, such as an assignment or formal drawing, must have its own certificate of mailing or transmission.

Certificate of Mailing or Transmission
I hereby certify that this Fee(s) Transmittal is being deposited with the United States Postal Service with sufficient postage for first class mail in an envelope addressed to the Mail Stop ISSUE FEE address above, or being facsimile transmitted to the USPTO (571) 273-2885, on the date indicated below.

(Depositor's name)
(Signature)
(Date)

APPLICATION NO.	FILING DATE	FIRST NAMED INVENTOR	ATTORNEY DOCKET NO.	CONFIRMATION NO.
15/490,469	04/18/2017	Kemal UGUR	042933/496984	5040

TITLE OF INVENTION: MOTION PREDICTION IN VIDEO CODING

APPLN. TYPE	ENTITY STATUS	ISSUE FEE DUE	PUBLICATION FEE DUE	PREV. PAID ISSUE FEE	TOTAL FEE(S) DUE	DATE DUE
nonprovisional	UNDISCOUNTED	$960	$0	$0	$960	12/15/2017

EXAMINER	ART UNIT	CLASS-SUBCLASS
LE, PETER D	2488	375-240150

1. Change of correspondence address or indication of "Fee Address" (37 CFR 1.363).
- ☐ Change of correspondence address (or Change of Correspondence Address form PTO/SB/122) attached.
- ☐ "Fee Address" indication (or "Fee Address" Indication form PTO/SB/47; Rev 03-02 or more recent) attached. **Use of a Customer Number is required.**

2. For printing on the patent front page, list
(1) The names of up to 3 registered patent attorneys or agents OR, alternatively,
(2) The name of a single firm (having as a member a registered attorney or agent) and the names of up to 2 registered patent attorneys or agents. If no name is listed, no name will be printed.

1 Alston & Bird LLP
2
3

3. ASSIGNEE NAME AND RESIDENCE DATA TO BE PRINTED ON THE PATENT (print or type)

PLEASE NOTE: Unless an assignee is identified below, no assignee data will appear on the patent. If an assignee is identified below, the document has been filed for recordation as set forth in 37 CFR 3.11. Completion of this form is NOT a substitute for filing an assignment.

(A) NAME OF ASSIGNEE: Nokia Technologies Oy
(B) RESIDENCE: (CITY and STATE OR COUNTRY): Espoo, Finland

Please check the appropriate assignee category or categories (will not be printed on the patent) : ☐ Individual ☒ Corporation or other private group entity ☐ Government

4a. The following fee(s) are submitted:
- ☒ Issue Fee
- ☐ Publication Fee (No small entity discount permitted)
- ☐ Advance Order - # of Copies _____

4b. Payment of Fee(s): **(Please first reapply any previously paid issue fee shown above)**
- ☐ A check is enclosed.
- ☐ Payment by credit card. Form PTO-2038 is attached.
- ☒ The director is hereby authorized to charge the required fee(s), any deficiency, or credits any overpayment, to Deposit Account Number 16-0605 (enclose an extra copy of this form).

5. **Change in Entity Status** (from status indicated above)
- ☐ Applicant certifying micro entity status. See 37 CFR 1.29 — NOTE: Absent a valid certification of Micro Entity Status (see forms PTO/SB/15A and 15B), issue fee payment in the micro entity amount will not be accepted at the risk of application abandonment.
- ☐ Applicant asserting small entity status. See 37 CFR 1.27 — NOTE: If the application was previously under micro entity status, checking this box will be taken to be a notification of loss of entitlement to micro entity status.
- ☐ Applicant changing to regular undiscounted fee status. — NOTE: Checking this box will be taken to be a notification of loss of entitlement to small or micro entity status, as applicable.

NOTE: This form must be signed in accordance with 37 CFR 1.31 and 1.33. See 37 CFR 1.4 for signature requirements and certifications.

Authorized Signature ***/Guy R. Gosnell/*** Date December 15, 2017
Typed or printed name Guy R. Gosnell Registration No. 34,610

PTOL-85 Part B (10-13) Approved for use through 10/31/2013. OMB 0651-0033 U.S. Patent and Trademark Office; U.S. DEPARTMENT OF COMMERCE

Nokia Exhibit 2013, p.9
ASUS v. Nokia
IPR2025-01154

Electronic Patent Application Fee Transmittal

Application Number:	15490469
Filing Date:	18-Apr-2017
Title of Invention:	MOTION PREDICTION IN VIDEO CODING
First Named Inventor/Applicant Name:	Kemal UGUR
Filer:	Guy Randall Gosnell/Lisa Rone
Attorney Docket Number:	042933/496984

Filed as Large Entity

Filing Fees for Utility under 35 USC 111(a)

Description	Fee Code	Quantity	Amount	Sub-Total in USD($)
Basic Filing:				
Pages:				
Claims:				
Miscellaneous-Filing:				
Petition:				
Patent-Appeals-and-Interference:				
Post-Allowance-and-Post-Issuance:				
UTILITY APPL ISSUE FEE	1501	1	960	960

Description	Fee Code	Quantity	Amount	Sub-Total in USD($)
Extension-of-Time:				
Miscellaneous:				
		Total in USD ($)		**960**

Electronic Acknowledgement Receipt	
EFS ID:	31238631
Application Number:	15490469
International Application Number:	
Confirmation Number:	5040
Title of Invention:	MOTION PREDICTION IN VIDEO CODING
First Named Inventor/Applicant Name:	Kemal UGUR
Customer Number:	10949
Filer:	Guy Randall Gosnell/Lisa Rone
Filer Authorized By:	Guy Randall Gosnell
Attorney Docket Number:	042933/496984
Receipt Date:	15-DEC-2017
Filing Date:	18-APR-2017
Time Stamp:	11:03:37
Application Type:	Utility under 35 USC 111(a)

Payment information:

Submitted with Payment	yes
Payment Type	DA
Payment was successfully received in RAM	$960
RAM confirmation Number	121517INTEFSW00011239160605
Deposit Account	
Authorized User	
The Director of the USPTO is hereby authorized to charge indicated fees and credit any overpayment as follows:	

File Listing:

Document Number	Document Description	File Name	File Size(Bytes)/ Message Digest	Multi Part /.zip	Pages (if appl.)
1	Issue Fee Payment (PTO-85B)	496984-IssueFee-2.pdf	141102 d5ab12642c98cd8c285da636b7a1e750e2f62956	no	1
Warnings:					
Information:					
2	Fee Worksheet (SB06)	fee-info.pdf	30510 7041abe67183d18e2132da851bd6841116d3ddaa	no	2
Warnings:					
Information:					
			Total Files Size (in bytes):	171612	

This Acknowledgement Receipt evidences receipt on the noted date by the USPTO of the indicated documents, characterized by the applicant, and including page counts, where applicable. It serves as evidence of receipt similar to a Post Card, as described in MPEP 503.

New Applications Under 35 U.S.C. 111
If a new application is being filed and the application includes the necessary components for a filing date (see 37 CFR 1.53(b)-(d) and MPEP 506), a Filing Receipt (37 CFR 1.54) will be issued in due course and the date shown on this Acknowledgement Receipt will establish the filing date of the application.
National Stage of an International Application under 35 U.S.C. 371
If a timely submission to enter the national stage of an international application is compliant with the conditions of 35 U.S.C. 371 and other applicable requirements a Form PCT/DO/EO/903 indicating acceptance of the application as a national stage submission under 35 U.S.C. 371 will be issued in addition to the Filing Receipt, in due course.
New International Application Filed with the USPTO as a Receiving Office
If a new international application is being filed and the international application includes the necessary components for an international filing date (see PCT Article 11 and MPEP 1810), a Notification of the International Application Number and of the International Filing Date (Form PCT/RO/105) will be issued in due course, subject to prescriptions concerning national security, and the date shown on this Acknowledgement Receipt will establish the international filing date of the application.

UNITED STATES PATENT AND TRADEMARK OFFICE

UNITED STATES DEPARTMENT OF COMMERCE
United States Patent and Trademark Office
Address: COMMISSIONER FOR PATENTS
P.O. Box 1450
Alexandria, Virginia 22313-1450
www.uspto.gov

NOTICE OF ALLOWANCE AND FEE(S) DUE

10949 7590 09/15/2017
Nokia Corporation and Alston & Bird LLP
c/o Alston & Bird LLP
Bank of America Plaza, 101 South Tryon Street
Suite 4000
Charlotte, NC 28280-4000

EXAMINER
LE, PETER D

ART UNIT	PAPER NUMBER
2488	

DATE MAILED: 09/15/2017

APPLICATION NO.	FILING DATE	FIRST NAMED INVENTOR	ATTORNEY DOCKET NO.	CONFIRMATION NO.
15/490,469	04/18/2017	Kemal UGUR	042933/496984	5040

TITLE OF INVENTION: MOTION PREDICTION IN VIDEO CODING

APPLN. TYPE	ENTITY STATUS	ISSUE FEE DUE	PUBLICATION FEE DUE	PREV. PAID ISSUE FEE	TOTAL FEE(S) DUE	DATE DUE
nonprovisional	UNDISCOUNTED	$960	$0	$0	$960	12/15/2017

THE APPLICATION IDENTIFIED ABOVE HAS BEEN EXAMINED AND IS ALLOWED FOR ISSUANCE AS A PATENT. PROSECUTION ON THE MERITS IS CLOSED. THIS NOTICE OF ALLOWANCE IS NOT A GRANT OF PATENT RIGHTS. THIS APPLICATION IS SUBJECT TO WITHDRAWAL FROM ISSUE AT THE INITIATIVE OF THE OFFICE OR UPON PETITION BY THE APPLICANT. SEE 37 CFR 1.313 AND MPEP 1308.

THE ISSUE FEE AND PUBLICATION FEE (IF REQUIRED) MUST BE PAID WITHIN THREE MONTHS FROM THE MAILING DATE OF THIS NOTICE OR THIS APPLICATION SHALL BE REGARDED AS ABANDONED. THIS STATUTORY PERIOD CANNOT BE EXTENDED. SEE 35 U.S.C. 151. THE ISSUE FEE DUE INDICATED ABOVE DOES NOT REFLECT A CREDIT FOR ANY PREVIOUSLY PAID ISSUE FEE IN THIS APPLICATION. IF AN ISSUE FEE HAS PREVIOUSLY BEEN PAID IN THIS APPLICATION (AS SHOWN ABOVE), THE RETURN OF PART B OF THIS FORM WILL BE CONSIDERED A REQUEST TO REAPPLY THE PREVIOUSLY PAID ISSUE FEE TOWARD THE ISSUE FEE NOW DUE.

HOW TO REPLY TO THIS NOTICE:

I. Review the ENTITY STATUS shown above. If the ENTITY STATUS is shown as SMALL or MICRO, verify whether entitlement to that entity status still applies.

If the ENTITY STATUS is the same as shown above, pay the TOTAL FEE(S) DUE shown above.

If the ENTITY STATUS is changed from that shown above, on PART B - FEE(S) TRANSMITTAL, complete section number 5 titled "Change in Entity Status (from status indicated above)".

For purposes of this notice, small entity fees are 1/2 the amount of undiscounted fees, and micro entity fees are 1/2 the amount of small entity fees.

II. PART B - FEE(S) TRANSMITTAL, or its equivalent, must be completed and returned to the United States Patent and Trademark Office (USPTO) with your ISSUE FEE and PUBLICATION FEE (if required). If you are charging the fee(s) to your deposit account, section "4b" of Part B - Fee(s) Transmittal should be completed and an extra copy of the form should be submitted. If an equivalent of Part B is filed, a request to reapply a previously paid issue fee must be clearly made, and delays in processing may occur due to the difficulty in recognizing the paper as an equivalent of Part B.

III. All communications regarding this application must give the application number. Please direct all communications prior to issuance to Mail Stop ISSUE FEE unless advised to the contrary.

IMPORTANT REMINDER: Utility patents issuing on applications filed on or after Dec. 12, 1980 may require payment of maintenance fees. It is patentee's responsibility to ensure timely payment of maintenance fees when due.

PTOL-85 (Rev. 02/11)

Nokia Exhibit 2013, p.14
ASUS v. Nokia
IPR2025-01154

PART B - FEE(S) TRANSMITTAL

Complete and send this form, together with applicable fee(s), to: Mail **Mail Stop ISSUE FEE**
Commissioner for Patents
P.O. Box 1450
Alexandria, Virginia 22313-1450
or Fax (571)-273-2885

INSTRUCTIONS: This form should be used for transmitting the ISSUE FEE and PUBLICATION FEE (if required). Blocks 1 through 5 should be completed where appropriate. All further correspondence including the Patent, advance orders and notification of maintenance fees will be mailed to the current correspondence address as indicated unless corrected below or directed otherwise in Block 1, by (a) specifying a new correspondence address; and/or (b) indicating a separate "FEE ADDRESS" for maintenance fee notifications.

CURRENT CORRESPONDENCE ADDRESS (Note: Use Block 1 for any change of address)

10949 7590 09/15/2017
Nokia Corporation and Alston & Bird LLP
c/o Alston & Bird LLP
Bank of America Plaza, 101 South Tryon Street
Suite 4000
Charlotte, NC 28280-4000

Note: A certificate of mailing can only be used for domestic mailings of the Fee(s) Transmittal. This certificate cannot be used for any other accompanying papers. Each additional paper, such as an assignment or formal drawing, must have its own certificate of mailing or transmission.

Certificate of Mailing or Transmission
I hereby certify that this Fee(s) Transmittal is being deposited with the United States Postal Service with sufficient postage for first class mail in an envelope addressed to the Mail Stop ISSUE FEE address above, or being facsimile transmitted to the USPTO (571) 273-2885, on the date indicated below.

(Depositor's name)
(Signature)
(Date)

APPLICATION NO.	FILING DATE	FIRST NAMED INVENTOR	ATTORNEY DOCKET NO.	CONFIRMATION NO.
15/490,469	04/18/2017	Kemal UGUR	042933/496984	5040

TITLE OF INVENTION: MOTION PREDICTION IN VIDEO CODING

APPLN. TYPE	ENTITY STATUS	ISSUE FEE DUE	PUBLICATION FEE DUE	PREV. PAID ISSUE FEE	TOTAL FEE(S) DUE	DATE DUE
nonprovisional	UNDISCOUNTED	$960	$0	$0	$960	12/15/2017

EXAMINER	ART UNIT	CLASS-SUBCLASS
LE, PETER D	2488	375-240150

1. Change of correspondence address or indication of "Fee Address" (37 CFR 1.363).
- ❑ Change of correspondence address (or Change of Correspondence Address form PTO/SB/122) attached.
- ❑ "Fee Address" indication (or "Fee Address" Indication form PTO/SB/47; Rev 03-02 or more recent) attached. **Use of a Customer Number is required.**

2. For printing on the patent front page, list
(1) The names of up to 3 registered patent attorneys or agents OR, alternatively,
(2) The name of a single firm (having as a member a registered attorney or agent) and the names of up to 2 registered patent attorneys or agents. If no name is listed, no name will be printed.
1 _____
2 _____
3 _____

3. ASSIGNEE NAME AND RESIDENCE DATA TO BE PRINTED ON THE PATENT (print or type)

PLEASE NOTE: Unless an assignee is identified below, no assignee data will appear on the patent. If an assignee is identified below, the document has been filed for recordation as set forth in 37 CFR 3.11. Completion of this form is NOT a substitute for filing an assignment.

(A) NAME OF ASSIGNEE (B) RESIDENCE: (CITY and STATE OR COUNTRY)

Please check the appropriate assignee category or categories (will not be printed on the patent) : ❑ Individual ❑ Corporation or other private group entity ❑ Government

4a. The following fee(s) are submitted:
- ❑ Issue Fee
- ❑ Publication Fee (No small entity discount permitted)
- ❑ Advance Order - # of Copies _____

4b. Payment of Fee(s): **(Please first reapply any previously paid issue fee shown above)**
- ❑ A check is enclosed.
- ❑ Payment by credit card. Form PTO-2038 is attached.
- ❑ The director is hereby authorized to charge the required fee(s), any deficiency, or credits any overpayment, to Deposit Account Number _____ (enclose an extra copy of this form).

5. **Change in Entity Status** (from status indicated above)
- ❑ Applicant certifying micro entity status. See 37 CFR 1.29 — NOTE: Absent a valid certification of Micro Entity Status (see forms PTO/SB/15A and 15B), issue fee payment in the micro entity amount will not be accepted at the risk of application abandonment.
- ❑ Applicant asserting small entity status. See 37 CFR 1.27 — NOTE: If the application was previously under micro entity status, checking this box will be taken to be a notification of loss of entitlement to micro entity status.
- ❑ Applicant changing to regular undiscounted fee status. — NOTE: Checking this box will be taken to be a notification of loss of entitlement to small or micro entity status, as applicable.

NOTE: This form must be signed in accordance with 37 CFR 1.31 and 1.33. See 37 CFR 1.4 for signature requirements and certifications.

Authorized Signature _____ Date _____

Typed or printed name _____ Registration No. _____

PTOL-85 Part B (10-13) Approved for use through 10/31/2013. OMB 0651-0033 U.S. Patent and Trademark Office; U.S. DEPARTMENT OF COMMERCE

Nokia Exhibit 2013, p.15
ASUS v. Nokia
IPR2025-01154

UNITED STATES PATENT AND TRADEMARK OFFICE

UNITED STATES DEPARTMENT OF COMMERCE
United States Patent and Trademark Office
Address: COMMISSIONER FOR PATENTS
P.O. Box 1450
Alexandria, Virginia 22313-1450
www.uspto.gov

APPLICATION NO.	FILING DATE	FIRST NAMED INVENTOR	ATTORNEY DOCKET NO.	CONFIRMATION NO.
15/490,469	04/18/2017	Kemal UGUR	042933/496984	5040

10949 7590 09/15/2017
Nokia Corporation and Alston & Bird LLP
c/o Alston & Bird LLP
Bank of America Plaza, 101 South Tryon Street
Suite 4000
Charlotte, NC 28280-4000

EXAMINER
LE, PETER D

ART UNIT	PAPER NUMBER
2488	

DATE MAILED: 09/15/2017

Determination of Patent Term Adjustment under 35 U.S.C. 154 (b)
(Applications filed on or after May 29, 2000)

The Office has discontinued providing a Patent Term Adjustment (PTA) calculation with the Notice of Allowance.

Section 1(h)(2) of the AIA Technical Corrections Act amended 35 U.S.C. 154(b)(3)(B)(i) to eliminate the requirement that the Office provide a patent term adjustment determination with the notice of allowance. See Revisions to Patent Term Adjustment, 78 Fed. Reg. 19416, 19417 (Apr. 1, 2013). Therefore, the Office is no longer providing an initial patent term adjustment determination with the notice of allowance. The Office will continue to provide a patent term adjustment determination with the Issue Notification Letter that is mailed to applicant approximately three weeks prior to the issue date of the patent, and will include the patent term adjustment on the patent. Any request for reconsideration of the patent term adjustment determination (or reinstatement of patent term adjustment) should follow the process outlined in 37 CFR 1.705.

Any questions regarding the Patent Term Extension or Adjustment determination should be directed to the Office of Patent Legal Administration at (571)-272-7702. Questions relating to issue and publication fee payments should be directed to the Customer Service Center of the Office of Patent Publication at 1-(888)-786-0101 or (571)-272-4200.

PTOL-85 (Rev. 02/11)

Nokia Exhibit 2013, p.16
ASUS v. Nokia
IPR2025-01154

OMB Clearance and PRA Burden Statement for PTOL-85 Part B

The Paperwork Reduction Act (PRA) of 1995 requires Federal agencies to obtain Office of Management and Budget approval before requesting most types of information from the public. When OMB approves an agency request to collect information from the public, OMB (i) provides a valid OMB Control Number and expiration date for the agency to display on the instrument that will be used to collect the information and (ii) requires the agency to inform the public about the OMB Control Number's legal significance in accordance with 5 CFR 1320.5(b).

The information collected by PTOL-85 Part B is required by 37 CFR 1.311. The information is required to obtain or retain a benefit by the public which is to file (and by the USPTO to process) an application. Confidentiality is governed by 35 U.S.C. 122 and 37 CFR 1.14. This collection is estimated to take 12 minutes to complete, including gathering, preparing, and submitting the completed application form to the USPTO. Time will vary depending upon the individual case. Any comments on the amount of time you require to complete this form and/or suggestions for reducing this burden, should be sent to the Chief Information Officer, U.S. Patent and Trademark Office, U.S. Department of Commerce, P.O. Box 1450, Alexandria, Virginia 22313-1450. DO NOT SEND FEES OR COMPLETED FORMS TO THIS ADDRESS. SEND TO: Commissioner for Patents, P.O. Box 1450, Alexandria, Virginia 22313-1450. Under the Paperwork Reduction Act of 1995, no persons are required to respond to a collection of information unless it displays a valid OMB control number.

Privacy Act Statement

The Privacy Act of 1974 (P.L. 93-579) requires that you be given certain information in connection with your submission of the attached form related to a patent application or patent. Accordingly, pursuant to the requirements of the Act, please be advised that: (1) the general authority for the collection of this information is 35 U.S.C. 2(b)(2); (2) furnishing of the information solicited is voluntary; and (3) the principal purpose for which the information is used by the U.S. Patent and Trademark Office is to process and/or examine your submission related to a patent application or patent. If you do not furnish the requested information, the U.S. Patent and Trademark Office may not be able to process and/or examine your submission, which may result in termination of proceedings or abandonment of the application or expiration of the patent.

The information provided by you in this form will be subject to the following routine uses:

1. The information on this form will be treated confidentially to the extent allowed under the Freedom of Information Act (5 U.S.C. 552) and the Privacy Act (5 U.S.C 552a). Records from this system of records may be disclosed to the Department of Justice to determine whether disclosure of these records is required by the Freedom of Information Act.
2. A record from this system of records may be disclosed, as a routine use, in the course of presenting evidence to a court, magistrate, or administrative tribunal, including disclosures to opposing counsel in the course of settlement negotiations.
3. A record in this system of records may be disclosed, as a routine use, to a Member of Congress submitting a request involving an individual, to whom the record pertains, when the individual has requested assistance from the Member with respect to the subject matter of the record.
4. A record in this system of records may be disclosed, as a routine use, to a contractor of the Agency having need for the information in order to perform a contract. Recipients of information shall be required to comply with the requirements of the Privacy Act of 1974, as amended, pursuant to 5 U.S.C. 552a(m).
5. A record related to an International Application filed under the Patent Cooperation Treaty in this system of records may be disclosed, as a routine use, to the International Bureau of the World Intellectual Property Organization, pursuant to the Patent Cooperation Treaty.
6. A record in this system of records may be disclosed, as a routine use, to another federal agency for purposes of National Security review (35 U.S.C. 181) and for review pursuant to the Atomic Energy Act (42 U.S.C. 218(c)).
7. A record from this system of records may be disclosed, as a routine use, to the Administrator, General Services, or his/her designee, during an inspection of records conducted by GSA as part of that agency's responsibility to recommend improvements in records management practices and programs, under authority of 44 U.S.C. 2904 and 2906. Such disclosure shall be made in accordance with the GSA regulations governing inspection of records for this purpose, and any other relevant (i.e., GSA or Commerce) directive. Such disclosure shall not be used to make determinations about individuals.
8. A record from this system of records may be disclosed, as a routine use, to the public after either publication of the application pursuant to 35 U.S.C. 122(b) or issuance of a patent pursuant to 35 U.S.C. 151. Further, a record may be disclosed, subject to the limitations of 37 CFR 1.14, as a routine use, to the public if the record was filed in an application which became abandoned or in which the proceedings were terminated and which application is referenced by either a published application, an application open to public inspection or an issued patent.
9. A record from this system of records may be disclosed, as a routine use, to a Federal, State, or local law enforcement agency, if the USPTO becomes aware of a violation or potential violation of la

Notice of Allowability	Application No. 15/490,469	Applicant(s) UGUR ET AL.	
	Examiner PETER D. LE	Art Unit 2488	AIA (First Inventor to File) Status No

-- The MAILING DATE of this communication appears on the cover sheet with the correspondence address--

All claims being allowable, PROSECUTION ON THE MERITS IS (OR REMAINS) CLOSED in this application. If not included herewith (or previously mailed), a Notice of Allowance (PTOL-85) or other appropriate communication will be mailed in due course. **THIS NOTICE OF ALLOWABILITY IS NOT A GRANT OF PATENT RIGHTS.** This application is subject to withdrawal from issue at the initiative of the Office or upon petition by the applicant. See 37 CFR 1.313 and MPEP 1308.

1. ☒ This communication is responsive to *04/18/2017*.
   ☐ A declaration(s)/affidavit(s) under **37 CFR 1.130(b)** was/were filed on_____.
2. ☐ An election was made by the applicant in response to a restriction requirement set forth during the interview on _____; the restriction requirement and election have been incorporated into this action.
3. ☒ The allowed claim(s) is/are *1-26*. As a result of the allowed claim(s), you may be eligible to benefit from the **Patent Prosecution Highway** program at a participating intellectual property office for the corresponding application. For more information, please see http://www.uspto.gov/patents/init_events/pph/index.jsp or send an inquiry to PPHfeedback@uspto.gov.
4. ☐ Acknowledgment is made of a claim for foreign priority under 35 U.S.C. § 119(a)-(d) or (f).

   Certified copies:

   a) ☐ All b) ☐ Some *c) ☐ None of the:
   1. ☐ Certified copies of the priority documents have been received.
   2. ☐ Certified copies of the priority documents have been received in Application No. _____ .
   3. ☐ Copies of the certified copies of the priority documents have been received in this national stage application from the International Bureau (PCT Rule 17.2(a)).

   * Certified copies not received: _____.

Applicant has THREE MONTHS FROM THE "MAILING DATE" of this communication to file a reply complying with the requirements noted below. Failure to timely comply will result in ABANDONMENT of this application.
THIS THREE-MONTH PERIOD IS NOT EXTENDABLE.

5. ☐ CORRECTED DRAWINGS (as "replacement sheets") must be submitted.
   ☐ including changes required by the attached Examiner's Amendment / Comment or in the Office action of Paper No./Mail Date _____.

   Identifying indicia such as the application number (see 37 CFR 1.84(c)) should be written on the drawings in the front (not the back) of each sheet. Replacement sheet(s) should be labeled as such in the header according to 37 CFR 1.121(d).
6. ☐ DEPOSIT OF and/or INFORMATION about the deposit of BIOLOGICAL MATERIAL must be submitted. Note the attached Examiner's comment regarding REQUIREMENT FOR THE DEPOSIT OF BIOLOGICAL MATERIAL.

Attachment(s)

1. ☐ Notice of References Cited (PTO-892)
2. ☒ Information Disclosure Statements (PTO/SB/08), Paper No./Mail Date 05/08/2017
3. ☐ Examiner's Comment Regarding Requirement for Deposit of Biological Material
4. ☐ Interview Summary (PTO-413), Paper No./Mail Date _____ .
5. ☐ Examiner's Amendment/Comment
6. ☒ Examiner's Statement of Reasons for Allowance
7. ☐ Other _____.

/PETER D LE/
Primary Examiner, Art Unit 2488

Nokia Exhibit 2013, p.18
ASUS v. Nokia
IPR2025-01154

DETAILED ACTION

The present application is being examined under the pre-AIA first to invent provisions

Claims 1-26 filed on 4/18/2017 are pending.

Terminal Disclaimer

1. The terminal disclaimer filed on 06/26/2017 disclaiming the terminal portion of any patent granted on this application which would extend beyond the expiration date of U.S Patent Application 13/344893 (U.S Patent 9,432,693) and 15/250124 (U.S Patent 8,628,816) has been reviewed and is accepted. The terminal disclaimer has been recorded.

Claim Interpretation - 35 USC § 112

The following is a quotation of 35 U.S.C. 112(f):

> (f) Element in Claim for a Combination. – An element in a claim for a combination may be expressed as a means or step for performing a specified function without the recital of structure, material, or acts in support thereof, and such claim shall be construed to cover the corresponding structure, material, or acts described in the specification and equivalents thereof.
>
> The following is a quotation of pre-AIA 35 U.S.C. 112, sixth paragraph:
>
> An element in a claim for a combination may be expressed as a means or step for performing a specified function without the recital of structure, material, or acts in

support thereof, and such claim shall be construed to cover the corresponding structure, material, or acts described in the specification and equivalents thereof.

Use of the word "means" (or "step for") in a claim with functional language creates a rebuttable presumption that the claim element is to be treated in accordance with 35 U.S.C. 112(f) (pre-AIA 35 U.S.C. 112, sixth paragraph). The presumption that 35 U.S.C. 112(f) (pre-AIA 35 U.S.C. 112, sixth paragraph) is invoked is rebutted when the function is recited with sufficient structure, material, or acts within the claim itself to entirely perform the recited function.

Absence of the word "means" (or "step for") in a claim creates a rebuttable presumption that the claim element is not to be treated in accordance with 35 U.S.C. 112(f) (pre-AIA 35 U.S.C. 112, sixth paragraph). The presumption that 35 U.S.C. 112(f) (pre-AIA 35 U.S.C. 112, sixth paragraph) is not invoked is rebutted when the claim element recites function but fails to recite sufficiently definite structure, material or acts to perform that function.

Claim elements in this application that use the word "means" (or "step for") are presumed to invoke 35 U.S.C. 112(f) except as otherwise indicated in an Office action. Similarly, claim elements that do not use the word "means" (or "step for") are presumed not to invoke 35 U.S.C. 112(f) except as otherwise indicated in an Office action.

Claim 23 is interpreted under 35 U.S.C. 112(f) or pre-AIA 35 U.S.C. 112, sixth paragraph.

Claim 19 is interpreted under 35 U.S.C. 112(f) or pre-AIA 35 U.S.C. 112, sixth paragraph because of a term “a determinator”, “a first predictor”, “a second predictor”, "a combiner" or "a shifter" that serves as a generic placeholder and that is coupled with functional language without reciting sufficient structure to achieve the function “to determine”, “to use”, "to obtain" or "to decrease". Furthermore, the generic placeholder is not preceded by a structural modifier.

Since the claim limitation(s) invokes 35 U.S.C. 112(f) or pre-AIA 35 U.S.C. 112, sixth paragraph, claim(s) is interpreted to cover the corresponding structure described in the specification that achieves the claimed function, and equivalents thereof.

A review of the specification or drawings shows **the corresponding structure** for the claimed functions in accordance with the 35 U.S.C. 112(f) or pre-AIA 35 U.S.C. 112, sixth paragraph: a combination of a personal digital assistant (PDA) and a mobile telephone 14, a PDA 16, an integrated messaging device (IMD) 18, a desktop computer 20, a notebook computer 22 [Fig. 3; para. 0107].

If applicant wishes to provide further explanation or dispute the examiner’s interpretation of the corresponding structure, applicant must identify the corresponding structure with reference to the specification by page and line number, and to the drawing, if any, by reference characters in response to this Office action.

If applicant does not intend to have the claim limitation(s) treated under 35 U.S.C. 112(f) or pre-AIA 35 U.S.C. 112 , sixth paragraph, applicant may amend the claim(s) so that it/they will

clearly not invoke 35 U.S.C. 112(f) or pre-AIA 35 U.S.C. 112, sixth paragraph, or present a sufficient showing that the claim recites/recite sufficient structure, material, or acts for performing the claimed function to preclude application of 35 U.S.C. 112(f) or pre-AIA 35 U.S.C. 112, sixth paragraph.

For more information, see MPEP § 2173 *et seq.* and *Supplementary Examination Guidelines for Determining Compliance With 35 U.S.C. 112 and for Treatment of Related Issues in Patent Applications*, 76 FR 7162, 7167 (Feb. 9, 2011).

REASON FOR ALLOWANCE

[1] The claimed invention is a method/an apparatus/a computer program product for decoding or encoding video with a distinct combination of limitations which is the allowed subject matter in the parent case 13/344893 (emphasis added): "determining a coding type of a block of pixels of a video, values of said pixels having a first precision, wherein the first precision indicates the number of bits needed to represent values of said pixels; if the determining indicates that the block is a block predicted by using two or more reference blocks, **the reference blocks having said first precision:** determining a first reference pixel location in a first reference block and a second reference pixel location in a second reference block; using said first reference pixel location to obtain a first prediction by **interpolation,** said first prediction having a second precision, which is higher than said first precision; using said

second reference pixel location to obtain a second prediction, said second prediction having the second precision, which is higher than said first precision, **wherein the second precision indicates the number of bits needed to represent values of said first prediction and values of said second prediction; obtaining a combined prediction** (**Note:** a combined prediction is construed to be a summing/adding of the prediction signals in light of Specification, para. 0025) **based at least partly upon said first prediction and said second prediction;** and **decreasing the precision of said combined prediction** by **shifting bits of the combined prediction to the right.".**

[2] Prior arts were found and applied in the prior action[s] for the case 13/344893. None of the prior arts of the record explicitly teach the distinct combination of the said limitations.

[3] Any comments considered necessary by applicant must be submitted no later than the payment of the issue fee and, to avoid processing delays, should preferably accompany the issue fee. Such submissions should be clearly labeled "Comments on Statement of Reasons for Allowance."

[4] **Claims 1-26** are allowed.

CONTACT

Any inquiry concerning this communication or earlier communications from the examiner should be directed to PETER D. LE whose telephone number is (571)270-5382. The examiner can normally be reached on Monday - (Alternate) Friday from 10:00AM-6:30PM (EST).

If attempts to reach the examiner by telephone are unsuccessful, the examiner's supervisor, SATH PERUNGAVOOR can be reached on 571-272-7455. The fax phone number for the organization where this application or proceeding is assigned is 571-273-8300.

Information regarding the status of an application may be obtained from the Patent Application Information Retrieval (PAIR) system. Status information for published applications may be obtained from either Private PAIR or Public PAIR. Status information for unpublished applications is available through Private PAIR only. For more information about the PAIR system, see http://pair-direct.uspto.gov. Should you have questions on access to the Private PAIR system, contact the Electronic Business Center (EBC) at 866-217-9197 (toll-free). If you would like assistance from a USPTO Customer Service Representative or access to the automated information system, call 800-786-9199 (IN USA OR CANADA) or 571-272-1000.

/PETER D LE/

Primary Examiner, Art Unit 2488

UNITED STATES PATENT AND TRADEMARK OFFICE

UNITED STATES DEPARTMENT OF COMMERCE
United States Patent and Trademark Office
Address: COMMISSIONER FOR PATENTS
P.O. Box 1450
Alexandria, Virginia 22313-1450
www.uspto.gov

BIB DATA SHEET

CONFIRMATION NO. 5040

SERIAL NUMBER	FILING or 371(c) DATE	CLASS	GROUP ART UNIT	ATTORNEY DOCKET NO.
15/490,469	04/18/2017 RULE	375	2488	042933/496984

APPLICANTS
Nokia Technologies Oy, Espoo, FINLAND;

INVENTORS
Kemal UGUR, Tampere, FINLAND;
Jani LAINEMA, Tampere, FINLAND;
Antti HALLAPURO, Tampere, FINLAND;

**** CONTINUING DATA ***************************
This application is a CON of 15/250,124 08/29/2016 PAT 9628816
which is a CON of 13/344,893 01/06/2012 PAT 9432693
which claims benefit of 61/430,694 01/07/2011

**** FOREIGN APPLICATIONS ***************************

**** IF REQUIRED, FOREIGN FILING LICENSE GRANTED ****
04/25/2017

Foreign Priority claimed ☐ Yes ☑ No 35 USC 119(a-d) conditions met ☐ Yes ☐ No Verified and Acknowledged /PETER D LE/ Examiner's Signature	☐ Met after Allowance Initials	STATE OR COUNTRY	SHEETS DRAWINGS	TOTAL CLAIMS	INDEPENDENT CLAIMS
		FINLAND	11	26	5

ADDRESS
Nokia Corporation and Alston & Bird LLP
c/o Alston & Bird LLP
Bank of America Plaza, 101 South Tryon Street
Suite 4000
Charlotte, NC 28280-4000
UNITED STATES

TITLE
MOTION PREDICTION IN VIDEO CODING

FILING FEE RECEIVED		
2920	FEES: Authority has been given in Paper No._____ to charge/credit DEPOSIT ACCOUNT No._____ for following:	☐ All Fees ☐ 1.16 Fees (Filing) ☐ 1.17 Fees (Processing Ext. of time) ☐ 1.18 Fees (Issue) ☐ Other _____ ☐ Credit

EAST Search History

EAST Search History (Prior Art)

Ref #	Hits	Search Query	DBs	Default Operator	Plurals	Time Stamp
S2	1	13/344893.app.	US-PGPUB; USPAT	OR	ON	2015/07/15 21:24
S3	6190	(H04N19/42 OR H04N19/523 OR H04N19/577).CPC.	US-PGPUB; USPAT	OR	ON	2015/07/15 21:26
S4	38055	(bit NEAR2 pixel)	US-PGPUB; USPAT	OR	ON	2015/07/15 21:48
S5	4413	(bit NEAR2 pixel) WITH (resolution)	US-PGPUB; USPAT	OR	ON	2015/07/15 21:49
S6	4897	(bit NEAR2 pixel) WITH (resolution precision)	US-PGPUB; USPAT	OR	ON	2015/07/15 21:49
S7	7265	((bit NEAR2 pixel) (bit NEAR2 depth)) WITH (resolution precision)	US-PGPUB; USPAT	OR	ON	2015/07/15 22:35
S8	160	(((bit NEAR2 pixel) (bit NEAR2 depth) (number NEAR2 bits)) WITH (resolution precision) WITH (predict$3))	US-PGPUB; USPAT	OR	ON	2015/07/15 22:37
S9	8	("6512523" | "20100002770" | "20100086027" | "20090087111" | "6539058" | "20090257503" | "20080089417" | "20100086027" | "20130142262").PN.	US-PGPUB; USPAT	OR	ON	2015/07/15 22:48
S10	1	S9 and S7	US-PGPUB; USPAT	OR	ON	2015/07/15 22:59
S11	100132	(((bit NEAR2 pixel) (bit NEAR2 depth) (number NEAR2 bits) (bit NEAR2 length)) WITH (determin$3 conver$5 increas$3 increment$3 decreas$3 decrement$3))	US-PGPUB; USPAT	OR	ON	2015/07/15 23:31
S12	2914	(((bit NEAR2 pixel) (bit NEAR2 depth) (number NEAR2 bits) (bit NEAR2 length)) WITH (determin$3 conver$5 increas$3 increment$3 decreas$3 decrement$3) WITH (predict$3 precision))	US-PGPUB; USPAT	OR	ON	2015/07/15 23:32
S13	1	13/344893.app. AND (predict$3 WITH precision)	US-PGPUB; USPAT	OR	ON	2015/07/15 23:51
S14	90	(((bit NEAR2 pixel) (bit NEAR2 depth) (number NEAR2 bits) (bit NEAR2 length)) WITH (determin$3 conver$5 increas$3 increment$3 decreas$3 decrement$3) WITH (predict$3 precision)) SAME (inter$2predict$3 intra$2predict$3 inter$2frame intra$2frame)	US-PGPUB; USPAT	OR	ON	2015/07/15 23:56

S15	806	(((bit NEAR2 pixel) (bit NEAR2 depth) (number NEAR2 bits) (bit NEAR2 length)) WITH (predict$3 precision)) SAME (inter$2predict$3 intra$2predict$3 inter$2frame intra$2frame)	US-PGPUB; USPAT	OR	ON	2015/07/16 00:44
S16	716	S15 not S14	US-PGPUB; USPAT	OR	ON	2015/07/16 00:44
S17	546	(((bit NEAR2 pixel) (bit NEAR2 depth) (bit NEAR2 length)) WITH (predict$3 precision)) SAME (inter$2predict$3 intra$2predict$3 inter$2frame intra$2frame)	US-PGPUB; USPAT	OR	ON	2015/07/16 00:46
S18	509	(((bit NEAR2 pixel) (bit NEAR2 depth) (bit NEAR2 length)) WITH (determin$3 calculat$3 conver$5 precision)) SAME (inter$2predict$3 intra$2predict$3 inter$2frame intra$2frame) SAME (predict$3)	US-PGPUB; USPAT	OR	ON	2015/07/16 01:42
S19	14	(((bit NEAR2 pixel) (bit NEAR2 depth) (bit NEAR2 length)) NEAR3 (determin$3 calculat$3 conver$5 precision)) SAME (inter$2predict$3 intra$2predict$3 inter$2frame intra$2frame) SAME (predict$3)	US-PGPUB; USPAT	OR	ON	2015/07/16 01:43
S20	5180	(((bit NEAR2 pixel) (bit NEAR2 depth)) NEAR3 (determin$3 calculat$3 conver$5 precision))	US-PGPUB; USPAT	OR	ON	2015/07/16 01:53
S21	219	(((bit NEAR2 pixel) (bit NEAR2 depth) (bit NEAR2 length)) NEAR3 (determin$3 calculat$3 conver$5 precision)) SAME (predict$3)	US-PGPUB; USPAT	OR	ON	2015/07/16 01:54
S22	580	(((bit NEAR2 pixel) (bit NEAR2 depth)) NEAR3 (determin$3 calculat$3 conver$5 precision)) SAME precision	US-PGPUB; USPAT	OR	ON	2015/07/16 01:54
S23	539	(((bit NEAR2 pixel) (bit NEAR2 depth)) NEAR3 (determin$3 calculat$3 conver$5 precision)) WITH precision	US-PGPUB; USPAT	OR	ON	2015/07/16 01:55
S24	2	(((bit NEAR2 pixel) (bit NEAR2 depth)) NEAR3 (determin$3 calculat$3 conver$5 precision)) WITH precision WITH offset WITH shift$5	US-PGPUB; USPAT	OR	ON	2015/07/16 02:02
S25	1	"20100086027".pn.	US-PGPUB; USPAT	OR	ON	2015/07/20 18:36
S26	1	13/344893.app. and (precision)	US-PGPUB; USPAT	OR	ON	2016/01/20 13:45
S27	1	13/344893.app. and (precision WITH (predict$3 bi$2predict$3))	US-PGPUB; USPAT	OR	ON	2016/01/20 13:55
S28	44	((((bit NEAR2 pixel) (bit NEAR2 depth) (number NEAR2 bits) (bit NEAR2 length)) NEAR2 (determin$3 conver$5 increas$3 increment$3 decreas$3 decrement$3 scal$5)) WITH (predict$3 precision)) SAME (inter$2predict$3 intra$2predict$3 inter$2frame intra$2frame)	US-PGPUB; USPAT	OR	ON	2016/01/20 15:39
S29	231	(round$3 WITH (bit$2depth precision) WITH bit WITH (add$5 combin$5))	US-PGPUB;	OR	ON	2016/04/14 11:43

			USPAT			
S34	21	("20020171737" | "20040028286" | "20040179738" | "20040212703" | "20060038826" | "20060164699" | "20080025630" | "20080266413" | "20080278607" | "20090021611" | "20110050969" | "20120075506" | "20120099001" | "4972260" | "5157732" | "5598482" | "5887084" | "5943170" | "6122314" | "6211515" | "7362911").PN.	US-PGPUB; USPAT	OR	ON	2016/05/27 12:13
S35	5	("20100111182" | "20090257503" | "20100086027" | "6512523" | "6539058").PN.	US-PGPUB; USPAT	OR	ON	2016/05/27 12:18
S36	9	("6512523" | "20100002770" | "20100086027" | "20100111182" | "20090087111" | "6539058" | "20090257503" | "20080089417" | "20100086027" | "20130142262").PN.	US-PGPUB; USPAT	OR	ON	2016/05/27 12:20
S37	26	((encod$5 decod$5 cod$5) SAME (reference) SAME (fraction$5 pel interpolat$5) SAME (add$5 sum$5 combin$5) SAME (shift$5 WITH right))	US-PGPUB; USPAT	OR	ON	2016/12/03 01:12
S38	0	15/250124.app.	US-PGPUB; USPAT	OR	ON	2016/12/03 01:14
S41	1	15/490469.app.	US-PGPUB; USPAT	OR	ON	2017/08/28 12:05
S42	5	"13344893" "15250124"	US-PGPUB; USPAT	OR	ON	2017/08/28 16:29

EAST Search History (Interference)

Ref #	Hits	Search Query	DBs	Default Operator	Plurals	Time Stamp
L1	47	(predict$5 SAME interpolat$5 SAME (combin$8 add$5) SAME (shift$5 divi$8)).clm.	US-PGPUB; USPAT	OR	ON	2017/09/04 18:31
S30	26	(round$3 WITH (bit$2depth precision) WITH bit WITH (add$5 combin$5)).clm.	US-PGPUB; USPAT	OR	ON	2016/04/14 12:01
S31	0	(round$3 SAME (bit$2depth precision) SAME bit SAME (add$5 combin$5) SAME (high$3 low$3 second) SAME (interpolat$5) SAME (shift$5 increas$5 increment$5 multipl$5)).clm.	US-PGPUB; USPAT	OR	ON	2016/04/14 12:04
S32	0	(round$3 SAME (bit$2depth precision) SAME bit SAME (add$5 combin$5) SAME (high$3 low$3 second) SAME (interpolat$5)).clm.	US-PGPUB; USPAT	OR	ON	2016/04/14 12:05
S33	0	(round$3 SAME (bit$2depth precision) SAME bit SAME (add$5 combin$5) SAME (interpolat$5)).clm.	US-PGPUB; USPAT	OR	ON	2016/04/14 12:05
S39	1	((encod$5 decod$5 cod$5) SAME (reference) SAME (fraction$5 pel interpolat$5) SAME (add$5 sum$5 combin$5) SAME (shift$5 WITH right)).clm.	US-PGPUB; USPAT	OR	ON	2016/12/03 01:07
S40	26	((encod$5 decod$5 cod$5) SAME (reference) SAME (fraction$5 pel interpolat$5) SAME	US-PGPUB;	OR	ON	2016/12/03 01:08

		(add$5 sum$5 combin$5) SAME (shift$5 WITH right))	USPAT			

9/ 4/ 2017 6:35:29 PM
C:\ Users\ ple1\ Documents\ EAST\ Workspaces\ 13344893_15250124_15490469.wsp

Index of Claims	Application/Control No.	Applicant(s)/Patent Under Reexamination
	15490469	UGUR ET AL.
	Examiner	**Art Unit**
	PETER D LE	2488

✓	Rejected	-	Cancelled	N	Non-Elected	A	Appeal
=	Allowed	÷	Restricted	I	Interference	O	Objected

☒ Claims renumbered in the same order as presented by applicant ☐ CPA ☒ T.D. ☐ R.1.47

CLAIM		DATE								
Final	Original	09/04/2017								
	1	=								
	2	=								
	3	=								
	4	=								
	5	=								
	6	=								
	7	=								
	8	=								
	9	=								
	10	=								
	11	=								
	12	=								
	13	=								
	14	=								
	15	=								
	16	=								
	17	=								
	18	=								
	19	=								
	20	=								
	21	=								
	22	=								
	23	=								
	24	=								
	25	=								
	26	=								

Nokia Exhibit 2013, p.30
ASUS v. Nokia
IPR2025-01154

Substitute for form SB08

INFORMATION DISCLOSURE STATEMENT BY APPLICANT

(Use as many sheets as necessary)

Complete if Known	
Application Number	15/490,469
Filing Date	April 18, 2017
First Named Inventor	Ugur et al.
Art Unit	2488
Examiner Name	Peter D. Le
Attorney Docket Number	042933/496984

Sheet 1 of 2

U. S. PATENT DOCUMENTS

Examiner Initials*	Cite No.	Document Number Number - Kind Code (if known)	Publication Date MM-DD-YYYY	Name of Patentee or Applicant of Cited Document	Pages, Columns, Lines, Where Relevant Passages of Relevant Figures Appear
	1	US-6,512,523	01-28-2003	Gross	
	2	US-6,539,058	03-25-2003	Pearlstein et al.	
	3	US-2008/0089417 A1	04-17-2008	Bao et al.	
	4	US-2009/0087111 A1	04-02-2009	Noda et al.	
	5	US-2009/0257503 A1	10-15-2009	Ye et al.	
	6	US-2010/0002770 A1	01-07-2010	Motta et al.	
	7	US-2010/0086027 A1	04-08-2010	Panchal et al.	
	8	US-2010/0111182 A1	05-06-2010	Karczewicz et al.	
	9	US-2013/0142262 A1	06-06-2013	Ye et al.	

FOREIGN PATENT DOCUMENTS

Examiner Initials	Cite No.	Country Code - Number Kind Code (if known)	Publication Date MM-DD-YYYY	Name of Patentee or Applicant of Cited Document	Pages, Columns, Lines, Where Relevant Passages or Relevant Figures Appear	English Language Translation Attached
	10	CA 2729615 A1	01-07-2010	Kabushiki Kaisha Toshiba		
	11	WO 2008/048864 A2	04-24-2008	Qualcomm Inc.		

OTHER DOCUMENTS

Examiner Initials*	Cite No.	Include name of the author (in CAPITAL LETTERS), title of the article (when appropriate), title of the item (book, magazine, journal, serial, symposium, catalog, etc.), date, page(s) , volume-issue number(s), publisher, city and/or country where published.	English Language Translation Attached
	12	"Advanced Video Coding for Generic Audiovisual Services", Series H: Audiovisual And Multimedia Systems, Infrastructure of audiovisual services — Coding of moving video, ITU-T Recommendation H.264, November, 2007, 564 pages	
	13	UGUR et al., "High precision bi-directional averaging", Joint CollaborativeTeam on Video Coding (JCT.VC) of ITV-T WP3 and ISO/IEC JTC1/SC29NVG11, 4th Meeting, January 20-28, 2011, pp. 1-3	
	14	UGUR et al., "On clipping in bi-directional averaging", Joint Collaborative Team on Video Coding (JCT-VC) of ITU-T WP3 and ISO/IEC JTC1/SC29/WG11, 5th Meeting, March 16-23, 2011, pp. 1-4	

Examiner Signature	/PETER D LE/	Date Considered	09/04/2017

*Examiner: Initial if reference considered, whether or not citation is in conformance with MPEP 609. Draw line through citation if not in conformance and not considered. Include copy of this form with next communication to applicant.

Submitted May 8, 2017

ALL REFERENCES CONSIDERED EXCEPT WHERE LINED THROUGH. /P.D.L/

Substitute for form SB08				Complete if Known	
INFORMATION DISCLOSURE STATEMENT BY APPLICANT *(Use as many sheets as necessary)*				Application Number	15/490,469
				Filing Date	April 18, 2017
				First Named Inventor	Ugur et al.
				Art Unit	2488
				Examiner Name	Peter D. Le
Sheet	2	of	2	Attorney Docket Number	042933/496984

OTHER DOCUMENTS

Examiner Initials*	Cite No.	Include name of the author (in CAPITAL LETTERS), title of the article (when appropriate), title of the item (book, magazine, journal, serial, symposium, catalog, etc.), date, page(s), volume-issue number(s), publisher, city and/or country where published.	English Language Translation Attached
	15	YE et al., "High Precision Interpolation and Prediction"; 35 VCEG Meeting; 85. MPEG Meeting; July 16, 2008 - July 18, 2008; Berlin; Video Coding Experts Group of ITU-T SG.16; No. VCEG-AI33; July 12, 2008; XP030003598	
	16	YI-JEN CHIU et al.: "TE1: Fast Techniques to Improve Self Derivation of Motion Estimation"; JCT-VC Meeting; July 21, 2010 - July 28, 2010; Geneva; Joint Collaborative Team on Video Coding of ISO/IEC JTC1/SC29/WG11 and ITU-T SG.16; July 28, 2010; XP030007627	
	17	International Search Report and Written Opinion received for corresponding Patent Cooperation Treaty Application No. PCT/IB2012/050089 dated May 09, 2012, 14 page	
	18	Office Action from Korean Patent Application No. 2013-7020731, dated July 31, 2014	
	19	Office Action from Russian Patent Application No. 2013136693, dated November 28, 2014	
	20	Office Action from Korean Patent Application No. 2013-7020731, dated August 26, 2015	
	21	Extended European Search Report from corresponding European Patent Application No. 12731927.5 dated May 6, 2016	
	22	Office Action from Vietnamese Patent Application No. 1-2013-02120 dated January 23, 2017, with English Language translation, 2 pages.	
	23	Office Action for Chinese Patent Application No. 2012800096959 dated March 20, 2017, with English summary, 7 pages.	
	24	Non-Final Office Action for U.S. Patent Application No. 13/344,893 dated July 16, 2014, 24 pages.	
	25	Final Office Action for U.S. Patent Application No. 13/344,893 dated January 23, 2015, 20 pages.	
	26	Non-Final Office Action for U.S. Patent Application No. 13/344,893 dated July 28, 2015, 17 pages.	
	27	Notice of Allowance for U.S. Patent Application No. 13/344,893 dated April 27, 2016, 20 pages.	
	28	Notice of Allowance for U.S. Patent Application No. 15/250,124 dated December 13, 2016, 13 pages.	

Examiner Signature	/PETER D LE/	Date Considered	09/04/2017

*Examiner: Initial if reference considered, whether or not citation is in conformance with MPEP 609. Draw line through citation if not in conformance and not considered. Include copy of this form with next communication to applicant.

Submitted May 8, 2017

ALL REFERENCES CONSIDERED EXCEPT WHERE LINED THROUGH. /P.D.L/

Issue Classification	Application/Control No.	Applicant(s)/Patent Under Reexamination
	15490469	UGUR ET AL.
	Examiner	**Art Unit**
	PETER D LE	2488

CPC						
Symbol					**Type**	**Version**
H04N		19	/	50	F	2014-11-01
H04N		19	/	105	I	2014-11-01
H04N		19	/	176	A	2014-11-01
H04N		19	/	182	A	2014-11-01
H04N		19	/	184	A	2014-11-01
			/			
			/			
			/			
			/			
			/			
			/			
			/			
			/			
			/			
			/			

CPC Combination Sets							
Symbol					**Type**	**Set**	**Ranking**	**Version**
			/					
			/					

NONE (Assistant Examiner)	(Date)	**Total Claims Allowed:** 26	
/PETER D LE/ Primary Examiner.Art Unit 2488 (Primary Examiner)	09/04/2017 (Date)	O.G. Print Claim(s) 1	O.G. Print Figure 10

U.S. Patent and Trademark Office

Part of Paper No. 20170904

Issue Classification	Application/Control No.	Applicant(s)/Patent Under Reexamination
	15490469	UGUR ET AL.
	Examiner	**Art Unit**
	PETER D LE	2488

US ORIGINAL CLASSIFICATION		INTERNATIONAL CLASSIFICATION	
CLASS	SUBCLASS	CLAIMED	NON-CLAIMED
		H 0 4 N 19 / 50 (2014.01.01)	

CROSS REFERENCE(S)					
CLASS	SUBCLASS (ONE SUBCLASS PER BLOCK)				

NONE (Assistant Examiner)	(Date)	**Total Claims Allowed:** 26	
/PETER D LE/ Primary Examiner.Art Unit 2488 (Primary Examiner)	09/04/2017 (Date)	O.G. Print Claim(s) 1	O.G. Print Figure 10

U.S. Patent and Trademark Office

Part of Paper No. 20170904

Issue Classification	Application/Control No.	Applicant(s)/Patent Under Reexamination
	15490469	UGUR ET AL.
	Examiner	**Art Unit**
	PETER D LE	2488

☒ Claims renumbered in the same order as presented by applicant ☐ CPA ☒ T.D. ☐ R.1.47

Final	Original	Final	Original	Final	Original	Final	Original	Final	Original	Final	Original	Final	Original	Final	Original
	1		17												
	2		18												
	3		19												
	4		20												
	5		21												
	6		22												
	7		23												
	8		24												
	9		25												
	10		26												
	11														
	12														
	13														
	14														
	15														
	16														

NONE (Assistant Examiner)	(Date)	**Total Claims Allowed:** 26	
/PETER D LE/ Primary Examiner.Art Unit 2488 (Primary Examiner)	09/04/2017 (Date)	O.G. Print Claim(s) 1	O.G. Print Figure 10

U.S. Patent and Trademark Office

Part of Paper No. 20170904

Search Notes	Application/Control No.	Applicant(s)/Patent Under Reexamination
	15490469	UGUR ET AL.
	Examiner	**Art Unit**
	PETER D LE	2488

CPC- SEARCHED		
Symbol	**Date**	**Examiner**
Update Search from Cases: 13/344893; 15/250124	9/4/2017	PL

CPC COMBINATION SETS - SEARCHED		
Symbol	**Date**	**Examiner**

US CLASSIFICATION SEARCHED			
Class	**Subclass**	**Date**	**Examiner**

* See search history printout included with this form or the SEARCH NOTES box below to determine the scope of the search.

SEARCH NOTES		
Search Notes	**Date**	**Examiner**
See EAST Search History; Ref. Cases: 13/344893; 15/250124	9/4/2017	PL

INTERFERENCE SEARCH			
US Class/ CPC Symbol	**US Subclass / CPC Group**	**Date**	**Examiner**
	Limit to Text Search	9/4/2017	PL

Nokia Exhibit 2013, p.36
ASUS v. Nokia
IPR2025-01154

Doc Code: DIST.E.FILE Document Description: Electronic Terminal Disclaimer - Filed	PTO/SB/26 U.S. Patent and Trademark Office Department of Commerce

Electronic Petition Request	**TERMINAL DISCLAIMER TO OBVIATE A DOUBLE PATENTING REJECTION OVER A "PRIOR" PATENT**
Application Number	15490469
Filing Date	18-Apr-2017
First Named Inventor	Kemal UGUR
Attorney Docket Number	042933/496984
Title of Invention	MOTION PREDICTION IN VIDEO CODING

☒ Filing of terminal disclaimer does not obviate requirement for response under 37 CFR 1.111 to outstanding Office Action

☒ This electronic Terminal Disclaimer is not being used for a Joint Research Agreement.

Owner	Percent Interest
NOKIA TECHNOLOGIES OY	100%

The owner(s) with percent interest listed above in the instant application hereby disclaims, except as provided below, the terminal part of the statutory term of any patent granted on the instant application which would extend beyond the expiration date of the full statutory term of prior patent number(s)

9628816

9432693

as the term of said prior patent is presently shortened by any terminal disclaimer. The owner hereby agrees that any patent so granted on the instant application shall be enforceable only for and during such period that it and the prior patent are commonly owned. This agreement runs with any patent granted on the instant application and is binding upon the grantee, its successors or assigns.

In making the above disclaimer, the owner does not disclaim the terminal part of the term of any patent granted on the instant application that would extend to the expiration date of the full statutory term of the prior patent, "as the term of said prior patent is presently shortened by any terminal disclaimer," in the event that said prior patent later:
- expires for failure to pay a maintenance fee;
- is held unenforceable;
- is found invalid by a court of competent jurisdiction;
- is statutorily disclaimed in whole or terminally disclaimed under 37 CFR 1.321;
- has all claims canceled by a reexamination certificate;
- is reissued; or
- is in any manner terminated prior to the expiration of its full statutory term as presently shortened by any terminal disclaimer.

◉ Terminal disclaimer fee under 37 CFR 1.20(d) is included with Electronic Terminal Disclaimer request. ○ I certify, in accordance with 37 CFR 1.4(d)(4), that the terminal disclaimer fee under 37 CFR 1.20(d) required for this terminal disclaimer has already been paid in the above-identified application.	
Applicant claims the following fee status: ○ Small Entity ○ Micro Entity ◉ Regular Undiscounted I hereby declare that all statements made herein of my own knowledge are true and that all statements made on information and belief are believed to be true; and further that these statements were made with the knowledge that willful false statements and the like so made are punishable by fine or imprisonment, or both, under Section 1001 of Title 18 of the United States Code and that such willful false statements may jeopardize the validity of the application or any patent issued thereon.	
THIS PORTION MUST BE COMPLETED BY THE SIGNATORY OR SIGNATORIES I certify, in accordance with 37 CFR 1.4(d)(4) that I am: ◉ An attorney or agent registered to practice before the Patent and Trademark Office who is of record in this application Registration Number 34610 ○ A sole inventor ○ A joint inventor; I certify that I am authorized to sign this submission on behalf of all of the inventors as evidenced by the power of attorney in the application ○ A joint inventor; all of whom are signing this request	
Signature	/Guy R. Gosnell/
Name	/Guy R. Gosnell

*Statement under 37 CFR 3.73(b) is required if terminal disclaimer is signed by the assignee (owner).
Form PTO/SB/96 may be used for making this certification. See MPEP § 324.

Electronic Patent Application Fee Transmittal

Application Number:	15490469
Filing Date:	18-Apr-2017
Title of Invention:	MOTION PREDICTION IN VIDEO CODING
First Named Inventor/Applicant Name:	Kemal UGUR
Filer:	Guy Randall Gosnell/Angela Mullis
Attorney Docket Number:	042933/496984

Filed as Large Entity

Filing Fees for Utility under 35 USC 111(a)

Description	Fee Code	Quantity	Amount	Sub-Total in USD($)
Basic Filing:				
STATUTORY OR TERMINAL DISCLAIMER	1814	1	160	160
Pages:				
Claims:				
Miscellaneous-Filing:				
Petition:				
Patent-Appeals-and-Interference:				
Post-Allowance-and-Post-Issuance:				

Description	Fee Code	Quantity	Amount	Sub-Total in USD($)
Extension-of-Time:				
Miscellaneous:				
		Total in USD ($)		**160**

Doc Code: DISQ.E.FILE
Document Description: Electronic Terminal Disclaimer – Approved

Application No.: 15490469

Filing Date: 18-Apr-2017

Applicant/Patent under Reexamination: UGUR

Electronic Terminal Disclaimer filed on September 1, 2017

☒ APPROVED

This patent is subject to a terminal disclaimer

☐ DISAPPROVED

Approved/Disapproved by: Electronic Terminal Disclaimer automatically approved by EFS-Web

U.S. Patent and Trademark Office

Electronic Acknowledgement Receipt	
EFS ID:	30248127
Application Number:	15490469
International Application Number:	
Confirmation Number:	5040
Title of Invention:	MOTION PREDICTION IN VIDEO CODING
First Named Inventor/Applicant Name:	Kemal UGUR
Customer Number:	10949
Filer:	Guy Randall Gosnell/Angela Mullis
Filer Authorized By:	Guy Randall Gosnell
Attorney Docket Number:	042933/496984
Receipt Date:	01-SEP-2017
Filing Date:	18-APR-2017
Time Stamp:	08:19:56
Application Type:	Utility under 35 USC 111(a)

Payment information:

Submitted with Payment	yes
Payment Type	DA
Payment was successfully received in RAM	$160
RAM confirmation Number	090117INTEFSW00007938160605
Deposit Account	
Authorized User	
The Director of the USPTO is hereby authorized to charge indicated fees and credit any overpayment as follows:	

File Listing:

Document Number	Document Description	File Name	File Size(Bytes)/ Message Digest	Multi Part /.zip	Pages (if appl.)
1	Terminal Disclaimer-Filed (Electronic)	eTerminal-Disclaimer.pdf	33505 079f8167dbf62f3741bc2470b2e7c2275bf0c799	no	2
Warnings:					
Information:					
2	Fee Worksheet (SB06)	fee-info.pdf	30398 8b8b786c10b61b85fe8a5b2b8ecfdab88b6f1450	no	2
Warnings:					
Information:					
		Total Files Size (in bytes):	63903		

This Acknowledgement Receipt evidences receipt on the noted date by the USPTO of the indicated documents, characterized by the applicant, and including page counts, where applicable. It serves as evidence of receipt similar to a Post Card, as described in MPEP 503.

New Applications Under 35 U.S.C. 111
If a new application is being filed and the application includes the necessary components for a filing date (see 37 CFR 1.53(b)-(d) and MPEP 506), a Filing Receipt (37 CFR 1.54) will be issued in due course and the date shown on this Acknowledgement Receipt will establish the filing date of the application.
National Stage of an International Application under 35 U.S.C. 371
If a timely submission to enter the national stage of an international application is compliant with the conditions of 35 U.S.C. 371 and other applicable requirements a Form PCT/DO/EO/903 indicating acceptance of the application as a national stage submission under 35 U.S.C. 371 will be issued in addition to the Filing Receipt, in due course.
New International Application Filed with the USPTO as a Receiving Office
If a new international application is being filed and the international application includes the necessary components for an international filing date (see PCT Article 11 and MPEP 1810), a Notification of the International Application Number and of the International Filing Date (Form PCT/RO/105) will be issued in due course, subject to prescriptions concerning national security, and the date shown on this Acknowledgement Receipt will establish the international filing date of the application.

UNITED STATES PATENT AND TRADEMARK OFFICE

UNITED STATES DEPARTMENT OF COMMERCE
United States Patent and Trademark Office
Address: COMMISSIONER FOR PATENTS
P.O. Box 1450
Alexandria, Virginia 22313-1450
www.uspto.gov

APPLICATION NUMBER	FILING OR 371(C) DATE	FIRST NAMED APPLICANT	ATTY. DOCKET NO./TITLE
15/490,469	04/18/2017	Kemal UGUR	042933/496984

CONFIRMATION NO. 5040

PUBLICATION NOTICE

OC000000093218776

10949
Nokia Corporation and Alston & Bird LLP
c/o Alston & Bird LLP
Bank of America Plaza, 101 South Tryon Street
Suite 4000
Charlotte, NC 28280-4000

Title:MOTION PREDICTION IN VIDEO CODING

Publication No.US-2017-0223373-A1
Publication Date:08/03/2017

NOTICE OF PUBLICATION OF APPLICATION

The above-identified application will be electronically published as a patent application publication pursuant to 37 CFR 1.211, et seq. The patent application publication number and publication date are set forth above.

The publication may be accessed through the USPTO's publically available Searchable Databases via the Internet at www.uspto.gov. The direct link to access the publication is currently http://www.uspto.gov/patft/.

The publication process established by the Office does not provide for mailing a copy of the publication to applicant. A copy of the publication may be obtained from the Office upon payment of the appropriate fee set forth in 37 CFR 1.19(a)(1). Orders for copies of patent application publications are handled by the USPTO's Public Records Division. The Public Records Division can be reached by telephone at (571) 272-3150 or (800) 972-6382, by facsimile at (571) 273-3250, by mail addressed to the United States Patent and Trademark Office, Public Records Division, Alexandria, VA 22313-1450 or via the Internet.

In addition, information on the status of the application, including the mailing date of Office actions and the dates of receipt of correspondence filed in the Office, may also be accessed via the Internet through the Patent Electronic Business Center at www.uspto.gov using the public side of the Patent Application Information and Retrieval (PAIR) system. The direct link to access this status information is currently https://portal.uspto.gov/pair/PublicPair. Prior to publication, such status information is confidential and may only be obtained by applicant using the private side of PAIR.

Further assistance in electronically accessing the publication, or about PAIR, is available by calling the Patent Electronic Business Center at 1-866-217-9197.

Office of Data Managment, Application Assistance Unit (571) 272-4000, or (571) 272-4200, or 1-888-786-0101

Nokia Exhibit 2013, p.44
ASUS v. Nokia
IPR2025-01154

Substitute for form SB08				Complete if Known	
INFORMATION DISCLOSURE STATEMENT BY APPLICANT *(Use as many sheets as necessary)*				Application Number	15/490,469
				Filing Date	April 18, 2017
				First Named Inventor	Ugur et al.
				Art Unit	2488
				Examiner Name	Peter D. Le
Sheet	1	of	2	Attorney Docket Number	042933/496984

U. S. PATENT DOCUMENTS

Examiner Initials*	Cite No.	Document Number Number - Kind Code (if known)	Publication Date MM-DD-YYYY	Name of Patentee or Applicant of Cited Document	Pages, Columns, Lines, Where Relevant Passages of Relevant Figures Appear
	1	US-6,512,523	01-28-2003	Gross	
	2	US-6,539,058	03-25-2003	Pearlstein et al.	
	3	US-2008/0089417 A1	04-17-2008	Bao et al.	
	4	US-2009/0087111 A1	04-02-2009	Noda et al.	
	5	US-2009/0257503 A1	10-15-2009	Ye et al.	
	6	US-2010/0002770 A1	01-07-2010	Motta et al.	
	7	US-2010/0086027 A1	04-08-2010	Panchal et al.	
	8	US-2010/0111182 A1	05-06-2010	Karczewicz et al.	
	9	US-2013/0142262 A1	06-06-2013	Ye et al.	

FOREIGN PATENT DOCUMENTS

Examiner Initials	Cite No.	Country Code - Number Kind Code (if known)	Publication Date MM-DD-YYYY	Name of Patentee or Applicant of Cited Document	Pages, Columns, Lines, Where Relevant Passages or Relevant Figures Appear	English Language Translation Attached
	10	CA 2729615 A1	01-07-2010	Kabushiki Kaisha Toshiba		
	11	WO 2008/048864 A2	04-24-2008	Qualcomm Inc.		

OTHER DOCUMENTS

Examiner Initials*	Cite No.	Include name of the author (in CAPITAL LETTERS), title of the article (when appropriate), title of the item (book, magazine, journal, serial, symposium, catalog, etc.), date, page(s) , volume-issue number(s), publisher, city and/or country where published.	English Language Translation Attached
	12	"Advanced Video Coding for Generic Audiovisual Services", Series H: Audiovisual And Multimedia Systems, Infrastructure of audiovisual services — Coding of moving video, ITU-T Recommendation H.264, November, 2007, 564 pages	
	13	UGUR et al., "High precision bi-directional averaging", Joint CollaborativeTeam on Video Coding (JCT.VC) of ITV-T WP3 and ISO/IEC JTC1/SC29NVG11, 4th Meeting, January 20-28, 2011, pp. 1-3	
	14	UGUR et al., "On clipping in bi-directional averaging", Joint Collaborative Team on Video Coding (JCT-VC) of ITU-T WP3 and ISO/IEC JTC1/SC29/WG11, 5th Meeting, March 16-23, 2011, pp. 1-4	

Examiner Signature		Date Considered	

*Examiner: Initial if reference considered, whether or not citation is in conformance with MPEP 609. Draw line through citation if not in conformance and not considered. Include copy of this form with next communication to applicant.

Submitted May 8, 2017

Substitute for form SB08				Complete if Known	
INFORMATION DISCLOSURE STATEMENT BY APPLICANT *(Use as many sheets as necessary)*				Application Number	15/490,469
				Filing Date	April 18, 2017
				First Named Inventor	Ugur et al.
				Art Unit	2488
				Examiner Name	Peter D. Le
Sheet	2	of	2	Attorney Docket Number	042933/496984

OTHER DOCUMENTS

Examiner Initials*	Cite No.	Include name of the author (in CAPITAL LETTERS), title of the article (when appropriate), title of the item (book, magazine, journal, serial, symposium, catalog, etc.), date, page(s) , volume-issue number(s), publisher, city and/or country where published.	English Language Translation Attached
	15	YE et al., "High Precision Interpolation and Prediction"; 35 VCEG Meeting; 85. MPEG Meeting; July 16, 2008 - July 18, 2008; Berlin; Video Coding Experts Group of ITU-T SG.16; No. VCEG-AI33; July 12, 2008; XP030003598	
	16	YI-JEN CHIU et al.: "TE1: Fast Techniques to Improve Self Derivation of Motion Estimation"; JCT-VC Meeting; July 21, 2010 - July 28, 2010; Geneva; Joint Collaborative Team on Video Coding of ISO/IEC JTC1/SC29/WG11 and ITU-T SG.16; July 28, 2010; XP030007627	
	17	International Search Report and Written Opinion received for corresponding Patent Cooperation Treaty Application No. PCT/IB2012/050089 dated May 09, 2012, 14 page	
	18	Office Action from Korean Patent Application No. 2013-7020731, dated July 31, 2014	
	19	Office Action from Russian Patent Application No. 2013136693, dated November 28, 2014	
	20	Office Action from Korean Patent Application No. 2013-7020731, dated August 26, 2015	
	21	Extended European Search Report from corresponding European Patent Application No. 12731927.5 dated May 6, 2016	
	22	Office Action from Vietnamese Patent Application No. 1-2013-02120 dated January 23, 2017, with English Language translation, 2 pages.	
	23	Office Action for Chinese Patent Application No. 2012800096959 dated March 20, 2017, with English summary, 7 pages.	
	24	Non-Final Office Action for U.S. Patent Application No. 13/344,893 dated July 16, 2014, 24 pages.	
	25	Final Office Action for U.S. Patent Application No. 13/344,893 dated January 23, 2015, 20 pages.	
	26	Non-Final Office Action for U.S. Patent Application No. 13/344,893 dated July 28, 2015, 17 pages.	
	27	Notice of Allowance for U.S. Patent Application No. 13/344,893 dated April 27, 2016, 20 pages.	
	28	Notice of Allowance for U.S. Patent Application No. 15/250,124 dated December 13, 2016, 13 pages.	

Examiner Signature		Date Considered	

*Examiner: Initial if reference considered, whether or not citation is in conformance with MPEP 609. Draw line through citation if not in conformance and not considered. Include copy of this form with next communication to applicant.

Submitted May 8, 2017

Electronic Acknowledgement Receipt

EFS ID:	29145538
Application Number:	15490469
International Application Number:	
Confirmation Number:	5040
Title of Invention:	MOTION PREDICTION IN VIDEO CODING
First Named Inventor/Applicant Name:	Kemal UGUR
Customer Number:	10949
Filer:	Christopher Jason Gegg/Dennis Avery
Filer Authorized By:	Christopher Jason Gegg
Attorney Docket Number:	042933/496984
Receipt Date:	08-MAY-2017
Filing Date:	18-APR-2017
Time Stamp:	16:10:37
Application Type:	Utility under 35 USC 111(a)

Payment information:

Submitted with Payment	no

File Listing:

Document Number	Document Description	File Name	File Size(Bytes)/ Message Digest	Multi Part /.zip	Pages (if appl.)
1	Transmittal Letter	496984US_IDS_Letter_05-08-2017.pdf	93591 504ef26459a2c163ebc27c4c6e24765e539c8ebb	no	1

Warnings:

Information:					
2	Information Disclosure Statement (IDS) Form (SB08)	496984US_IDS_List_05-08-2017.pdf	168129 842294f9cf64cadbaadc7ce1dbe8e84c0300b3f2	no	2
Warnings:					
Information:					
This is not an USPTO supplied IDS fillable form					
3	Non Patent Literature	496984US_NPL_CN2012800096959_OA_03-20-2017.pdf	456550 2e041bc4083d64ac416697062b14995e0b046838	no	7
Warnings:					
Information:					
			Total Files Size (in bytes):	718270	

This Acknowledgement Receipt evidences receipt on the noted date by the USPTO of the indicated documents, characterized by the applicant, and including page counts, where applicable. It serves as evidence of receipt similar to a Post Card, as described in MPEP 503.

<u>New Applications Under 35 U.S.C. 111</u>
If a new application is being filed and the application includes the necessary components for a filing date (see 37 CFR 1.53(b)-(d) and MPEP 506), a Filing Receipt (37 CFR 1.54) will be issued in due course and the date shown on this Acknowledgement Receipt will establish the filing date of the application.
<u>National Stage of an International Application under 35 U.S.C. 371</u>
If a timely submission to enter the national stage of an international application is compliant with the conditions of 35 U.S.C. 371 and other applicable requirements a Form PCT/DO/EO/903 indicating acceptance of the application as a national stage submission under 35 U.S.C. 371 will be issued in addition to the Filing Receipt, in due course.
<u>New International Application Filed with the USPTO as a Receiving Office</u>
If a new international application is being filed and the international application includes the necessary components for an international filing date (see PCT Article 11 and MPEP 1810), a Notification of the International Application Number and of the International Filing Date (Form PCT/RO/105) will be issued in due course, subject to prescriptions concerning national security, and the date shown on this Acknowledgement Receipt will establish the international filing date of the application.

Attorney's Docket No. 042933/496984 PATENT

IN THE UNITED STATES PATENT AND TRADEMARK OFFICE

In re:	Ugur et al.	Confirmation No.:	5040
Appl. No.:	15/490,469	Art Unit:	2488
Filed:	April 18, 2017	Examiner:	Peter D. Le
For:	MOTION PREDICTION IN VIDEO CODING		

Commissioner for Patents
P.O. Box 1450
Alexandria, VA 22313-1450

INFORMATION DISCLOSURE STATEMENT
CITATION UNDER 37 C.F.R. § 1.97

Attached is a list of documents on form PTO-1449.

It is requested that the Examiner consider these documents and officially make them of record in accordance with the provisions of 37 C.F.R. § 1.97 and Section 609 of the MPEP. By identifying the listed documents, Applicant in no way makes any admission as to the prior art status of the listed documents, but is instead identifying the listed documents for the sake of full disclosure.

Any foreign patents or non-patent literature documents items are attached, except those that were supplied in, or cited by the Office during prosecution of, parent Application No. 15/250,124 filed August 29, 2016. Since the benefit of this application was claimed under 35 U.S.C. 120, no copies need to be furnished in accordance with 37 C.F.R. 1.98(d); however, copies will be furnished on request.

Respectfully submitted,

/Guy R. Gosnell/

Guy R. Gosnell
Registration No. 34,610

Customer No. 10949
ALSTON & BIRD LLP
Bank of America Plaza
101 South Tryon Street, Suite 4000
Charlotte, NC 28280-4000
Tel Charlotte Office (704) 444-1000
Fax Charlotte Office (704) 444-1111

ELECTRONICALLY FILED USING THE EFS-WEB ELECTRONIC FILING SYSTEM OF THE UNITED STATES PATENT & TRADEMARK OFFICE ON May 8, 2017.

PATENT APPLICATION FEE DETERMINATION RECORD Substitute for Form PTO-875	Application or Docket Number 15/490,469

APPLICATION AS FILED - PART I

FOR	(Column 1) NUMBER FILED	(Column 2) NUMBER EXTRA	SMALL ENTITY RATE($)	SMALL ENTITY FEE($)	OR	OTHER THAN SMALL ENTITY RATE($)	OTHER THAN SMALL ENTITY FEE($)
BASIC FEE (37 CFR 1.16(a), (b), or (c))	N/A	N/A	N/A			N/A	280
SEARCH FEE (37 CFR 1.16(k), (i), or (m))	N/A	N/A	N/A			N/A	600
EXAMINATION FEE (37 CFR 1.16(o), (p), or (q))	N/A	N/A	N/A			N/A	720
TOTAL CLAIMS (37 CFR 1.16(i))	26 minus 20=	* 6			OR	x 80 =	480
INDEPENDENT CLAIMS (37 CFR 1.16(h))	5 minus 3 =	* 2				x 420 =	840
APPLICATION SIZE FEE (37 CFR 1.16(s))	If the specification and drawings exceed 100 sheets of paper, the application size fee due is $310 ($155 for small entity) for each additional 50 sheets or fraction thereof. See 35 U.S.C. 41(a)(1)(G) and 37 CFR 1.16(s).						0.00
MULTIPLE DEPENDENT CLAIM PRESENT (37 CFR 1.16(j))							0.00
* If the difference in column 1 is less than zero, enter "0" in column 2.			TOTAL			TOTAL	2920

APPLICATION AS AMENDED - PART II

		(Column 1) CLAIMS REMAINING AFTER AMENDMENT		(Column 2) HIGHEST NUMBER PREVIOUSLY PAID FOR	(Column 3) PRESENT EXTRA	SMALL ENTITY RATE($)	SMALL ENTITY ADDITIONAL FEE($)	OR	OTHER THAN SMALL ENTITY RATE($)	OTHER THAN SMALL ENTITY ADDITIONAL FEE($)
AMENDMENT A	Total (37 CFR 1.16(i))	*	Minus	**	=	x =		OR	x =	
AMENDMENT A	Independent (37 CFR 1.16(h))	*	Minus	***	=	x =		OR	x =	
AMENDMENT A	Application Size Fee (37 CFR 1.16(s))									
AMENDMENT A	FIRST PRESENTATION OF MULTIPLE DEPENDENT CLAIM (37 CFR 1.16(j))							OR		
						TOTAL ADD'L FEE		OR	TOTAL ADD'L FEE	

		(Column 1) CLAIMS REMAINING AFTER AMENDMENT		(Column 2) HIGHEST NUMBER PREVIOUSLY PAID FOR	(Column 3) PRESENT EXTRA	RATE($)	ADDITIONAL FEE($)		RATE($)	ADDITIONAL FEE($)
AMENDMENT B	Total (37 CFR 1.16(i))	*	Minus	**	=	x =		OR	x =	
AMENDMENT B	Independent (37 CFR 1.16(h))	*	Minus	***	=	x =		OR	x =	
AMENDMENT B	Application Size Fee (37 CFR 1.16(s))									
AMENDMENT B	FIRST PRESENTATION OF MULTIPLE DEPENDENT CLAIM (37 CFR 1.16(j))							OR		
						TOTAL ADD'L FEE		OR	TOTAL ADD'L FEE	

* If the entry in column 1 is less than the entry in column 2, write "0" in column 3.
** If the "Highest Number Previously Paid For" IN THIS SPACE is less than 20, enter "20".
*** If the "Highest Number Previously Paid For" IN THIS SPACE is less than 3, enter "3".
The "Highest Number Previously Paid For" (Total or Independent) is the highest found in the appropriate box in column 1.

UNITED STATES PATENT AND TRADEMARK OFFICE

UNITED STATES DEPARTMENT OF COMMERCE
United States Patent and Trademark Office
Address: COMMISSIONER FOR PATENTS
P.O. Box 1450
Alexandria, Virginia 22313-1450
www.uspto.gov

APPLICATION NUMBER	FILING or 371(c) DATE	GRP ART UNIT	FIL FEE REC'D	ATTY.DOCKET.NO	TOT CLAIMS	IND CLAIMS
15/490,469	04/18/2017	2482	2920	042933/496984	26	5

CONFIRMATION NO. 5040

FILING RECEIPT

10949
Nokia Corporation and Alston & Bird LLP
c/o Alston & Bird LLP
Bank of America Plaza, 101 South Tryon Street
Suite 4000
Charlotte, NC 28280-4000

Date Mailed: 04/27/2017

Receipt is acknowledged of this non-provisional patent application. The application will be taken up for examination in due course. Applicant will be notified as to the results of the examination. Any correspondence concerning the application must include the following identification information: the U.S. APPLICATION NUMBER, FILING DATE, NAME OF APPLICANT, and TITLE OF INVENTION. Fees transmitted by check or draft are subject to collection. Please verify the accuracy of the data presented on this receipt. **If an error is noted on this Filing Receipt, please submit a written request for a Filing Receipt Correction. Please provide a copy of this Filing Receipt with the changes noted thereon. If you received a "Notice to File Missing Parts" for this application, please submit any corrections to this Filing Receipt with your reply to the Notice. When the USPTO processes the reply to the Notice, the USPTO will generate another Filing Receipt incorporating the requested corrections**

Inventor(s)

Kemal UGUR, Tampere, FINLAND;
Jani LAINEMA, Tampere, FINLAND;
Antti HALLAPURO, Tampere, FINLAND;

Applicant(s)

Nokia Technologies Oy, Espoo, FINLAND;

Power of Attorney: The patent practitioners associated with Customer Number 10949

Domestic Priority data as claimed by applicant

This application is a CON of 15/250,124 08/29/2016 PAT 9628816
which is a CON of 13/344,893 01/06/2012 PAT 9432693
which claims benefit of 61/430,694 01/07/2011

Foreign Applications for which priority is claimed (You may be eligible to benefit from the **Patent Prosecution Highway** program at the USPTO. Please see http://www.uspto.gov for more information.) - None.
Foreign application information must be provided in an Application Data Sheet in order to constitute a claim to foreign priority. See 37 CFR 1.55 and 1.76.

Permission to Access Application via Priority Document Exchange: Yes

Permission to Access Search Results: Yes

Applicant may provide or rescind an authorization for access using Form PTO/SB/39 or Form PTO/SB/69 as appropriate.

If Required, Foreign Filing License Granted: 04/25/2017

The country code and number of your priority application, to be used for filing abroad under the Paris Convention, is **US 15/490,469**

Projected Publication Date: 08/03/2017

Non-Publication Request: No

Early Publication Request: No
Title

MOTION PREDICTION IN VIDEO CODING

Preliminary Class

375

Statement under 37 CFR 1.55 or 1.78 for AIA (First Inventor to File) Transition Applications: No

PROTECTING YOUR INVENTION OUTSIDE THE UNITED STATES

Since the rights granted by a U.S. patent extend only throughout the territory of the United States and have no effect in a foreign country, an inventor who wishes patent protection in another country must apply for a patent in a specific country or in regional patent offices. Applicants may wish to consider the filing of an international application under the Patent Cooperation Treaty (PCT). An international (PCT) application generally has the same effect as a regular national patent application in each PCT-member country. The PCT process **simplifies** the filing of patent applications on the same invention in member countries, but **does not result** in a grant of "an international patent" and does not eliminate the need of applicants to file additional documents and fees in countries where patent protection is desired.

Almost every country has its own patent law, and a person desiring a patent in a particular country must make an application for patent in that country in accordance with its particular laws. Since the laws of many countries differ in various respects from the patent law of the United States, applicants are advised to seek guidance from specific foreign countries to ensure that patent rights are not lost prematurely.

Applicants also are advised that in the case of inventions made in the United States, the Director of the USPTO must issue a license before applicants can apply for a patent in a foreign country. The filing of a U.S. patent application serves as a request for a foreign filing license. The application's filing receipt contains further information and guidance as to the status of applicant's license for foreign filing.

Applicants may wish to consult the USPTO booklet, "General Information Concerning Patents" (specifically, the section entitled "Treaties and Foreign Patents") for more information on timeframes and deadlines for filing foreign patent applications. The guide is available either by contacting the USPTO Contact Center at 800-786-9199, or it can be viewed on the USPTO website at http://www.uspto.gov/web/offices/pac/doc/general/index.html.

For information on preventing theft of your intellectual property (patents, trademarks and copyrights), you may wish to consult the U.S. Government website, http://www.stopfakes.gov. Part of a Department of Commerce initiative, this website includes self-help "toolkits" giving innovators guidance on how to protect intellectual property in specific countries such as China, Korea and Mexico. For questions regarding patent enforcement issues, applicants may call the U.S. Government hotline at 1-866-999-HALT (1-866-999-4258).

Nokia Exhibit 2013, p.52
ASUS v. Nokia
IPR2025-01154

LICENSE FOR FOREIGN FILING UNDER

Title 35, United States Code, Section 184

Title 37, Code of Federal Regulations, 5.11 & 5.15

GRANTED

The applicant has been granted a license under 35 U.S.C. 184, if the phrase "IF REQUIRED, FOREIGN FILING LICENSE GRANTED" followed by a date appears on this form. Such licenses are issued in all applications where the conditions for issuance of a license have been met, regardless of whether or not a license may be required as set forth in 37 CFR 5.15. The scope and limitations of this license are set forth in 37 CFR 5.15(a) unless an earlier license has been issued under 37 CFR 5.15(b). The license is subject to revocation upon written notification. The date indicated is the effective date of the license, unless an earlier license of similar scope has been granted under 37 CFR 5.13 or 5.14.

This license is to be retained by the licensee and may be used at any time on or after the effective date thereof unless it is revoked. This license is automatically transferred to any related applications(s) filed under 37 CFR 1.53(d). This license is not retroactive.

The grant of a license does not in any way lessen the responsibility of a licensee for the security of the subject matter as imposed by any Government contract or the provisions of existing laws relating to espionage and the national security or the export of technical data. Licensees should apprise themselves of current regulations especially with respect to certain countries, of other agencies, particularly the Office of Defense Trade Controls, Department of State (with respect to Arms, Munitions and Implements of War (22 CFR 121-128)); the Bureau of Industry and Security, Department of Commerce (15 CFR parts 730-774); the Office of Foreign AssetsControl, Department of Treasury (31 CFR Parts 500+) and the Department of Energy.

NOT GRANTED

No license under 35 U.S.C. 184 has been granted at this time, if the phrase "IF REQUIRED, FOREIGN FILING LICENSE GRANTED" DOES NOT appear on this form. Applicant may still petition for a license under 37 CFR 5.12, if a license is desired before the expiration of 6 months from the filing date of the application. If 6 months has lapsed from the filing date of this application and the licensee has not received any indication of a secrecy order under 35 U.S.C. 181, the licensee may foreign file the application pursuant to 37 CFR 5.15(b).

SelectUSA

The United States represents the largest, most dynamic marketplace in the world and is an unparalleled location for business investment, innovation, and commercialization of new technologies. The U.S. offers tremendous resources and advantages for those who invest and manufacture goods here. Through SelectUSA, our nation works to promote and facilitate business investment. SelectUSA provides information assistance to the international investor community; serves as an ombudsman for existing and potential investors; advocates on behalf of U.S. cities, states, and regions competing for global investment; and counsels U.S. economic development organizations on investment attraction best practices. To learn more about why the United States is the best country in the world to develop technology, manufacture products, deliver services, and grow your business, visit http://www.SelectUSA.gov or call +1-202-482-6800.

Nokia Exhibit 2013, p.53
ASUS v. Nokia
IPR2025-01154

Doc Code: PA..
Document Description: Power of Attorney

PTO/AIA/82A (07-13)
Approved for use through 11/30/2014. OMB 0651-0051
U.S. Patent and Trademark Office; U.S. DEPARTMENT OF COMMERCE
Under the Paperwork Reduction Act of 1995, no persons are required to respond to a collection of information unless it displays a valid OMB control number.

TRANSMITTAL FOR POWER OF ATTORNEY TO ONE OR MORE REGISTERED PRACTITIONERS

NOTE: This form is to be submitted with the Power of Attorney by Applicant form (PTO/AIA/82B) to identify the application to which the Power of Attorney is directed, in accordance with 37 CFR 1.5, unless the application number and filing date are identified in the Power of Attorney by Applicant form. If neither form PTO/AIA/82A nor form PTO/AIA82B identifies the application to which the Power of Attorney is directed, the Power of Attorney will not be recognized in the application.

Application Number	TO BE ASSIGNED
Filing Date	Concurrently Herewith
First Named Inventor	Kemal UGUR et al.
Title	MOTION PREDICTION IN VIDEO CODING
Art Unit	
Examiner Name	
Attorney Docket Number	042933/496984

SIGNATURE of Applicant or Patent Practitioner

Signature	/Guy R. Gosnell/	Date (Optional)	04/18/2017
Name	Guy R. Gosnell	Registration Number	34,610
Title (if Applicant is a juristic entity)	Patent Practitioner		
Applicant Name (if Applicant is a juristic entity)	NOKIA TECHNOLOGIES OY		

NOTE: This form must be signed in accordance with 37 CFR 1.33. See 37 CFR 1.4(d) for signature requirements and certifications. If more than one applicant, use multiple forms.

☐ *Total of _____ forms are submitted.

This collection of information is required by 37 CFR 1.131, 1.32, and 1.33. The information is required to obtain or retain a benefit by the public which is to file (and by the USPTO to process) an application. Confidentiality is governed by 35 U.S.C. 122 and 37 CFR 1.11 and 1.14. This collection is estimated to take 3 minutes to complete, including gathering, preparing, and submitting the completed application form to the USPTO. Time will vary depending upon the individual case. Any comments on the amount of time you require to complete this form and/or suggestions for reducing this burden, should be sent to the Chief Information Officer, U.S. Patent and Trademark Office, U.S. Department of Commerce, P.O. Box 1450, Alexandria, VA 22313-1450. DO NOT SEND FEES OR COMPLETED FORMS TO THIS ADDRESS. **SEND TO: Commissioner for Patents, P.O. Box 1450, Alexandria, VA 22313-1450.**

If you need assistance in completing the form, call 1-800-PTO-9199 and select option 2.

Doc Code: PA..
Document Description: Power of Attorney

PTO/AIA/82B (07-13)
Approved for use through 11/30/2014. OMB 0651-0051
U.S. Patent and Trademark Office; U.S. DEPARTMENT OF COMMERCE
Under the Paperwork Reduction Act of 1995, no persons are required to respond to a collection of information unless it displays a valid OMB control number

POWER OF ATTORNEY BY APPLICANT

I hereby revoke all previous powers of attorney given in the application identified in either the attached transmittal letter or the boxes below.

Application Number	Filing Date

(Note: The boxes above may be left blank if information is provided on form PTO/AIA/82A.)

☑ I hereby appoint the Patent Practitioner(s) associated with the following Customer Number as my/our attorney(s) or agent(s), and to transact all business in the United States Patent and Trademark Office connected therewith for the application referenced in the attached transmittal letter (form PTO/AIA/82A) or identified above: 10949

OR

☐ I hereby appoint Practitioner(s) named in the attached list (form PTO/AIA/82C) as my/our attorney(s) or agent(s), and to transact all business in the United States Patent and Trademark Office connected therewith for the patent application referenced in the attached transmittal letter (form PTO/AIA/82A) or identified above. (Note: Complete form PTO/AIA/82C.)

Please recognize or change the correspondence address for the application identified in the attached transmittal letter or the boxes above to:

☑ The address associated with the above-mentioned Customer Number

OR

☐ The address associated with Customer Number:

OR

Firm or Individual Name					
Address					
City		State		Zip	
Country					
Telephone		Email			

I am the Applicant (if the Applicant is a juristic entity, list the Applicant name in the box):

NOKIA TECHNOLOGIES OY

☐ Inventor or Joint Inventor (title not required below)

☐ Legal Representative of a Deceased or Legally Incapacitated Inventor (title not required below)

☑ Assignee or Person to Whom the Inventor is Under an Obligation to Assign (provide signer's title if applicant is a juristic entity)

☐ Person Who Otherwise Shows Sufficient Proprietary Interest (e.g., a petition under 37 CFR 1.46(b)(2) was granted in the application or is concurrently being filed with this document) (provide signer's title if applicant is a juristic entity)

SIGNATURE of Applicant for Patent

The undersigned (whose title is supplied below) is authorized to act on behalf of the applicant (e.g., where the applicant is a juristic entity).

Signature	[signature]	Date (Optional)	23 January 2015
Name	Harri [illegible]		
Title	Director [illegible] Legal and Intellectual Property		

NOTE: Signature - This form must be signed by the applicant in accordance with 37 CFR 1.33. See 37 CFR 1.4 for signature requirements and certifications. If more than one applicant, use multiple forms.

☐ Total of forms are submitted.

This collection of information is required by 37 CFR 1.131, 1.32, and 1.33. The information is required to obtain or retain a benefit by the public which is to file (and by the USPTO to process) an application. Confidentiality is governed by 35 U.S.C. 122 and 37 CFR 1.11 and 1.14. This collection is estimated to take 3 minutes to complete, including gathering, preparing, and submitting the completed application form to the USPTO. Time will vary depending upon the individual case. Any comments on the amount of time you require to complete this form and/or suggestions for reducing this burden, should be sent to the Chief Information Officer, U.S. Patent and Trademark Office, U.S. Department of Commerce, P.O. Box 1450, Alexandria, VA 22313-1450. DO NOT SEND FEES OR COMPLETED FORMS TO THIS ADDRESS. **SEND TO: Commissioner for Patents, P.O. Box 1450, Alexandria, VA 22313-1450.**

If you need assistance in completing the form, call 1-800-PTO-9199 and select option 2.

[signature]
Jukka Nihtilä
Head, Business Development
Legal & IP

Electronic Patent Application Fee Transmittal

Application Number:	
Filing Date:	
Title of Invention:	MOTION PREDICTION IN VIDEO CODING
First Named Inventor/Applicant Name:	Kemal UGUR
Filer:	Guy Randall Gosnell/Jan Snider
Attorney Docket Number:	042933/496984

Filed as Large Entity

Filing Fees for Utility under 35 USC 111(a)

Description	Fee Code	Quantity	Amount	Sub-Total in USD($)
Basic Filing:				
UTILITY APPLICATION FILING	1011	1	280	280
UTILITY SEARCH FEE	1111	1	600	600
UTILITY EXAMINATION FEE	1311	1	720	720
Pages:				
Claims:				
CLAIMS IN EXCESS OF 20	1202	6	80	480
INDEPENDENT CLAIMS IN EXCESS OF 3	1201	2	420	840
Miscellaneous-Filing:				

Description	Fee Code	Quantity	Amount	Sub-Total in USD($)
Petition:				
Patent-Appeals-and-Interference:				
Post-Allowance-and-Post-Issuance:				
Extension-of-Time:				
Miscellaneous:				
			Total in USD ($)	**2920**

Electronic Acknowledgement Receipt	
EFS ID:	28958894
Application Number:	15490469
International Application Number:	
Confirmation Number:	5040
Title of Invention:	MOTION PREDICTION IN VIDEO CODING
First Named Inventor/Applicant Name:	Kemal UGUR
Customer Number:	10949
Filer:	Guy Randall Gosnell/Jan Snider
Filer Authorized By:	Guy Randall Gosnell
Attorney Docket Number:	042933/496984
Receipt Date:	18-APR-2017
Filing Date:	
Time Stamp:	16:30:36
Application Type:	Utility under 35 USC 111(a)

Payment information:

Submitted with Payment	yes
Payment Type	DA
Payment was successfully received in RAM	$2920
RAM confirmation Number	041917INTEFSW00003471160605
Deposit Account	
Authorized User	
The Director of the USPTO is hereby authorized to charge indicated fees and credit any overpayment as follows:	

File Listing:

Document Number	Document Description	File Name	File Size(Bytes)/ Message Digest	Multi Part /.zip	Pages (if appl.)
1	Application Data Sheet	496984_ADS.PDF	1823238 abbc35f973e8d3860fe458bbae4405d60e1c94bc	no	9
Warnings:					
Information:					
2		496984_Application.PDF	2415768 d77f9c89428f0360dda9003fc6067a3579eca7ac	yes	38
	Multipart Description/PDF files in .zip description				
	Document Description		**Start**	**End**	
	Specification		1	30	
	Claims		31	37	
	Abstract		38	38	
Warnings:					
Information:					
3	Drawings-only black and white line drawings	496984_Drawings.PDF	237788 296ae017487c7c97e65e49c1d2891cd95c6b170e	no	11
Warnings:					
Information:					
4	Oath or Declaration filed	496984_Declaration.PDF	218336 fac8ef534efaec36fe4e50b757ee79646372342a	no	3
Warnings:					
Information:					
5	Power of Attorney	496984_POA.pdf	554582 720c429fb1b07288c82bbfdcd86e4280e4a101ed	no	2

Warnings:					
Information:					
6	Fee Worksheet (SB06)	fee-info.pdf	38016 019ef5026b2ad5bd4138cfd03370fa693b70ec00	no	2
Warnings:					
Information:					
		Total Files Size (in bytes):	5287728		

This Acknowledgement Receipt evidences receipt on the noted date by the USPTO of the indicated documents, characterized by the applicant, and including page counts, where applicable. It serves as evidence of receipt similar to a Post Card, as described in MPEP 503.

New Applications Under 35 U.S.C. 111
If a new application is being filed and the application includes the necessary components for a filing date (see 37 CFR 1.53(b)-(d) and MPEP 506), a Filing Receipt (37 CFR 1.54) will be issued in due course and the date shown on this Acknowledgement Receipt will establish the filing date of the application.

National Stage of an International Application under 35 U.S.C. 371
If a timely submission to enter the national stage of an international application is compliant with the conditions of 35 U.S.C. 371 and other applicable requirements a Form PCT/DO/EO/903 indicating acceptance of the application as a national stage submission under 35 U.S.C. 371 will be issued in addition to the Filing Receipt, in due course.

New International Application Filed with the USPTO as a Receiving Office
If a new international application is being filed and the international application includes the necessary components for an international filing date (see PCT Article 11 and MPEP 1810), a Notification of the International Application Number and of the International Filing Date (Form PCT/RO/105) will be issued in due course, subject to prescriptions concerning national security, and the date shown on this Acknowledgement Receipt will establish the international filing date of the application.

PTO/AIA/14 (11-15)
Approved for use through 04/30/2017. OMB 0651-0032
U.S. Patent and Trademark Office; U.S. DEPARTMENT OF COMMERCE
Under the Paperwork Reduction Act of 1995, no persons are required to respond to a collection of information unless it contains a valid OMB control number.

Application Data Sheet 37 CFR 1.76	Attorney Docket Number	042933/496984
	Application Number	
Title of Invention	MOTION PREDICTION IN VIDEO CODING	

The application data sheet is part of the provisional or nonprovisional application for which it is being submitted. The following form contains the bibliographic data arranged in a format specified by the United States Patent and Trademark Office as outlined in 37 CFR 1.76.
This document may be completed electronically and submitted to the Office in electronic format using the Electronic Filing System (EFS) or the document may be printed and included in a paper filed application.

Secrecy Order 37 CFR 5.2:

☐ Portions or all of the application associated with this Application Data Sheet may fall under a Secrecy Order pursuant to 37 CFR 5.2 (Paper filers only. Applications that fall under Secrecy Order may not be filed electronically.)

Inventor Information:

Inventor 1 — Remove

Legal Name

Prefix	Given Name	Middle Name	Family Name	Suffix
	Kemal		UGUR	

Residence Information (Select One) US Residency ● Non US Residency Active US Military Service

City	Tampere	Country of Residence i	FI

Mailing Address of Inventor:

Address 1	Kuninkaankatu 5 J 221		
Address 2			
City	Tampere	State/Province	
Postal Code	33210	Country i	FI

Inventor 2 — Remove

Legal Name

Prefix	Given Name	Middle Name	Family Name	Suffix
	Jani		LAINEMA	

Residence Information (Select One) US Residency ◉ Non US Residency Active US Military Service

City	Tampere	Country of Residence i	FI

Mailing Address of Inventor:

Address 1	Kisakentankatu 12 B 6		
Address 2			
City	Tampere	State/Province	
Postal Code	33230	Country i	FI

Inventor 3 — Remove

Legal Name

PTO/AIA/14 (11-15)
Approved for use through 04/30/2017. OMB 0651-0032
U.S. Patent and Trademark Office; U.S. DEPARTMENT OF COMMERCE
Under the Paperwork Reduction Act of 1995, no persons are required to respond to a collection of information unless it contains a valid OMB control number.

Application Data Sheet 37 CFR 1.76	Attorney Docket Number	042933/496984
	Application Number	
Title of Invention	MOTION PREDICTION IN VIDEO CODING	

Prefix	Given Name	Middle Name	Family Name	Suffix
	Antti		HALLAPURO	

Residence Information (Select One) US Residency ◉ Non US Residency Active US Military Service

City	Tampere	Country of Residence i	FI

Mailing Address of Inventor:

Address 1	Opiskelijankatu 11 A 12		
Address 2			
City	Tampere	**State/Province**	
Postal Code	33720	**Country** i	FI

All Inventors Must Be Listed - Additional Inventor Information blocks may be generated within this form by selecting the **Add** button. Add

Correspondence Information:

Enter either Customer Number or complete the Correspondence Information section below. For further information see 37 CFR 1.33(a).

☐ **An Address is being provided for the correspondence Information of this application.**

Customer Number	10949		
Email Address		Add Email	Remove Email

Application Information:

Title of the Invention	MOTION PREDICTION IN VIDEO CODING		
Attorney Docket Number	042933/496984	**Small Entity Status Claimed**	☐
Application Type	Nonprovisional		
Subject Matter	Utility		
Total Number of Drawing Sheets (if any)	11	**Suggested Figure for Publication (if any)**	

Filing By Reference:

Only complete this section when filing an application by reference under 35 U.S.C. 111(c) and 37 CFR 1.57(a). Do not complete this section if application papers including a specification and any drawings are being filed. Any domestic benefit or foreign priority information must be provided in the appropriate section(s) below (i.e., "Domestic Benefit/National Stage Information" and "Foreign Priority Information").

For the purposes of a filing date under 37 CFR 1.53(b), the description and any drawings of the present application are replaced by this reference to the previously filed application, subject to conditions and requirements of 37 CFR 1.57(a).

Application number of the previously filed application	Filing date (YYYY-MM-DD)	Intellectual Property Authority or Country i

PTO/AIA/14 (11-15)
Approved for use through 04/30/2017. OMB 0651-0032
U.S. Patent and Trademark Office; U.S. DEPARTMENT OF COMMERCE
Under the Paperwork Reduction Act of 1995, no persons are required to respond to a collection of information unless it contains a valid OMB control number.

Application Data Sheet 37 CFR 1.76	Attorney Docket Number	042933/496984
	Application Number	
Title of Invention	MOTION PREDICTION IN VIDEO CODING	

Publication Information:

☐ Request Early Publication (Fee required at time of Request 37 CFR 1.219)

☐ **Request Not to Publish.** I hereby request that the attached application not be published under 35 U.S.C. 122(b) and certify that the invention disclosed in the attached application **has not and will not** be the subject of an application filed in another country, or under a multilateral international agreement, that requires publication at eighteen months after filing.

Representative Information:

Representative information should be provided for all practitioners having a power of attorney in the application. Providing this information in the Application Data Sheet does not constitute a power of attorney in the application (see 37 CFR 1.32).
Either enter Customer Number or complete the Representative Name section below. If both sections are completed the customer Number will be used for the Representative Information during processing.

Please Select One:	● Customer Number	US Patent Practitioner	○ Limited Recognition (37 CFR 11.9)
Customer Number	10949		

Domestic Benefit/National Stage Information:

This section allows for the applicant to either claim benefit under 35 U.S.C. 119(e), 120, 121, 365(c), or 386(c) or indicate National Stage entry from a PCT application. Providing benefit claim information in the Application Data Sheet constitutes the specific reference required by 35 U.S.C. 119(e) or 120, and 37 CFR 1.78.
When referring to the current application, please leave the "Application Number" field blank.

Prior Application Status	Pending		Remove
Application Number	**Continuity Type**	**Prior Application Number**	**Filing or 371(c) Date (YYYY-MM-DD)**
	Continuation of	15/250124	2016-08-29

Prior Application Status	Patented				Remove
Application Number	**Continuity Type**	**Prior Application Number**	**Filing Date (YYYY-MM-DD)**	**Patent Number**	**Issue Date (YYYY-MM-DD)**
15/250124	Continuation of	13/344893	2012-01-06	9432693	2016-08-30

Prior Application Status			Remove
Application Number	**Continuity Type**	**Prior Application Number**	**Filing or 371(c) Date (YYYY-MM-DD)**
13/344893	Claims benefit of provisional	61/430694	2011-01-07

Additional Domestic Benefit/National Stage Data may be generated within this form by selecting the **Add** button. Add

Application Data Sheet 37 CFR 1.76	Attorney Docket Number	042933/496984
	Application Number	
Title of Invention	MOTION PREDICTION IN VIDEO CODING	

Foreign Priority Information:

This section allows for the applicant to claim priority to a foreign application. Providing this information in the application data sheet constitutes the claim for priority as required by 35 U.S.C. 119(b) and 37 CFR 1.55. When priority is claimed to a foreign application that is eligible for retrieval under the priority document exchange program (PDX)[i] the information will be used by the Office to automatically attempt retrieval pursuant to 37 CFR 1.55(i)(1) and (2). Under the PDX program, applicant bears the ultimate responsibility for ensuring that a copy of the foreign application is received by the Office from the participating foreign intellectual property office, or a certified copy of the foreign priority application is filed, within the time period specified in 37 CFR 1.55(g)(1).

Remove

Application Number	Country[i]	Filing Date (YYYY-MM-DD)	Access Code[i] (if applicable)

Additional Foreign Priority Data may be generated within this form by selecting the **Add** button. Add

Statement under 37 CFR 1.55 or 1.78 for AIA (First Inventor to File) Transition Applications

☐ This application (1) claims priority to or the benefit of an application filed before March 16, 2013 and (2) also contains, or contained at any time, a claim to a claimed invention that has an effective filing date on or after March 16, 2013.
NOTE: By providing this statement under 37 CFR 1.55 or 1.78, this application, with a filing date on or after March 16, 2013, will be examined under the first inventor to file provisions of the AIA.

Application Data Sheet 37 CFR 1.76	Attorney Docket Number	042933/496984
	Application Number	
Title of Invention	MOTION PREDICTION IN VIDEO CODING	

Authorization or Opt-Out of Authorization to Permit Access:

When this Application Data Sheet is properly signed and filed with the application, applicant has provided written authority to permit a participating foreign intellectual property (IP) office access to the instant application-as-filed (see paragraph A in subsection 1 below) and the European Patent Office (EPO) access to any search results from the instant application (see paragraph B in subsection 1 below).

Should applicant choose not to provide an authorization identified in subsection 1 below, applicant **must opt-out** of the authorization by checking the corresponding box A or B or both in subsection 2 below.

NOTE: This section of the Application Data Sheet is **ONLY** reviewed and processed with the **INITIAL** filing of an application. After the initial filing of an application, an Application Data Sheet cannot be used to provide or rescind authorization for access by a foreign IP office(s). Instead, Form PTO/SB/39 or PTO/SB/69 must be used as appropriate.

1. Authorization to Permit Access by a Foreign Intellectual Property Office(s)

A. Priority Document Exchange (PDX) - Unless box A in subsection 2 (opt-out of authorization) is checked, the undersigned hereby **grants the USPTO authority** to provide the European Patent Office (EPO), the Japan Patent Office (JPO), the Korean Intellectual Property Office (KIPO), the State Intellectual Property Office of the People's Republic of China (SIPO), the World Intellectual Property Organization (WIPO), and any other foreign intellectual property office participating with the USPTO in a bilateral or multilateral priority document exchange agreement in which a foreign application claiming priority to the instant patent application is filed, access to: (1) the instant patent application-as-filed and its related bibliographic data, (2) any foreign or domestic application to which priority or benefit is claimed by the instant application and its related bibliographic data, and (3) the date of filing of this Authorization. See 37 CFR 1.14(h)(1).

B. Search Results from U.S. Application to EPO - Unless box B in subsection 2 (opt-out of authorization) is checked, the undersigned hereby **grants the USPTO authority** to provide the EPO access to the bibliographic data and search results from the instant patent application when a European patent application claiming priority to the instant patent application is filed. See 37 CFR 1.14(h)(2).

The applicant is reminded that the EPO's Rule 141(1) EPC (European Patent Convention) requires applicants to submit a copy of search results from the instant application without delay in a European patent application that claims priority to the instant application.

2. Opt-Out of Authorizations to Permit Access by a Foreign Intellectual Property Office(s)

☐ A. Applicant **DOES NOT** authorize the USPTO to permit a participating foreign IP office access to the instant application-as-filed. If this box is checked, the USPTO will not be providing a participating foreign IP office with any documents and information identified in subsection 1A above.

☐ B. Applicant **DOES NOT** authorize the USPTO to transmit to the EPO any search results from the instant patent application. If this box is checked, the USPTO will not be providing the EPO with search results from the instant application.

NOTE: Once the application has published or is otherwise publicly available, the USPTO may provide access to the application in accordance with 37 CFR 1.14.

PTO/AIA/14 (11-15)
Approved for use through 04/30/2017. OMB 0651-0032
U.S. Patent and Trademark Office; U.S. DEPARTMENT OF COMMERCE
Under the Paperwork Reduction Act of 1995, no persons are required to respond to a collection of information unless it contains a valid OMB control number.

Application Data Sheet 37 CFR 1.76	Attorney Docket Number	042933/496984
	Application Number	
Title of Invention	MOTION PREDICTION IN VIDEO CODING	

Applicant Information:

Providing assignment information in this section does not substitute for compliance with any requirement of part 3 of Title 37 of CFR to have an assignment recorded by the Office.

Applicant 1 Remove

If the applicant is the inventor (or the remaining joint inventor or inventors under 37 CFR 1.45), this section should not be completed. The information to be provided in this section is the name and address of the legal representative who is the applicant under 37 CFR 1.43; or the name and address of the assignee, person to whom the inventor is under an obligation to assign the invention, or person who otherwise shows sufficient proprietary interest in the matter who is the applicant under 37 CFR 1.46. If the applicant is an applicant under 37 CFR 1.46 (assignee, person to whom the inventor is obligated to assign, or person who otherwise shows sufficient proprietary interest) together with one or more joint inventors, then the joint inventor or inventors who are also the applicant should be identified in this section. Clear

● Assignee	Legal Representative under 35 U.S.C. 117	Joint Inventor
Person to whom the inventor is obligated to assign.	Person who shows sufficient proprietary interest	

If applicant is the legal representative, indicate the authority to file the patent application, the inventor is:

Name of the Deceased or Legally Incapacitated Inventor:

If the Applicant is an Organization check here. ☒

Organization Name	Nokia Technologies Oy		
Mailing Address Information For Applicant:			
Address 1	Karaportti 3		
Address 2			
City	Espoo	**State/Province**	
Country	FI	Postal Code	02610
Phone Number		Fax Number	
Email Address			

Additional Applicant Data may be generated within this form by selecting the Add button. Add

Assignee Information including Non-Applicant Assignee Information:

Providing assignment information in this section does not substitute for compliance with any requirement of part 3 of Title 37 of CFR to have an assignment recorded by the Office.

PTO/AIA/14 (11-15)
Approved for use through 04/30/2017. OMB 0651-0032
U.S. Patent and Trademark Office; U.S. DEPARTMENT OF COMMERCE
Under the Paperwork Reduction Act of 1995, no persons are required to respond to a collection of information unless it contains a valid OMB control number.

Application Data Sheet 37 CFR 1.76	Attorney Docket Number	042933/496984
	Application Number	
Title of Invention	MOTION PREDICTION IN VIDEO CODING	

Assignee 1

Complete this section if assignee information, including non-applicant assignee information, is desired to be included on the patent application publication. An assignee-applicant identified in the "Applicant Information" section will appear on the patent application publication as an applicant. For an assignee-applicant, complete this section only if identification as an assignee is also desired on the patent application publication.

Remove

If the Assignee or Non-Applicant Assignee is an Organization check here. ☐

Prefix	**Given Name**	Middle Name	**Family Name**	Suffix

Mailing Address Information For Assignee including Non-Applicant Assignee:

Address 1			
Address 2			
City		**State/Province**	
Country i		Postal Code	
Phone Number		Fax Number	
Email Address			

Additional Assignee or Non-Applicant Assignee Data may be generated within this form by selecting the Add button. Add

Signature:

Remove

NOTE: This Application Data Sheet must be signed in accordance with 37 CFR 1.33(b). **However, if this Application Data Sheet is submitted with the INITIAL filing of the application and either box A or B is not checked in subsection 2 of the "Authorization or Opt-Out of Authorization to Permit Access" section, then this form must also be signed in accordance with 37 CFR 1.14(c).**

This Application Data Sheet **must** be signed by a patent practitioner if one or more of the applicants is a **juristic entity** (e.g., corporation or association). If the applicant is two or more joint inventors, this form must be signed by a patent practitioner, **all** joint inventors who are the applicant, or one or more joint inventor-applicants who have been given power of attorney (e.g., see USPTO Form PTO/AIA/81) on behalf of **all** joint inventor-applicants.

See 37 CFR 1.4(d) for the manner of making signatures and certifications.

Signature	/Guy R. Gosnell/			Date (YYYY-MM-DD)	2017-04-18
First Name	Guy	Last Name	Gosnell	Registration Number	34610

Additional Signature may be generated within this form by selecting the Add button. Add

PTO/AIA/14 (11-15)
Approved for use through 04/30/2017. OMB 0651-0032
U.S. Patent and Trademark Office; U.S. DEPARTMENT OF COMMERCE
Under the Paperwork Reduction Act of 1995, no persons are required to respond to a collection of information unless it contains a valid OMB control number.

Application Data Sheet 37 CFR 1.76	Attorney Docket Number	042933/496984
	Application Number	
Title of Invention	MOTION PREDICTION IN VIDEO CODING	

This collection of information is required by 37 CFR 1.76. The information is required to obtain or retain a benefit by the public which is to file (and by the USPTO to process) an application. Confidentiality is governed by 35 U.S.C. 122 and 37 CFR 1.14. This collection is estimated to take 23 minutes to complete, including gathering, preparing, and submitting the completed application data sheet form to the USPTO. Time will vary depending upon the individual case. Any comments on the amount of time you require to complete this form and/or suggestions for reducing this burden, should be sent to the Chief Information Officer, U.S. Patent and Trademark Office, U.S. Department of Commerce, P.O. Box 1450, Alexandria, VA 22313-1450. DO NOT SEND FEES OR COMPLETED FORMS TO THIS ADDRESS. **SEND TO: Commissioner for Patents, P.O. Box 1450, Alexandria, VA 22313-1450.**

Privacy Act Statement

The Privacy Act of 1974 (P.L. 93-579) requires that you be given certain information in connection with your submission of the attached form related to a patent application or patent. Accordingly, pursuant to the requirements of the Act, please be advised that: (1) the general authority for the collection of this information is 35 U.S.C. 2(b)(2); (2) furnishing of the information solicited is voluntary; and (3) the principal purpose for which the information is used by the U.S. Patent and Trademark Office is to process and/or examine your submission related to a patent application or patent. If you do not furnish the requested information, the U.S. Patent and Trademark Office may not be able to process and/or examine your submission, which may result in termination of proceedings or abandonment of the application or expiration of the patent.

The information provided by you in this form will be subject to the following routine uses:

1 The information on this form will be treated confidentially to the extent allowed under the Freedom of Information Act (5 U.S.C. 552) and the Privacy Act (5 U.S.C. 552a). Records from this system of records may be disclosed to the Department of Justice to determine whether the Freedom of Information Act requires disclosure of these records.

2. A record from this system of records may be disclosed, as a routine use, in the course of presenting evidence to a court, magistrate, or administrative tribunal, including disclosures to opposing counsel in the course of settlement negotiations.

3 A record in this system of records may be disclosed, as a routine use, to a Member of Congress submitting a request involving an individual, to whom the record pertains, when the individual has requested assistance from the Member with respect to the subject matter of the record.

4. A record in this system of records may be disclosed, as a routine use, to a contractor of the Agency having need for the information in order to perform a contract. Recipients of information shall be required to comply with the requirements of the Privacy Act of 1974, as amended, pursuant to 5 U.S.C. 552a(m).

5. A record related to an International Application filed under the Patent Cooperation Treaty in this system of records may be disclosed, as a routine use, to the International Bureau of the World Intellectual Property Organization, pursuant to the Patent CooperationTreaty.

6. A record in this system of records may be disclosed, as a routine use, to another federal agency for purposes of National Security review (35 U.S.C. 181) and for review pursuant to the Atomic Energy Act (42 U.S.C. 218(c)).

7. A record from this system of records may be disclosed, as a routine use, to the Administrator, General Services, or his/her designee, during an inspection of records conducted by GSA as part of that agency's responsibility to recommend improvements in records management practices and programs, under authority of 44 U.S.C. 2904 and 2906. Such disclosure shall be made in accordance with the GSA regulations governing inspection of records for this purpose, and any other relevant (i.e., GSA or Commerce) directive. Such disclosure shall not be used to make determinations about individuals.

8. A record from this system of records may be disclosed, as a routine use, to the public after either publication of the application pursuant to 35 U.S.C. 122(b) or issuance of a patent pursuant to 35 U.S.C. 151. Further, a record may be disclosed, subject to the limitations of 37 CFR 1.14, as a routine use, to the public if the record was filed in an application which became abandoned or in which the proceedings were terminated and which application is referenced by either a published application, an application open to public inspections or an issued patent.

9. A record from this system of records may be disclosed, as a routine use, to a Federal, State, or local law enforcement agency, if the USPTO becomes aware of a violation or potential violation of law or regulation.

Nokia Exhibit 2013, p.69
ASUS v. Nokia
IPR2025-01154

MOTION PREDICTION IN VIDEO CODING

CROSS REFERENCE TO RELATED APPLICATION

[0001] This application is a continuation of U.S. Application No. 15/250,124, filed August 29, 2016, which is a continuation of U.S. Application No. 13/344,893, filed on January 6, 2012, which claims priority to U.S. Provisional Application No. 61/430,694, filed January 7, 2011, the entire contents of which are incorporated herein by reference.

TECHNICAL FIELD

[0002] The present invention relates to an apparatus, a method and a computer program for producing and utilizing motion prediction information in video encoding and decoding.

BACKGROUND INFORMATION

[0003] A video codec may comprise an encoder which transforms input video into a compressed representation suitable for storage and/or transmission and a decoder that can uncompress the compressed video representation back into a viewable form, or either one of them. The encoder may discard some information in the original video sequence in order to represent the video in a more compact form, for example at a lower bit rate.

[0004] Many hybrid video codecs, operating for example according to the International Telecommunication Union's ITU-T H.263 and H.264 coding standards, encode video information in two phases. In the first phase, pixel values in a certain picture area or "block" are predicted. These pixel values can be predicted, for example, by motion compensation mechanisms, which involve finding and indicating an area in one of the previously encoded video frames (or a later coded video frame) that corresponds closely to the block being coded. Additionally, pixel values can be predicted by spatial mechanisms which involve finding and indicating a spatial region relationship, for example by using pixel values around the block to be coded in a specified manner.

[0005] Prediction approaches using image information from a previous (or a later) image can also be called as Inter prediction methods, and prediction approaches using image information within the same image can also be called as Intra prediction methods.

Nokia Exhibit 2013, p.70
ASUS v. Nokia
IPR2025-01154

[0006] The second phase is one of coding the error between the predicted block of pixels and the original block of pixels. This is typically accomplished by transforming the difference in pixel values using a specified transform. This transform may be e.g. a Discrete Cosine Transform (DCT) or a variant thereof. After transforming the difference, the transformed difference may be quantized and entropy encoded.

[0007] By varying the fidelity of the quantization process, the encoder can control the balance between the accuracy of the pixel representation, (in other words, the quality of the picture) and the size of the resulting encoded video representation (in other words, the file size or transmission bit rate).

[0008] An example of the encoding process is illustrated in Figure 1.

[0009] The decoder reconstructs the output video by applying a prediction mechanism similar to that used by the encoder in order to form a predicted representation of the pixel blocks (using the motion or spatial information created by the encoder and stored in the compressed representation of the image) and prediction error decoding (the inverse operation of the prediction error coding to recover the quantized prediction error signal in the spatial domain).

[0010] After applying pixel prediction and error decoding processes the decoder combines the prediction and the prediction error signals (the pixel values) to form the output video frame.

[0011] The decoder (and encoder) may also apply additional filtering processes in order to improve the quality of the output video before passing it for display and/or storing as a prediction reference for the forthcoming frames in the video sequence.

[0012] An example of the decoding process is illustrated in Figure 2.

[0013] Motion Compensated Prediction (MCP) is a technique used by video compression standards to reduce the size of an encoded bitstream. In MCP, a prediction for a current frame is formed using a previously coded frame(s), where only the difference between original and prediction signals, representative of the current and predicted frames, is encoded and sent to a decoder. A prediction signal, representative of a prediction frame, is formed by first dividing a current frame into blocks, e.g., macroblocks, and searching for a best match in a reference frame for each block. In this way, the motion of a block relative to the reference frame is determined and this motion information is coded into a bitstream as motion vectors. A decoder

Nokia Exhibit 2013, p.71
ASUS v. Nokia
IPR2025-01154

is able to reconstruct the exact prediction frame by decoding the motion vector data encoded in the bitstream.

[0014] An example of a prediction structure is presented in Figure 8. Boxes indicate pictures, capital letters within boxes indicate coding types, numbers within boxes are picture numbers (in decoding order), and arrows indicate prediction dependencies. In this example I-pictures are intra pictures which do not use any reference pictures and thus can be decoded irrespective of the decoding of other pictures. P-pictures are so called uni-predicted pictures i.e. they refer to one reference picture, and B-pictures are bi-predicted pictures which use two other pictures as reference pictures, or two prediction blocks within one reference picture. In other words, the reference blocks relating to the B-picture may be in the same reference picture (as illustrated with the two arrows from picture P7 to picture B8 in Figure 8) or in two different reference pictures (as illustrated e.g. with the arrows from picture P2 and from picture B3 to picture B4 in Figure 8).

[0015] It should also be noted here that one picture may include different types of blocks i.e. blocks of a picture may be intra-blocks, uni-predicted blocks, and/or bi-predicted blocks. Motion vectors often relate to blocks wherein for one picture a plurality of motion vectors may exist.

[0016] In some systems the uni-predicted pictures are also called as uni-directionally predicted pictures and the bi-predicted pictures are called as bi-directionally predicted pictures.

[0017] The motion vectors are not limited to having full-pixel accuracy, but could have fractional-pixel accuracy as well. That is, motion vectors can point to fractional-pixel positions/locations of the reference frame, where the fractional-pixel locations can refer to, for example, locations "in between" image pixels. In order to obtain samples at fractional-pixel locations, interpolation filters may be used in the MCP process. Conventional video coding standards describe how a decoder can obtain samples at fractional-pixel accuracy by defining an interpolation filter. In MPEG-2, for example, motion vectors can have at most, half-pixel accuracy, where the samples at half-pixel locations are obtained by a simple averaging of neighboring samples at full-pixel locations. The H.264/AVC video coding standard supports motion vectors with up to quarter-pixel accuracy. Furthermore, in the H.264/AVC video coding standard, half-pixel samples are obtained through the use of symmetric and separable 6-tap

Nokia Exhibit 2013, p.72
ASUS v. Nokia
IPR2025-01154

filters, while quarter-pixel samples are obtained by averaging the nearest half or full-pixel samples.

[0018] In typical video codecs, the motion information is indicated by motion vectors associated with each motion compensated image block. Each of these motion vectors represents the displacement of the image block in the picture to be coded (in the encoder) or decoded (at the decoder) and the prediction source block in one of the previously coded or decoded images (or pictures). In order to represent motion vectors efficiently, motion vectors are typically coded differentially with respect to block specific predicted motion vector. In a typical video codec, the predicted motion vectors are created in a predefined way, for example by calculating the median of the encoded or decoded motion vectors of the adjacent blocks.

[0019] In typical video codecs the prediction residual after motion compensation is first transformed with a transform kernel (like DCT) and then coded. The reason for this is that often there still exists some correlation among the residual and transform can in many cases help reduce this correlation and provide more efficient coding.

[0020] Typical video encoders utilize the Lagrangian cost function to find optimal coding modes, for example the desired macro block mode and associated motion vectors. This type of cost function uses a weighting factor or λ to tie together the exact or estimated image distortion due to lossy coding methods and the exact or estimated amount of information required to represent the pixel values in an image area.

[0021] This may be represented by the equation:

$$C=D+\square\lambda R \qquad (1)$$

[0022] where C is the Lagrangian cost to be minimised, D is the image distortion (for example, the mean-squared error between the pixel values in original image block and in coded image block) with the mode and motion vectors currently considered, λ is a Lagrangian coefficient and R is the number of bits needed to represent the required data to reconstruct the image block in the decoder (including the amount of data to represent the candidate motion vectors).

[0023] Some hybrid video codecs, such as H.264/AVC, utilize bi-directional motion compensated prediction to improve the coding efficiency. In bi-directional prediction, prediction signal of the block may be formed by combining, for example by averaging two motion

Nokia Exhibit 2013, p.73
ASUS v. Nokia
IPR2025-01154

compensated prediction blocks. This averaging operation may further include either up or down rounding, which may introduce rounding errors.

[0024] The accumulation of rounding errors in bi-directional prediction may cause degradation in coding efficiency. This rounding error accumulation may be removed or decreased by signalling whether rounding up or rounding down have been used when the two prediction signals have been combined for each frame. Alternatively the rounding error could be controlled by alternating the usage of the rounding up and rounding down for each frame. For example, rounding up may be used for every other frame and, correspondingly, rounding down may be used for every other frame.

[0025] In figure 9 an example of averaging two motion compensated prediction blocks using rounding is illustrated. Sample values of the first prediction reference is input 902 to a first filter 904 in which values of two or more full pixels near the point which the motion vector is referring to are used in the filtering. A rounding offset may be added 906 to the filtered value. The filtered value added with the rounding offset is right shifted 908 x-bits i.e. divided by 2^x to obtain a first prediction signal P1. Similar operation is performed to the second prediction reference as is illustrated with blocks 912, 914, 916 and 918 to obtain a second prediction signal P2. The first prediction signal P1 and the second prediction signal P2 are combined e.g. by summing the prediction signals P1, P2. A rounding offset may be added 920 with the combined signal after which the result is right shifted y-bits i.e. divided by 2^y. The rounding may be upwards, if the rounding offset is positive, or downwards, if the rounding offset is negative. The direction of the rounding may always be the same, or it may alter from time to time, e.g. for each frame. The direction of the rounding may be signaled in the bitstream so that in the decoding process the same rounding direction can be used.

[0026] However, these methods increase somewhat the complexity as two separate code branches need to be written for bi-directional averaging. In addition, the motion estimation routines in the encoder may need to be doubled for both cases of rounding and truncation.

SUMMARY

[0027] The present invention introduces a method which enables reducing the effect of rounding errors in bi-directional and multi-directional prediction. According to some embodiments of the invention prediction signals are maintained in a higher precision during the

Nokia Exhibit 2013, p.74
ASUS v. Nokia
IPR2025-01154

prediction calculation and the precision is reduced after the two or more prediction signals have been combined with each other.

[0028] In some example embodiments prediction signals are maintained in higher accuracy until the prediction signals have been combined to obtain the bi-directional or multidirectional prediction signal. The accuracy of the bi-directional or multidirectional prediction signal can then be downshifted to an appropriate accuracy for post processing purposes. Then, no rounding direction indicator need not be included in or read from the bitstream

[0029] According to a first aspect of the present invention there is provided a method comprising:

determining a block of pixels of a video representation encoded in a bitstream, values of said pixels having a first precision;

determining a type of the block;

if the determining indicates that the block is a block predicted by using two or more reference blocks,

determining a first reference pixel location in a first reference block and a second reference pixel location in a second reference block;

using said first reference pixel location to obtain a first prediction, said first prediction having a second precision, which is higher than said first precision;

using said second reference pixel location to obtain a second prediction, said second prediction having the second precision, which is higher than said first precision;

combining said first prediction and said second prediction to obtain a combined prediction; and

decreasing the precision of said combined prediction to said first precision.

[0030] According to a second aspect of the present invention there is provided an apparatus comprising:

a processor; and

a memory unit operatively connected to the processor and including:

computer code configured to determine a block of pixels of a video representation encoded in a bitstream, values of said pixels having a first precision;

computer code configured to determine a type of the block;

Nokia Exhibit 2013, p.75
ASUS v. Nokia
IPR2025-01154

computer code configured to, if the determining indicates that the block is a block predicted by using two or more reference blocks,

determine a first reference pixel location in a first reference block and a second reference pixel location in a second reference block;

use said first reference pixel location to obtain a first prediction, said first prediction having a second precision, which is higher than said first precision;

use said second reference pixel location to obtain a second prediction, said second prediction having the second precision, which is higher than said first precision;

combine said first prediction and said second prediction to obtain a combined prediction; and

decrease the precision of said combined prediction to said first precision.

[0031] According to a third aspect of the present invention there is provided a computer readable storage medium stored with code thereon for use by an apparatus, which when executed by a processor, causes the apparatus to perform:

determine a block of pixels of a video representation encoded in a bitstream, values of said pixels having a first precision;

determine a type of the block;

if the determining indicates that the block is a block predicted by using two or more reference blocks,

determine a first reference pixel location in a first reference block and a second reference pixel location in a second reference block;

use said first reference pixel location to obtain a first prediction, said first prediction having a second precision, which is higher than said first precision;

use said second reference pixel location to obtain a second prediction, said second prediction having the second precision, which is higher than said first precision;

combine said first prediction and said second prediction to obtain a combined prediction; and

decrease the precision of said combined prediction to said first precision.

[0032] According to a fourth aspect of the present invention there is provided at least one processor and at least one memory, said at least one memory stored with code thereon, which when executed by said at least one processor, causes an apparatus to perform:

Nokia Exhibit 2013, p.76
ASUS v. Nokia
IPR2025-01154

determine a block of pixels of a video representation encoded in a bitstream, values of said pixels having a first precision;

determine a type of the block;

if the determining indicates that the block is a block predicted by using two or more reference blocks,

determine a first reference pixel location in a first reference block and a second reference pixel location in a second reference block;

use said first reference pixel location to obtain a first prediction, said first prediction having a second precision, which is higher than said first precision;

use said second reference pixel location to obtain a second prediction, said second prediction having the second precision, which is higher than said first precision;

combine said first prediction and said second prediction to obtain a combined prediction; and

decrease the precision of said combined prediction to said first precision.

[0033] According to a fifth aspect of the present invention there is provided an apparatus comprising:

an input to determine a block of pixels of a video representation encoded in a bitstream, values of said pixels having a first precision;

a determinator to determine a type of the block; wherein if the determining indicates that the block is a block predicted by using two or more reference blocks, said determinator further to determine a first reference pixel location in a first reference block and a second reference pixel location in a second reference block;

a first predictor to use said first reference pixel location to obtain a first prediction, said first prediction having a second precision, which is higher than said first precision;

a second predictor to use said second reference pixel location to obtain a second prediction, said second prediction having the second precision, which is higher than said first precision;

a combiner to combine said first prediction and said second prediction to obtain a combined prediction; and

a shifter to decrease the precision of said combined prediction to said first precision.

Nokia Exhibit 2013, p.77
ASUS v. Nokia
IPR2025-01154

[0034] According to a sixth aspect of the present invention there is provided an apparatus comprising:

means for determining a block of pixels of a video representation encoded in a bitstream, values of said pixels having a first precision;

means for determining a type of the block;

means for determining a first reference pixel location in a first reference block and a second reference pixel location in a second reference block, if the determining indicates that the block is a block predicted by using two or more reference blocks;

means for using said first reference pixel location to obtain a first prediction, said first prediction having a second precision, which is higher than said first precision;

means for using said second reference pixel location to obtain a second prediction, said second prediction having the second precision, which is higher than said first precision;

means for combining said first prediction and said second prediction to obtain a combined prediction; and

means for decreasing the precision of said combined prediction to said first precision.

[0035] This invention removes the need to signal the rounding offset or use different methods for rounding for different frames. This invention may keep the motion compensated prediction signal of each one of the predictions at highest precision possible after interpolation and perform the rounding to the bit-depth range of the video signal after both prediction signals are added.

DESCRIPTION OF THE DRAWINGS

[0036] For better understanding of the present invention, reference will now be made by way of example to the accompanying drawings in which:

[0037] Figure 1 shows schematically an electronic device employing some embodiments of the invention;

[0038] Figure 2 shows schematically a user equipment suitable for employing some embodiments of the invention;

[0039] Figure 3 further shows schematically electronic devices employing embodiments of the invention connected using wireless and wired network connections;

Nokia Exhibit 2013, p.78
ASUS v. Nokia
IPR2025-01154

[0040] Figure 4a shows schematically an embodiment of the invention as incorporated within an encoder;

[0041] Figure 4b shows schematically an embodiment of an inter predictor according to some embodiments of the invention;

[0042] Figure 5 shows a flow diagram showing the operation of an embodiment of the invention with respect to the encoder as shown in figure 4a;

[0043] Figure 6 shows a schematic diagram of a decoder according to some embodiments of the invention;

[0044] Figure 7 shows a flow diagram of showing the operation of an embodiment of the invention with respect to the decoder shown in figure 6;

[0045] Figure 8 illustrates an example of a prediction structure in a video sequence;

[0046] Figure 9 depicts an example of a bit stream of an image;

[0047] Figure 10 depicts an example of bi-directional prediction using rounding;

[0048] Figure 11 depicts an example of bi-directional prediction according to an example embodiment of the present invention; and

[0049] Figure 12 illustrates an example of some possible prediction directions for a motion vector.

DETAILED DESCRIPTION OF SOME EXAMPLE EMBODIMENTS

[0050] The following describes in further detail suitable apparatus and possible mechanisms for the provision of reducing information to be transmitted in video coding systems and more optimal codeword mappings in some embodiments. In this regard reference is first made to Figure 1 which shows a schematic block diagram of an exemplary apparatus or electronic device 50, which may incorporate a codec according to an embodiment of the invention.

[0051] The electronic device 50 may for example be a mobile terminal or user equipment of a wireless communication system. However, it would be appreciated that embodiments of the invention may be implemented within any electronic device or apparatus which may require encoding and decoding or encoding or decoding video images.

[0052] The apparatus 50 may comprise a housing 30 for incorporating and protecting the device. The apparatus 50 further may comprise a display 32 in the form of a liquid crystal

Nokia Exhibit 2013, p.79
ASUS v. Nokia
IPR2025-01154

display. In other embodiments of the invention the display may be any suitable display technology suitable to display an image or video. The apparatus 50 may further comprise a keypad 34. In other embodiments of the invention any suitable data or user interface mechanism may be employed. For example the user interface may be implemented as a virtual keyboard or data entry system as part of a touch-sensitive display. The apparatus may comprise a microphone 36 or any suitable audio input which may be a digital or analogue signal input. The apparatus 50 may further comprise an audio output device which in embodiments of the invention may be any one of: an earpiece 38, speaker, or an analogue audio or digital audio output connection. The apparatus 50 may also comprise a battery 40 (or in other embodiments of the invention the device may be powered by any suitable mobile energy device such as solar cell, fuel cell or clockwork generator). The apparatus may further comprise an infrared port 42 for short range line of sight communication to other devices. In other embodiments the apparatus 50 may further comprise any suitable short range communication solution such as for example a Bluetooth wireless connection or a USB/firewire wired connection.

[0053] The apparatus 50 may comprise a controller 56 or processor for controlling the apparatus 50. The controller 56 may be connected to memory 58 which in embodiments of the invention may store both data in the form of image and audio data and/or may also store instructions for implementation on the controller 56. The controller 56 may further be connected to codec circuitry 54 suitable for carrying out coding and decoding of audio and/or video data or assisting in coding and decoding carried out by the controller 56.

[0054] The apparatus 50 may further comprise a card reader 48 and a smart card 46, for example a UICC and UICC reader for providing user information and being suitable for providing authentication information for authentication and authorization of the user at a network.

[0055] The apparatus 50 may comprise radio interface circuitry 52 connected to the controller and suitable for generating wireless communication signals for example for communication with a cellular communications network, a wireless communications system or a wireless local area network. The apparatus 50 may further comprise an antenna 44 connected to the radio interface circuitry 52 for transmitting radio frequency signals generated at the radio interface circuitry 52 to other apparatus(es) and for receiving radio frequency signals from other apparatus(es).

Nokia Exhibit 2013, p.80
ASUS v. Nokia
IPR2025-01154

[0056] In some embodiments of the invention, the apparatus 50 comprises a camera capable of recording or detecting individual frames which are then passed to the codec 54 or controller for processing. In some embodiments of the invention, the apparatus may receive the video image data for processing from another device prior to transmission and/or storage. In some embodiments of the invention, the apparatus 50 may receive either wirelessly or by a wired connection the image for coding/decoding.

[0057] With respect to Figure 3, an example of a system within which embodiments of the present invention can be utilized is shown. The system 10 comprises multiple communication devices which can communicate through one or more networks. The system 10 may comprise any combination of wired or wireless networks including, but not limited to a wireless cellular telephone network (such as a GSM, UMTS, CDMA network etc), a wireless local area network (WLAN) such as defined by any of the IEEE 802.x standards, a Bluetooth personal area network, an Ethernet local area network, a token ring local area network, a wide area network, and the Internet.

[0058] The system 10 may include both wired and wireless communication devices or apparatus 50 suitable for implementing embodiments of the invention.

[0059] For example, the system shown in Figure 3 shows a mobile telephone network 11 and a representation of the internet 28. Connectivity to the internet 28 may include, but is not limited to, long range wireless connections, short range wireless connections, and various wired connections including, but not limited to, telephone lines, cable lines, power lines, and similar communication pathways.

[0060] The example communication devices shown in the system 10 may include, but are not limited to, an electronic device or apparatus 50, a combination of a personal digital assistant (PDA) and a mobile telephone 14, a PDA 16, an integrated messaging device (IMD) 18, a desktop computer 20, a notebook computer 22. The apparatus 50 may be stationary or mobile when carried by an individual who is moving. The apparatus 50 may also be located in a mode of transport including, but not limited to, a car, a truck, a taxi, a bus, a train, a boat, an airplane, a bicycle, a motorcycle or any similar suitable mode of transport.

[0061] Some or further apparatus may send and receive calls and messages and communicate with service providers through a wireless connection 25 to a base station 24. The base station 24 may be connected to a network server 26 that allows communication between the

Nokia Exhibit 2013, p.81
ASUS v. Nokia
IPR2025-01154

mobile telephone network 11 and the internet 28. The system may include additional communication devices and communication devices of various types.

[0062] The communication devices may communicate using various transmission technologies including, but not limited to, code division multiple access (CDMA), global systems for mobile communications (GSM), universal mobile telecommunications system (UMTS), time divisional multiple access (TDMA), frequency division multiple access (FDMA), transmission control protocol-internet protocol (TCP-IP), short messaging service (SMS), multimedia messaging service (MMS), email, instant messaging service (IMS), Bluetooth, IEEE 802.11 and any similar wireless communication technology. A communications device involved in implementing various embodiments of the present invention may communicate using various media including, but not limited to, radio, infrared, laser, cable connections, and any suitable connection.

[0063] Various embodiments can extend conventional two-stage sub-pixel interpolation algorithms, such as the algorithm used in the H.264/AVC video coding standard, without the need to increase the complexity of the decoder. It should be noted here that Figure 11 illustrates only some full pixel values which are the nearest neighbors to the example block of pixels but in the interpolation it may also be possible to use full pixel values located farther from the block under consideration. Furthermore, the present invention is not only limited to implementations using one-dimensional interpolation but the fractional pixel samples can also be obtained using more complex interpolation or filtering.

[0064] It should be noted that various embodiments can be implemented by and/or in conjunction with other video coding standards besides the H.264/AVC video coding standard.

[0065] With respect to Figure 4a, a block diagram of a video encoder suitable for carrying out embodiments of the invention is shown. Furthermore, with respect to Figure 5, the operation of the encoder exemplifying embodiments of the invention specifically with respect to the utilization of higher accuracy calculation of prediction signals is shown as a flow diagram.

[0066] Figure 4a shows the encoder as comprising a pixel predictor 302, prediction error encoder 303 and prediction error decoder 304. Figure 4a also shows an embodiment of the pixel predictor 302 as comprising an inter-predictor 306, an intra-predictor 308, a mode selector 310, a filter 316, and a reference frame memory 318. The mode selector 310 comprises a block processor 381 and a cost evaluator 382. Figure 4b also depicts an embodiment of the inter-

Nokia Exhibit 2013, p.82
ASUS v. Nokia
IPR2025-01154

predictor 306 which comprises a block selector 360 and a motion vector definer 361, which may be implemented e.g. in a prediction processor 362. The inter-predictor 306 may also have access to a parameter memory 404. The mode selector 310 may also comprise a quantizer 384.

[0067] The pixel predictor 302 receives the image 300 to be encoded at both the inter-predictor 306 (which determines the difference between the image and a motion compensated reference frame 318) and the intra-predictor 308 (which determines a prediction for an image block based only on the already processed parts of current frame or picture). The output of both the inter-predictor and the intra-predictor are passed to the mode selector 310. The intra-predictor 308 may have more than one intra-prediction modes. Hence, each mode may perform the intra-prediction and provide the predicted signal to the mode selector 310. The mode selector 310 also receives a copy of the image 300.

[0068] The block processor 381 determines which encoding mode to use to encode the current block. If the block processor 381 decides to use an inter-prediction mode it will pass the output of the inter-predictor 306 to the output of the mode selector 310. If the block processor 381 decides to use an intra-prediction mode it will pass the output of one of the intra-predictor modes to the output of the mode selector 310.

[0069] According to some example embodiments the pixel predictor 302 operates as follows. The inter predictor 306 and the intra prediction modes 308 perform the prediction of the current block to obtain predicted pixel values of the current block. The inter predictor 306 and the intra prediction modes 308 may provide the predicted pixel values of the current block to the block processor 381 for analyzing which prediction to select. In addition to the predicted values of the current block, the block processor 381 may, in some embodiments, receive an indication of a directional intra prediction mode from the intra prediction modes.

[0070] The block processor 381 examines whether to select the inter prediction mode or the intra prediction mode. The block processor 381 may use cost functions such as the equation (1) or some other methods to analyze which encoding method gives the most efficient result with respect to a certain criterion or criteria. The selected criteria may include coding efficiency, processing costs and/or some other criteria. The block processor 381 may examine the prediction for each directionality i.e. for each intra prediction mode and inter prediction mode and calculate the cost value for each intra prediction mode and inter prediction mode, or the

Nokia Exhibit 2013, p.83
ASUS v. Nokia
IPR2025-01154

block processor 381 may examine only a subset of all available prediction modes in the selection of the prediction mode.

[0071] In some embodiments the inter predictor 306 operates as follows. The block selector 360 receives a current block to be encoded (block 504 in Figure 5) and examines whether a previously encoded image contains a block which may be used as a reference to the current block (block 505). If such a block is found from the reference frame memory 318, the motion estimator 365 may determine whether the current block could be predicted by using one or two (or more) reference blocks i.e. whether the current block could be a uni-predicted block or a bi-predicted block (block 506). If the motion estimator 365 has determined to use uni-prediction, the motion estimator 365 may indicate the reference block to the motion vector definer 361. If the motion estimator 365 has selected to use bi-prediction, the motion estimator 365 may indicate both reference blocks, or if more than two reference blocks have been selected, all the selected reference blocks to the motion vector definer 361. The motion vector definer 361 utilizes the reference block information and defines a motion vector (block 507) to indicate the correspondence between pixels of the current block and the reference block(s).

[0072] In some embodiments the inter predictor 306 calculates a cost value for both one-directional and bi-directional prediction and may then select which kind of prediction to use with the current block.

[0073] In some embodiments the motion vector may point to a full pixel sample or to a fraction pixel sample i.e. to a half pixel, to a quarter pixel or to a one-eighth pixel. The motion vector definer 361 may examine the type of the current block to determine whether the block is a bi-predicted block or another kind of a block (block 508). The type may be determined by the block type indication 366 which may be provided by the block selector 360 or another element of the encoder. If the type of the block is a bi-predicted block, two (or more) motion vectors are defined by the motion vector definer 361 (block 509). Otherwise, if the block is a uni-predicted block, one motion vector shall be defined (block 510).

[0074] It is also possible that the type of the block is determined before the motion vector is calculated.

[0075] The motion vector definer 361 provides motion vector information to the block processor 381 which uses this information to obtain the prediction signal.

Nokia Exhibit 2013, p.84
ASUS v. Nokia
IPR2025-01154

[0076] When the cost has been calculated with respect to intra prediction mode and possibly with respect to the inter prediction mode(s), the block processor 381 selects one intra prediction mode or the inter prediction mode for encoding the current block.

[0077] When the inter prediction mode was selected, the predicted pixel values or predicted pixel values quantized by the optional quantizer 384 are provided as the output of the mode selector.

[0078] The output of the mode selector is passed to a first summing device 321. The first summing device may subtract the pixel predictor 302 output from the image 300 to produce a first prediction error signal 320 which is input to the prediction error encoder 303.

[0079] The pixel predictor 302 further receives from a preliminary reconstructor 339 the combination of the prediction representation of the image block 312 and the output 338 of the prediction error decoder 304. The preliminary reconstructed image 314 may be passed to the intra-predictor 308 and to a filter 316. The filter 316 receiving the preliminary representation may filter the preliminary representation and output a final reconstructed image 340 which may be saved in a reference frame memory 318. The reference frame memory 318 may be connected to the inter-predictor 306 to be used as the reference image against which the future image 300 is compared in inter-prediction operations.

[0080] The operation of the pixel predictor 302 may be configured to carry out any known pixel prediction algorithm known in the art.

[0081] The pixel predictor 302 may also comprise a filter 385 to filter the predicted values before outputting them from the pixel predictor 302.

[0082] The operation of the prediction error encoder 303 and prediction error decoder 304 will be described hereafter in further detail. In the following examples the encoder generates images in terms of 16x16 pixel macroblocks which go to form the full image or picture. Thus, for the following examples the pixel predictor 302 outputs a series of predicted macroblocks of size 16x16 pixels and the first summing device 321 outputs a series of 16x16 pixel residual data macroblocks which may represent the difference between a first macro-block in the image 300 against a predicted macro-block (output of pixel predictor 302). It would be appreciated that other size macro blocks may be used.

[0083] The prediction error encoder 303 comprises a transform block 342 and a quantizer 344. The transform block 342 transforms the first prediction error signal 320 to a

Nokia Exhibit 2013, p.85
ASUS v. Nokia
IPR2025-01154

transform domain. The transform is, for example, the DCT transform. The quantizer 344 quantizes the transform domain signal, e.g. the DCT coefficients, to form quantized coefficients.

[0084] The entropy encoder 330 receives the output of the prediction error encoder and may perform a suitable entropy encoding/variable length encoding on the signal to provide error detection and correction capability. Any suitable entropy encoding algorithm may be employed.

[0085] The prediction error decoder 304 receives the output from the prediction error encoder 303 and performs the opposite processes of the prediction error encoder 303 to produce a decoded prediction error signal 338 which when combined with the prediction representation of the image block 312 at the second summing device 339 produces the preliminary reconstructed image 314. The prediction error decoder may be considered to comprise a dequantizer 346, which dequantizes the quantized coefficient values, e.g. DCT coefficients, to reconstruct the transform signal and an inverse transformation block 348, which performs the inverse transformation to the reconstructed transform signal wherein the output of the inverse transformation block 348 contains reconstructed block(s). The prediction error decoder may also comprise a macroblock filter (not shown) which may filter the reconstructed macroblock according to further decoded information and filter parameters.

[0086] The operation and implementation of the mode selector 310 is shown in further detail with respect to Figure 5. On the basis of the prediction signals from the output of the inter-predictor 306, the output of the intra-predictor 308 and/or the image signal 300 the block processor 381 determines which encoding mode to use to encode the current image block. This selection is depicted as the block 500 in figure 5. The block processor 381 may calculate a rate-distortion cost (RD) value or another cost value for the prediction signals which are input to the mode selector 310 and select such an encoding mode 503, 504 for which the determined cost is the smallest.

[0087] The mode selector 310 provides an indication of the encoding mode of the current block (501). The indication may be encoded and inserted to a bit stream or stored into a memory together with the image information.

[0088] If the intra-prediction mode is selected, the block is predicted by an intra-prediction method (503). Respectively, if the inter-prediction mode is selected, the block is predicted by an inter-prediction method (504-510).

Nokia Exhibit 2013, p.86
ASUS v. Nokia
IPR2025-01154

[0089] An example of the operation of the mode selector when the inter-prediction mode is selected and the type of the block is a bi-predicted block, is illustrated as a block diagram in figure 11. Motion vector information provided by the motion vector definer 361contains indication of a first reference block and a second reference block. In multi-prediction applications the motion vector information may contain indication of more than two reference blocks. The block processor 381 uses the motion vector information to determine which block is used as a first reference block for the current block and which block is used as a second reference block for the current block. The block processor 381 then uses some pixel values of the first reference block to obtain first prediction values and some pixel values of the second reference block to obtain second prediction values. For example, if a first motion vector points to a fraction of a pixel (a subpixel) illustrated by the square b in the example of figure 12, the block processor 381 may use pixel values of several full pixels on the same row, for example, than said fraction of the pixel to obtain a reference pixel value. The block processor 381 may use e.g. a P-tap filter such as a six-tap filter in which P pixel values of the reference block are used to calculate the prediction value. In the example of figure 12 these pixel values could be pixels E, F, G, H, I and J. The taps of the filter may be e.g. integer values. An example of such a six-tap filter is [1 -5 20 20 -5 1] / 32. Hence, the filter 1102 would receive 1101 the pixel values of pixels E, F, G, H, I and J and filter these values by the equation $P1 = (E_1-5*F_1+20*G_1+20*H_1-5*I_1+J_1)$, in which E_1 is the value of the pixel E in the first reference block, F_1 is the value of the pixel F in the first reference block, G_1 is the value of the pixel G in the first reference block, H_1 is the value of the pixel H in the first reference block, I_1 is the value of the pixel I in the first reference block, and J_1 is the value of the pixel J in the first reference block. In the first rounding offset insertion block 1103 a first rounding offset may be added to the value P1 i.e. P1 + rounding offset. Then, the sum may be shifted by the first shifting block 1104 to the right so that the precision of the sum becomes M bits. The precision M is higher than the precision of the expected prediction value. For example, pixel values and the prediction values may be represented by N bits wherein $M > N$. In some example implementations N is 8 bits and M is 16 bits but it is obvious that also other bit lengths can be used with the present invention.

[0090] The second prediction can be obtained similarly by the second filter 1106, which receives 1105 some pixel values of the second reference block. These pixel values are determined on the basis of the second motion vector. The second motion vector may point to the

Nokia Exhibit 2013, p.87
ASUS v. Nokia
IPR2025-01154

same pixel (or a fraction of the pixel) in the second reference block to which the first motion vector points in the first reference block (using the example above that pixel is the subpixel b) or to another full pixel or a subpixel in the second reference block. The second filter 1106 uses similar filter than the first filter 1102 and outputs the second filtering result P2. According to the example above the filter is a six-tap filter [1 -5 20 20 -5 1] / 32, wherein $P2 = (E_2 - 5*F_2+20*G_2+20*H_2-5*I_2+J_2)$, in which E_2 is the value of the pixel E in the second reference block, F_2 is the value of the pixel F in the second reference block, G_2 is the value of the pixel G in the second reference block, H_2 is the value of the pixel H in the second reference block, I_2 is the value of the pixel I in the second reference block, and J_2 is the value of the pixel J in the second reference block. In the second rounding offset insertion block 1107 the first rounding offset may be added to the value P2 i.e. P2 + rounding offset. Then, the sum may be shifted by the second shifting block 1108 to the right so that the precision of the sum becomes M bits.

[0091] In the combining block 1109 the two prediction values P1, P2 are combined e.g. by summing and the combined value is added with a second rounding value in the third rounding value insertion block 1110. The result is converted to a smaller precision e.g. by shifting bits of the result to the right y times in the third shifting block 1111. This corresponds with dividing the result by 2^y. After the conversion the precision of the prediction signal corresponds with the precision of the input pixel values. However, the intermediate results are at a higher precision, wherein possible rounding errors have a smaller effect to the prediction signal compared to existing methods such as the method illustrated in figure 10.

[0092] In an alternative embodiment the rounding offset is not added separately to the results of the first 1102 and the second filter 1106 but after combining the results in the combining block 1110. In this case the value of the rounding offset is twice the value of the first rounding offset because in the embodiment of figure 11 the first rounding offset is actually added twice, once to P1 and once to P2.

[0093] In some embodiments also the first shifting block 1105 and the second shifting block 1109 are not needed when the precision of registers which store the filtering results is sufficient without reducing the precision of the filtering results. In that case the third shifting block may need to shift the prediction result more than y bits to the right so that the right shifted value P has the same prediction than the input pixel values, for example 8 bits.

Nokia Exhibit 2013, p.88
ASUS v. Nokia
IPR2025-01154

[0094] In some other example embodiments may partly differ from the above. For example, if a motion vector of one of the prediction directions point to an integer sample, the bit-depth of prediction samples with integer accuracy may be increased by shifting the samples to the left so that the filtering can be performed with values having the same precision.

[0095] Samples of each one of the prediction directions could be rounded at an intermediate step to a bit-depth that is still larger than the input bit-depth to make sure all the intermediate values fit to registers of certain length, e.g. 16-bit registers. For example, let's consider the same example above but using filter taps: {3, -17, 78, 78, -17, 3}. Then P1 and P2 are obtained as:

$P1 = (3*E_1-17*F_1+78*G_1+78*H_1-17*I_1+3*J_1 + 1) >> 1$

$P2 = (3*E_2-17*F_2+78*G_2+78*H_2-17*I_2+3*J_2 + 1) >> 1$

The bi-directional prediction signal may then be obtained using:

$P = (P1 + P2 + 32) >> 6.$

[0096] When a motion vector points between two full pixels i.e. to a fraction of the pixel, the value for that the reference pixel value may be obtained in several ways. Some possibilities were disclosed above but in the following some further non-limiting examples shall be provided with reference to figure 12.

[0097] If a motion vector points to the block labeled j the corresponding reference pixel value could be obtained by using full pixel values on the same diagonal than j, or by a two-phase process in which e.g. pixel values of rows around the block j are used to calculate a set of intermediate results and then these intermediate results could be filtered to obtain the reference pixel value. In an example embodiment the full pixel values A and B could be used to calculate a first intermediate result to represent a fraction pixel value aa, full pixel values C and D could be used to calculate a second intermediate result to represent a fraction pixel value bb, and full pixel values E to J could be used to calculate a third intermediate result to represent a fraction pixel value b. Similarly, fourth, fifth and sixth intermediate values to represent fraction pixel values s, gg, hh could be calculated on the basis of full pixel values K to Q; R, S; and T, U. These intermediate results could then be filtered by a six-tap filter, for example.

[0098] The prediction signal P obtained by the above described operations need not be provided to a decoder but the encoder uses this information to obtain predicted blocks and prediction error. The prediction error may be provided to the decoder so that the decoder can use

Nokia Exhibit 2013, p.89
ASUS v. Nokia
IPR2025-01154

corresponding operations to obtain the predicted blocks by prediction and correct the prediction results on the basis of the prediction error. The encoder may also provide motion vector information to the decoder.

[0099] In an example embodiment, as is depicted in figure 9, the bit stream of an image comprises an indication of the beginning of an image 910, image information of each block of the image 920, and indication of the end of the image 930. The image information of each block of the image 920 may include a block type indicator 932, and motion vector information 933. It is obvious that the bit stream may also comprise other information. Further, this is only a simplified image of the bit stream and in practical implementations the contents of the bit stream may be different from what is depicted in figure 9.

[00100] The bit stream may further be encoded by the entropy encoder 330.

[00101] Although the embodiments above have been described with respect to the size of the macroblock being 16x16 pixels, it would be appreciated that the methods and apparatus described may be configured to handle macroblocks of different pixel sizes.

[00102] In the following the operation of an example embodiment of the decoder 600 is depicted in more detail with reference to figure 6.

[00103] At the decoder side similar operations are performed to reconstruct the image blocks. Figure 6 shows a block diagram of a video decoder suitable for employing embodiments of the invention and Figure 7 shows a flow diagram of an example of a method in the video decoder. The decoder shows an entropy decoder 600 which performs an entropy decoding on the received signal. The entropy decoder thus performs the inverse operation to the entropy encoder 330 of the encoder described above. The entropy decoder 600 outputs the results of the entropy decoding to a prediction error decoder 602 and a pixel predictor 604.

[00104] The pixel predictor 604 receives the output of the entropy decoder 600. The output of the entropy decoder 600 may include an indication on the prediction mode used in encoding the current block. A predictor selector 614 within the pixel predictor 604 determines that an intra-prediction, an inter-prediction, or interpolation operation is to be carried out. The predictor selector may furthermore output a predicted representation of an image block 616 to a first combiner 613. The predicted representation of the image block 616 is used in conjunction with the reconstructed prediction error signal 612 to generate a preliminary reconstructed image 618. The preliminary reconstructed image 618 may be used in the predictor 614 or may be

Nokia Exhibit 2013, p.90
ASUS v. Nokia
IPR2025-01154

passed to a filter 620. The filter 620 applies a filtering which outputs a final reconstructed signal 622. The final reconstructed signal 622 may be stored in a reference frame memory 624, the reference frame memory 624 further being connected to the predictor 614 for prediction operations.

[00105] The prediction error decoder 602 receives the output of the entropy decoder 600. A dequantizer 692 of the prediction error decoder 602 may dequantize the output of the entropy decoder 600 and the inverse transform block 693 may perform an inverse transform operation to the dequantized signal output by the dequantizer 692. The output of the entropy decoder 600 may also indicate that prediction error signal is not to be applied and in this case the prediction error decoder produces an all zero output signal.

[00106] The decoder selects the 16x16 pixel residual macroblock to reconstruct. The selection of the 16x16 pixel residual macroblock to be reconstructed is shown in step 700.

[00107] The decoder receives information on the encoding mode used when the current block has been encoded. The indication is decoded, when necessary, and provided to the reconstruction processor 691 of the prediction selector 614. The reconstruction processor 691 examines the indication (block 701 in figure 7) and selects one of the intra-prediction modes (block 703), if the indication indicates that the block has been encoded using intra-prediction, or an inter-prediction mode (blocks 704—711), if the indication indicates that the block has been encoded using inter-prediction.

[00108] If the current block has been encoded using inter-prediction, the pixel predictor 604 may operate as follows. The pixel predictor 604 receives motion vector information (block 704). The pixel predictor 604 also receives (block 705) block type information and examines whether the block is a bi-predicted block or not (block 706). If the block type is a bi-predicted block, the pixel predictor 604 examines the motion vector information to determine which reference frames and reference block in the reference frames have been used in the construction of the motion vector information. The reconstruction processor 691 calculates the motion vectors (709) and uses the value of the (fraction of the) pixel of the reference blocks to which the motion vectors point to obtain a motion compensated prediction (710) and combines the prediction error with the value to obtain a reconstructed value of a pixel of the current block (block 711).

[00109] If the block type is a uni-predicted block, the pixel predictor 604 examines the motion vector information to determine which reference frame and reference block in the

Nokia Exhibit 2013, p.91
ASUS v. Nokia
IPR2025-01154

reference frame has been used in the construction of the motion vector information. The reconstruction processor 691 calculates the motion vector (707) and uses the value of the (fraction of the) pixel of the reference block to which the motion vector points to obtain a motion compensated prediction (708) and combines the prediction error with the value to obtain a reconstructed value of a pixel of the current block (block 711).

[00110] When the motion vector does not point to a full pixel sample in the reference block, the reconstruction processor 691 calculates using e.g. a one-directional interpolation or P-tap filtering (e.g. six-tap filtering) to obtain the values of the fractional pixels. Basically, the operations may be performed in the same way than in the encoder i.e. maintaining the higher accuracy values during the filtering until in the final rounding operation the accuracy may be decreased to the accuracy of the input pixels. Therefore, the effect of possible rounding errors may not be so large to the predicted values than in known methods.

[00111] The above described procedures may be repeated to each pixel of the current block to obtain all reconstructed pixel values for the current block.

[00112] In some embodiments the reconstruction processor 691 use the interpolator 694 to perform the calculation of the fractional pixel values.

[00113] In some embodiments the reconstruction processor 691 provides the fractional pixel values to the predictor 695 which combines the fractional pixel values with prediction error to obtain the reconstructed values of the pixels of the current block.

[00114] In some embodiments the interpolation may also be performed by using full pixel values, half pixel values, and/or quarter pixel values which may have been stored into a reference frame memory. For example, the encoder or the decoder may comprise a reference frame memory in which the full pixel samples, half pixel values and quarter pixel values can be stored.

[00115] Furthermore, in some embodiments the type of the block may also be a multi-predicted block wherein the prediction of a block may be based on more than two reference blocks.

[00116] The embodiments of the invention described above describe the codec in terms of separate encoder and decoder apparatus in order to assist the understanding of the processes involved. However, it would be appreciated that the apparatus, structures and operations may be

Nokia Exhibit 2013, p.92
ASUS v. Nokia
IPR2025-01154

implemented as a single encoder-decoder apparatus/structure/operation. Furthermore in some embodiments of the invention the coder and decoder may share some or all common elements.

[00117] Although the above examples describe embodiments of the invention operating within a codec within an electronic device, it would be appreciated that the invention as described below may be implemented as part of any video codec. Thus, for example, embodiments of the invention may be implemented in a video codec which may implement video coding over fixed or wired communication paths.

[00118] Thus, user equipment may comprise a video codec such as those described in embodiments of the invention above.

[00119] It shall be appreciated that the term user equipment is intended to cover any suitable type of wireless user equipment, such as mobile telephones, portable data processing devices or portable web browsers.

[00120] Furthermore elements of a public land mobile network (PLMN) may also comprise video codecs as described above.

[00121] In general, the various embodiments of the invention may be implemented in hardware or special purpose circuits, software, logic or any combination thereof. For example, some aspects may be implemented in hardware, while other aspects may be implemented in firmware or software which may be executed by a controller, microprocessor or other computing device, although the invention is not limited thereto. While various aspects of the invention may be illustrated and described as block diagrams, flow charts, or using some other pictorial representation, it is well understood that these blocks, apparatus, systems, techniques or methods described herein may be implemented in, as non-limiting examples, hardware, software, firmware, special purpose circuits or logic, general purpose hardware or controller or other computing devices, or some combination thereof.

[00122] The embodiments of this invention may be implemented by computer software executable by a data processor of the mobile device, such as in the processor entity, or by hardware, or by a combination of software and hardware. Further in this regard it should be noted that any blocks of the logic flow as in the Figures may represent program steps, or interconnected logic circuits, blocks and functions, or a combination of program steps and logic circuits, blocks and functions. The software may be stored on such physical media as memory

Nokia Exhibit 2013, p.93
ASUS v. Nokia
IPR2025-01154

chips, or memory blocks implemented within the processor, magnetic media such as hard disk or floppy disks, and optical media such as for example DVD and the data variants thereof, CD.

[00123] The memory may be of any type suitable to the local technical environment and may be implemented using any suitable data storage technology, such as semiconductor-based memory devices, magnetic memory devices and systems, optical memory devices and systems, fixed memory and removable memory. The data processors may be of any type suitable to the local technical environment, and may include one or more of general purpose computers, special purpose computers, microprocessors, digital signal processors (DSPs) and processors based on multi-core processor architecture, as non-limiting examples.

[00124] Embodiments of the inventions may be practiced in various components such as integrated circuit modules. The design of integrated circuits is by and large a highly automated process. Complex and powerful software tools are available for converting a logic level design into a semiconductor circuit design ready to be etched and formed on a semiconductor substrate.

[00125] Programs, such as those provided by Synopsys, Inc. of Mountain View, California and Cadence Design, of San Jose, California automatically route conductors and locate components on a semiconductor chip using well established rules of design as well as libraries of pre-stored design modules. Once the design for a semiconductor circuit has been completed, the resultant design, in a standardized electronic format (e.g., Opus, GDSII, or the like) may be transmitted to a semiconductor fabrication facility or "fab" for fabrication.

[00126] The foregoing description has provided by way of exemplary and non-limiting examples a full and informative description of the exemplary embodiment of this invention. However, various modifications and adaptations may become apparent to those skilled in the relevant arts in view of the foregoing description, when read in conjunction with the accompanying drawings and the appended claims. However, all such and similar modifications of the teachings of this invention will still fall within the scope of this invention.

[00127] A method according to a first embodiment comprises:

determining a block of pixels of a video representation encoded in a bitstream, values of said pixels having a first precision;

determining a type of the block;

if the determining indicates that the block is a block predicted by using two or more reference blocks,

Nokia Exhibit 2013, p.94
ASUS v. Nokia
IPR2025-01154

determining a first reference pixel location in a first reference block and a second reference pixel location in a second reference block;

using said first reference pixel location to obtain a first prediction, said first prediction having a second precision, which is higher than said first precision;

using said second reference pixel location to obtain a second prediction, said second prediction having the second precision, which is higher than said first precision;

combining said first prediction and said second prediction to obtain a combined prediction; and

decreasing the precision of said combined prediction to said first precision.

[00128] In some methods according to the first embodiment a first rounding offset is inserted to said first prediction and said second prediction.

[00129] In some methods according to the first embodiment the precision of said first prediction and said second prediction is reduced to an intermediate prediction after adding said first rounding offset, said intermediate prediction being higher than said first precision.

[00130] In some methods according to the first embodiment a second rounding offset is inserted to the combined prediction before said decreasing.

[00131] In some methods according to the first embodiment said type of the block is a bi-directional block.

[00132] In some methods according to the first embodiment said type of the block is a multidirectional block.

[00133] In some methods according to the first embodiment the first rounding offset is 2^y, and said decreasing comprises right shifting the combined prediction y+1 bits.

[00134] In some methods according to the first embodiment the first precision is 8 bits.

[00135] In some methods according to the first embodiment the value of y is 5.

[00136] In some methods according to the first embodiment said first prediction and said second prediction are obtained by filtering pixel values of said reference blocks.

[00137] In some methods according to the first embodiment the filtering is performed by a P-tap filter.

[00138] An apparatus according to a second embodiment comprises:

a processor; and

a memory unit operatively connected to the processor and including:

Nokia Exhibit 2013, p.95
ASUS v. Nokia
IPR2025-01154

computer code configured to determine a block of pixels of a video representation encoded in a bitstream, values of said pixels having a first precision;

computer code configured to determine a type of the block;

computer code configured to, if the determining indicates that the block is a block predicted by using two or more reference blocks,

determine a first reference pixel location in a first reference block and a second reference pixel location in a second reference block;

use said first reference pixel location to obtain a first prediction, said first prediction having a second precision, which is higher than said first precision;

use said second reference pixel location to obtain a second prediction, said second prediction having the second precision, which is higher than said first precision;

combine said first prediction and said second prediction to obtain a combined prediction; and

decrease the precision of said combined prediction to said first precision.

[00139] In some apparatuses according to the second embodiment the computer code is further configured to insert a first rounding offset to said first prediction and said second prediction.

[00140] In some apparatuses according to the second embodiment the computer code is further configured to reduce the precision of said first prediction and said second prediction to an intermediate prediction after adding said first rounding offset, said intermediate prediction being higher than said first precision.

[00141] In some apparatuses according to the second embodiment the computer code is further configured to insert a second rounding offset to the combined prediction before said decreasing.

[00142] In some apparatuses according to the second embodiment said type of the block is a bi-directional block.

[00143] In some apparatuses according to the second embodiment said type of the block is a multidirectional block.

[00144] In some apparatuses according to the second embodiment the first rounding offset is 2^y, and said decreasing comprises right shifting the combined prediction y+1 bits.

Nokia Exhibit 2013, p.96
ASUS v. Nokia
IPR2025-01154

[00145] In some apparatuses according to the second embodiment the first precision is 8 bits.

[00146] In some apparatuses according to the second embodiment the value of y is 5.

[00147] In some apparatuses according to the second embodiment the computer code is further configured to obtain said first prediction and said second prediction by filtering pixel values of said reference blocks.

[00148] In some apparatuses according to the second embodiment said filtering comprises a P-tap filter.

[00149] According to a third embodiment there is provided a computer readable storage medium stored with code thereon for use by an apparatus, which when executed by a processor, causes the apparatus to:

determine a block of pixels of a video representation encoded in a bitstream, values of said pixels having a first precision;

determine a type of the block;

if the determining indicates that the block is a block predicted by using two or more reference blocks,

determine a first reference pixel location in a first reference block and a second reference pixel location in a second reference block;

use said first reference pixel location to obtain a first prediction, said first prediction having a second precision, which is higher than said first precision;

use said second reference pixel location to obtain a second prediction, said second prediction having the second precision, which is higher than said first precision;

combine said first prediction and said second prediction to obtain a combined prediction; and

decrease the precision of said combined prediction to said first precision.

[00150] According to a fourth embodiment there is provided at least one processor and at least one memory, said at least one memory stored with code thereon, which when executed by said at least one processor, causes an apparatus to perform:

determine a block of pixels of a video representation encoded in a bitstream, values of said pixels having a first precision;

determine a type of the block;

Nokia Exhibit 2013, p.97
ASUS v. Nokia
IPR2025-01154

if the determining indicates that the block is a block predicted by using two or more reference blocks,

determine a first reference pixel location in a first reference block and a second reference pixel location in a second reference block;

use said first reference pixel location to obtain a first prediction, said first prediction having a second precision, which is higher than said first precision;

use said second reference pixel location to obtain a second prediction, said second prediction having the second precision, which is higher than said first precision;

combine said first prediction and said second prediction to obtain a combined prediction; and

decrease the precision of said combined prediction to said first precision.

[00151] According to some example embodiments the apparatus is an encoder.

[00152] According to some example embodiments the apparatus is a decoder.

[00153] An apparatus according to a fifth embodiment comprises:

an input to determine a block of pixels of a video representation encoded in a bitstream, values of said pixels having a first precision;

a determinator to determine a type of the block; wherein if the determining indicates that the block is a block predicted by using two or more reference blocks, said determinator further to determine a first reference pixel location in a first reference block and a second reference pixel location in a second reference block;

a first predictor to use said first reference pixel location to obtain a first prediction, said first prediction having a second precision, which is higher than said first precision;

a second predictor to use said second reference pixel location to obtain a second prediction, said second prediction having the second precision, which is higher than said first precision;

a combiner to combine said first prediction and said second prediction to obtain a combined prediction; and

a shifter to decrease the precision of said combined prediction to said first precision.

[00154] An apparatus according to a sixth embodiment comprises:

means for determining a block of pixels of a video representation encoded in a bitstream, values of said pixels having a first precision;

Nokia Exhibit 2013, p.98
ASUS v. Nokia
IPR2025-01154

means for determining a type of the block;

means for determining a first reference pixel location in a first reference block and a second reference pixel location in a second reference block, if the determining indicates that the block is a block predicted by using two or more reference blocks;

means for using said first reference pixel location to obtain a first prediction, said first prediction having a second precision, which is higher than said first precision;

means for using said second reference pixel location to obtain a second prediction, said second prediction having the second precision, which is higher than said first precision;

means for combining said first prediction and said second prediction to obtain a combined prediction; and

means for decreasing the precision of said combined prediction to said first precision.

Nokia Exhibit 2013, p.99
ASUS v. Nokia
IPR2025-01154

WHAT IS CLAIMED IS:

1. A method for decoding or encoding video, the method comprising:

determining a coding type of a block of pixels of the video, values of said pixels having a first precision, wherein the first precision indicates the number of bits needed to represent values of said pixels;

if the determining indicates that the block is a block predicted by using two or more reference blocks, the reference blocks having said first precision:

determining a first reference pixel location in a first reference block and a second reference pixel location in a second reference block;

using said first reference pixel location to obtain a first prediction by interpolation, said first prediction having a second precision, which is higher than said first precision;

using said second reference pixel location to obtain a second prediction, said second prediction having the second precision, which is higher than said first precision, wherein the second precision indicates the number of bits needed to represent values of said first prediction and values of said second prediction;

obtaining a combined prediction based at least partly upon said first prediction and said second prediction; and

decreasing a precision of said combined prediction by shifting bits of the combined prediction to the right.

2 The method according to claim 1, wherein said second reference pixel location is an integer sample, and wherein said second prediction is obtained by shifting value of said second reference pixel location to the left.

3. The method according to claim 1 further comprising:

inserting a first rounding offset to said first prediction and said second prediction.

4. The method according to claim 3 further comprising:

inserting a second rounding offset to the combined prediction before said decreasing.

Nokia Exhibit 2013, p.100
ASUS v. Nokia
IPR2025-01154

5. The method according to claim 3, wherein the first rounding offset is 2^y, and said decreasing comprises right shifting the combined prediction y+1 bit.

6. The method according to claim 1 further comprising:

reducing the precision of said first prediction and said second prediction to an intermediate prediction after adding a first rounding offset, said intermediate prediction being higher than said first precision.

7. The method according to claim 1, wherein said type of the block is a bi-directional block or a multidirectional block.

8. An apparatus for decoding or encoding video, the apparatus comprising:

at least one processor and at least one memory including computer program code, the at least one memory and computer program code configured to, with the processor, cause the apparatus to:

determine an encoding type of a block of pixels of a video, values of said pixels having a first precision, wherein the first precision indicates the number of bits needed to represent values of said pixels;

wherein if the determining indicates that the block is a block predicted by using two or more reference blocks, the reference blocks having said first precision:

determine a first reference pixel location in a first reference block and a second reference pixel location in a second reference block;

use said first reference pixel location to obtain a first prediction by interpolation, said first prediction having a second precision, which is higher than said first precision;

use said second reference pixel location to obtain a second prediction, said second prediction having the second precision, which is higher than said first precision, wherein the second precision indicates the number of bits needed to represent values of said first prediction and values of said second prediction;

obtain a combined prediction based at least partly upon said first prediction and said second prediction; and

Nokia Exhibit 2013, p.101
ASUS v. Nokia
IPR2025-01154

decrease a precision of said combined prediction by shifting bits of the combined prediction to the right.

9. The apparatus according to claim 8, wherein said second reference pixel location is an integer sample, and wherein said second prediction is obtained by shifting value of said second reference pixel location to the left.

10. The apparatus according to claim 8, wherein the at least one memory and computer code are further configured to:

insert a first rounding offset to said first prediction and said second prediction.

11. The apparatus according to claim 10, wherein the at least one memory and computer code are further configured to:

insert a second rounding offset to the combined prediction before said decreasing.

12. The apparatus according to claim 10, wherein the first rounding offset is 2^y, and said decreasing comprises right shifting the combined prediction y+1 bits.

13. The apparatus according to claim 8, wherein the at least one memory and computer code are further configured to:

reduce the precision of said first prediction and said second prediction to an intermediate prediction after adding said first rounding offset, said intermediate prediction being higher than said first precision.

14. The apparatus according to claim 8, wherein said type of the block is a bi-directional block or a multidirectional block.

15. A computer program product for decoding or encoding video, the computer program product comprising at least one non-transitory computer readable storage medium having computer executable program code portions stored therein, the computer executable program code portions comprising program code instructions configured to:

Nokia Exhibit 2013, p.102
ASUS v. Nokia
IPR2025-01154

determine a coding type of a block of pixels of the video, values of said pixels having a first precision, wherein the first precision indicates the number of bits needed to represent values of said pixels;

if the determining indicates that the block is a block predicted by using two or more reference blocks, the reference blocks having said first precision:

determine a first reference pixel location in a first reference block and a second reference pixel location in a second reference block;

use said first reference pixel location to obtain a first prediction by interpolation, said first prediction having a second precision, which is higher than said first precision;

use said second reference pixel location to obtain a second prediction, said second prediction having the second precision, which is higher than said first precision, wherein the second precision indicates the number of bits needed to represent values of said first prediction and values of said second prediction;

obtain a combined prediction based at least partly upon said first prediction and said second prediction; and

decrease a precision of said combined prediction by shifting bits of the combined prediction to the right.

16. The computer program product according to claim 15, wherein said second reference pixel location is an integer sample, and wherein said second prediction is obtained by shifting value of said second reference pixel location to the left.

17. The computer program product according to claim 15 further comprising:

inserting a first rounding offset to said first prediction and said second prediction; and

inserting a second rounding offset to the combined prediction before said decreasing.

18. The computer program product according to claim 15, further comprising inserting a first rounding offset to said first prediction and said second prediction, wherein the first rounding offset is 2^y, and said decreasing comprises right shifting the combined prediction y+1 bit.

Nokia Exhibit 2013, p.103
ASUS v. Nokia
IPR2025-01154

19. An apparatus for decoding or encoding video, the apparatus comprising:

a determinator to determine a coding type of a block of pixels of the video, values of said pixels having a first precision, wherein the first precision indicates the number of bits needed to represent values of said pixels; wherein if the determining indicates that the block is a block predicted by using two or more reference blocks with the reference blocks having said first precision, said determinator further to determine a first reference pixel location in a first reference block and a second reference pixel location in a second reference block;

a first predictor to use said first reference pixel location to obtain a first prediction by interpolation, said first prediction having a second precision, which is higher than said first precision;

a second predictor to use said second reference pixel location to obtain a second prediction, said second prediction having the second precision, which is higher than said first precision, wherein the second precision indicates the number of bits needed to represent values of said first prediction and values of said second prediction;

a combiner to obtain a combined prediction based at least partly upon said first prediction and said second prediction; and

a shifter to decrease the precision of said combined prediction by shifting bits of the combined prediction to the right.

20. The apparatus according to claim 19, wherein said second reference pixel location is an integer sample, and wherein said second prediction is obtained by shifting value of said second reference pixel location to the left.

21. The apparatus according to claim 19 further configured to:

insert a first rounding offset to said first prediction and said second prediction; and

insert a second rounding offset to the combined prediction before said decreasing.

22. The apparatus according to claim 19, further configured to insert a first rounding offset to said first prediction and said second prediction, wherein the first rounding offset is 2^y, and said decreasing comprises right shifting the combined prediction y+1 bit.

Nokia Exhibit 2013, p.104
ASUS v. Nokia
IPR2025-01154

23. An apparatus for decoding or encoding video, the apparatus comprising:

means for determining a coding type of a block of pixels of the video, values of said pixels having a first precision, wherein the first precision indicates the number of bits needed to represent values of said pixels;

means for determining a first reference pixel location in a first reference block and a second reference pixel location in a second reference block, if the determining indicates that the block is a block predicted by using two or more reference blocks with the reference blocks having said first precision;

means for using said first reference pixel location to obtain a first prediction by interpolation, said first prediction having a second precision, which is higher than said first precision;

means for using said second reference pixel location to obtain a second prediction, said second prediction having the second precision, which is higher than said first precision, wherein the second precision indicates the number of bits needed to represent values of said first prediction and values of said second prediction;

means for obtaining a combined prediction based at least partly upon said first prediction and said second prediction; and

means for decreasing the precision of said combined prediction by shifting bits of the combined prediction to the right.

24. The apparatus according to claim 23, wherein said second reference pixel location is an integer sample, and wherein said second prediction is obtained by shifting value of said second reference pixel location to the left.

25. The apparatus according to claim 23 further comprising:

means for inserting a first rounding offset to said first prediction and said second prediction; and

means for inserting a second rounding offset to the combined prediction before said decreasing.

Nokia Exhibit 2013, p.105
ASUS v. Nokia
IPR2025-01154

26. The apparatus according to claim 23, further comprising means for inserting a first rounding offset to said first prediction and said second prediction, wherein the first rounding offset is 2^y, and said decreasing comprises right shifting the combined prediction y+1 bit.

Nokia Exhibit 2013, p.106
ASUS v. Nokia
IPR2025-01154

ABSTRACT

There is disclosed apparatuses, methods and computer programs for utilizing motion prediction in video coding. A block of pixels of a video representation encoded in a bitstream is read, and a type of the block is determined. If the determining indicates that the block is a block predicted by using two or more reference blocks, a first reference pixel location in a first reference block is determined and a second reference pixel location in a second reference block is determined. The first reference pixel location is used to obtain a first prediction. Said first prediction has a second precision, which is higher than the first precision. The second reference pixel location is used to obtain a second prediction, which also has the second precision. The first prediction and the second prediction are combined to obtain a combined prediction; and the precision of the combined prediction is reduced to the first precision.

Nokia Exhibit 2013, p.107
ASUS v. Nokia
IPR2025-01154

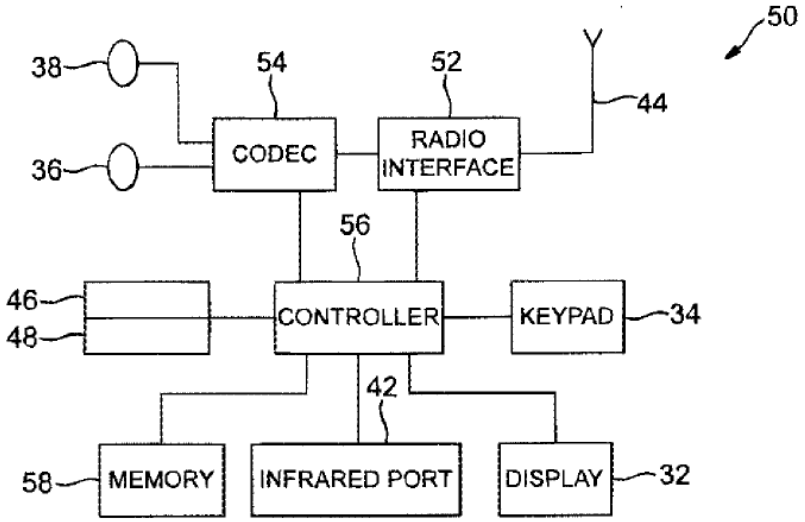
50
38
54
52
44
CODEC
RADIO INTERFACE
36
56
46
48
CONTROLLER
KEYPAD
34
42
58
MEMORY
INFRARED PORT
DISPLAY
32

FIG.1

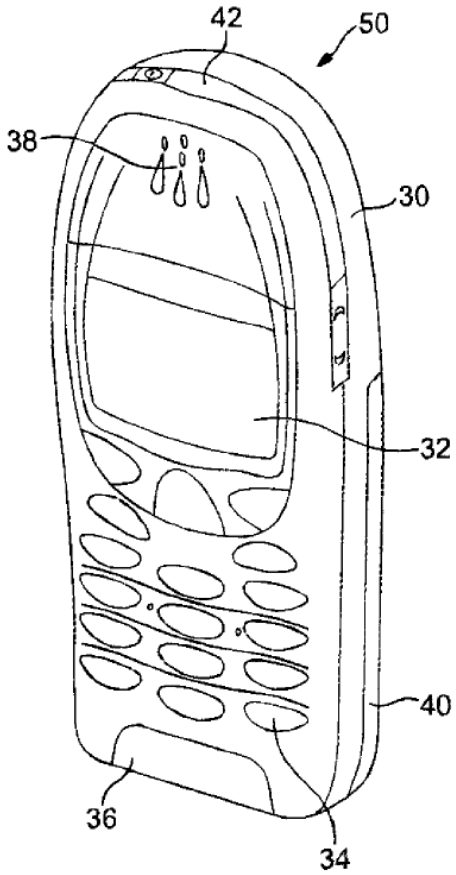
42
50
38
30
32
40
36
34

FIG. 2

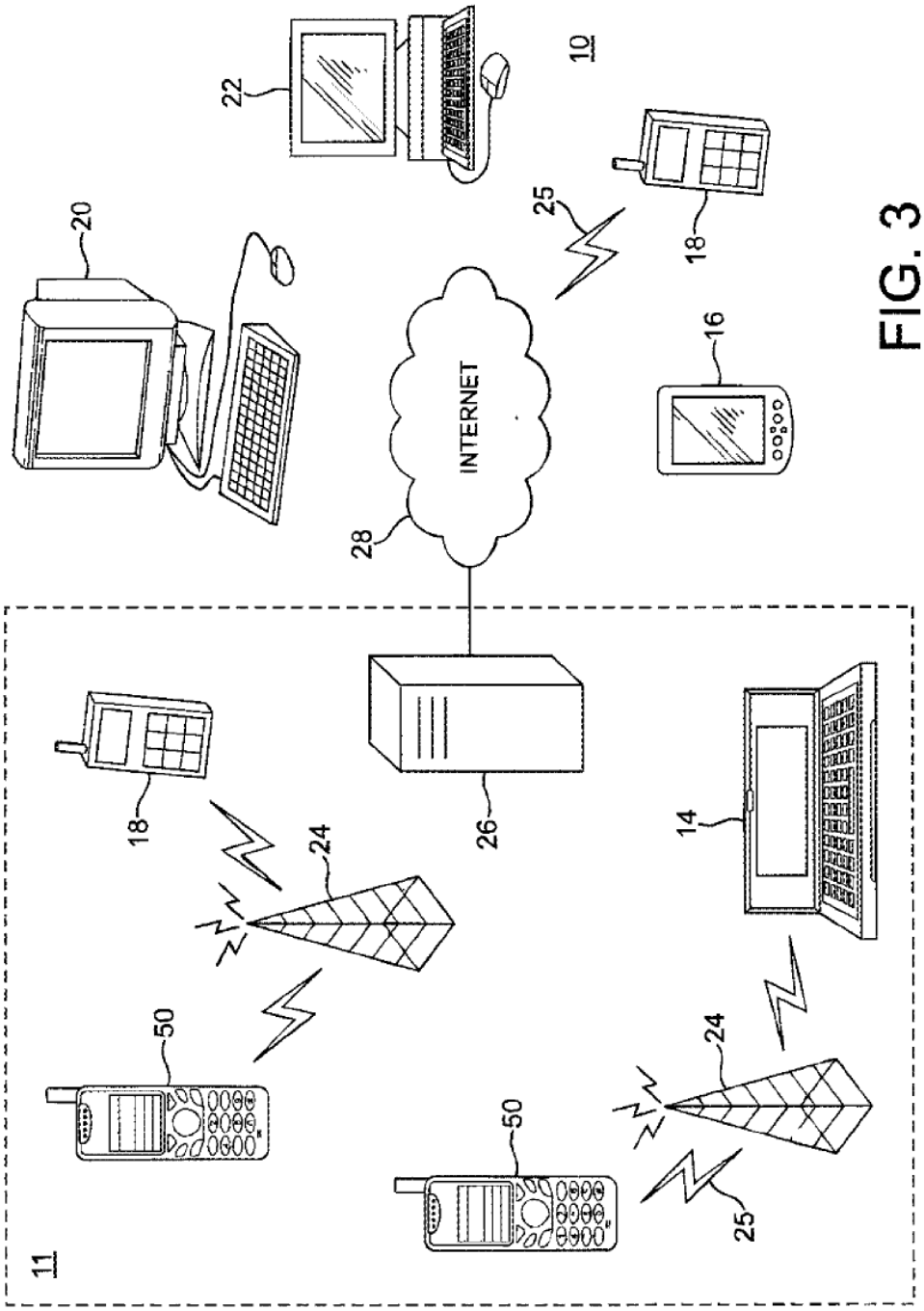

FIG. 3

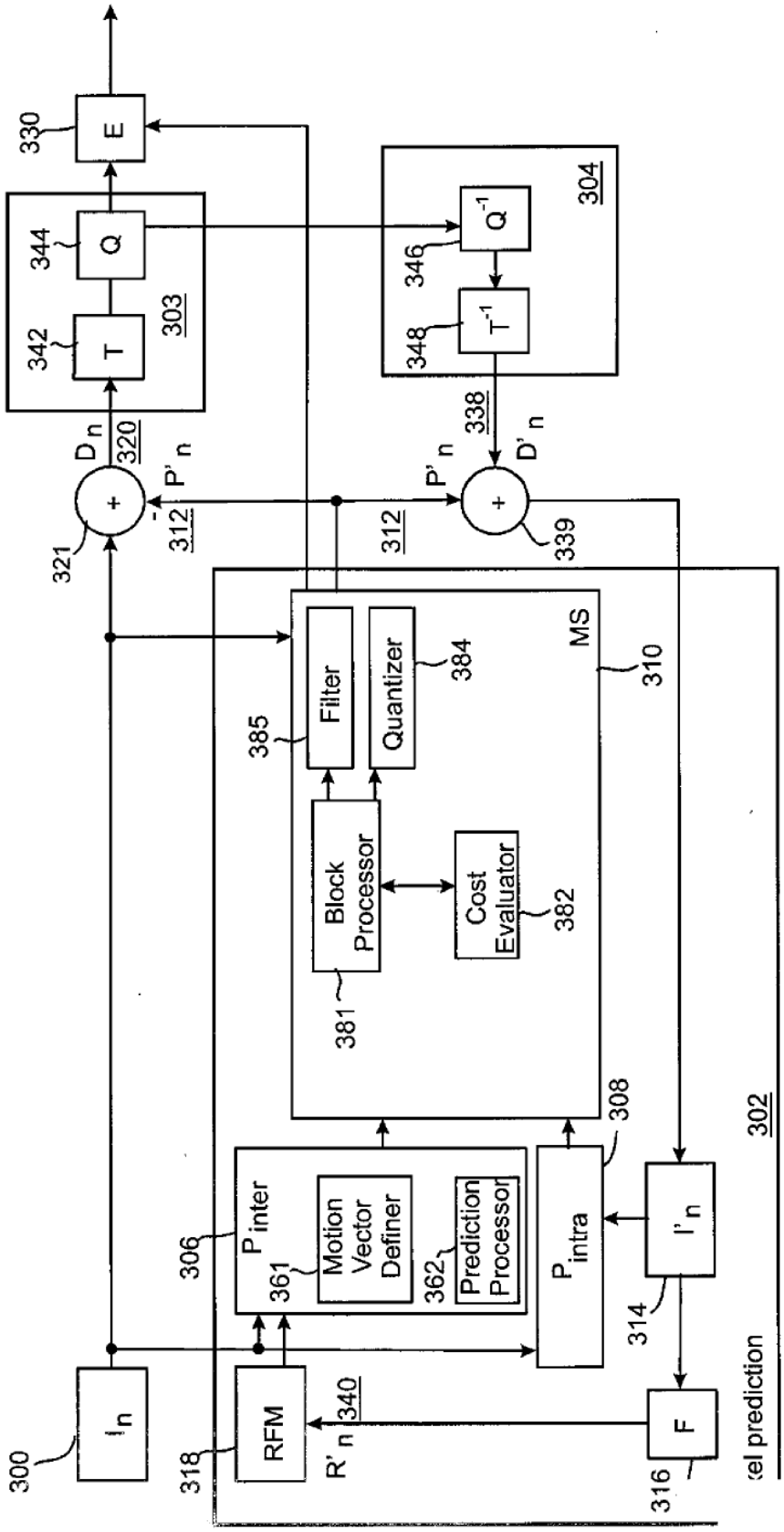

300
I_n
318
RFM
340
R' n
316
F
314
I'_n
308
P_{intra}
306
P_{inter}
361
Motion Vector Definer
362
Prediction Processor
302
310
MS
381
Block Processor
382
Cost Evaluator
385
Filter
384
Quantizer
339
+
312
321
+
320
D_n
P'_n
338
D'_n
342
T
303
344
Q
330
E
304
346
Q^{-1}
348
T^{-1}

Fig. 4a

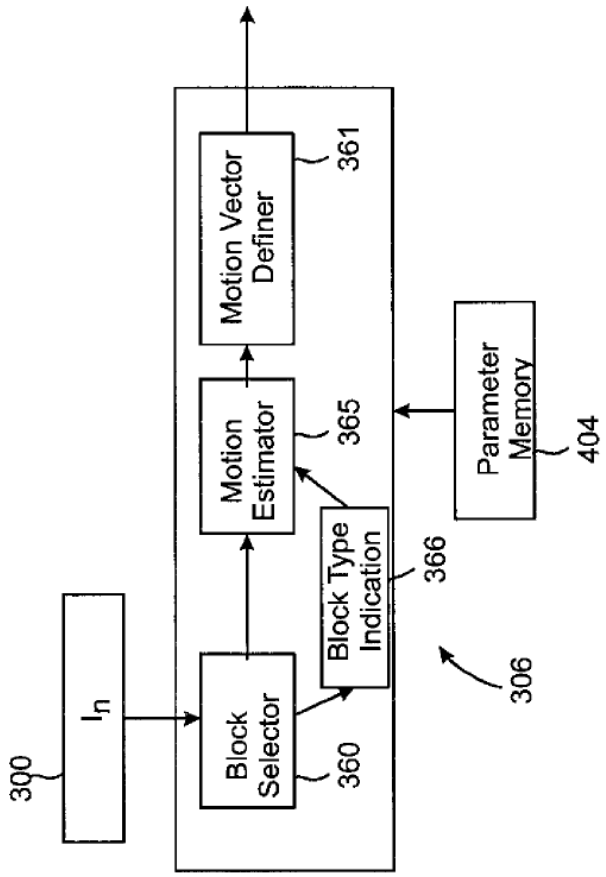
300
I_n
Block Selector
360
Motion Estimator
365
Motion Vector Definer
361
Block Type Indication
366
306
Parameter Memory
404

Fig. 4b

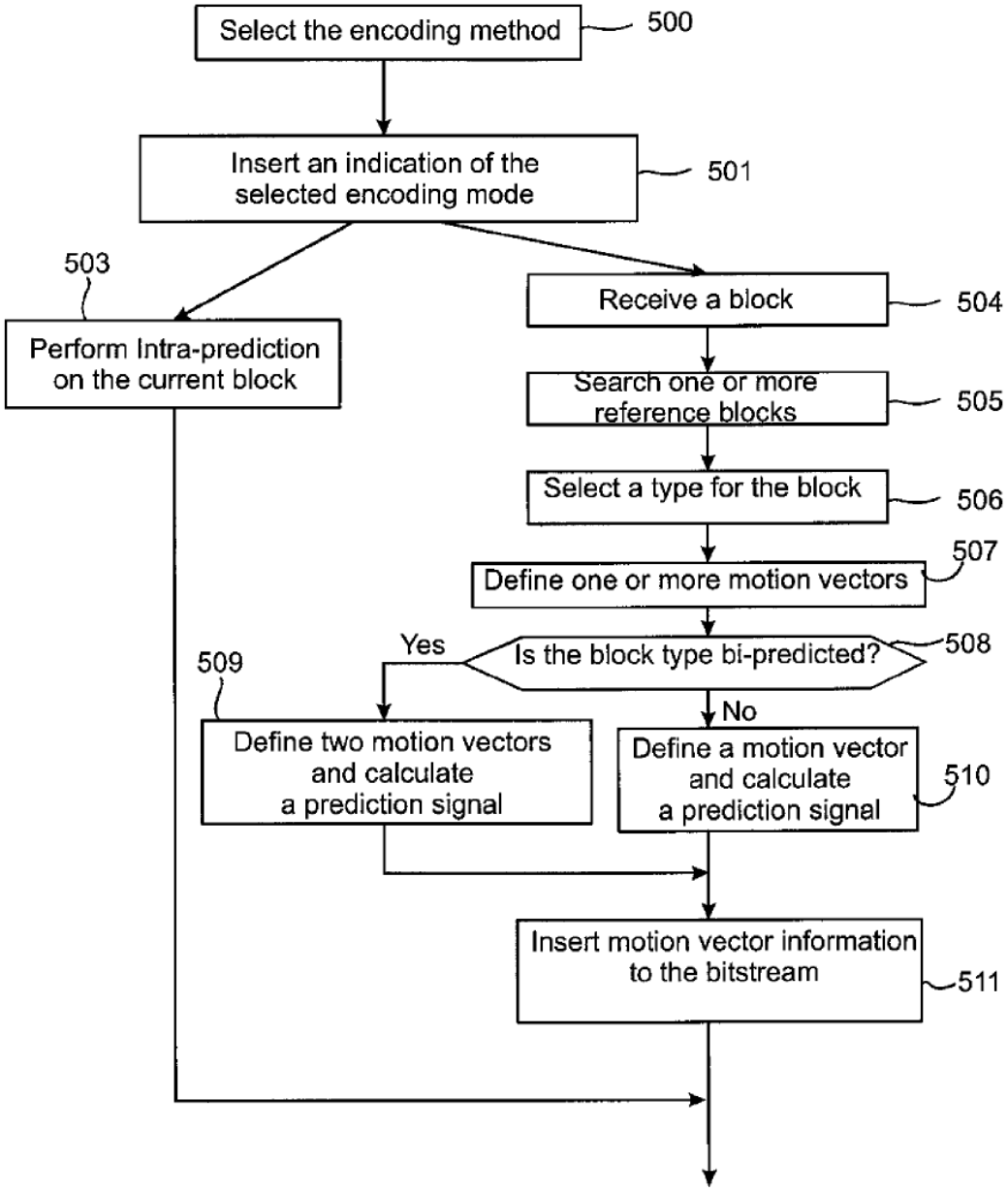
Select the encoding method
500
Insert an indication of the selected encoding mode
501
503
Perform Intra-prediction on the current block
Receive a block
504
Search one or more reference blocks
505
Select a type for the block
506
Define one or more motion vectors
507
Is the block type bi-predicted?
508
Yes
No
509
Define two motion vectors and calculate a prediction signal
Define a motion vector and calculate a prediction signal
510
Insert motion vector information to the bitstream
511

Fig. 5

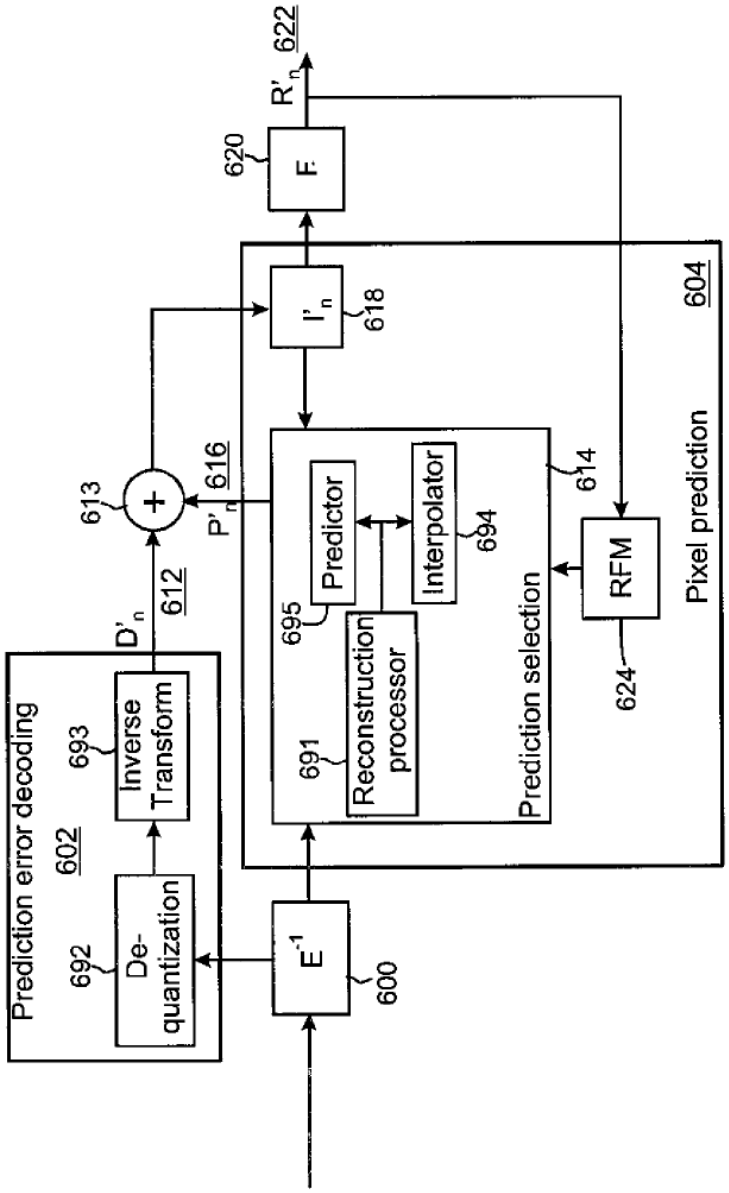
Prediction error decoding
602
692
De-quantization
693
Inverse Transform
D'n
612
613
+
P'n
616
E-1
600
I'n
618
F
620
R'n
622
Predictor
695
Reconstruction processor
691
Interpolator
694
Prediction selection
614
RFM
624
Pixel prediction
604

Fig. 6

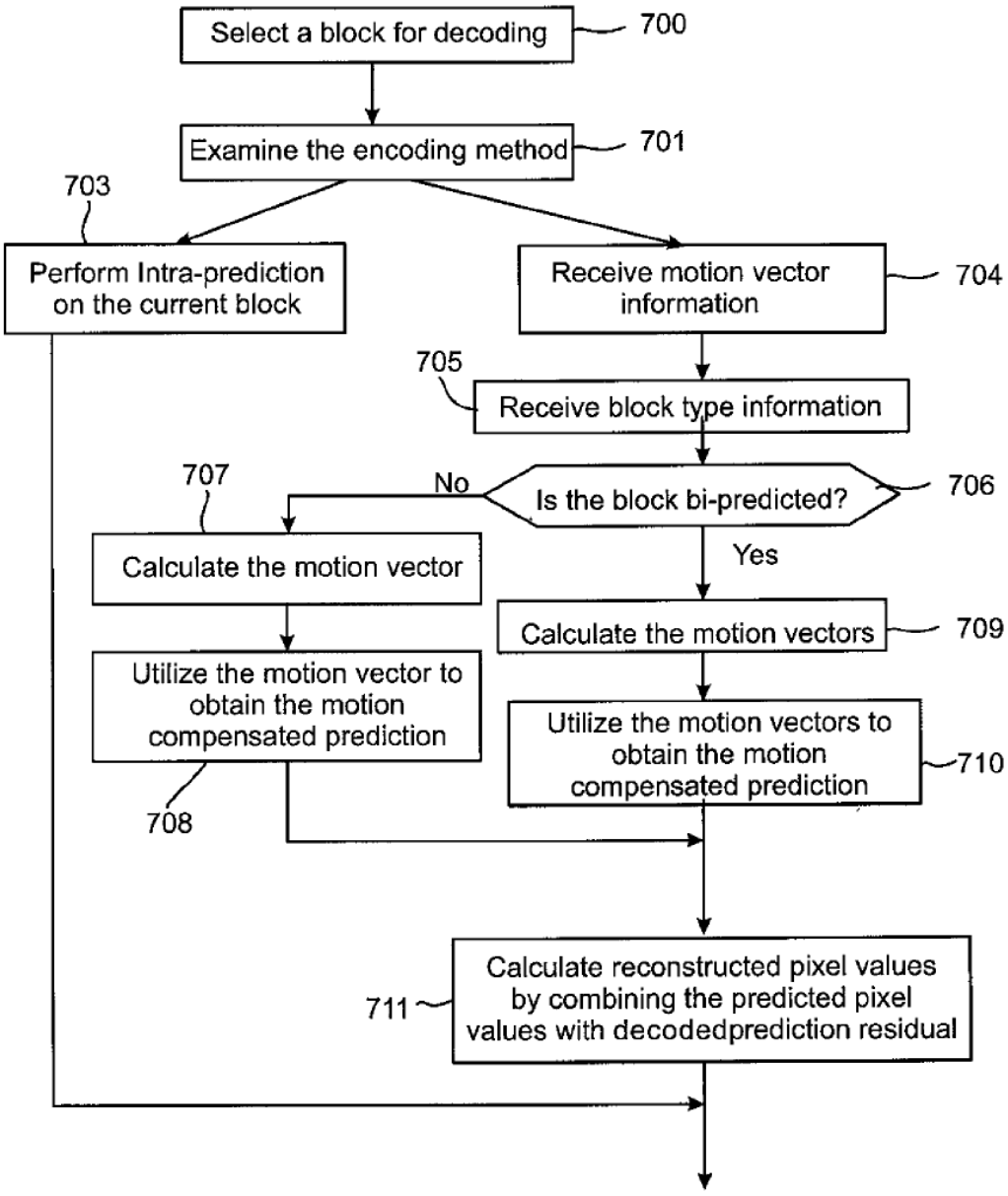
Select a block for decoding
700
Examine the encoding method
701
703
Perform Intra-prediction on the current block
Receive motion vector information
704
705
Receive block type information
707
No
Is the block bi-predicted?
706
Calculate the motion vector
Yes
Calculate the motion vectors
709
Utilize the motion vector to obtain the motion compensated prediction
Utilize the motion vectors to obtain the motion compensated prediction
710
708
Calculate reconstructed pixel values by combining the predicted pixel values with decodedprediction residual
711

Fig. 7

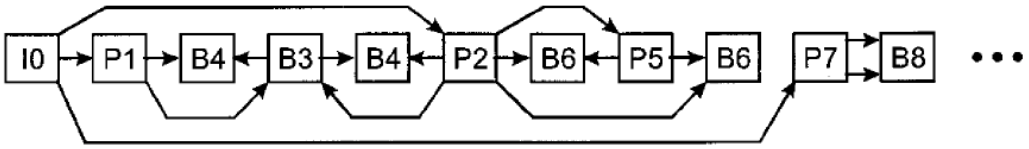

Fig. 8

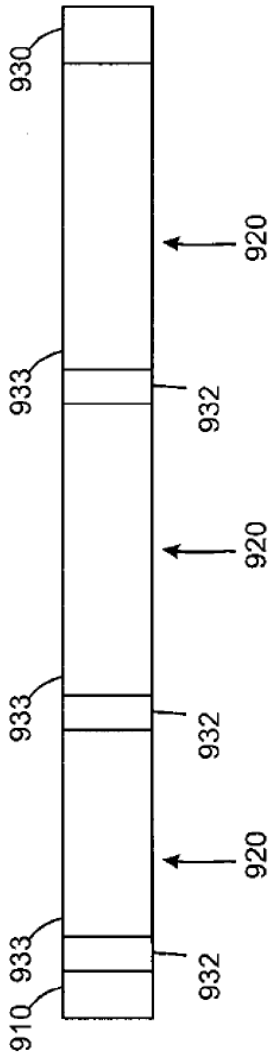
930
933
920
932
933
920
932
933
920
932
910

Fig. 9

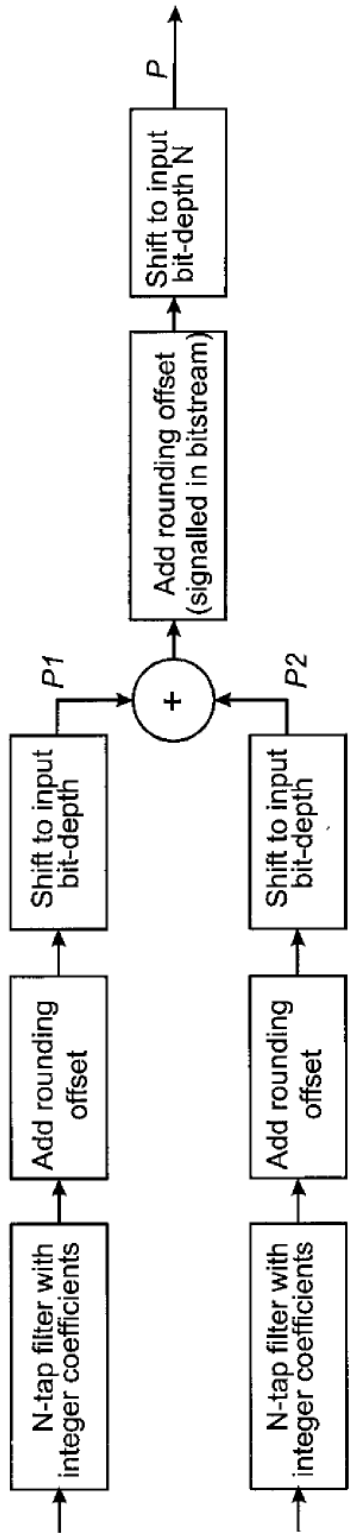
N-tap filter with integer coefficients
Add rounding offset
Shift to input bit-depth
P1
N-tap filter with integer coefficients
Add rounding offset
Shift to input bit-depth
P2
+
Add rounding offset (signalled in bitstream)
Shift to input bit-depth N
P

Fig. 10

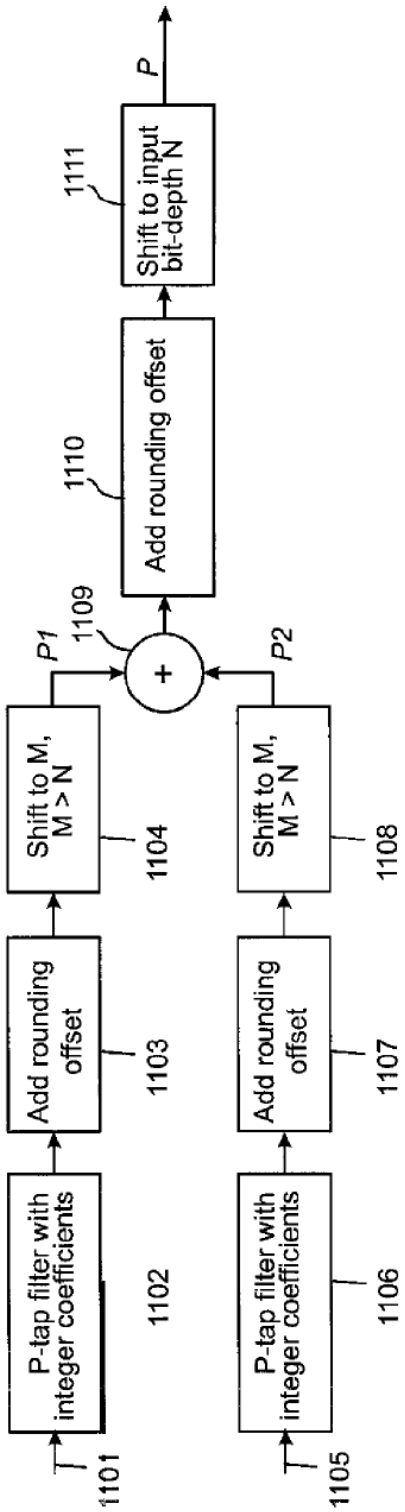
1101
P-tap filter with integer coefficients
1102
Add rounding offset
1103
Shift to M, M > N
1104
P1
1105
P-tap filter with integer coefficients
1106
Add rounding offset
1107
Shift to M, M > N
1108
P2
1109
+
1110
Add rounding offset
1111
Shift to input bit-depth N
P

Fig. 11

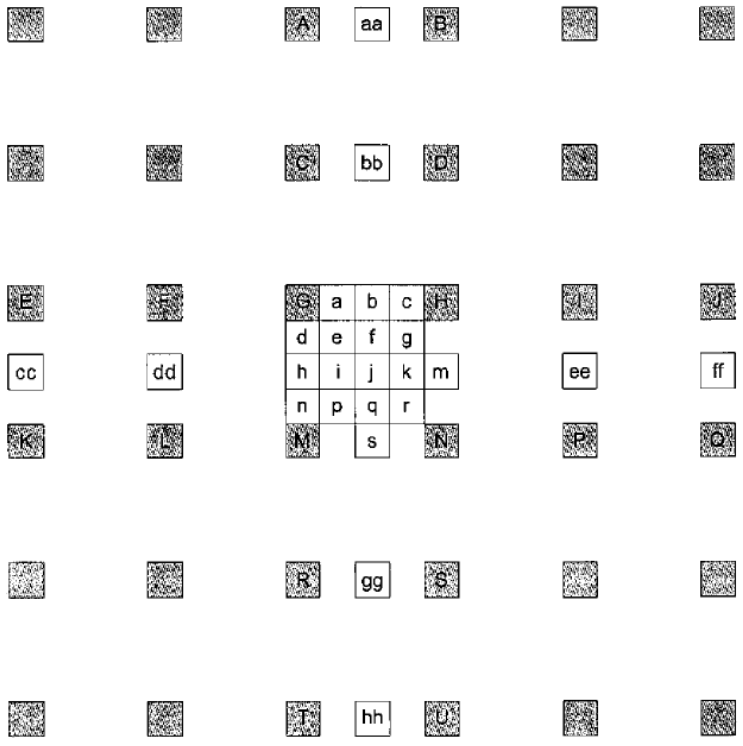
A
aa
B
C
bb
D
E
F
G
a
b
c
H
I
J
d
e
f
g
cc
dd
h
i
j
k
m
ee
ff
n
p
q
r
K
L
M
s
N
P
Q
R
gg
S
T
hh
U

Fig. 12

PTO/AIA/01 (06-12)
Approved for use through 01/31/2014. OMB 0651-0032
U.S. Patent and Trademark Office; U.S. DEPARTMENT OF COMMERCE
Under the Paperwork Reduction Act of 1995, no persons are required to respond to a collection of information unless it displays a valid OMB control number.

DECLARATION (37 CFR 1.63) FOR UTILITY OR DESIGN APPLICATION USING AN APPLICATION DATA SHEET (37 CFR 1.76)

Title of Invention	MOTION PREDICTION IN VIDEO CODING

As the below named inventor, I hereby declare that:

This declaration is directed to:

☐ The attached application, or

☒ United States application or PCT international application number 15/250124

filed on August 29, 2016.

The above-identified application was made or authorized to be made by me.

I believe that I am the original inventor or an original joint inventor of a claimed invention in the application.

I hereby acknowledge that any willful false statement made in this declaration is punishable under 18 U.S.C. 1001 by fine or imprisonment of not more than five (5) years, or both.

WARNING:

Petitioner/applicant is cautioned to avoid submitting personal information in documents filed in a patent application that may contribute to identity theft. Personal information such as social security numbers, bank account numbers, or credit card numbers (other than a check or credit card authorization form PTO-2038 submitted for payment purposes) is never required by the USPTO to support a petition or an application. If this type of personal information is included in documents submitted to the USPTO, petitioners/applicants should consider redacting such personal information from the documents before submitting them to the USPTO. Petitioner/applicant is advised that the record of a patent application is available to the public after publication of the application (unless a non-publication request in compliance with 37 CFR 1.213(a) is made in the application) or issuance of a patent. Furthermore, the record from an abandoned application may also be available to the public if the application is referenced in a published application or an issued patent (see 37 CFR 1.14). Checks and credit card authorization forms PTO-2038 submitted for payment purposes are not retained in the application file and therefore are not publicly available.

LEGAL NAME OF INVENTOR

Inventor: Kemal Ugur Date (Optional) :

Signature:

Note: An application data sheet (PTO/SB/14 or equivalent), including naming the entire inventive entity, must accompany this form. Use an additional PTO/AIA/01 form for each additional inventor.

This collection of information is required by 35 U.S.C. 115 and 37 CFR 1.63. The information is required to obtain or retain a benefit by the public which is to file (and by the USPTO to process) an application. Confidentiality is governed by 35 U.S.C. 122 and 37 CFR 1.11 and 1.14. This collection is estimated to take 1 minute to complete, including gathering, preparing, and submitting the completed application form to the USPTO. Time will vary depending upon the individual case. Any comments on the amount of time you require to complete this form and/or suggestions for reducing this burden, should be sent to the Chief Information Officer, U.S. Patent and Trademark Office, U.S. Department of Commerce, P.O. Box 1450, Alexandria, VA 22313-1450. DO NOT SEND FEES OR COMPLETED FORMS TO THIS ADDRESS. **SEND TO: Commissioner for Patents, P.O. Box 1450, Alexandria, VA 22313-1450.**

If you need assistance in completing the form, call 1-800-PTO-9199 and select option 2.

NC74925-US-CNT

PTO/AIA/01 (06-12)
Approved for use through 01/31/2014. OMB 0651-0032
U.S. Patent and Trademark Office; U.S. DEPARTMENT OF COMMERCE
Under the Paperwork Reduction Act of 1995, no persons are required to respond to a collection of information unless it displays a valid OMB control number.

DECLARATION (37 CFR 1.63) FOR UTILITY OR DESIGN APPLICATION USING AN APPLICATION DATA SHEET (37 CFR 1.76)

Title of Invention	MOTION PREDICTION IN VIDEO CODING

As the below named inventor, I hereby declare that:

This declaration is directed to:

☐ The attached application, or

☒ United States application or PCT international application number 15/250124

filed on August 29, 2016.

The above-identified application was made or authorized to be made by me.

I believe that I am the original inventor or an original joint inventor of a claimed invention in the application.

I hereby acknowledge that any willful false statement made in this declaration is punishable under 18 U.S.C. 1001 by fine or imprisonment of not more than five (5) years, or both.

WARNING:

Petitioner/applicant is cautioned to avoid submitting personal information in documents filed in a patent application that may contribute to identity theft. Personal information such as social security numbers, bank account numbers, or credit card numbers (other than a check or credit card authorization form PTO-2038 submitted for payment purposes) is never required by the USPTO to support a petition or an application. If this type of personal information is included in documents submitted to the USPTO, petitioners/applicants should consider redacting such personal information from the documents before submitting them to the USPTO. Petitioner/applicant is advised that the record of a patent application is available to the public after publication of the application (unless a non-publication request in compliance with 37 CFR 1.213(a) is made in the application) or issuance of a patent. Furthermore, the record from an abandoned application may also be available to the public if the application is referenced in a published application or an issued patent (see 37 CFR 1.14). Checks and credit card authorization forms PTO-2038 submitted for payment purposes are not retained in the application file and therefore are not publicly available.

LEGAL NAME OF INVENTOR

Inventor: Jani Lainema Date (Optional) :

Signature:

Note: An application data sheet (PTO/SB/14 or equivalent), including naming the entire inventive entity, must accompany this form. Use an additional PTO/AIA/01 form for each additional inventor.

This collection of information is required by 35 U.S.C. 115 and 37 CFR 1.63. The information is required to obtain or retain a benefit by the public which is to file (and by the USPTO to process) an application. Confidentiality is governed by 35 U.S.C. 122 and 37 CFR 1.11 and 1.14. This collection is estimated to take 1 minute to complete, including gathering, preparing, and submitting the completed application form to the USPTO. Time will vary depending upon the individual case. Any comments on the amount of time you require to complete this form and/or suggestions for reducing this burden, should be sent to the Chief Information Officer, U.S. Patent and Trademark Office, U.S. Department of Commerce, P.O. Box 1450, Alexandria, VA 22313-1450. DO NOT SEND FEES OR COMPLETED FORMS TO THIS ADDRESS. **SEND TO: Commissioner for Patents, P.O. Box 1450, Alexandria, VA 22313-1450.**

If you need assistance in completing the form, call 1-800-PTO-9199 and select option 2.

NC74925-US-CNT

PTO/AIA/01 (06-12)
Approved for use through 01/31/2014. OMB 0651-0032
U.S. Patent and Trademark Office; U.S. DEPARTMENT OF COMMERCE
Under the Paperwork Reduction Act of 1995, no persons are required to respond to a collection of information unless it displays a valid OMB control number.

DECLARATION (37 CFR 1.63) FOR UTILITY OR DESIGN APPLICATION USING AN APPLICATION DATA SHEET (37 CFR 1.76)

Title of Invention	MOTION PREDICTION IN VIDEO CODING

As the below named inventor, I hereby declare that:

This declaration is directed to:

☐ The attached application, or

☒ United States application or PCT international application number 15/250124

filed on August 29, 2016.

The above-identified application was made or authorized to be made by me.

I believe that I am the original inventor or an original joint inventor of a claimed invention in the application.

I hereby acknowledge that any willful false statement made in this declaration is punishable under 18 U.S.C. 1001 by fine or imprisonment of not more than five (5) years, or both.

WARNING:

Petitioner/applicant is cautioned to avoid submitting personal information in documents filed in a patent application that may contribute to identity theft. Personal information such as social security numbers, bank account numbers, or credit card numbers (other than a check or credit card authorization form PTO-2038 submitted for payment purposes) is never required by the USPTO to support a petition or an application. If this type of personal information is included in documents submitted to the USPTO, petitioners/applicants should consider redacting such personal information from the documents before submitting them to the USPTO. Petitioner/applicant is advised that the record of a patent application is available to the public after publication of the application (unless a non-publication request in compliance with 37 CFR 1.213(a) is made in the application) or issuance of a patent. Furthermore, the record from an abandoned application may also be available to the public if the application is referenced in a published application or an issued patent (see 37 CFR 1.14). Checks and credit card authorization forms PTO-2038 submitted for payment purposes are not retained in the application file and therefore are not publicly available.

LEGAL NAME OF INVENTOR

Inventor: Antti Hallapuro Date (Optional) :

Signature:

Note: An application data sheet (PTO/SB/14 or equivalent), including naming the entire inventive entity, must accompany this form. Use an additional PTO/AIA/01 form for each additional inventor.

This collection of information is required by 35 U.S.C. 115 and 37 CFR 1.63. The information is required to obtain or retain a benefit by the public which is to file (and by the USPTO to process) an application. Confidentiality is governed by 35 U.S.C. 122 and 37 CFR 1.11 and 1.14. This collection is estimated to take 1 minute to complete, including gathering, preparing, and submitting the completed application form to the USPTO. Time will vary depending upon the individual case. Any comments on the amount of time you require to complete this form and/or suggestions for reducing this burden, should be sent to the Chief Information Officer, U.S. Patent and Trademark Office, U.S. Department of Commerce, P.O. Box 1450, Alexandria, VA 22313-1450. DO NOT SEND FEES OR COMPLETED FORMS TO THIS ADDRESS. **SEND TO: Commissioner for Patents, P.O. Box 1450, Alexandria, VA 22313-1450.**

If you need assistance in completing the form, call 1-800-PTO-9199 and select option 2.

NC74925-US-CNT