UNITED STATES PATENT AND TRADEMARK OFFICE

BEFORE THE PATENT TRIAL AND APPEAL BOARD

GOOGLE LLC

Petitioner

v.

VALTRUS INNOVATIONS LIMITED

(record) Patent Owner

IPR2025-01157
Patent No. 7,939,967

PETITION FOR INTER PARTES REVIEW UNDER 35 U.S.C. §§ 311-319 AND 37 C.F.R. § 42.100 ET. SEQ

TABLE OF CONTENTS

I. INTRODUCTION 7

A. The ’967 Patent Disclosure 7

B. Prosecution History 9

II. CLAIM CONSTRUCTION 9

III. DETAILED EXPLANATION OF THE REASONS FOR UNPATENTABILITY 10

Ground 1. Claims 1-3, 8, and 14-15 are anticipated by Zak 10

A. Overview of Zak 10

B. Claim Mapping 11

Ground 2. Claims 1-7 and 9-15 are obvious over Susong 21

A. Overview of Susong 21

B. Overview of the Obviousness Contention 24

C. Rationale (Motivation) 24

D. Reasonable Expectation of Success 26

E. Graham Factors 26

F. Analogous Art 27

G. Claim Mapping 27

Ground 3. Claims 2, 8, 11, and 14-15 are obvious over Susong and Zak 44

A. Overview of the Obviousness Contention 45

B. Rationale (Motivation) 45

C. Reasonable Expectation of Success 47

D. Analogous art 47

E. Claim Mapping 47

Ground 4. Claims 1, 4-7, 9-10, and 13 are obvious over Chang 49

A. Overview of Chang 49

B. Overview of the Obviousness Contention 51

C. Rationale (Motivation) 51

D. Reasonable Expectation of Success 52

E. Analogous Art 53

F. Claim Mapping 53

Ground 5. Claims 1-15 are obvious over Chang and Edelen 65

A. Overview of the Obviousness Contention 66

B. Overview of Edelen 67

C. Rationale (Motivation) Supporting Obviousness 69

D. Reasonable Expectation of Success 72

E. Analogous Art 72

F. Claim Mapping 73

IV. CONCLUSION 79

TABLE OF EXHIBITS

Exhibit No.	Description
1001	U.S. Patent No. 7,939,967 B2 ("**the '967 patent**").
1002	Declaration of Dr. R. Jacob Baker.
1003	C.V. of Dr. R. Jacob Baker.
1004	File History of Pat. App. Ser. No. 12/491,773 (file history of the '967 patent).
1005	U.S. Pat. No. 5,631,814 ("**Zak**").
1006	U.S. Pat. App. Pub. 2005/0281057 A1 ("**Jung**").
1007	US Pat. App. Pub. 2009/0243391 Al ("**Susong**").
1008	U.S. Pat. App. Pub. 2003/0042798 ("**Chang**").
1009	U.S. Pat. App. Pub. 2006/0226706 ("**Edelen**").
1010	Plaintiff Valtrus Innovations Ltd. and Key Patent Innovations Limited's Opposition to Defendant Google LLC's Motion to Dismiss, *Valtrus Innovations Limited et al v. Google LLC*, Case No. 3-24-cv-03249 (N.D. Tex., filed May 8, 2025).

Petitioner respectfully requests *inter partes* review under 35 U.S.C. § 311 of claims 1-15 of U.S. Pat. No. 7,939,967 ("the '967 patent").

NOTICE OF LEAD AND BACKUP COUNSEL

Lead Counsel	**Backup Counsel**
Matthew A. Smith Reg. No. 49,003 SMITH BALUCH LLP (202) 669-6207 smith@smithbaluch.com	Elizabeth Laughton Reg. No. 70,484 SMITH BALUCH LLP (703) 585-8839 laughton@smithbaluch.com

NOTICE OF THE REAL-PARTIES-IN-INTEREST

The real-party-in-interest for this petition is Google LLC ("Google").[1]

NOTICE OF RELATED MATTERS

The '967 patent has been asserted in the following litigations:

Case	Status
Valtrus Innovations Limited et al v. TierPoint, LLC, Case No. 2-25-cv-00323 (E.D. Tex. April 1, 2025).	Active
Valtrus Innovations Limited et al v. Equinix, Inc., Case No. 2-25-cv-00016 (E.D. Tex. Jan. 07, 2025).	Active
Valtrus Innovations Limited et al v. Google LLC, Case No. 3-24-cv-03249 (N.D. Tex. Dec. 27, 2024).	Active

[1] Google LLC is a subsidiary of XXVI Holdings Inc., which is a subsidiary of Alphabet Inc. XXVI Holdings Inc. and Alphabet Inc. are not real parties-in-interest to this proceeding.

Valtrus Innovations Limited et al v. CyrusOne, LLC, Case No. 2-24-cv-00534 (E.D. Tex. Jul. 12, 2024).	Terminated
Valtrus Innovations Limited et al v. Digital Realty Trust, Inc. et al., Case No. 2-24-cv-00535 (E.D. Tex. Jul. 12, 2024).	Terminated
Valtrus Innovations Limited v. NTT Data Services, LLC et al, Case No. 2-24-cv-00361 (E.D. Tex. May. 14, 2024).	Active
Valtrus Innovations Limited v. CyrusOne, LLC, Case No. 2-24-cv-00259 (E.D. Tex. Apr. 17, 2024).	Terminated
Valtrus Innovations Limited v. Digital Realty Trust, Inc. et al, Case No. 2-24-cv-00139 (E.D. Tex. Feb. 27, 2024).	Terminated
Valtrus Innovations Limited v. Dawn Acquisitions LLC d/b/a Evoque Data Center Solutions, Case No. 2-24-cv-00142 (E.D. Tex. Feb. 27, 2024).	Terminated

NOTICE OF SERVICE INFORMATION

Please address all correspondence to the lead counsel at the addresses shown above. Petitioner consents to electronic service by email at: smith@smithbaluch.com, and laughton@smithbaluch.com.

GROUNDS FOR STANDING

Petitioner hereby certifies that the ’967 patent is available for *inter partes* review, and that Petitioner is not barred or estopped from requesting an *inter partes* review on the Grounds identified in the petition.

STATEMENT OF PRECISE RELIEF REQUESTED

Petitioner respectfully requests that claims 1-15 of the ’967 patent be canceled based on the following Grounds:

Ground 1: Claims 1-3, 8, and 14-15 are anticipated by Zak.

Ground 2: Claims 1-7, and 9-15 are obvious over Susong.

Ground 3: Claims 2, 8, 11, and 14-15 are obvious over Susong and Zak.

Ground 4: Claims 1, 4-7, 9-10, and 13 are obvious over Chang.

Ground 5: Claims 1-15 are obvious over Chang and Edelen.

THRESHOLD REQUIREMENT FOR INTER PARTES REVIEW

This petition presents "a reasonable likelihood that the Petitioners would prevail with respect to at least one of the claims challenged in the petition," 35 U.S.C. § 314(a), as shown in the Grounds below.

I. INTRODUCTION

A. The '967 Patent Disclosure

The '967 patent, filed in 2009, is directed to the (abstract) idea of redundant power supplies for alerting and handling of power failures. (EX1001, 1:32-42)(EX1002, ¶24). Certain power supplies provide power to devices (called "loads") for which it is important to ensure continuous electrical power, even if a source of power fails. To address this, the '967 uses two *different* sources of power energizing two "power supplies", where either power supply can supply power to the load, as shown in Fig. 1:

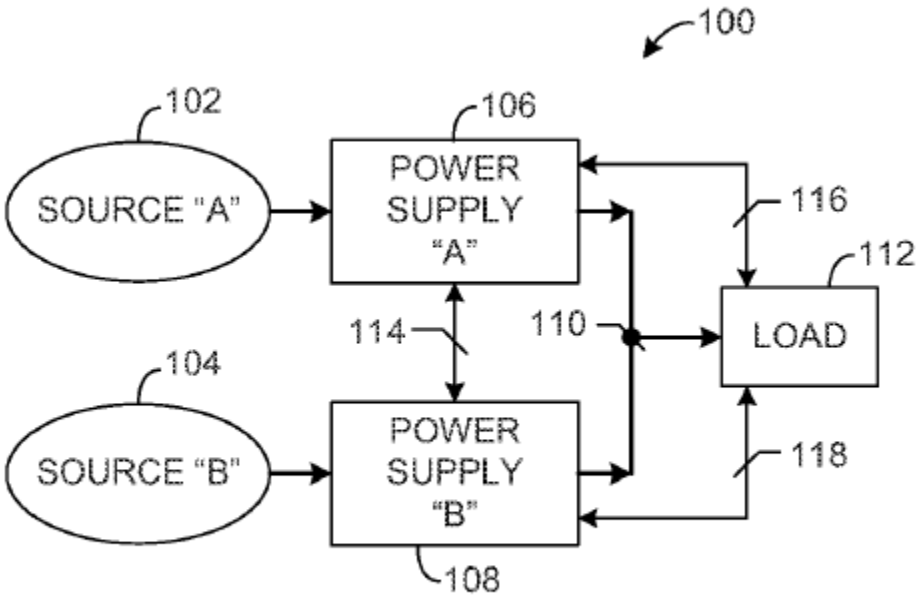

FIG. 1

(EX1001, Fig. 1)(EX1002, ¶24). In Fig. 1, two "independent power sources" 102 and 104 supply power to a respective power supply 106 or 108, which are both coupled to load 112. (EX1001, 2:15-48)(EX1002, ¶24).

In operation, if an "anomalous condition" occurs at power source A, the power supply 106 detects it and sends out an "alert signal". (EX1001, 3:30-36, 2:18-61)(EX1002, ¶25). In turn, the *second power supply* receives an "activation signal", which can be "defined by the 'alert signal'". (EX1001, claim 3)(EX1002, ¶25). The activation signal causes the second power supply to take over power supply to the load. (*Id.*). An example operation method is purportedly shown in Fig. 2, reproduced here:

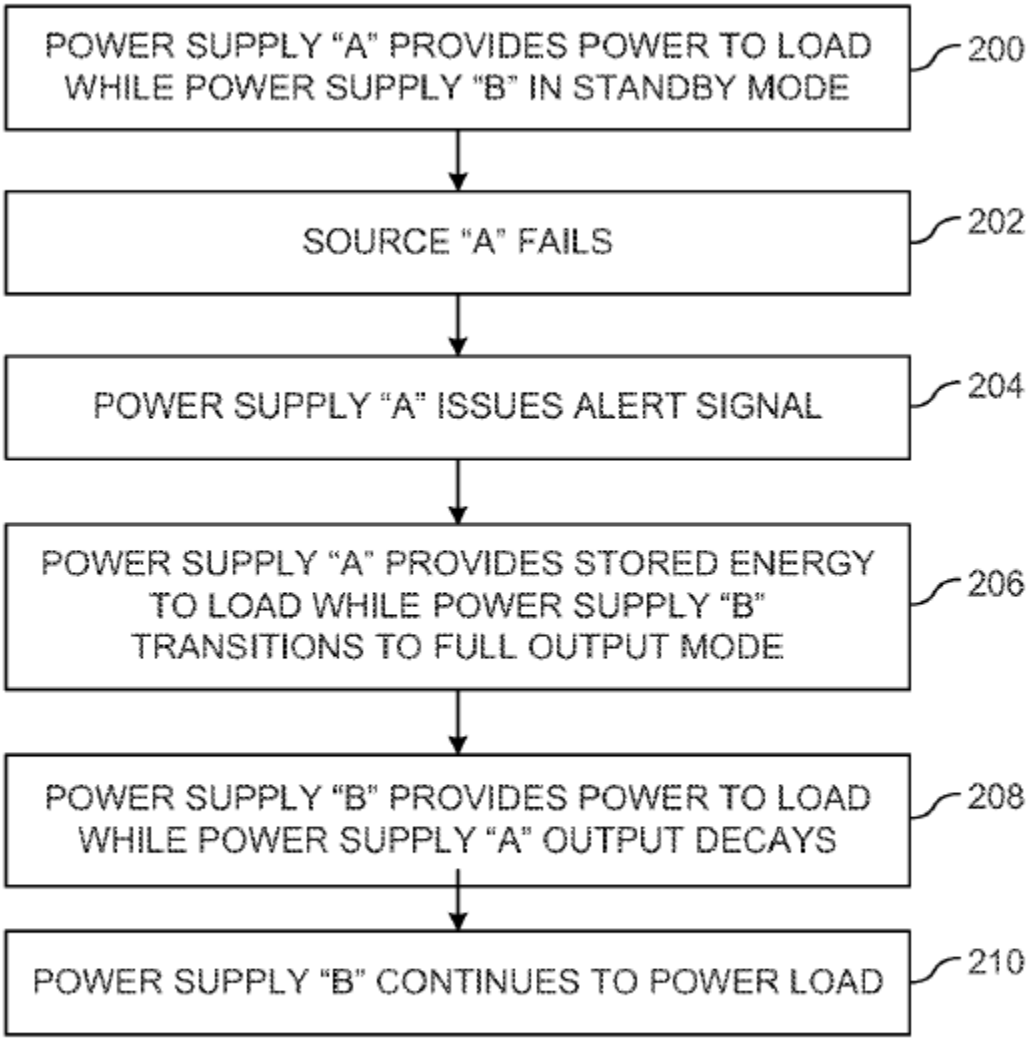

FIG. 2

(EX1001, 3:7-61)(EX1002, ¶25).

B. Prosecution History

The application of the '967 patent, filed on June 25, 2009, was allowed in a first action. (EX1004, pp. 11-17).

II. CLAIM CONSTRUCTION

Petitioner believes that claim construction is unnecessary. In the parties' co-

pending litigation, Patent Owner asserted that in claim 1, the limitation "the *second* power supply configured to transition from a lesser output level to a greater output level", means that the "lesser" and "greater" output levels are compared to the levels of the *first* power supply. (EX1010, p. 17). The Board need not consider this proposal, however, because the prior art cited herein would meet this construction.

Petitioner reserves the right to seek claim constructions and/or indefiniteness in the co-pending litigation.

III. DETAILED EXPLANATION OF THE REASONS FOR UNPATENTABILITY[2]

Ground 1. Claims 1-3, 8, and 14-15 are anticipated by Zak

Claims 1-3, 8, and 14-15 are anticipated by U.S. Pat. No. 5,631,814 ("**Zak**")(EX1005).

Zak issued on May 20, 1997, and is prior art under pre-AIA 35 U.S.C. §102(b). Zak was not of record during prosecution.

A. Overview of Zak

Zak teaches an Uninterruptible Power Supply ("UPS") with two independent sources of power (main AC power and batteries). If main AC power fails, Zak's

---

[2] In the claim mapping sections of the Grounds, the claim text appears in bold-italics, and the mapping follows the claim text. Petitioner has added numbering (e.g. [1b]) to sub-elements of certain claims.

system switches to batteries to supply a load. (EX1005, 7:8-33)(EX1002, ¶¶31-37).

Zak's UPS has several subunits that map to the claimed "first power supply" (shown in blue in Fig. 1 below), "second power supply" (purple), "first independent source of electricity" (AC mains, green, left side), "second independent source of electricity" (batteries, green, right side), and connection to a load (red):

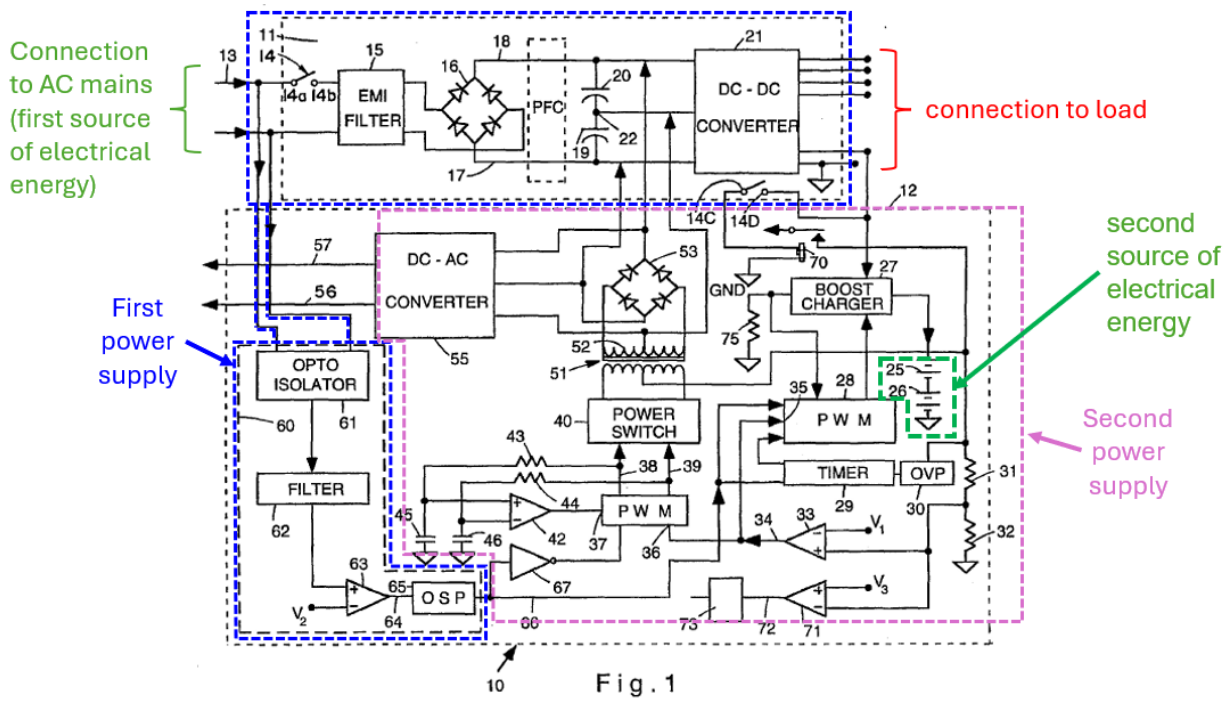

(EX1005, Fig. 1)(EX1002, ¶¶31-37).

B. Claim Mapping

CLAIM 1

"[1a] An apparatus, comprising: a first power supply coupled to an electrical load and a first source of electrical energy,"

Zak teaches an **apparatus** (an uninterruptible power supply ("UPS")) with **a**

first power supply coupled to an electrical load and a first source of electrical energy. (EX1005, Abstract, Fig. 1)(EX1002, ¶¶39-40).

Zak's UPS is shown in Fig. 1, reproduced below with annotations indicating the first power supply (blue), the first source of electrical energy (green), and connection to a load (red).

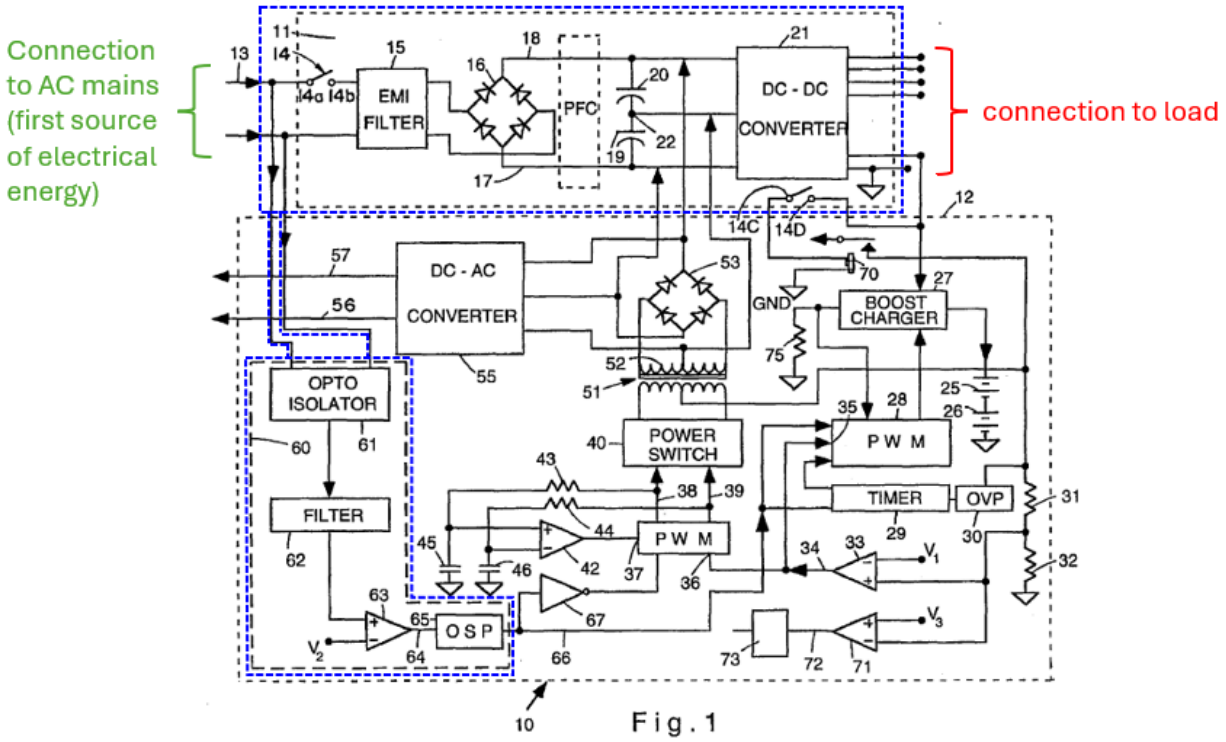

(EX1005, Fig. 1)(Ex. 1002, ¶40).

The **first power supply** is taught by Zak's main power supply 11, detector circuit 60, and the lines connecting them. (EX1005, 4:62-67, 5:66-6:7)(EX1002, ¶40). A "power supply" in the '967 patent "can respectively include any circuitry, processor(s) or other resources as needed in order to perform in accordance with the present teachings", and can include "voltage or current sensing elements,

etc." (EX1001, 2:62-3:6)(EX1002, ¶40). Although Zak refers to different collections of components as "power supplies" (e.g. all of Fig. 1 and boxes 11 and 12 in Fig. 1), the salient question is whether the components identified by Petitioner meet the claimed "first power supply." *Cf. Adasa Inc. v. Avery Dennison Corp.*, 55 F.4th 900, 913 (Fed. Cir. 2022)("[A] prior art inventor need not 'conceive of its invention using the same words as the patentee would later use to claim it.'").

The first power supply is **coupled to**, and energized by, **a first source of electrical energy,** in the form of "a main AC utility power line 13". (EX1005, 4:58-67, Fig. 1)(EX1002, ¶41). The first power supply is also **coupled to an electrical load**. (EX1005, 3:53-56)("an uninterruptible power supply including a main power supply and a backup power supply for supplying at least DC electrical power to a load")(EX1002, ¶41). The load can be components of a computer, and is connected across the output terminals of the DC–DC converter 21 (part of the first power supply). (EX1005, 5:9-18, 1:29-30, 1:14-16, 3:62-63)(EX1002, ¶41).

"[1b] the first power supply configured to issue an alert signal indicative of a failure condition of the first source of electrical energy; and"

The first power supply is **configured to issue an alert signal**, in the form of output signal 66 of overswitch protection circuit (OSP) 65 in detector circuit 60,

which **indicates a failure condition**[3] **of the first source of electrical energy** (main AC 13). (EX1005, 7:8-14, 9:28-42)(EX1002, ¶42). Zak explains:

> "In order to detect the presence or absence of voltage across the main AC power line, there is provided a detector circuit 60 comprising … overswitch protection circuit (OSP) 65 having an output 66…."

(EX1005, 5:66-6:7, *see also* 6:62-7:18, 9:19-42)(*compare* EX1001, 2:51-53)(EX1002, ¶42). The output 66 is an electrical voltage on a line that communicates information, and is thus a **signal**. (EX1002, ¶42).

"[1c] a second power supply coupled to the electrical load and a second source of electrical energy,"

Zak teaches **a second power supply**, shown with an added purple-dashed box

---

[3] Because the outer boundaries of the term "failure condition" are unclear, the term is indefinite, but Petitioner submits that the Board can determine that the absence of power/voltage falls within the concept of "failure condition". (EX1001, 3:25-28). *See Intel Corp. v. Qualcomm Inc.*, 21 F.4th 801, 813 (Fed. Cir. 2021) ("The indefiniteness of a limitation (here, a means-plus-function limitation) precludes a patentability determination only when the indefiniteness renders it logically impossible for the Board to reach such a decision."); *Samsung Elecs. Am., Inc. v. Prisua Eng'g Corp.*, 948 F.3d 1342, 1355 (Fed. Cir. 2020).

in Fig. 1, below, excluding the second source of electrical energy (batteries), which is shown with an added green-dashed box:

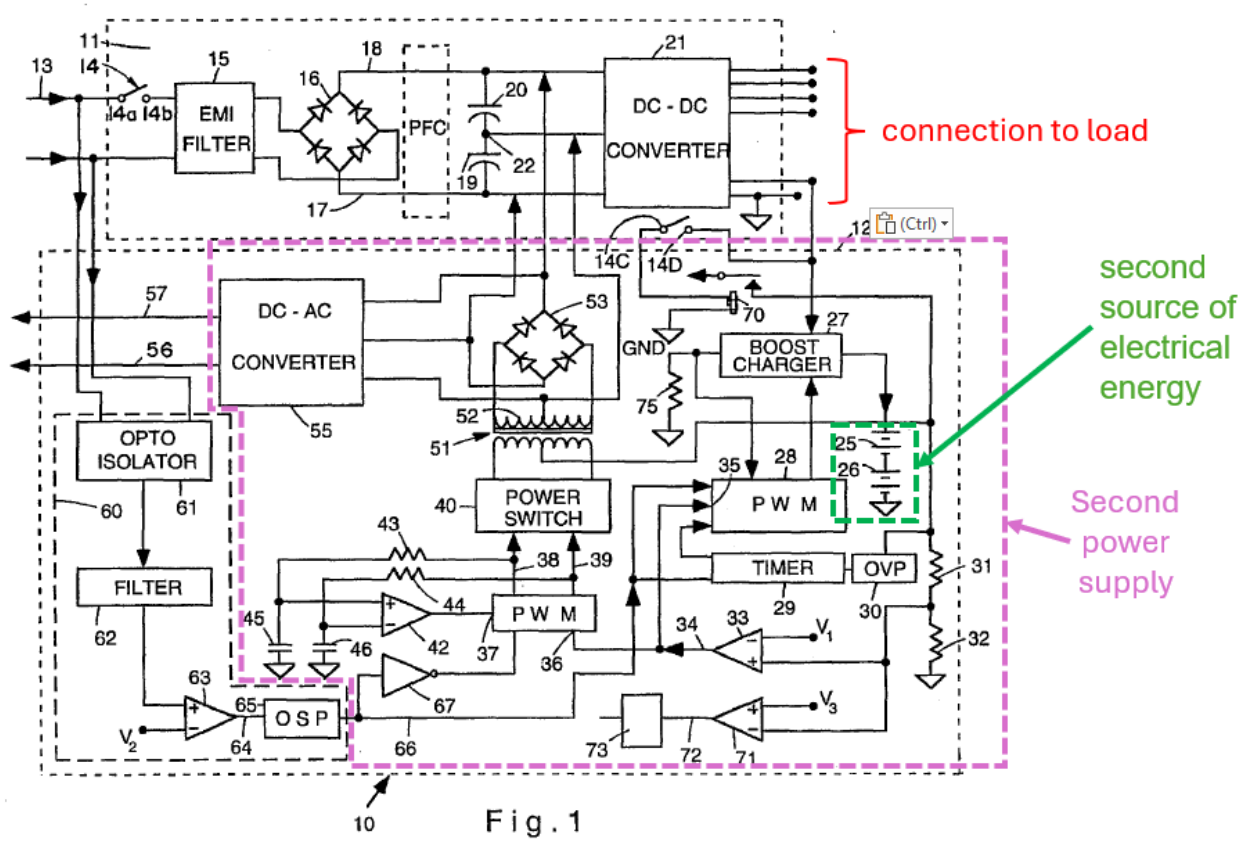

(EX1002, ¶43). The second power supply is **coupled to,** and energized by, **a second source of electrical energy**, namely batteries 25 and 26, indicated in green above. (EX1005, 5:25-50)(EX1002, ¶43). The second power supply is also **coupled to the electrical load**. (EX1005, 3:53-4:26, 5:47-57)(EX1002, ¶43).

> ***"[1d] the second power supply configured to transition from a lesser output level to a greater output level in response to an activation signal."***

The **second power supply is configured to transition from a lesser output**

level to a greater output level in response to an activation signal, which can be either of two signals:

First, Zak's first power supply provides a signal at the output 66 (**activation signal**) of OSP 65, as explained above under element [1b] (EX1005, 5:66-6:7)(*see also* EX1005, 6:62-7:18, 7:8-14, 9:19-42)(*compare* EX1001, 2:51-53)(EX1002, ¶45). Output 66 of Zak is both the **alert signal** (discussed under element [1b]) *and* the claimed **activation signal**.

Second, the **activation signal** reads on Zak's "actuation signal". (EX1002, ¶46). The actuation signal is produced by inverter 67 upon receiving the output 66 of OSP 65 that indicates AC mains failure, and **received** by the PWM 37 in the second power supply (EX1005, 7:8-33, 5:66-6:7)(EX1002, ¶¶46-47). When Zak's actuation signal is active, both the first and second power supplies can simultaneously supply power to the load. (EX1002, ¶48).

Output 66 and the actuation signal each cause the **second power supply** to have the batteries supply power to the load:

> "[I]n the **event of a main AC supply power failure**…**the output of the inverter 67 goes high, providing an actuation signal** via the over-switching protection **circuit 65** so as to enable the PWM 37….**For so long as there is power loss on the main AC power line 13**, **power is supplied to the DC to DC converter 21** in the switch power supply 11 by the power switch 40 **until the batteries 25 and 26 become discharged**…."

(EX1005, 7:8-33)(Emphasis added)(EX1002, ¶47). The output of the DC-DC converter 21 is coupled to the load. (EX1005, Fig. 1, 5:9-17, 3:53-64)(EX1002, ¶47).

The second power supply **transitions from a lesser output level to a greater output level.** (EX1002, ¶48). Specifically, when the AC mains are providing power, the transformer 51 is inactive (zero output). (EX1005, 7:64-8:2)(*compare* EX1001, 1:37-42, 3:18-24, 3:37-43, Fig. 2)(EX1002, ¶48). When output 66 causes the actuation signal, it produces a greater output level from the second (backup) power supply. (EX1005, 7:8-33)(EX1002, ¶48). The claimed transition is thus **in response to** each of these signals, because the output 66 causes the actuation signal, which in turn causes the claimed transition. (EX1005, 7:8-33, 5:66-6:7)(EX1002, ¶49).

CLAIM 2

> ***"2. The apparatus according to claim 1, the first power supply further configured to provide operating power to the electrical load while the second power supply transitions from the lesser output level to the greater output level."***

Zak's first power supply has holdover capacitors 19 and 20 connected parallel to the input of DC–DC converter 21. (EX1005, Fig. 1, 5:4-8, 6:35-44, 7:23-28)(EX1002, ¶50). The term "holdover capacitor" describes a capacitor that maintains operating power temporarily in the event of a failure of the AC mains. (EX1002, ¶50)(*citing* EX1006, ¶0003)(*compare* EX1001, 3:37-48). The holdover

capacitors in Zak's Fig. 1 maintain the input voltage of DC–DC converter 21, and thus also the output voltage and operating power, for some time while Zak's system is switching to battery power. (EX1002, ¶50).

CLAIM 3

> ***"3. The apparatus according to claim 1, the first and second power supplies being coupled such that the activation signal is defined by the alert signal."***

As explained above under claim 1, elements [1b] and [1d], the signal issued on output 66 is both the alert signal and an activation signal, such that the **activation signal is defined by**[4] **the alert signal**. Independently, Zak's actuation signal (the output of inverter 67) is a direct circuit transformation of the output 66, and is thus also an **activation signal** that is **defined by the alert signal**. (EX1005, 7:8-33, 5:66-6:7)(EX1002, ¶51).

CLAIM 8

> ***"8. The apparatus according to claim 1, the first power supply further configured to provide operating level power from internal***

---

[4] Because the outer boundaries of the phrase "activation signal is defined by the alert signal" are unclear, the claim is indefinite, but Petitioner submits that a PHOSITA would have understood, and the Board can determine, that the signals of the prior art in this petition to fall within the scope of the claim. (EX1002, ¶¶51, 93, 113, 193, 196).

energy storage to an electrical load while the second power supply transitions from the lesser output level to the greater output level in response to the activation signal."

See above, discussion under claim 2. The holdover capacitors provide **operating level power** when the AC mains fail and for some time thereafter. (EX1005, Fig. 1, 5:4-8, 6:35-48, 7:23-28)(EX1002, ¶¶52-53). The holdover capacitors are within the first power supply, and are thus **internal energy storage**. (EX1002, ¶52-53).

CLAIM 14

"[14a]. A method, comprising: asserting a signal responsive to an anomalous condition of a first independent source of electrical energy,"

See above, discussion under claim elements [1a] and [1b]. (EX1002, ¶54). The **first independent source of electrical energy** is the AC mains 13, and the **signal** is the output 66 upon failure (**anomalous condition**)[5] of the AC mains. (EX1005, 7:8-33)(*compare* EX1001, 3:25-29 (failure is an anomalous condition))(EX1002, ¶54). The AC mains are an **independent source of electrical**

---

[5] Because the outer boundaries of the term "anomalous condition" are unclear, the term is indefinite, but Petitioner submits that the Board can determine that the absence of power/voltage falls within the concept of "anomalous condition". (*Compare* EX1001, 3:25-29).

energy because they are independent from the batteries. (EX1005, 4:11-16)(EX1002, ¶54).

"[14b] the first independent source of electrical energy coupled to energize a first power supply;"

See above, discussion under claim element [1a]. (EX1002, ¶55).

"[14c] transitioning a second power supply from a standby output level to a normal output level responsive to the signal,"

See above, discussion under claim element [1d]. (EX1002, ¶56). Zak's second power supply has a **standby** output level prior to transitioning because it is outputting no power. (EX1005, 7:64-8:2)(EX1002, ¶56). The transitioning is **responsive to the signal**, because it occurs as a consequence of the assertion of the output signal 66 and Zak's actuation signal, *see* claim element [1d]. (EX1002, ¶56).

"[14d] the second power supply energized by a second independent source of electrical energy; and"

See above, discussion under claim element [1c]. (EX1002, ¶57). Zak's batteries are an **independent source of electrical energy** for the reasons discussed under element [14a]. (EX1005, 4:11-16)(EX1002, ¶57).

"[14e] providing operating power from the first power supply to an electrical load during the transitioning."

See above, discussion under claim 2. (EX1002, ¶58).

CLAIM 15

"15. The method according to claim 14 further comprising communicating the signal from the first power supply to the second power supply, the second power supply providing operating power to the electrical load after the transitioning to normal output level."

The **signal** (output 66**) is communicated from the first power supply to the second power supply**. (EX1002, ¶59). Zak's second power supply **provides operating power to the electrical load after the transitioning to normal output level**. (EX1005, 7:18-33)(EX1002, ¶60).

Ground 2. Claims 1-7 and 9-15 are obvious over Susong

Claims 1-7 and 9-15 are obvious under pre-AIA 35 U.S.C. §103 over U.S. Pat. App. No. US 2009/0243391 ("**Susong**")(EX1007).

Susong was filed on March 31, 2008, making it prior art under pre-AIA 35 U.S.C. §102(e)(1). Susong was not of record during prosecution.

A. Overview of Susong

Susong teaches a "multi-functional power supply" that is "advantageously suitable for distributed networking environments", as shown in Fig. 1:

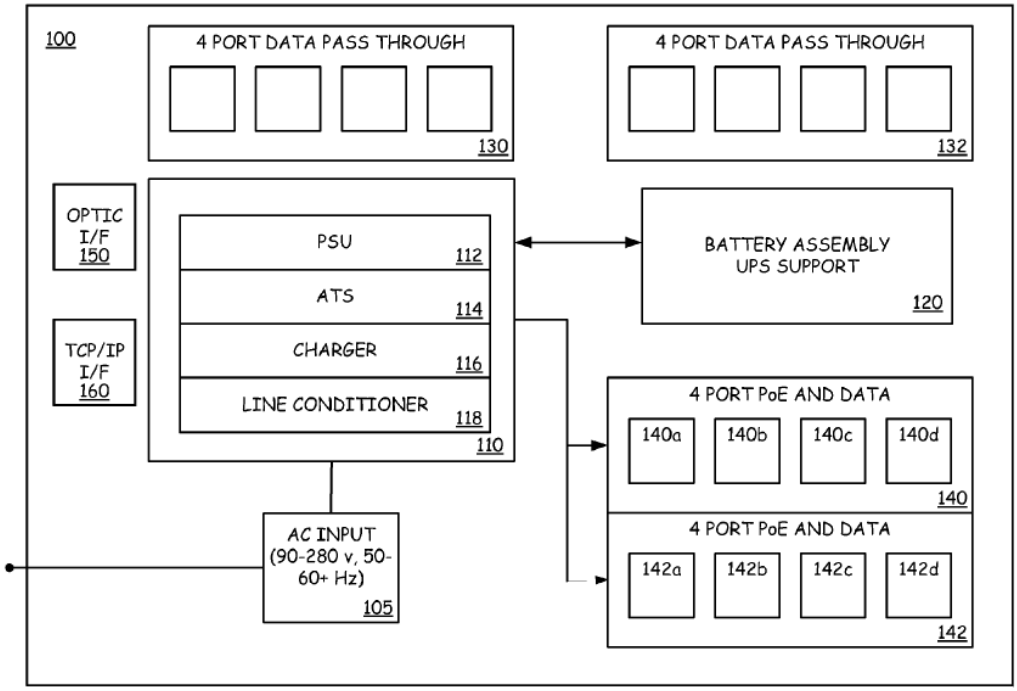

FIG. 1

(EX1007, Fig. 1, ¶¶0028-0037)(EX1002, ¶62).

The power supply 100 receives AC power at interface 105 (lower left), which provides power to power supply module 110 to condition the power using power supply unit 112. (EX1007, ¶¶0028-0030)(EX1002, ¶63). The power supply unit 112 provides DC power to ports 140 and 142 to supply loads. (EX1007, ¶0035)(EX1002, ¶63). The power supply 100 has an associated battery assembly 120 (right side) with batteries. (EX1007, ¶¶0033-0035)(EX1002, ¶63).

Susong also teaches a system with a redundant configuration of power supplies in Fig. 2:

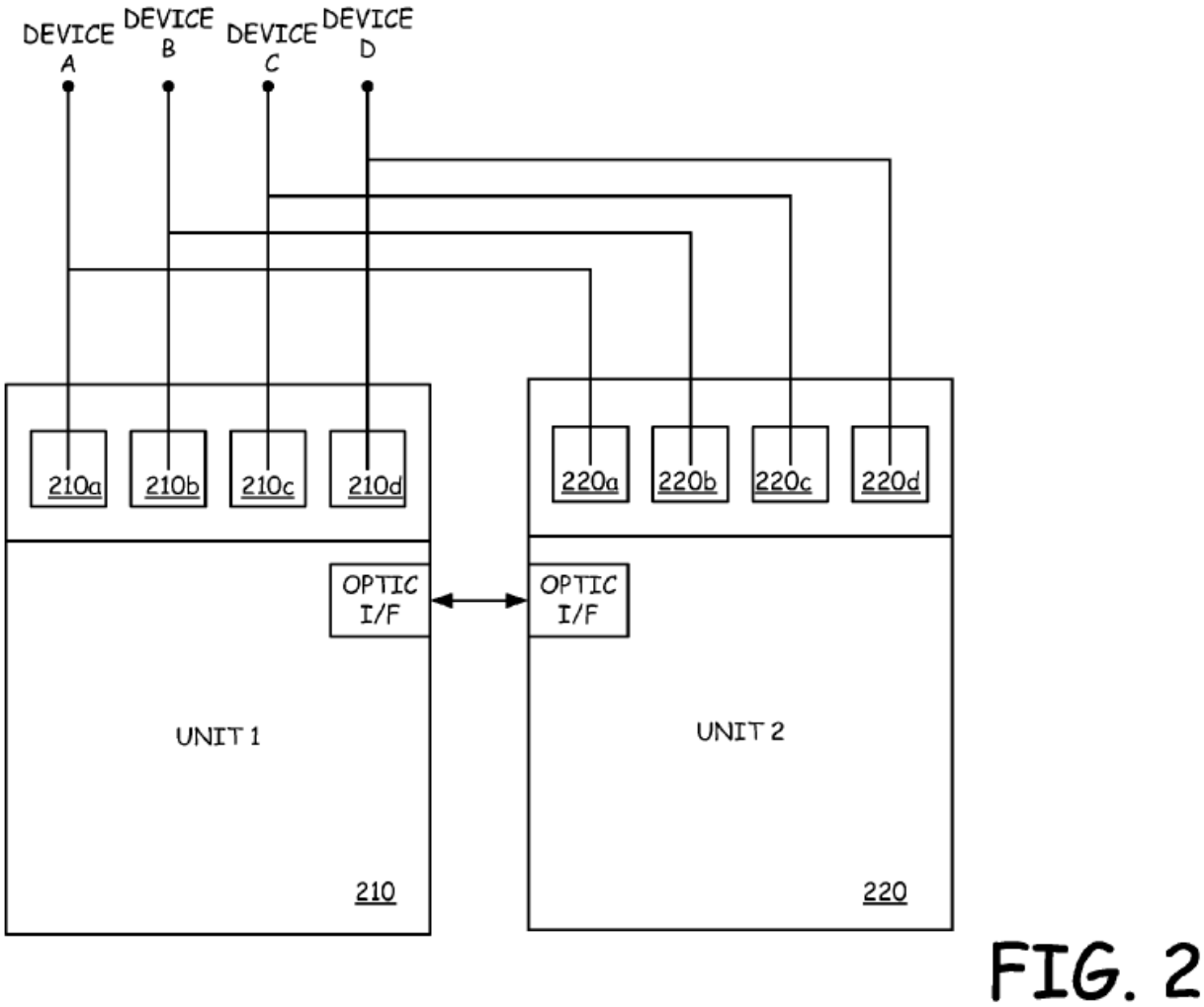

(EX1007, Fig. 2, ¶¶0037-0038)(EX1002, ¶64).

In Fig. 2, the power supplies 210 and 220 (UNIT 1 and UNIT 2) communicate to achieve "failover" operation, wherein the active power supply detects an anomaly in its own operation, and signals to the other supply that it should take over. (EX1007, ¶¶0038, 0041-0047, 0019-0020, Figs. 4A, 4B)(EX1002, ¶65). The transfer of responsibility for powering a load from one power supply to another can be triggered by detecting a failure in the batteries. (EX1007, ¶¶0037-0038, 0042,

0020, 0041-0047, Figs. 4A-4B)(EX1002, ¶¶65-66). When a failure of the batteries is detected, the AC power can be active, or may already have failed to both power supplies. (EX1007, ¶¶0033-0034, 0019)(EX1002, ¶¶65-66).

B. Overview of the Obviousness Contention

Susong anticipates numerous claims. This Ground is nonetheless presented as one of single-reference obviousness for two reasons.

First, to the extent there is any argument that Susong does not expressly state that its power supply of Fig. 1 is used in conjunction with the remaining disclosure (*e.g.* Fig. 2), it would have been obvious to do so.

Second, the independent claims generally require a power supply "coupled to" a power source. The power sources in this Ground are the batteries associated with each of Susong's power supplies. The batteries can be modular and are replaceable. To the extent the claim language requires that the thing "coupled to" the power supply must be somehow physically distinct from the power supply, it would have been obvious to make the batteries separable and replaceable.

C. Rationale (Motivation)

It would have been obvious to use the device of Fig. 1 of Susong as the UPSs (*e.g.* UNIT 1 and UNIT 2 in Figs. 2-3) with respect to the rest of Susong's disclosure (should Patent Owner argue it is not taught by Susong expressly). (EX1002, ¶70). Before describing Fig. 1, Susong states that "[t]he present invention is directed

towards a **universal power supply** that is ideally suitable in a distributed network design with limited access to power sources." (EX1007, ¶0019)(Emphasis added)(EX1002, ¶70). The power supply of Fig. 1 is "functional block diagram illustrating various components of functions incorporated into **an exemplary embodiment of the present invention**." (EX1007, ¶0028)(Emphasis added)(EX1002, ¶70). The power supply 100 of Fig. 1 is also expressly tied to Figs. 4A and 4B. (EX1007, ¶0041)(EX1002, ¶70). With respect to Fig. 2 and 3, it is obvious that Susong is using power supplies 100 as UNIT 1 and UNIT 2 (elements 210, 220, 310, and 320). Immediately prior to describing Fig. 2, Susong states "[a]nother aspect of the present invention that can be incorporated into various embodiments is the failover functionality", and then references the operation of the battery assembly "as previously described", before describing the failover functionality with respect to Figs. 2 and 3. (EX1007, ¶¶0037-0039)(EX1002, ¶70). The power supplies shown in Fig. 2 and Fig. 3, moreover, are clearly intended to encompass the power supplies of Fig. 1, because they have PoE ports and an optical communications interface ("Optic I/F") for failover communications (just like Fig. 1). (EX1007, Figs. 1-3, ¶¶0030, 0038, 0049, 0020)(EX1002, ¶70). Given these disclosures of Susong, it would have been obvious to use the power supply 100 of Fig. 1 for each of the units in Figs. 2-3, 4A, and 4B. (EX1002, ¶70).

It further would have been obvious to have the battery assembly and/or

batteries be separable, modular components. First, Susong generally states that components of Fig. 1 do not need to be physically part of power supply 100. (EX1007 ¶0030, *see also* ¶¶0054-0055, 0019). Susong further teaches that new batteries can be installed. (EX1007, ¶0051)(describing an alert "notifying the system 100 that a new battery has been installed")(EX1002, ¶71). Based on these disclosures, a PHOSITA would have been motivated to make the batteries a separable modular component from the first power supply so that they can be easily replaced, much as many battery-operated appliances in the relevant timeframe allowed batteries to be installed and easily replaced. (EX1002, ¶71).

D. Reasonable Expectation of Success

A PHOSITA in the relevant timeframe would have had a reasonable expectation of success using Susong's teachings as set forth in the manner proposed in the present Ground, and to achieve the benefits described above. (EX1002, ¶72). The art in the relevant timeframe was predictable; the basic components that made up power-supplies had been well-known in the art. (EX1002, ¶72). In particular, the '967 patent's general and high-level disclosures support this understanding of the relevant art. *See In re Epstein*, 32 F.3d 1559, 1568 (Fed. Cir. 2004).

E. Graham Factors

The **level of ordinary skill** in the art was equal to a bachelor's degree in electrical engineering or a similar field and two years of related professional

experience, where additional education can substitute for experience or vice versa. (EX1002, ¶73).

The **scope and content of the prior art** are discussed throughout the Ground.

The **differences between the prior art and the claims** are discussed throughout the Ground.

Petitioner is not aware of any **secondary considerations** that would make an inference of non-obviousness more likely.

This discussion of *Graham* factors applies to all Grounds.

F. Analogous Art

Susong is analogous art because it is in the same field as the '967 patent ("the electrical arts", EX1001, 3:2-3, 3:44-48), and specifically is related to power supplies. (EX1007, Title, Abstract). Susong is also reasonably pertinent to a problem facing the named inventors. (EX1001, 1:32-33)(EX1007, ¶¶0033-0037, Figs. 2-4)(EX1002, ¶78). *See Wyers v. Master Lock Co.*, 616 F.3d 1231, 1238 (Fed. Cir. 2010)("The Supreme Court's decision in *KSR* [cite omitted], directs us to construe the scope of analogous art broadly….").

G. Claim Mapping

CLAIM 1

"[1a] An apparatus, comprising: a first power supply coupled to an electrical load and a first source of electrical energy,"

Susong teaches this element. The overall arrangement of Susong is shown in

Fig. 2, reproduced here:

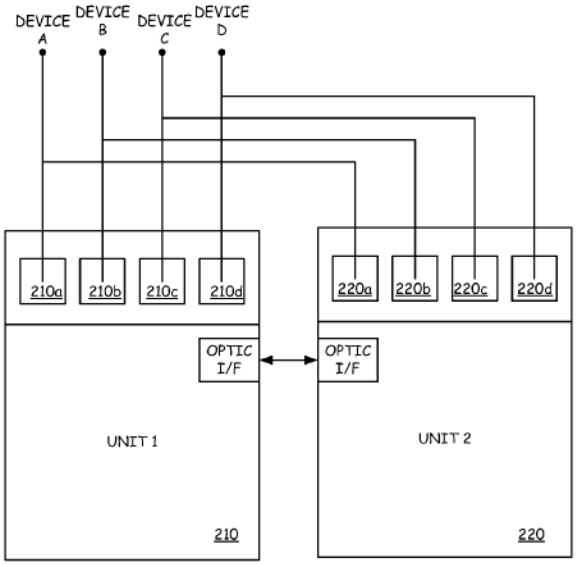

FIG. 2

(EX1007, Fig. 2)(EX1002, ¶79). In Fig. 2, the **first power supply** is unit 210 (also labeled UNIT 1). (EX1007, ¶0038)(EX1002, ¶79). The first power supply is **coupled to an electrical load**, which can be any of devices A – D. (EX1007, ¶¶0038, 0004, 0019-0020, 0026, 0034, claim 3)(EX1002, ¶79).

Regarding the first power supply being **coupled to a first source of electrical energy**, this is rendered obvious by Susong. Specifically, it would have been obvious—*see* pages 24-25, above—that the units 210 and 220 shown in Fig. 2 are examples of the power supply 100 shown in Fig. 1 of Susong. (EX1002, ¶80). Figure 1 of Susong is reproduced here:

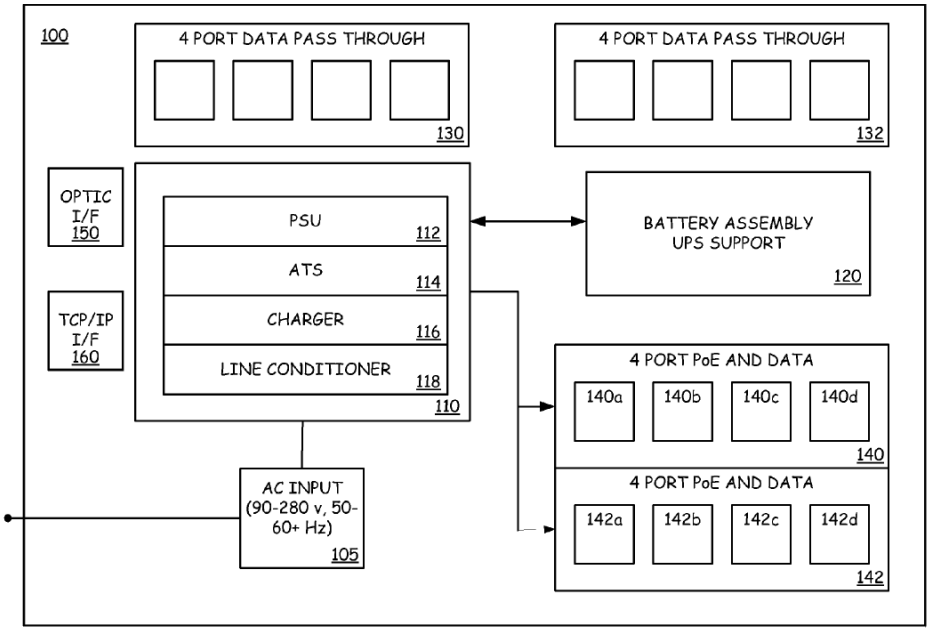

FIG. 1

(EX1007, Fig. 1)(EX1002, ¶80). As shown in Fig. 1, each unit 100 has a power supply module 110, coupled to battery assembly 120, which contains batteries. (EX1007, ¶¶0033, 0028-0030)(EX1002, ¶80). The batteries are a **first source of electrical energy**, to which the first power supply is **coupled**. (EX1007, ¶¶0033, 0028-0030)(EX1002, ¶80).

To the extent the claim phrase "coupled to" requires the **first source of electrical energy** to be physically distinct from the **first power supply**, it would have been obvious to provide modular batteries that could be removed, and were thus not part of the first power supply, for the reasons discussed on pages 25-26, above. (EX1002, ¶81).

"[1b] the first power supply configured to issue an alert signal

indicative of a failure condition of the first source of electrical energy; and"

Susong's **first power supply** is **configured to issue an alert signal indicative of a failure condition of the first source of electrical energy**. Specifically, each power supply (including first power supply 210) tests its own battery. (EX1007, ¶0020)("The power supply module is further able to test the chargeable battery to ensure that it can handle a load")(*see also* ¶¶0033, 0040-0041, 0043, claims 1, 20)(EX1002, ¶82). Then, "[i]f the battery assembly is not operating in accordance with the required standard" (EX1007, ¶0042) (which in Susong can simply be a "failure", *e.g.*, ¶0020, claims 3, 16, 20), the power supply will poll other power supplies to determine if their battery assemblies are working properly. (EX1007, ¶0044)(EX1002, ¶82). If another power supply responds that it is ready, then the first power supply will issue a surrender request. (EX1007, ¶¶0044-0045)("The surrender request basically informs the partner unit that the active unit needs to relinquish control and pass control to the partner.")(EX1002, ¶82).

Upon receipt of a surrender request, the second power supply will issue a shutdown command to the first power supply. (EX1007, ¶0045)(EX1002, ¶83). Upon shutdown, the first power supply will send a shutdown confirmation to the second power supply, at which point the second power supply becomes the active power supply, providing power to the loads. (EX1007, ¶¶0046-0047)(EX1002, ¶83).

Susong thus teaches that the **first power supply**, when it detects that a battery

(**first source of electrical energy)** is not operating in accordance with the required standard, will issue a surrender request and then a shutdown confirmation, either of which qualifies as **an alert signal indicative of a failure condition of the first source of electrical energy.** (EX1002, ¶84). The surrender request and shutdown confirmation each **indicate a failure condition** because they are both signals that result from detection of a failure condition of the battery. (EX1007, ¶¶0045-0047, Figs. 4A, 4B)(EX1002, ¶84). The surrender request and shutdown confirmation are each a "**signal**" because they are communicated by the optical or electrical communications interfaces of the power supplies. (EX1007, ¶0049)(EX1002, ¶84).

"[1c] a second power supply coupled to the electrical load and a second source of electrical energy,"

Susong teaches **a second power supply** (Fig. 2, 220) coupled to the **electrical load** (any of devices A-D) and a **second source of electrical energy** (respective batteries). Because unit 220 is connected in parallel and simultaneously with unit 210 to devices a-d, and is an example of a power supply of Fig. 1 of Susong, as explained on pages 24-25, above, the discussion under element [1a] applies similarly to unit 220 as the second power supply. (Ex. 1002, ¶85).

"[1d] the second power supply configured to transition from a lesser output level to a greater output level in response to an activation signal."

Susong teaches that **in response to** either the surrender request and/or shutdown confirmation (either of which can be the **activation signal**), the **second power supply** (unit 220) **is configured to transition from a lesser output level to a greater output level**. (EX1007, ¶¶0038, 0043-0047, Figs. 4A, 4B)(EX1002, ¶86).

Specifically, at the time a surrender request is sent from the first power supply to the second power supply, the first power supply is supplying power to the loads, and the second power supply is not. (EX1007, ¶0038)(EX1002, ¶87). Thus, the second power supply **transitions from a lower level** (no output power) **to a greater level** (full operating power). (EX1007, ¶¶0038, 0047)(EX1002, ¶87).

The transitioning **is in response** to the surrender request or shutdown confirmation (either of which can be the **activation signal**) because these signals occur in a chain of events to effect the transition to the second power supply. (EX1007, ¶¶0045-0047, Figs. 4A, 4B)(EX1002, ¶¶88-89).

CLAIM 2

"2. The apparatus according to claim 1, the first power supply further configured to provide operating power to the electrical load while the second power supply transitions from the lesser output level to the greater output level."

Susong teaches and renders obvious claim 2.

In Figures 4A-4B the active unit sends a surrender request to the take-over unit (step 410), the take-over unit receives the surrender request and responds with a shutdown command "indicat[ing] that the [take-over] unit is ready and able to

become the active unit" (steps 458-460) and the active unit receives the shutdown command and shuts down (steps 412-414). (EX1007, ¶¶0044-0047). This teaches that the active unit is providing power until it shuts down (step 414), including while the take-over unit is receiving the surrender request (**activation signal**) and in response readying itself to become the active unit (steps 458-460). (EX1007, ¶¶0045-0046)(EX1002, ¶¶90-92). It further would have been obvious to implement Susong so that the active unit provides power while the take-over unit transitions to a greater output level in response to the activation signal (surrender request and/or shutdown command). A PHOSITA would have understood that the take-over unit would not transition instantaneously, and that interruptions in operating power were undesirable. (EX1002, ¶¶90-92)(*see* EX1007, ¶¶0042-0047, Figs. 4A-4B, ¶¶0004, 0033 (explaining that battery assembly 120 in power supply 100 "provide[s], at a minimum, sufficient power source to allow for an orderly shutdown of the system in the event of a loss of primary power")).

CLAIM 3

> ***"3. The apparatus according to claim 1, the first and second power supplies being coupled such that the activation signal is defined by the alert signal."***

Susong teaches claim 3. Because the first power supply is transmitting signals directly to the second power supply, any signal sent from the first power supply (*e.g.* an **alert signal**) is the same as a signal received by the second power supply (*e.g.* an

activation signal). (EX1007, ¶¶0044-0047)(EX1002, ¶93). Thus, whether it is the surrender request or the shutdown notification, **the activation signal is defined by the alert signal**. (EX1002, ¶93). Furthermore, if the surrender request is the alert signal and the shutdown confirmation is the activation signal (see discussion above under element [1d]), then the shutdown confirmation is **defined by** the surrender request, because the surrender request is a necessary pre-condition for the shutdown confirmation, and sets the parameters for the shutdown confirmation (*e.g.* which unit will confirm shutdown). (EX1007, ¶¶0044-0047, Figs. 4A and 4B, reference numerals 410, 458-462)(EX1002, ¶93).

CLAIM 4

> ***"4. The apparatus according to claim 1, the electrical load being configured to provide the activation signal to the second power supply in response to the alert signal from the first power supply."***

Susong renders claim 4 obvious. Susong teaches that the intelligence controlling its power supplies can be incorporated into other devices external to the power supplies. (EX1007, ¶¶0050-0052, claims 6-7)(EX1002, ¶94). Susong states, for example, that:

> "In other embodiments, the intelligence may reside in an external program that can send commands to the system 100. The power supply module 110 can receive the commands, interpret the command and then respond accordingly."

(EX1007, ¶0050)(EX1002, ¶94).

Because the second power supply can, per Susong's express teaching, "receive the commands" from an external program, and then "interpret the command and then respond accordingly", it would have been obvious for an external device running such a program to serve as a hub for communications between power supplies (where the power supplies send and receive the messages discussed in ¶¶0041-0047, Fig. 4A-4B) and to provide the controlling intelligence, by receiving an alert signal from the first power supply and **providing** an **activation signal to the second power supply** when appropriate. (EX1007, ¶0050)(EX1002, ¶95).

Furthermore, it would have been obvious for that external device to be a **load device**. (EX1002, ¶96). Susong teaches that the external device can communicate with the power supplies over TCP/IP, and Susong teaches that its load devices are devices that use Ethernet data connections (and TCP/IP over Ethernet), such as network access points like wireless access points. (EX1007, ¶¶0010, 0005-0006, 0050-0051)(EX1002, ¶96). Also, Susong expressly teaches that aspects of its power supplies can be incorporated into such devices. (EX1007, ¶0035)(EX1002, ¶96).

A PHOSITA would have been motivated to adopt this arrangement, to allow for the flexibility of network devices to manage their own power supplies. (EX1002, ¶¶97-98). By building the guiding intelligence for the power supplies into the network devices themselves, the manufacturers of these devices, who have a superior understanding of the power requirements of the devices (such as the ability

to tolerate short outages), can better provide for the overall power management. (EX1002, ¶¶97-98).

CLAIM 5

"5. The apparatus according to claim 1, the first power supply further configured to transition from a lesser output level to a greater output level in response to a signal indicative of an anomaly in the second source of electrical energy."

As discussed on pages 24-25, above, it was obvious that the second power supply 220 is of the same type as the first power supply (namely power supply 100 of Fig. 1). (EX1002, ¶99). The operation of the two power supplies is identical and the communication is reciprocal, such that the description under claim 1 of the configuration and operation of the first power supply applies equally to the second power supply. (EX1007, ¶¶0041-0048, Figs. 4A, 4B)(EX1002, ¶99). Thus, when the second power supply is active, it tests its own battery (the **second source of electrical energy**). (EX1007, ¶¶0040-0041, 0033, 0020). If the test indicates an abnormal operation (EX1007, ¶0042), the second power supply is configured to issue **signals indicative of an anomaly** (the surrender request and the shutdown confirmation, either of which meets the **signal**) **in the second source of electrical energy** (the batteries of the second power supply) that **cause the first power supply to transition from a lesser output level to a greater output level.** (EX1007, ¶¶0041-0048, 0038, Figs. 4A, 4B)(EX1002, ¶99).

CLAIM 6

"[6a]. The apparatus according to claim 1, at least the first or second power supply configured to operate at a lesser output level in response to a standby signal,"

Susong teaches that when the active power supply issues a surrender request, its partner power supply will issue a shutdown command (**standby signal**), which causes the active power supply to shut down **(operate at a lesser output level in response to the standby signal**). (EX1007, ¶¶0045-0046)(EX1002, ¶100).

As discussed above under claim 5, the power supplies are identical. Either the **first or second power supply** can be the active power supply (actively supplying power to the loads), while the respective other power supply is not active (not supplying power to the loads). (EX1007, ¶¶0041-0048, Figs. 4A, 4B)(EX1002, ¶101). This means that both power supplies can receive a shut down command (standby signal), and both are **configured to operate at a lesser output level in response to a standby signal**. (EX1002, ¶101).

"[6b] the first power supply further configured to transition from the lesser output level to a greater output level in response to a respective activation signal."

As explained above under claim 1, element [1d], Susong power supplies are **configured to transition from the lesser output level to a greater output level in response to a respective activation signal**. This applies to both the first power

supply and the second power supply when the respective power supply is transitioning from inactive to active status. (EX1007, ¶¶0041-0048, Figs. 4A, 4B)(EX1002, ¶102).

CLAIM 7

"7. The apparatus according to claim 1 further comprising a third power supply configured to transition from a lesser output level to a greater output level in response to an activation signal."

Susong teaches that the embodiment of Fig. 2 may have more than two units. (EX1007, ¶0038)("it will be appreciated that more units may also be employed.")(EX1002, ¶103). If more than two units are employed, that means there will obviously be at least a third identical unit (**third power supply**), connected in the same manner as the first two units. (EX1002, ¶103). Because the third power supply is obviously an example of power supply 100 of Fig. 1, as discussed above on pp. 24-26, the third power supply is configured in an identical manner to the first and second power supplies, and thus is **configured to transition from a lesser output level to a greater output level in response to an activation signal**, as explained under claim 1, element [1d]. (EX1007, ¶¶0041-0048, Figs. 4A-4B)(EX1002, ¶103).

CLAIM 9

"[9a]. A system, comprising: an electrical load;"

See discussion above under claim 1, element [1a]. Fig. 2 of Susong shows a

system with an electrical **load**. (EX1007, Fig. 2, ¶0038)(EX1002, ¶104).

"[9b] a first power supply coupled to a first independent source of electricity and to the electrical load,"

See discussion above under claim 1, element [1a]. "Electricity" as discussed there *is* **electrical energy** as claimed here. (EX1002, ¶105).

The first source of electrical energy is **independent**, because the batteries coupled to the first power supply are **independent** from the batteries coupled to the second power supply. (EX1007, ¶¶0038, 0020, 0041-0048, Figs. 4A-4B)(EX1002, ¶105).

"[9c] the first power supply configured to provide a first alert signal indicative of an anomalous condition of the first independent source of electricity; and"

See discussion above under claim 1, element [1b]. Claim 1 requires a "failure condition", whereas the present element requires "an anomalous condition". The condition of the batteries that triggers a first alert signal is an **anomalous** condition, because a failure condition qualifies as an anomalous condition (*compare* EX1001, 3:25-29), and because the alert signal occurs "[i]f the battery assembly is not operating in accordance with the required standard", which can include total failure. (EX1007, ¶0042, 0020, claims 3, 16, 20)(EX1002, ¶106).

"[9d] a second power supply coupled to a second independent source

of electricity and to the electrical load,"

See discussion above under claim 1, element [1c]. The second source of electrical energy is **independent** for the same reasons discussed above under claim element [9b] for the first independent source of electricity. (EX1002, ¶107).

"[9e] the second power supply configured to provide a second alert signal indicative of an anomalous condition of the second independent source of electricity,"

This element is similar to element [9c], except that it applies to the second power supply. The reasoning under element [9c] is applicable here, because the second power supply is identical to the first and is configured in the same manner, as discussed above under claim 5 and on pages 24-25. (Ex. 1002, ¶108).

"[9f] the first power supply further configured to transition from a lesser output level to a greater output level in response to a first activation signal,"

See discussion above under claim 1, element [1d] and claim 5, and pages 24-25, above. Although the discussion under claim 1, element [1d] relates to the *second* power supply, the first power supply is an identical unit, and are both configured in the same manner. (EX1002, ¶109). Here, the **first activation signal** is a surrender request or shutdown confirmation from the second power supply. (EX1007, ¶¶0044-0047)(EX1002, ¶109).

"[9g] the second power supply further configured to transition from a lesser output level to a greater output level in response to a second activation signal."

See discussion above under claim 1, element [1d]. Here, the **second activation signal** is a surrender request or shutdown confirmation from the first power supply. (EX1007, ¶¶0044-0047)(EX1002, ¶110).

CLAIM 10

"10. The system according to claim 9, at least the first or second power supply further configured to operate at a lesser output level in response to a standby signal."

See claim 6[a]. The discussion there applies to both power supplies because they are identical and configured in the same manner, as discussed above under claim 5 and on pages 24-25. (EX1002, ¶111).

CLAIM 11

"11. The system according to claim 9, the first and second power supplies respectively configured to provide operating level power to the electrical load for an amount of time sufficient for the other of the first and second power supplies to transition from the lesser output level to the greater output level."

See claim 2. The discussion there applies equally to both the first and second power supplies, as discussed above under claim 5 and on pages 24-25. (EX1002, ¶112).

CLAIM 12

"12. The system according to claim 9, the second activation signal

defined by the first alert signal, the first activation signal defined by the second alert signal."

See claim 3. The discussion there applies equally to both the first and second power supplies, as discussed above under claim 5 and on pages 24-25. (EX1002, ¶113).

CLAIM 13

"13. The system according to claim 9, the electrical load configured to provide the second activation signal in response to the first alert signal, the electrical load further configured to provide the first activation signal in response to the second alert signal."

See claim 4. Claim 13 adds that the electrical load is **further configured to provide the first activation signal in response to the second alert signal**. Because the operation of the power supplies is identical (*see* claim 5 and pages 24-25), the discussion under claim 4 applies equally to the first activation signal and second alert signal when coordinated by a load device. (EX1002, ¶114).

CLAIM 14

"[14a]. A method, comprising: asserting a signal responsive to an anomalous condition of a first independent source of electrical energy,"

See discussion under elements [1a] and [1b]. *See* discussion of element [9b] for an explanation of why the first power supply's battery is an "independent" source of energy, and *see* discussion of element [9c] for an explanation of why a "failure condition" qualifies as an "anomalous condition." The **signal** is **responsive to** the

anomalous condition, as shown in Susong's Figs. 4A and 4B. (EX1007, ¶¶0037-0038, 0041-0047, Figs. 4A-4B)(EX1002, ¶115).

"[14b] the first independent source of electrical energy coupled to energize a first power supply;"

See discussion under element [1a]. The battery assembly 120 and/or associated batteries are **coupled to energize a first power supply** because they provide power when there is an AC power outage. (EX1007, ¶0034)(EX1002, ¶116).

"[14c] transitioning a second power supply from a standby output level to a normal output level responsive to the signal,"

See discussion under element [1d] and claim 3. When an anomalous condition is detected in the batteries of Susong's first power supply, it will cause a second power supply to take over. The second power supply is **transitioning … from a standby output level to a normal output level responsive to the signal**, because before the transition it is "offline", while after it is providing power to the loads. (EX1007, ¶0038)(EX1002, ¶117).

"[14d] the second power supply energized by a second independent source of electrical energy; and"

See discussion under element [1c]. *See* discussion of elements [9b] and [9d] for an explanation of why the second power supply's battery is an "independent"

source of energy. The batteries are coupled to energize a second power supply because they provide power when there is an AC power outage. (EX1007, ¶0034)(EX1002, ¶118).

"[14e] providing operating power from the first power supply to an electrical load during the transitioning."

See discussion under claim 2. (EX1002, ¶119).

CLAIM 15

"15. The method according to claim 14 further comprising communicating the signal from the first power supply to the second power supply, the second power supply providing operating power to the electrical load after the transitioning to normal output level."

Susong teaches claim 15**.** As discussed under element [1b], a Susong power supply provides both a surrender request and a shutdown confirmation, either one of which can be the claimed **signal**. (EX1002, ¶120). The **signals** are **communicated** by the optical or electrical communications interfaces of the power supplies directly to the respective other power supplies. (EX1007, ¶¶0049, 0038, 0044-0047)(EX1002, ¶120). When the second power supply is in receipt of these signals from the first power supply, it provides **operating power to the electrical load after the transitioning to normal output level**. (EX1007, ¶0047)(EX1002, ¶120).

Ground 3. Claims 2, 8, 11, and 14-15 are obvious over Susong and Zak

Claims 2, 8, 11, and 14-15 would have been obvious under pre-AIA 35 U.S.C.

§103 over **Susong** (discussed in Ground 2) and **Zak** (discussed in Ground 1).

A. Overview of the Obviousness Contention

Each of dependent claims 2, 8, 11, and independent claim 14 recites limitations requiring one power supply to temporarily provide power during a transition period of another power supply from a lower to a greater output level. Claim 15 is dependent from claim 14 but does not itself contain such a limitation.

To the extent Susong does not expressly address providing power during a transition period of another power supply, this concept would have been obvious in further view of Zak. (EX1002, ¶122). As discussed under Ground 1, Zak teaches holdover capacitors connected in parallel to the DC-DC converter 21 to provide power at a DC voltage for a period of time. (EX1005, Fig. 1, 5:4-8, 6:35-44, 7:23-28)(EX1002, ¶122). It would have been obvious to include holdover capacitance (*e.g.* parallel to the output of PSU 112) in Susong's power supplies to temporarily provide power during transitions between power supplies in the event of a battery failure, when the batteries would not be expected to provide backup power. (EX1002, ¶¶122-124).

B. Rationale (Motivation)

The use of holdover capacitance in Susong's power supplies would have been obvious. First, both Susong and Zak state the need to provide uninterrupted power to load devices, providing a motivation to limit the interruption of power to the extent

possible. (EX1007, ¶¶0016, 0004, 0033)(EX1005, Abstract, 3:45-52, 5:50-62)(EX1002, ¶123). A PHOSITA would have been motivated to include holdover capacitance sufficient to provide operating power during the brief period, after identifying a battery failure but before a respective other power supply provides operating power to loads, because otherwise there might be an interruption of power, if only for a few milliseconds. (EX1007, ¶¶0044-0047, Figs. 4A, 4B)(EX1002, ¶¶123-127).

Furthermore, the use of holdover capacitance to store energy that can be used to temporarily provide output power was well-known in the art. (EX1005, Fig. 1, 5:4-8, 6:35-44, 7:23-28)(EX1006, ¶0003)(EX1002, ¶¶124-125). Indeed, the '967 patent itself admits that:

> "For purposes of the example, it is assumed that the power supply 106 includes capacitors or other internal storage (not shown) sufficient to provide conditioned power 110 to the load 112, while the power supply 108 transitions from standby (i.e., no output) to full power output mode. One of ordinary skill in the electrical arts will appreciate that **the use of output filtering, buffering or energy storage capacitors within power supplies is a common practice**, and no additional elaboration is required in this regard."

(EX1001, 3:39-48)(Emphasis added)(EX1002, ¶126)(EX1007, ¶0031).

The use of a holdover capacitance to provide temporary power during the transition of a partner power supply was therefore both desirable (to avoid even

momentary interruptions in power) and a well-known and predictable technique that could be used (and likely was used) to improve Susong's power supply devices. (EX1002, ¶127). *See KSR Int'l Co. v. Teleflex, Inc.*, 550 U.S. 398, 417-21 (2007).

C. Reasonable Expectation of Success

A PHOSITA would have had a reasonable expectation of success for the reasons discussed above in Ground 2. Additionally, a PHOSITA would have understood how to apply holdover capacitance within power supplies of Susong. The output of the power over Ethernet power supplies of Susong are 48 V DC (EX1007, ¶0010), and capacitors can provide DC power in a simple manner (*e.g.* parallel to the output of PSU 112). (EX1005, Fig. 1, capacitors 19 or 20)(EX1002, ¶128). This could have been done predictably. (EX1002, ¶128).

D. Analogous art

Susong is analogous art as discussed under Ground 2. **Zak** is analogous art because it is in the same field as the '967 patent ("the electrical arts", EX1001, 3:2-3, 3:44-48), and specifically is related to power supplies. (EX1005, Title, Abstract). Zak is also reasonably pertinent to a problem facing the named inventors. (EX1001, 1:32-33)(EX1005, Abstract)(EX1002, ¶129). *See Wyers*, 616 F.3d at 1238.

E. Claim Mapping

<u>CLAIM 2</u>

"2. The apparatus according to claim 1, the first power supply further configured to provide operating power to the electrical load

while the second power supply transitions from the lesser output level to the greater output level."

In the combination, holdover capacitance provided in Susong's devices would cause them to be **configured to provide operating power to the electrical load while the second power supply transitions from the lesser output level to the greater output level**. (EX1002, ¶130).

CLAIM 8

"8. The apparatus according to claim 1, the first power supply further configured to provide operating level power from internal energy storage to an electrical load while the second power supply transitions from the lesser output level to the greater output level in response to the activation signal."

See discussion above under claim 2. Claim 8 further requires that operating level power come from **internal energy storage**, which is met in the combination by the fact that operating level power comes from added holdover capacitance in Susong's power supplies. (EX1002, ¶131). Claim 8 also requires that the second power supply transitions **in response to the activation signal**. This is met by Susong's second power supply as discussed above under claim 1, element [1d]. (EX1002, ¶132).

CLAIM 11

"11. The system according to claim 9, the first and second power supplies respectively configured to provide operating level power to the electrical load for an amount of time sufficient for the other of the first and second power supplies to transition from the lesser

output level to the greater output level."

See discussion above under claims 2 and 8. These discussions apply equally to both the first and second power supplies, for the reasons discussed above under the Ground 2, pages 24-26 and claim 5. It further was obvious to configure a holdover capacitance to **provide operating level power to the electrical load for an amount of time sufficient** for a respective other power supply to transition to a greater output level in order to avoid any (even if brief) interruption in output power during such a transition (*see* pages 45-47, above). (EX1002, ¶132)(EX1006, ¶0003).

CLAIMS 14 AND 15

Claims 14 and 15 are obvious as discussed under Ground 2, except that the reference under claim element 14[e] to the discussion under claim 2 is replaced with the discussion under claim 2 in this Ground.

Ground 4. Claims 1, 4-7, 9-10, and 13 are obvious over Chang

Claims 1, 4-7, 9-10, and 13 would have been obvious over U.S. Pat. App. Pub. 2003/0042798 ("**Chang**")(EX1008).

Chang was published on March 6, 2003 and is thus prior art under pre-AIA 35 U.S.C. §102(b). Chang was not of record during prosecution.

A. Overview of Chang

Chang teaches a "multiple power sources control system". (EX1008, Title, Abstract)(EX1002, ¶134). One example of Chang's system is shown in Fig. 1:

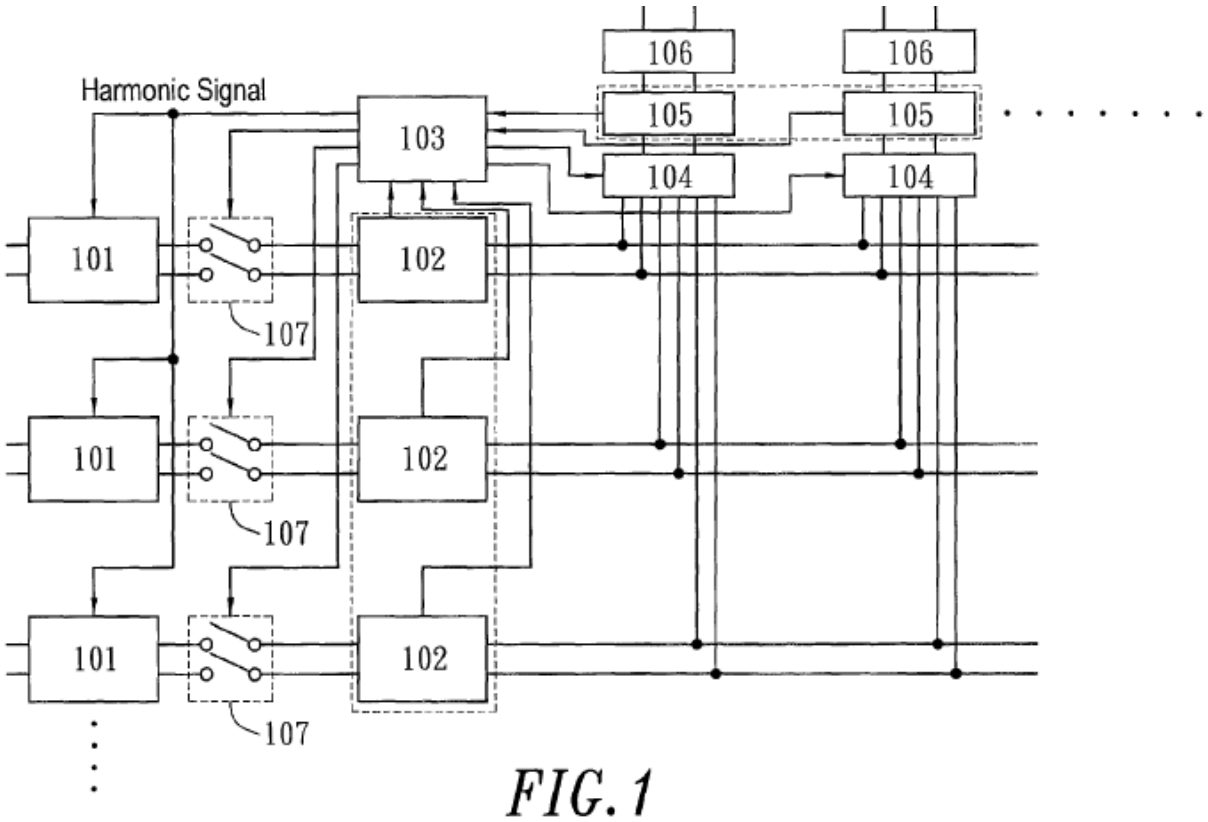

FIG. 1

(EX1008, Fig. 1)(EX1002, ¶134). In Fig. 1 of Chang, independent AC power sources are connected to respective power inputs 101 (left side), which are connected to control switches 107, which are in turn connected to voltage and current detecting modules 102. (EX1008, ¶0041)(EX1002, ¶134). At the output of modules 102, the power is routed to loads (connected at outputs 106).

The system of Chang monitors power at the input side 101 with voltage and current detecting modules 102. (EX1008, ¶0042)(EX1002, ¶135). If an abnormality is detected "such as no power supply, too low or high voltage and abnormal frequency, etc." (EX1008, Abstract), the respective module 102 informs a control module 103. (EX1008, ¶0042)(EX1002, ¶135). The control module 103 then

controls control switches 107 to disconnect an active power source and connect a previously-inactive power source, thus switching the load from one power source to another. (EX1008, ¶¶0044, 0041, 0011)(EX1002, ¶135). Chang explains:

> "**When one of independent input power source is in an abnormal state**, the voltage and current detecting module **will inform the control module** of the state, and then the control module controls the power source switching module immediately to **switch the power source** supplying to power output sides to other normal independent power sources of the power input sides such that loads can keep on obtaining required power."

(EX1008, ¶0011)(Emphasis added)(EX1002, ¶135).

B. Overview of the Obviousness Contention

Although Chang, like Susong, anticipates the challenged claims, the present Ground is one of single-reference obviousness. To the extent that Patent Owner argues that Chang does not expressly teach "inform[ing]" the control module of a failure of the power source by means of a "signal", it would have been obvious to use a signal.

This Ground also provides minor obviousness contentions where Chang does not elaborate on certain operational details, as explained below in the claim mapping.

C. Rationale (Motivation)

To the extent Patent Owner argues that Chang does not expressly teach "signals" (*e.g.* alert and/or activation signals), it would have been obvious in

Chang's system to use signals to implement the communication between control module 103 and each power supply (i.e., elements 101, 107, and 102). (EX1002, ¶138). Chang teaches that voltage and current detecting modules 102 detect abnormalities in the power input sides 101, and "**inform** the control module 103 of detected state". (EX1008, ¶0042)(Emphasis added) (EX1002, ¶138). Such informing is obviously done by "signals" because Chang is an electrical system, and Fig. 1 shows electrical connections between the voltage and current detecting modules 102 and the control module 103. Furthermore, Chang expressly states that control module 103 uses "signals" to turn the control switches 107 ON and OFF. (EX1008, ¶0041)(EX1002, ¶138). From these disclosures, it would have been immediately apparent to a PHOSITA that Chang's control module 103 communicates with voltage and current detecting modules 102 and control switches 107 using electrical signals—or that it would be obvious to use electrical signals—in particular when a module 102 informs module 103 of an abnormality and when the module 103 turns a respective control switch 107 ON, thus connecting the respective input side power source to an output. (EX1002, ¶138).

D. Reasonable Expectation of Success

There would have been a reasonable expectation of success for the reasons provided above under Ground 2, and additionally because the use of electrical signals to communicate between devices in an electrical system was commonplace

and predictable by 2009. (EX1002, ¶139).

E. Analogous Art

Chang is analogous art because it is in the same field as the '967 patent ("the electrical arts", EX1001, 3:2-3, 3:44-48), and specifically is related to power supplies. (EX1008, Title, Abstract). Chang is also reasonably pertinent to a problem facing the named inventors. (EX1001, 1:32-33)(EX1008, ¶0011)(EX1002, ¶140). *See Wyers*, 616 F.3d at 1238.

F. Claim Mapping

CLAIM 1

"[1a] An apparatus, comprising: a first power supply coupled to an electrical load and a first source of electrical energy,"

Chang teaches an **apparatus comprising a first power supply**. The apparatus is shown in Fig. 1, and has three parallel power supplies (each including elements 101, 107 and 102), the top-most of which is the **first power supply** (shown below with annotations identifying the first power supply (blue), the first source of electrical energy (green), and electrical loads (red)):

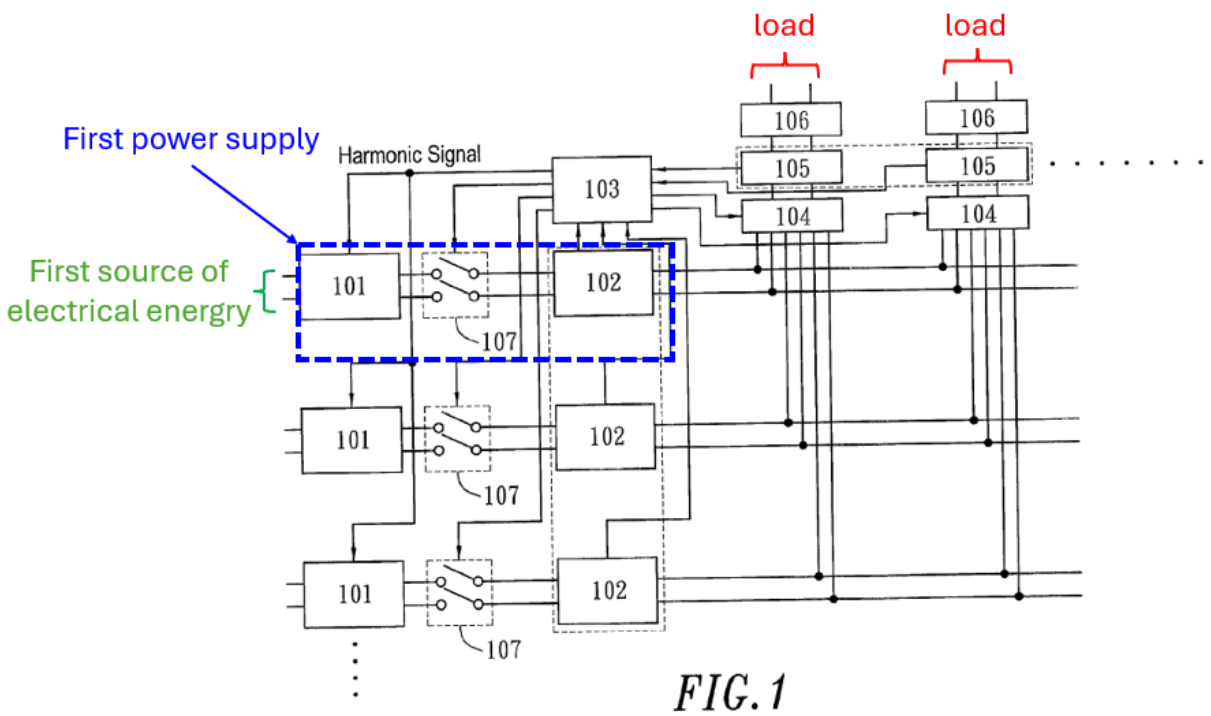

FIG. 1

(EX1008, Fig. 1, ¶¶0041-0046)(EX1002, ¶141). The claimed "power supply" is met by power input 101, control switch 107, and voltage and current detecting module 102 taken together. (EX1002, ¶142). As discussed above on page 12, a "power supply" in the '967 patent "can respectively include any circuitry, processor(s) or other resources as needed in order to perform in accordance with the present teachings", and can include "voltage or current sensing elements, etc." (EX1001, 2:62-3:6)(EX1002, ¶141).

The **first power supply** is **coupled** to **a first source of electrical energy**, because it has a power input (unit 101 in Fig. 1), that can receive an independent power source, such as a generator. (EX1008, ¶¶0041, 0011, 0046, claims 1, 2, 6)(EX1002, ¶142).

The **first power supply** is also **coupled** to **an electrical load,** because its unit 102 provides two output terminals that are connected, via switches 104 and detecting modules 105, to each power output side 106, each of which is in turn connected to a load. (EX1008, ¶¶0045, 0011, claims 1-7, Fig. 1)(EX1002, ¶143). Chang notes that there can be one power output side and one load, or more than one of either. (EX1008, ¶0045)(EX1002, ¶143).

"[1b] the first power supply configured to issue an alert signal indicative of a failure condition of the first source of electrical energy; and"

Chang teaches that **the first power supply** is **configured to issue an alert signal,** specifically an electrical signal issued from voltage and current detecting module 102 when it detects an abnormality (**failure condition**) in the **first source of electrical energy**. (EX1008, ¶¶0042, 0011, 0004, Abstract)(EX1002, ¶144). Chang explains:

> "The first voltage and current detecting module 102 is to detect if the power of the power input sides 101 are abnormal, and inform the control module 103 of detected state…."

(EX1008, ¶0042)(EX1002, ¶144). An abnormal state can include complete failure. (EX1004, Abstract, ¶0004)(EX1002, ¶144).

To the extent Chang does not expressly disclose use of a **signal** when module 102 to "inform[s] the control module 103 of detected state," this would have been

obvious for the reasons provided above on page 51. (EX1002, ¶145). The signal is an **alert** signal is **indicative of a failure condition**, because it informs module 103 of a failure condition. (EX1008, ¶¶0042, 0011, 0004, Abstract)(EX1002, ¶145).

"[1c] a second power supply coupled to the electrical load and a second source of electrical energy,"

The **second power supply** is met by the second set of modules 101, 107 and 102, identified with blue in Chang's Fig. 1, reproduced again with annotations here:

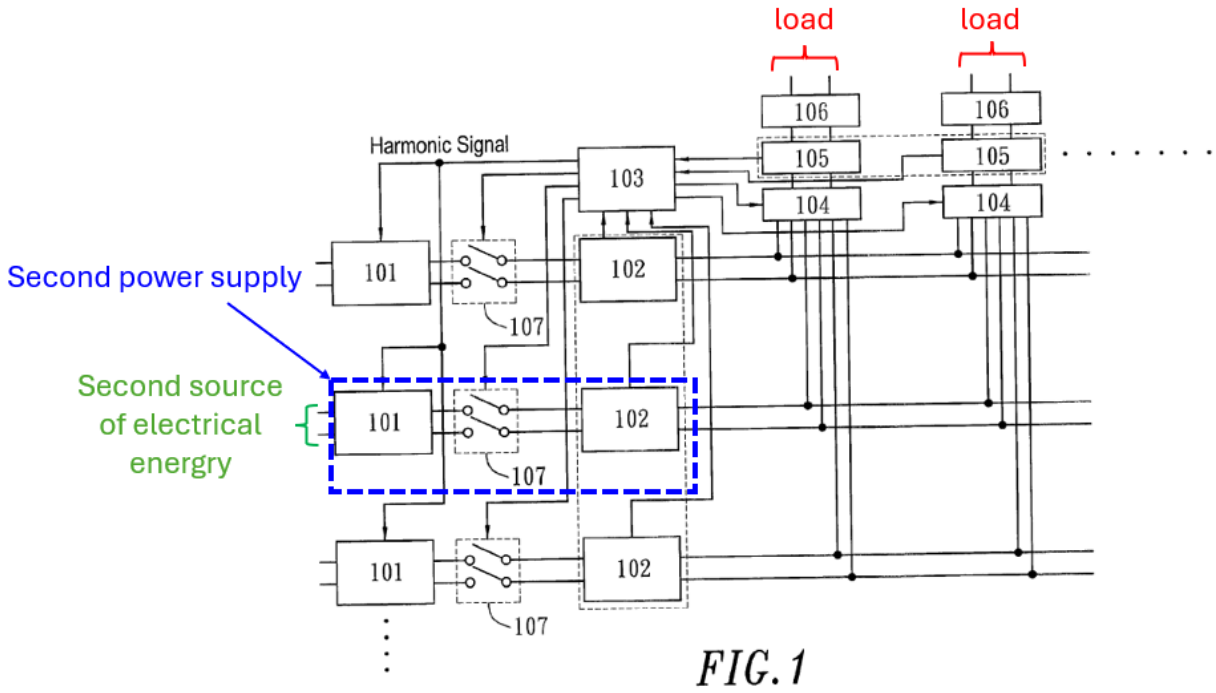

(EX1008, Fig. 1, ¶¶0041-0047)(EX1002, ¶46). The second power supply is coupled to the same loads as the first power supply, and is thus **coupled to the electrical load.** (EX1008, ¶0045, 0011, claims 1-7)(EX1002, ¶146).

The **second power supply** is also **coupled** to the **second source of electrical**

energy, because it has a power input (unit 101 of the second power supply in Fig. 1, above), that can receive a second independent power source, such as a second generator. (EX1008, ¶¶0041,0011, 0046, claims 1, 2, 6)(EX1002, ¶147).

"[1d] the second power supply configured to transition from a lesser output level to a greater output level in response to an activation signal."

Chang teaches that **the second power supply** is **configured to transition from a lesser output level to a greater output level in response to an activation signal**. Specifically, Chang teaches that its control module 103 operates control switches 107 (including control switch 107 in the second power supply, as identified under claim element [1c] above). Chang states:

> "there are at least two power input sides, which can receive two or more than two independent power sources; the **control switches 107 are in ON or OFF state controlled by the signal of the control module 103**."

(EX1008, ¶0041)(Emphasis added)(EX1002, ¶¶148-150). The "signal of the control module" that turns control switches 107 ON is the **activation signal**. (EX1002, ¶¶148-150). When the activation signal operates to turn switches 107 in the second power supply ON, it is causing **the second power supply** … **to transition from a lesser output level to a greater output level** by connecting the power input side 101 to the output, thereby transitioning the second power supply from zero output

power to full output power. (EX1008, ¶¶0041, 0011, Fig. 1)(EX1002, ¶¶148-150). The transitioning is **in response to** the activation signal, because the activation signal controls the switches 107. (EX1008, ¶0041)(EX1002, ¶¶148-150).

CLAIM 4

"4. The apparatus according to claim 1, the electrical load being configured to provide the activation signal to the second power supply in response to the alert signal from the first power supply."

Chang renders claim 4 obvious, specifically, by having control module 103 perform the claimed signaling and be an electrical load. First, Chang teaches and renders obvious having the control module 103 send the **activation signal** (the signal that controls switch 107 in the second power supply) **to the second power supply,** as discussed above under claim element [1d]. (EX1008, ¶¶0042, 0011, 0044, 0046, claim 1)(EX1002, ¶¶151-152). Chang teaches that the activation signal is sent "due to the state infirmed [sic: informed] from the first voltage and current modules 102" (Ex. 1008, ¶0044), *i.e.* in response to the alert signal from the first power supply. (Ex. 1002, ¶152).

Second, it would have been obvious to have the control module 103 receive power from the power supplies of the system (after an AC/DC conversion, if appropriate), because the control module 103 needs power to operate, and the power sources received by the input sides are the only apparent sources of power in the system. (EX1002, ¶153). Thus, it would have been obvious to a PHOSITA to use

power from Chang's system (*e.g*. from an output side 106) such that it is a "load" in the sense of the claims. A PHOSITA would have found it advantageous to configure Chang such that control module 103 is one of the loads, in order to provide reliable power to control module 103 and to avoid having to provide for an additional power supply, and could have implemented this with a reasonable expectation of success as a matter of routine power engineering. (EX1002, ¶153). It would thus have been obvious for the **load** to be **configured to provide the activation signal to the second power supply in response to the alert signal from the first power supply**. (EX1002, ¶153).

CLAIM 5

> ***"5. The apparatus according to claim 1, the first power supply further configured to transition from a lesser output level to a greater output level in response to a signal indicative of an anomaly in the second source of electrical energy."***

As shown under claim 1, elements [1a] and [1c], the second power supply (101, 107, 102) is of the same type as the first power supply, and the description under claim 1 of the configuration and operation of the first power supply applies equally to the second power supply. (EX1008, ¶¶0041-0047, Fig. 1)(EX1002, ¶154). Thus, when the *second* power supply is active and its voltage and current detecting module 102 detects an abnormality (EX1008, ¶0042), it will inform the control module 103, which will control the control switches 107 to transition the load from the second power supply to the *first* power supply, as explained

reciprocally under claim 1, element [1d] for the second power supply. (EX1002, ¶154). The **signal indicative of an anomaly in the second source of electrical energy** is met by the "signal of the control module" that turns control switches 107 ON, or alternatively, is taught or rendered obvious by detecting module 102 informing control module 103 of an abnormality; each of which causes **the first power supply to transition from a lesser output level** (zero output power) **to a greater output level** (full output power)**.** (EX1008, ¶¶0041-0047, 0011, Figs. 1)(EX1002, ¶154).

CLAIM 6

"[6a]. The apparatus according to claim 1, at least the first or second power supply configured to operate at a lesser output level in response to a standby signal,"

Chang renders this element obvious. As discussed above under claim 1, element [1d], in response to an alert signal, control module 103 sends a signal (**standby signal**) to turn switch 107 in the first power supply OFF, thereby disconnecting the power in the first power supply from the output, and causing the first power supply to **operate at a lesser output level**. (EX1008, ¶¶0041, 0044, 0046, 0011)(EX1002, ¶¶155-156). Because both power supplies are identical (as discussed under claim 5), the second power supply is also configured to **operate at a lesser output level** (no output) **in response to a standby signal**. (*Id.*)

"[6b] the first power supply further configured to transition from the lesser output level to a greater output level in response to a respective activation signal."

See above, discussion under claim 1, element [1d] (discussing the second power supply transitioning to a greater output level based on an activation signal) and claim 5. Because the first and second power supplies in Fig. 1 of Chang are identical, the discussion with respect to the second power supply also applies to the first power supply. (EX1002, ¶157).

CLAIM 7

"7. The apparatus according to claim 1 further comprising a third power supply configured to transition from a lesser output level to a greater output level in response to an activation signal."

In the embodiment of Fig. 1 of Chang, there is a third power supply, as shown in the following annotated version of Fig. 1:

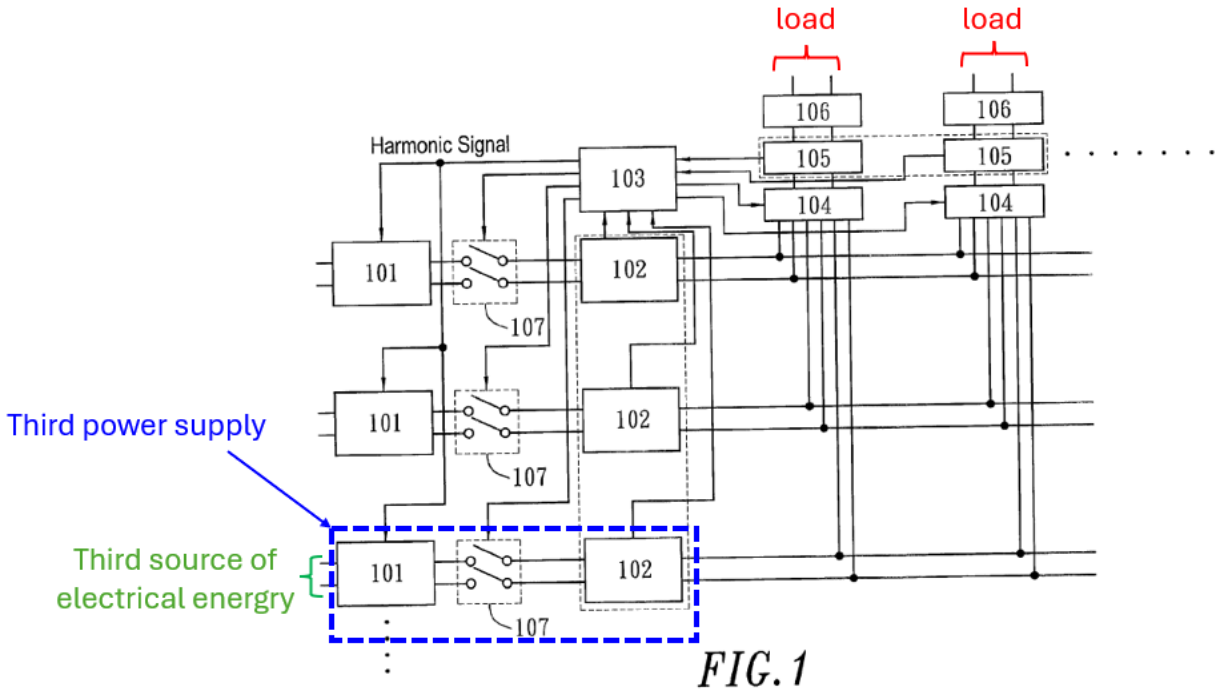

(EX1008, Fig. 1)(see also EX1008, ¶0041)(EX1002, ¶158).

With respect to the third power supply being **configured to transition from a lesser output level to a greater output level in response to an activation signal,** *see* the discussion above under claim 1, element [1d], which applies to the third power supply because each of the power supplies is identical (*see* discussion under claim 5, above). (EX1002, ¶159).

CLAIM 9

"[9a]. A system, comprising: an electrical load;"

See discussion above under claim 1, element [1a]. Fig. 1 of Chang shows a **system**. (EX1008, Fig. 1, ¶¶0013, 0041)(EX1002, ¶160).

"[9b] a first power supply coupled to a first independent source of

electricity and to the electrical load,"

See discussion above under claim 1, element [1a]. Claim element [1a] recites "a first source of electrical energy", whereas the present claim element [9b] recites "a first *independent* source of *electricity*". However, electricity *is* electrical energy. (EX1002, ¶161). With respect to the first source of electrical energy being **independent**, Chang teaches this. (EX1008, ¶0041)("at least two power input sides, which can receive two or more than two **independent** power sources")(Emphasis added)(*see also* EX1008, ¶¶0010, 0011, 0046, claims 1, 2, 6)(EX1002, ¶161).

"[9c] the first power supply configured to provide a first alert signal indicative of an anomalous condition of the first independent source of electricity; and"

See discussion above under claim 1, element [1b]. Claim 1 requires a "failure condition", whereas the present element requires "an anomalous condition". Chang teaches detecting a failure (**anomalous condition**). (EX1008, Abstract, ¶¶0004, 0008, 0011, 0042)(EX1002, ¶162).

"[9d] a second power supply coupled to a second independent source of electricity and to the electrical load,"

See discussion above under claim 1, element [1c]. The second source of electrical energy discussed under claim 1, element [1c] is a **second independent source of electricity** for the same reasons discussed above for the first independent

source of electricity under claim element [9b]. (EX1008, ¶0041)(EX1002, ¶163).

"[9e] the second power supply configured to provide a second alert signal indicative of an anomalous condition of the second independent source of electricity,"

This element is similar to element [9c], except that it applies to the second power supply, issuing a second alert, based on an anomalous condition of the second independent source of electricity. The reasoning presented under element [9c] is applicable here, because the second power supply is identical to the first, as discussed above under claims 5 and 6. (EX1002, ¶164).

"[9f] the first power supply further configured to transition from a lesser output level to a greater output level in response to a first activation signal,"

See discussion above under claim 1, element [1d] and claims 5-6. Although the discussion under claim 1, element [1d] relates to the *second* power supply, the first power supply is identical. (EX1002, ¶165). Here, the **first activation signal** is a signal from the control module 103 to turn control switch 107 in the first power supply ON. (EX1008, ¶¶0044, 0041)(EX1002, ¶165).

"[9g] the second power supply further configured to transition from a lesser output level to a greater output level in response to a second activation signal."

See discussion above under claim 1, element [1d]. Here, the **second**

activation signal is a signal from the control module 103 to turn control switch 107 in the second power supply ON. (EX1008, ¶¶0044, 0041)(EX1002, ¶166).

CLAIM 10

"10. The system according to claim 9, at least the first or second power supply further configured to operate at a lesser output level in response to a standby signal."

See above, discussion under claim 6, element [6a]. (Ex. 1002, ¶167).

CLAIM 13

"13. The system according to claim 9, the electrical load configured to provide the second activation signal in response to the first alert signal, the electrical load further configured to provide the first activation signal in response to the second alert signal."

See discussion above under claim 4. Claim 13 adds that the "electrical load is further configured to provide the first activation signal in response to the second alert signal." As explained for claim 5, the first and second power supplies are identical, such that the configuration and operation of the first power supply applies equally to the second power supply. As a result, in Chang, the control module 103 (load) is configured to issue signals to control the switches 107 (the activation signal) in response to receiving the alert signal. (EX1008, ¶¶0041, 0044)(EX1002, ¶168).

Ground 5. Claims 1-15 are obvious over Chang and Edelen

Claims 1-15 would have been obvious over **Chang** (as discussed in Ground 4) in view of U.S. Pat. App. Pub. 2006/0226706 ("**Edelen**")(EX1009).

Edelen was published on October 12, 2006 and is thus prior art under pre-AIA 35 U.S.C. §102(b). Edelen was not of record during prosecution.

A. Overview of the Obviousness Contention

Chang alone renders claims 1, 4-7, 9-10, and 13 obvious as discussed under Ground 4, above.

The present Ground further contends that it was obvious to modify Chang to combine each set of three units 101, 107, and 102 with a parallel battery backup into a single uninterruptible power supply, as conceptually depicted in the following modified Fig. 1 of Chang:

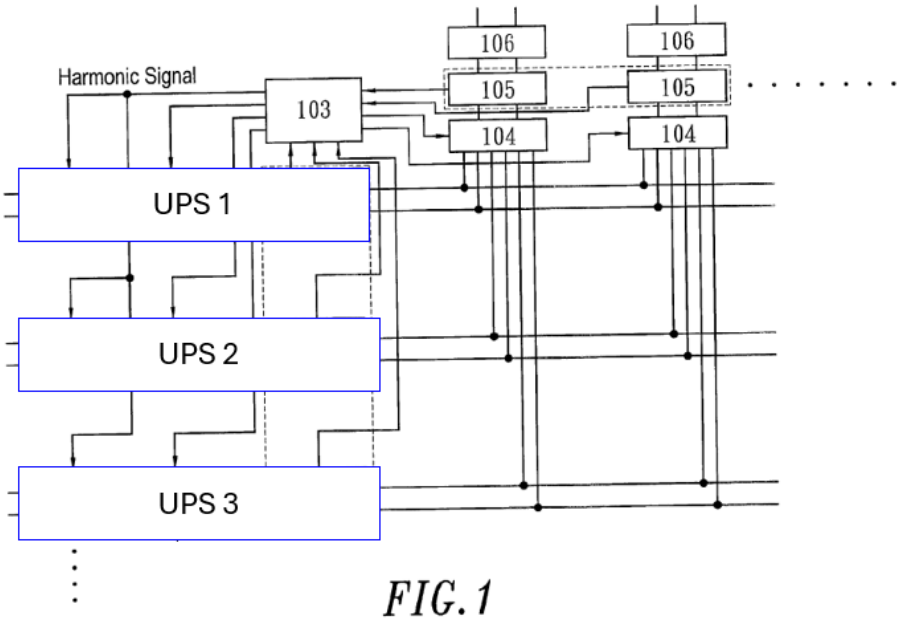

(EX1008, Fig. 1 (modified))(EX1002, ¶171).

In the present Ground, claims 1, 4-7, 9-10, and 13 are obvious as in Ground 4, with the modification that the function of modules 101, 107 and 102 in Chang is

provided in a single UPS with a battery backup. (EX1002, ¶¶172-173).

Additional obviousness contentions are described in the claim mapping section for certain dependent claims.

B. Overview of Edelen

Like Chang, Edelen teaches a power supply system that can switch between multiple independent sources of power to ensure continuous supply of power to a load. (EX1009, ¶0001)(EX1002, ¶¶174-183). Edelen teaches a form of Uninterruptible Power Supply (UPS), two of which (410a and 410b) are shown in Fig. 4 of Edelen:

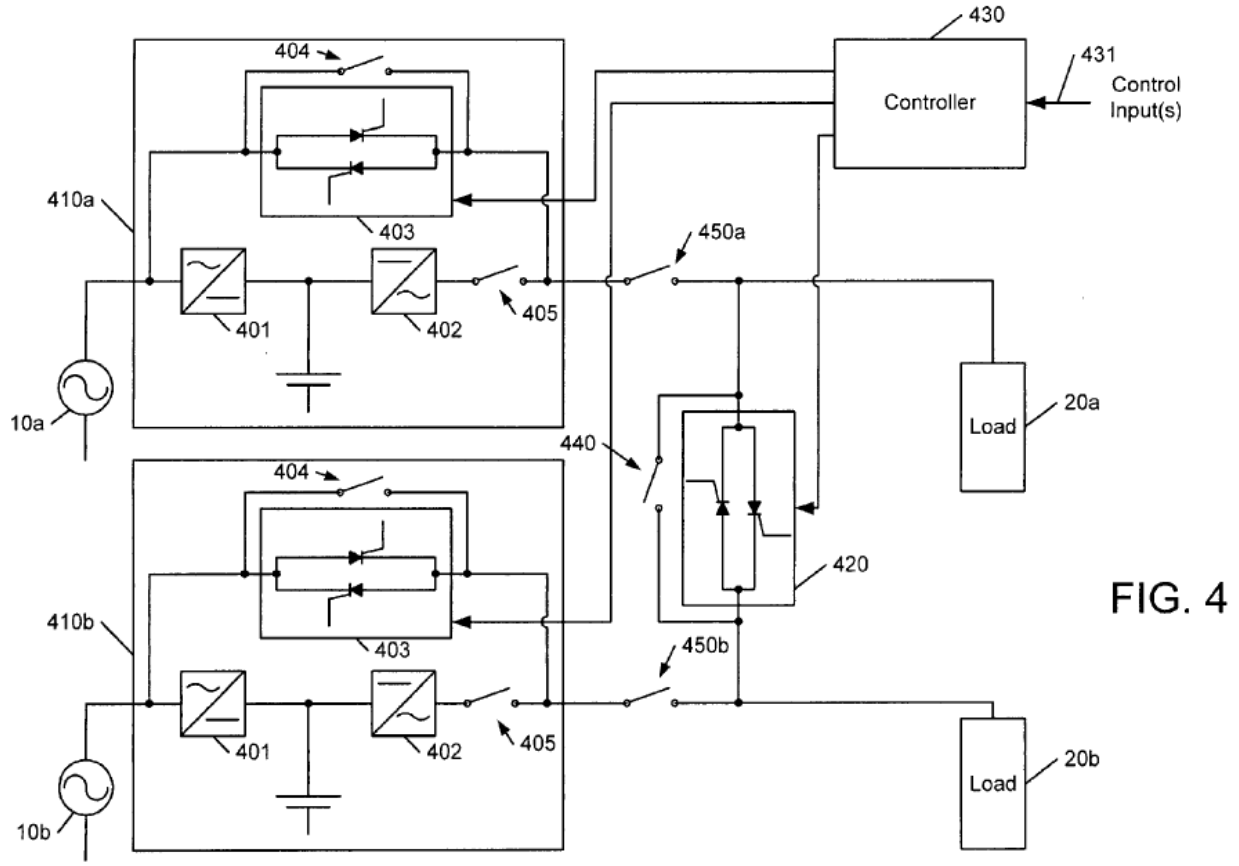

FIG. 4

(EX1009, Fig. 4, ¶¶0023-0024)(EX1002, ¶175). In Fig. 4, two different power sources (10a and 10b, left side) respectively energize two UPSs (410a and 410b), which then provide power to loads 20a and 20b (right side). (EX1009, ¶0023)(EX1002, ¶176). Within each power supply (*e.g.* 410a), there is a static switch 403 that, when ON, allows the power source (*e.g.* 10a) to be connected directly to the output of the power supply. (EX1009, ¶0023)(EX1002, ¶176). When the static switch 403 is OFF, and the power source is not directly connected to the output, power can be provided to the output by the AC/DC converter 401, battery, and DC/AC converter 402, which together are connected in parallel with the static switch. (EX1009, ¶0024 (switch off), ¶0002 (function of battery in the UPS))(EX1002, ¶176).[6]

Edelen teaches switching power from one UPS to another in the event of a failure, by opening (turning OFF) the first static switch of the first UPS and closing (turning ON) the second static switch of the second UPS. Edelen states:

> "The controller circuit may be operative to transition the load from a first state wherein the load receives power from the first power source via the first static switch to a second state wherein the load

[6] Petitioner notes that Edelen sometimes uses the numeral 404 for the "static switches" of Fig. 4, but it is clear that Edelen is referring to the structure 403 in Fig. 4 with the term "static switch". (EX1002, ¶176).

> receives power from the second power source while isolated from the first power source. In particular, the controller circuit may be configured to cooperatively **open the first static switch and close the second static switch to transition the load** from the first state to the second state."

(EX1009, ¶0005)(Emphasis added)(*see also* EX1009, ¶¶0008-0009, claim 22)(EX1002, ¶177).

Edelen further teaches various arrangements for its UPSs and switch controllers. (EX1009, Fig. 5, ¶¶0025-0027)(EX1002, ¶178). Edelen's UPSs can *contain* static switch controllers, or interact with an external static switch controller via communication interfaces. Edelen's UPSs can also integrate circuitry to sense voltages or other conditions that warrant load transfer. (EX1009, ¶0026)(EX1002, ¶¶177-183).

C. Rationale (Motivation) Supporting Obviousness

It would have been obvious to provide the functionality of each set of modules 101, 107, and 102 in the system of Fig. 1 of Chang as a single Uninterruptible Power Supply (UPS), each with a battery backup. (EX1002, ¶184).

As relevant context, Chang and Edelen are broadly similar, because they both use multiple power sources to power loads, and switch the power sources when there is a problem with the active source. (EX1008, ¶¶0041-0047, 011)(EX1009, ¶¶0023-0027, ¶¶0008-0009)(EX1002, ¶185). Each reference uses a controller (control

module 103 in Chang and static switch controller, *e.g.* 430, in Edelen) to disconnect one power source while connecting a second power source to the load. (EX1008, ¶¶0011, 0047)(EX1009, ¶¶0005, 0008-0009, 0024)(EX1002, ¶185). To do this, both references use switches (switches 107 in Chang and static switches (*e.g.* 522a and 522b) in Edelen) to connect or disconnect power sources to a load. (EX1008, ¶0044)(EX1009, ¶¶0005, 0008-0009, 0026-0027)(EX1002, ¶185). Both references will switch to a second power source if a failure in a first power source is detected. (EX1008, ¶¶0042-0044, 0011, Abstract)(EX1009, ¶¶0024, 0005, 0008-0009)(EX1002, ¶185).

Furthermore, the UPSs of Edelen Fig. 5 can have built-in functionalities required by the power supplies of Chang (modules 101, 107, and 102), such that a PHOSITA would have found them similar to Chang's modules 101, 107, and 102. (EX1002, ¶186). Specifically, the UPSs of Edelen receive power (like the power input 101 of Chang), provide a controllable switch (*e.g.* static switch 522a) that can connect or disconnect the power source from the output (like switch 107 of Chang), provide voltage-monitoring ability (like module 102 of Chang), and provide the ability to notify a controller of the state of the power source (again like module 102 of Chang). (EX1009, ¶¶0025, 0021, 0005, 0008-0009 (Edelen's switches), ¶¶0027, 0004 (integrated voltage monitoring), ¶¶0025-0027, 0015, 0007, Fig. 5, claims 7, 8 (communications interface))(EX1002, ¶186).

A PHOSITA, in view of Chang and Edelen, would have found it obvious to integrate each set of three modules 101, 107, and 102 into a single UPS device. (EX1002, ¶187). First, Chang describes the numbered boxes 101, 107, and 102 (and others) in Fig. 1 in terms of their functions, and not in terms of whether they represent separate physical devices or components of physical devices that combine multiple such components. (EX1008, ¶¶0041-0047)(EX1002, ¶187). Chang thus leaves open the extent to which the components of Fig. 1 are integrated into single devices or merely in functionally and physically *interconnected* devices. (EX1008, ¶¶0041-0047, ¶0054)(EX1002, ¶187). Edelen teaches UPS devices that can be integrated into single device structures and have similar capabilities to Chang, as explained above. (EX1002, ¶187). Edelen also teaches that such single devices can have battery backup, controlled switching, communication, and power monitoring capabilities. (EX1009, ¶¶0025-0027, 0002)(EX1002, ¶187). A PHOSITA would have understood from Edelen that the arrangement of various functionalities into a unit with a single housing or into several units was, in 2009, a simple matter of design choice, and a predictable variation among well-known equivalents. *See* KSR, 550 U.S. at 417-21. Furthermore, a PHOSITA would have understood that integrating such functionalities into a single device would have provided space-saving advantages, particularly in contexts where space is at a premium. (EX1002, ¶187).

A PHOSITA would have perceived advantages in using a parallel battery backup as suggested by Edelen, which (via an inverter), can maintain AC power at the output for some time after failure of a respective power source. (EX1009, ¶0002, Fig. 1, Fig. 4)(EX1002, ¶188). A PHOSITA would have found this advantageous for Chang's system, which attempts to maintain power at all times to loads, because otherwise "loads may not work or objects of loads are damaged." (EX1008, ¶0004, see also ¶¶0001-0003, 0011)(EX1002, ¶188). Chang's system is also directed to switching loads between power sources quickly, such that the battery backup of a UPS is not exhausted prior to load switching (EX1008, ¶¶0004-0009), and Chang expressly contemplates UPS systems as power sources (EX1008, ¶0011)(EX1002, ¶188). A PHOSITA would have advantageously configured the size of the battery to provide for operating-level power during the brief interval of transition from one power supply to another. (EX1002, ¶188).

D. Reasonable Expectation of Success

There would have been a reasonable expectation of success for the reasons provided above under Ground 2, and additionally because the UPSs with parallel battery backup and integrated controls were commonplace and predictable by 2009. (EX1002, ¶189).

E. Analogous Art

Chang is analogous art as discussed in Ground 4. **Edelen** is analogous art

because it is in the same field as the '967 patent ("the electrical arts", EX1001, 3:2-3, 3:44-48), and specifically is related to power supplies. (EX1009, Title, Abstract). Edelen is also reasonably pertinent to a problem facing the named inventors. (EX1001, 1:32-33)(EX1009, Abstract, ¶¶0023-0025)(EX1002, ¶190). *See Wyers*, 616 F.3d at 1238.

F. Claim Mapping

CLAIMS 1, 4-7, 9-10, and 13

The mapping for claims 1, 4-7, 9-10, and 13 is the same as in Ground 4, except that each set of functional boxes 101, 107 and 102 depicted in Fig. 1 of Chang is integrated into a single UPS device with a battery backup, and the thus-modified UPS devices are the power supplies of the claims. (EX1002, ¶191).

CLAIM 2

> ***"2. The apparatus according to claim 1, the first power supply further configured to provide operating power to the electrical load while the second power supply transitions from the lesser output level to the greater output level."***

The combination renders obvious claim 2. In the combination, a battery backup in each UPS provides power in the event that the main power source energizing that UPS fails. (EX1009, ¶0002, Fig. 1, Fig. 4)(EX1002, ¶192). This occurs in the combination when the first power supply receives a signal to turn the switch 107 OFF, disconnecting the first source of power from the output, allowing the parallel battery backup to provide power. (EX1002, ¶192). Thus, when there is

a failure condition reported by the first power supply, the first power supply is configured to provide operating power to the electrical load during the brief interval while the second power supply transitions from the lesser output level to the greater output level (as discussed under Ground 4, element [1d]). (EX1002, ¶192).

CLAIM 3

> ***"3. The apparatus according to claim 1, the first and second power supplies being coupled such that the activation signal is defined by the alert signal."***

The combination renders claim 3 obvious. Specifically, it would have been obvious based on Edelen to incorporate Chang's control module 103 into any of the combination's UPSs, based on Edelen's express teachings. Edelen teaches having a switch controller, integrated with a UPS, "serve in the monitor/master role" (EX1009, ¶0027), in which case it will sense failure in the first power supply and issue a command message to the second power supply. (EX1009, ¶0026)(EX1002, ¶193). It would have been obvious based on this teaching to have the first power supply (UPS 1) serve in the monitor/master role and issue a command message (**alert signal**) that is received by the second UPS as the **activation signal** to transition to a greater output level, thus making the activation signal be **defined by the alert signal**. (EX1002, ¶193). A PHOSITA would have been motivated to do this based on the express suggestion of Edelen, and to facilitate faster communications between power supplies. (EX1002, ¶193). A PHOSITA could

have done this with a reasonable expectation of success. (EX1002, ¶193).

CLAIM 8

> ***"8. The apparatus according to claim 1, the first power supply further configured to provide operating level power from internal energy storage to an electrical load while the second power supply transitions from the lesser output level to the greater output level in response to the activation signal."***

See claim 2. Operating-level power comes **from internal energy storage…while the second power supply** is transitioning, because power comes from the parallel battery system **internal** to each UPS. (EX1009, ¶0002, Fig. 1, Fig. 4)(EX1002, ¶194).

CLAIM 11

> ***"11. The system according to claim 9, the first and second power supplies respectively configured to provide operating level power to the electrical load for an amount of time sufficient for the other of the first and second power supplies to transition from the lesser output level to the greater output level."***

See claims 2 and 8. These discussions apply equally to both the first and second power supplies, for the reasons discussed above under Ground 4, claims 5 and 6, beginning on page 59. It further was obvious to configure a battery backup to provide operating-level power for a time sufficient for another power supply to transition to a greater output level to avoid any interruption (even if brief) in power. (EX1002, ¶195).

CLAIM 12

"12. The system according to claim 9, the second activation signal defined by the first alert signal, the first activation signal defined by the second alert signal."

See claim 3. The configuration described under claim 3 (wherein the first power supply contains a controller in the master role) also results in the **first activation signal** being **defined by the second alert signal**, because the second alert signal (sent by the second UPS indicating an anomalous condition of the second independent source of electricity) is received by the master controller in the first UPS, and the first UPS is configured to transition from a lesser output level to a greater output level in response to the second alert signal. (EX1009, ¶¶0026-0027)(EX1002, ¶196).

CLAIM 14

"[14a]. A method, comprising: asserting a signal responsive to an anomalous condition of a first independent source of electrical energy,"

See Ground 4, claim 1, elements [1a] and [1b]. *See also* discussion of elements [9b] and [9c] for "independent" and "anomalous." (Ex. 1002, ¶197).

"[14b] the first independent source of electrical energy coupled to energize a first power supply;"

See Ground 4, claim 1, element [1a]. The first independent source of electrical energy is **coupled to energize a first power supply** because it provides the power

to the power supply. (EX1008, ¶0041)(EX1002, ¶198).

"[14c] transitioning a second power supply from a standby output level to a normal output level responsive to the signal,"

See Ground 4, claim 1, element [1d], discussing the transition of a second power supply from a lesser to a greater output level. Chang renders obvious that, when an abnormal condition is detected by the first power supply, it will inform control module 103 (**the signal**), and in response control module 103 will transition a second power supply **from a standby output level to a normal output level**. (EX1002, ¶199). Specifically, when the power supplies are isolated from the loads (because control switches 107 are OFF), they are supplying no power (**a standby output level**), whereas when they are active because control switches 107 are ON, they are supplying **normal operating power**. (EX1008, ¶¶0041, 0044)(EX1002, ¶199).

"[14d] the second power supply energized by a second independent source of electrical energy; and"

See Ground 4, claim 1, element [1c] and elements [14a] and [14b]. (EX1002, ¶200).

"[14e] providing operating power from the first power supply to an electrical load during the transitioning."

See this Ground's discussion under claim 2, above. (EX1002, ¶201).

CLAIM 15

"15. The method according to claim 14 further comprising communicating the signal from the first power supply to the second power supply, the second power supply providing operating power to the electrical load after the transitioning to normal output level."

The combination renders claim 15 obvious. Under claim 3 it is explained why the combination renders obvious sending an alert signal from one UPS (directly) to another UPS, *i.e.* **communicating the signal from the first power supply to the second power supply**. (EX1002, ¶202). Furthermore, as explained under element [14c], in response to **the signal**, the **second power supply provides a normal output level**. (EX1008, ¶0011)("keep on obtaining required power.")(*see also* EX1008, ¶¶0051-0052, 0008)(EX1002, ¶202).

Thus, the transfer from the first power supply to the second power supply causes **the second power supply to provide operating power to the electrical load** when the switch 107 is turned ON at the second power supply, **i.e. after the transitioning to normal output level**. (EX1008, ¶¶0009, 0052)(EX1002, ¶203).

IV. DISCRETIONARY DENIAL IS NOT WARRANTED

The Board should not discretionarily deny the Petition, because the prior art is new, the grounds are compelling, the Petition was filed expeditiously, the investment in parallel proceedings has been limited, and trial in those proceedings would be expected after a final decision in this proceeding.

V. CONCLUSION

Petitioner respectfully requests that claims 1-15 of the ’967 patent be canceled.

Date: June 12, 2025	/Matthew A. Smith/ (RN 49,003) Matthew A. Smith SMITH BALUCH LLP 700 Pennsylvania Ave SE Ste. 2060 Washington, DC 20003 (202) 669-6207 smith@smithbaluch.com *Counsel for Petitioner Google LLC*

CERTIFICATE OF SERVICE

The undersigned hereby certifies that the foregoing petition for *inter partes* review, together with all exhibits and other documents filed therewith, was served by USPS – Express Mail on June 13, 2025, on the Patent Owner's counsel of record at the United States Patent & Trademark Office having the following address:

Hewlett Packard Enterprise
3404 E. Harmony Road
Mail Stop 79
Fort Collins, CO 80528
UNITED STATES

Date: June 13, 2025 /Matthew A. Smith/ (RN 49,003)

CERTIFICATE OF WORD COUNT

The undersigned hereby certifies that the foregoing petition for *inter partes* review contains 13,993 words according to the word processing program used to prepare it.

Date: June 12, 2025 /Matthew A. Smith/ (RN 49,003)