US 20100165077A1

(19) United States

(12) Patent Application Publication

Yin et al.

(10) Pub. No.: US 2010/0165077 A1

(43) Pub. Date: Jul. 1, 2010

(54) **MULTI-VIEW VIDEO CODING USING SCALABLE VIDEO CODING**

(76) Inventors: **Peng Yin**, West Windsor, NJ (US); **Cristina Gomila**, Princeton, NJ (US); **Yeping Su**, Vancouver, WA (US)

Correspondence Address:
**Robert D. Shedd, Patent Operations**
**THOMSON Licensing LLC**
**P.O. Box 5312**
**Princeton, NJ 08543-5312 (US)**

(21) Appl. No.: **11/992,721**

(22) PCT Filed: **Oct. 17, 2006**

(86) PCT No.: **PCT/US06/40658**

§ 371 (c)(1),
(2), (4) Date: **Mar. 28, 2008**

**Related U.S. Application Data**

(60) Provisional application No. 60/728,141, filed on Oct. 19, 2005.

**Publication Classification**

(51) **Int. Cl.**
*H04N 13/00* (2006.01)
*H04N 7/12* (2006.01)

(52) **U.S. Cl.** ..... **348/42**; 375/240.01; 375/240.13; 375/E07.076; 375/E07.027; 348/E13.001

(57) **ABSTRACT**

There are provided methods and apparatus for stereoscopic video coding using scalable video coding. A scalable video encoder includes an encoder (**100**) for encoding at least two views corresponding to multi-view video content by, encoding a particular view of the at least two views as a base layer, and encoding each of at least one other view of the at least two views as an enhancement layer using a prediction from a lower layer corresponding to at least one of the particular view and the at least one other view. The at least two views are encoded based on a selection from among at least two of temporal, spatial, and signal to noise ratio scalability techniques.

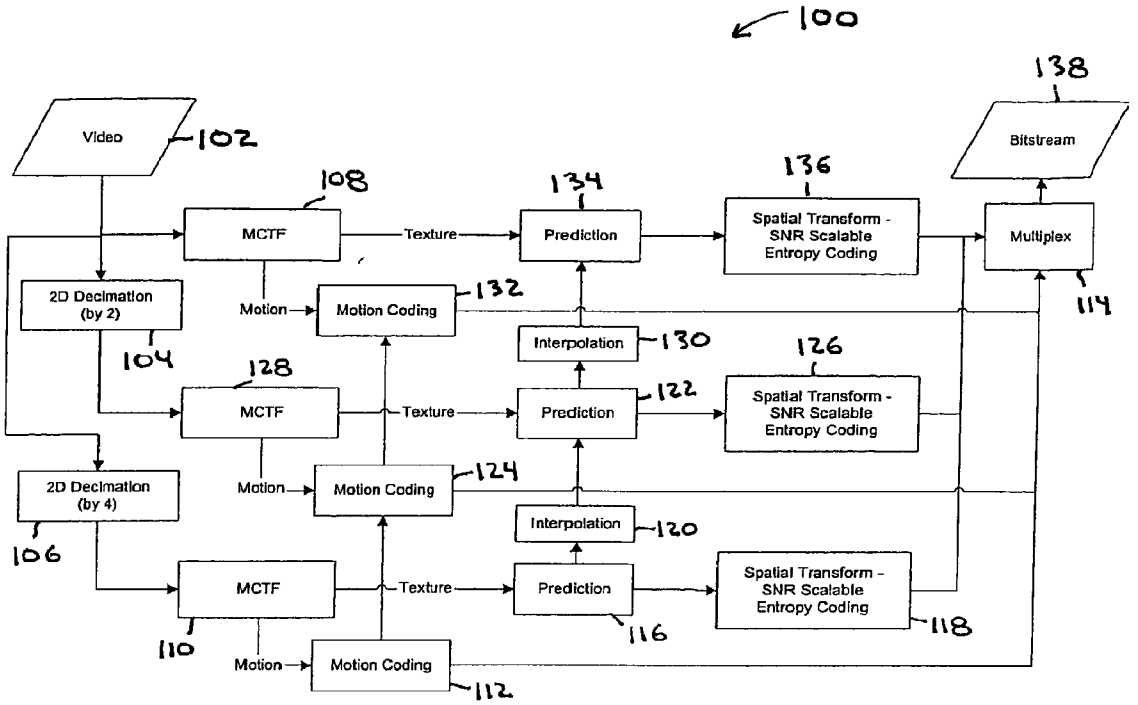




APPLE-1014

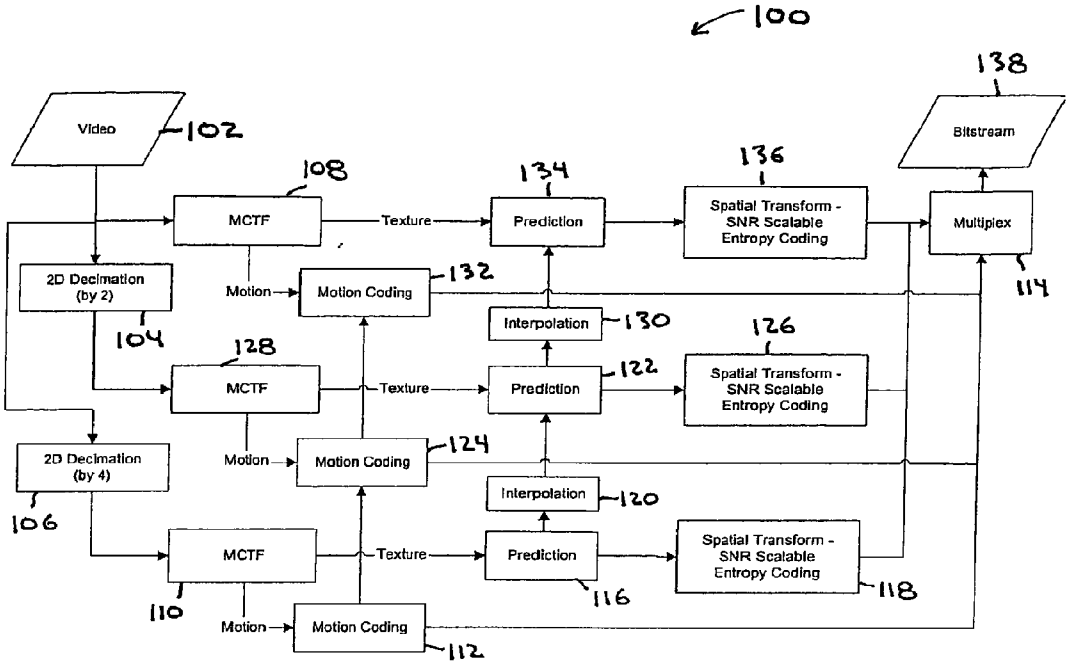
100
Video
102
2D Decimation (by 2)
104
2D Decimation (by 4)
106
MCTF
108
MCTF
128
MCTF
110
Texture
Texture
Texture
Motion
Motion
Motion
Motion Coding
132
Motion Coding
124
Motion Coding
112
Prediction
134
Interpolation
130
Prediction
122
Interpolation
120
Prediction
116
Spatial Transform - SNR Scalable Entropy Coding
136
Spatial Transform - SNR Scalable Entropy Coding
126
Spatial Transform - SNR Scalable Entropy Coding
118
Multiplex
114
Bitstream
138

FIG. 1

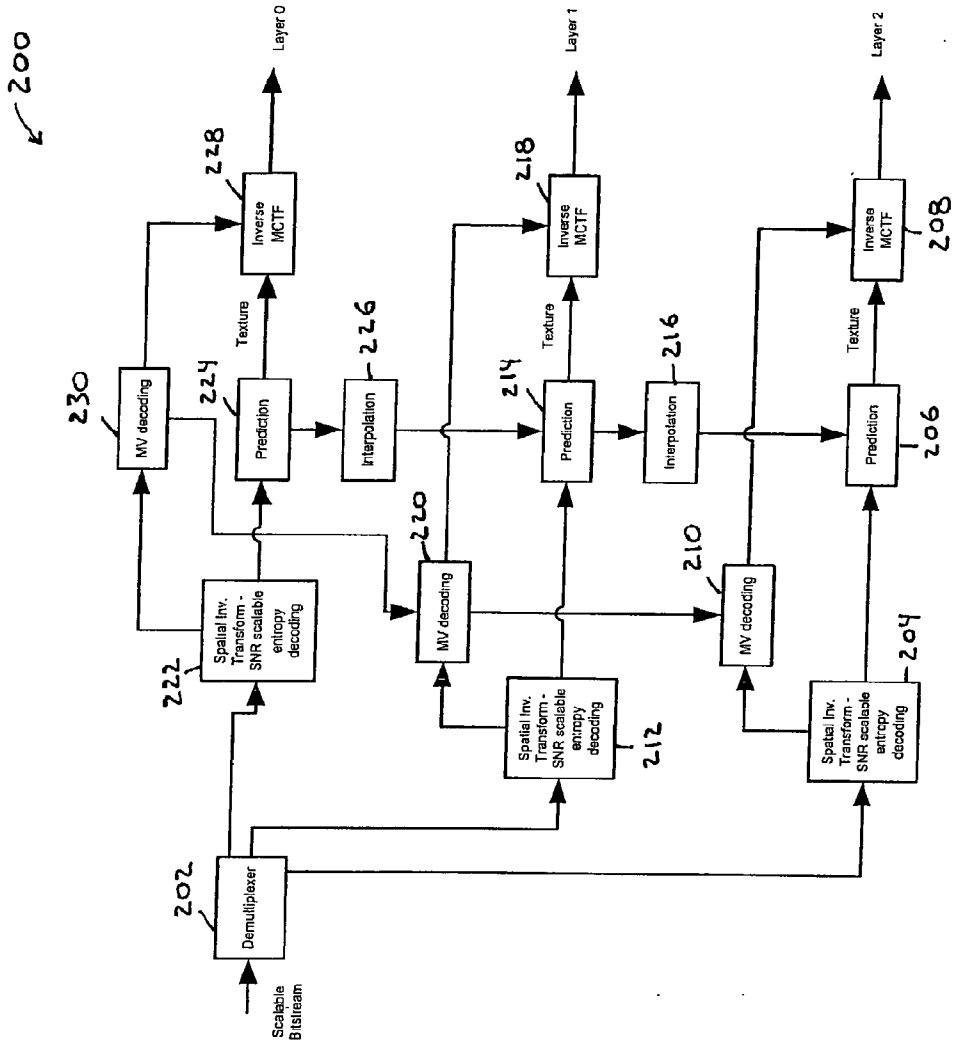
200
Scalable Bitstream
202
Demultiplexer
222
Spatial Inv. Transform - SNR scalable entropy decoding
230
MV decoding
224
Prediction
Texture
228
Inverse MCTF
Layer 0
226
Interpolation
220
MV decoding
212
Spatial Inv. Transform - SNR scalable entropy decoding
214
Prediction
Texture
218
Inverse MCTF
Layer 1
216
Interpolation
210
MV decoding
204
Spatial Inv. Transform - SNR scalable entropy decoding
206
Prediction
Texture
208
Inverse MCTF
Layer 2

FIG. 2

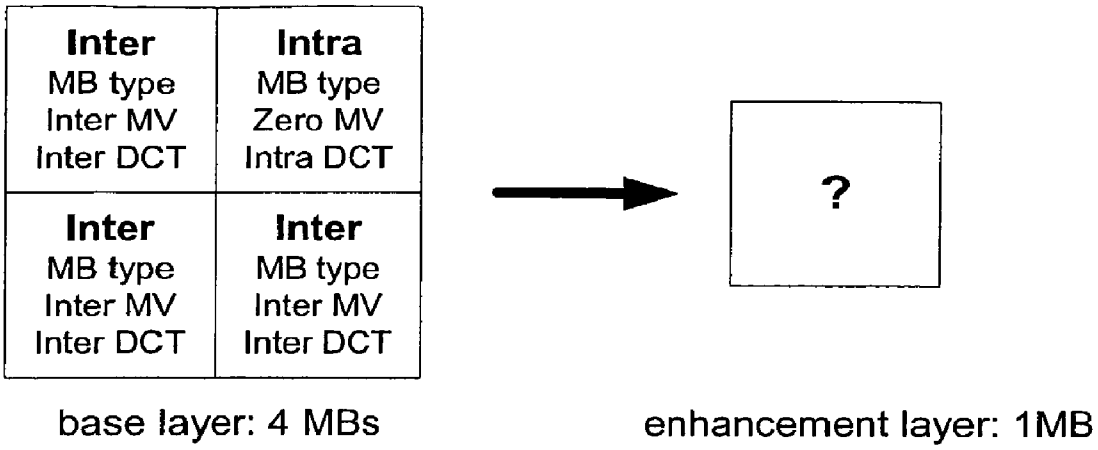
Inter
MB type
Inter MV
Inter DCT
Intra
MB type
Zero MV
Intra DCT
Inter
MB type
Inter MV
Inter DCT
Inter
MB type
Inter MV
Inter DCT
?
base layer: 4 MBs
enhancement layer: 1MB

FIG. 3

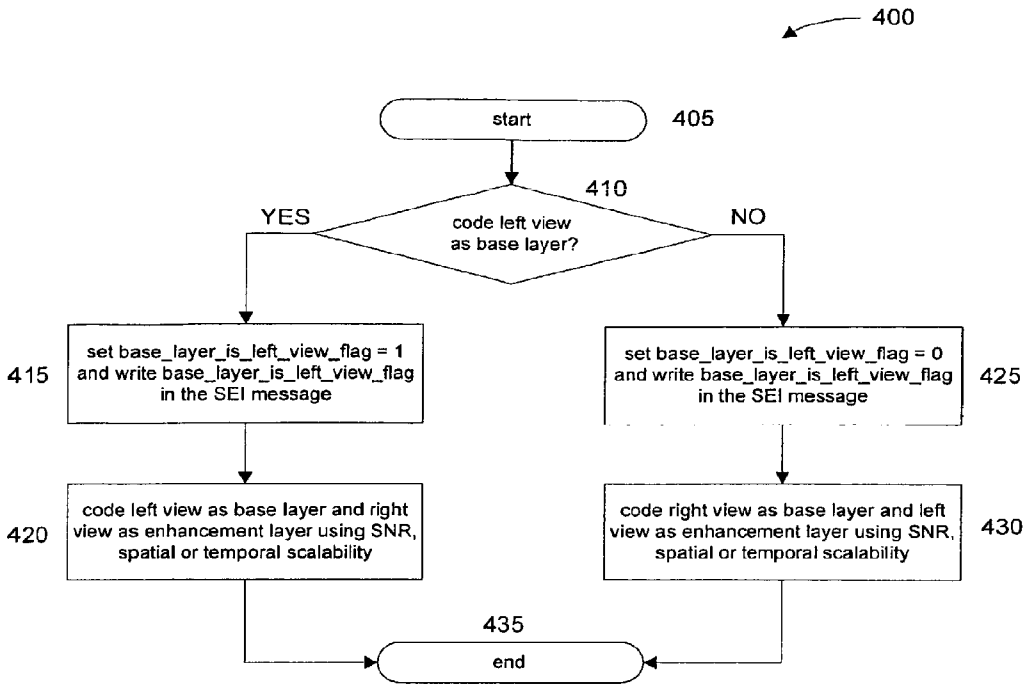
400
start
405
410
YES
code left view as base layer?
NO
415
set base_layer_is_left_view_flag = 1 and write base_layer_is_left_view_flag in the SEI message
set base_layer_is_left_view_flag = 0 and write base_layer_is_left_view_flag in the SEI message
425
420
code left view as base layer and right view as enhancement layer using SNR, spatial or temporal scalability
code right view as base layer and left view as enhancement layer using SNR, spatial or temporal scalability
430
435
end

FIG. 4

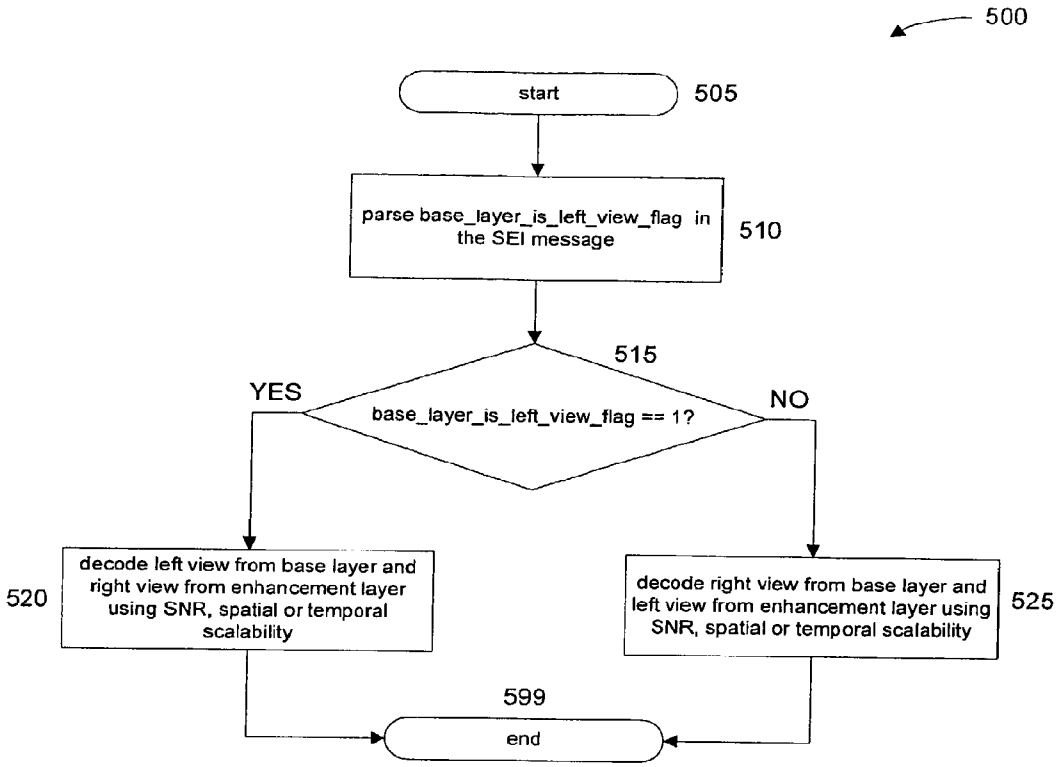
500
start
505
parse base_layer_is_left_view_flag in the SEI message
510
515
YES
base_layer_is_left_view_flag == 1?
NO
decode left view from base layer and right view from enhancement layer using SNR, spatial or temporal scalability
520
decode right view from base layer and left view from enhancement layer using SNR, spatial or temporal scalability
525
599
end

FIG. 5

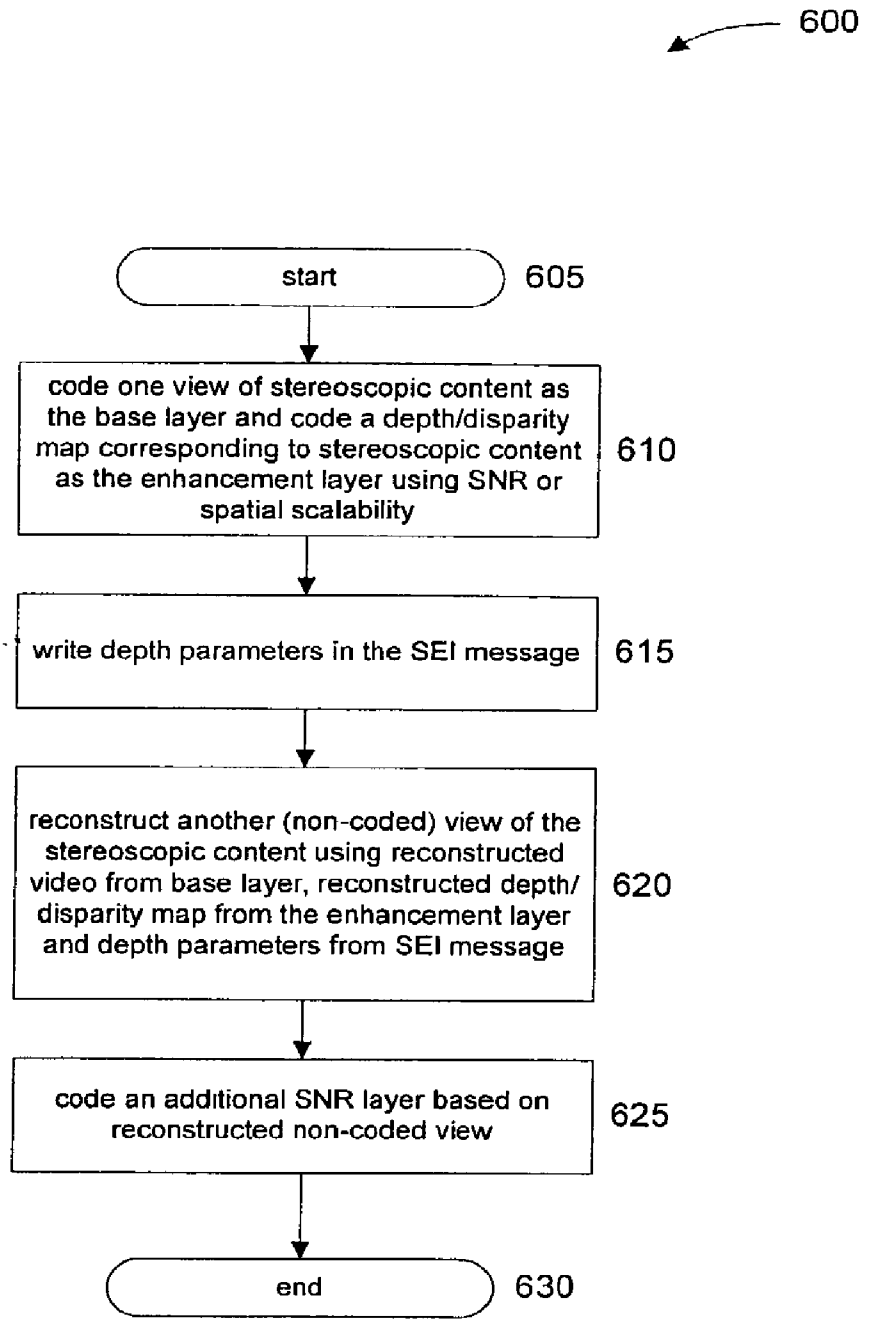
600
start
605
code one view of stereoscopic content as the base layer and code a depth/disparity map corresponding to stereoscopic content as the enhancement layer using SNR or spatial scalability
610
write depth parameters in the SEI message
615
reconstruct another (non-coded) view of the stereoscopic content using reconstructed video from base layer, reconstructed depth/ disparity map from the enhancement layer and depth parameters from SEI message
620
code an additional SNR layer based on reconstructed non-coded view
625
end
630

FIG. 6

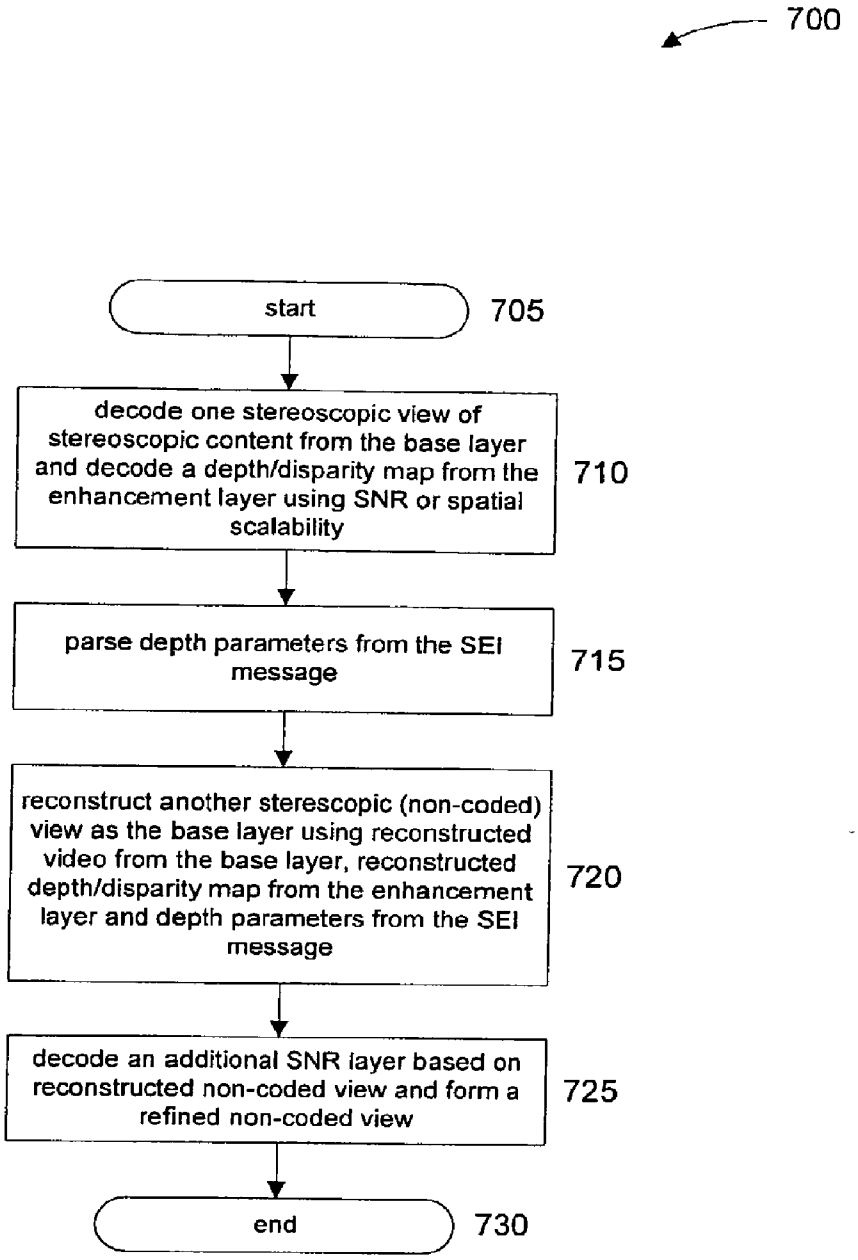
700
start
705
decode one stereoscopic view of stereoscopic content from the base layer and decode a depth/disparity map from the enhancement layer using SNR or spatial scalability
710
parse depth parameters from the SEI message
715
reconstruct another sterescopic (non-coded) view as the base layer using reconstructed video from the base layer, reconstructed depth/disparity map from the enhancement layer and depth parameters from the SEI message
720
decode an additional SNR layer based on reconstructed non-coded view and form a refined non-coded view
725
end
730

FIG. 7

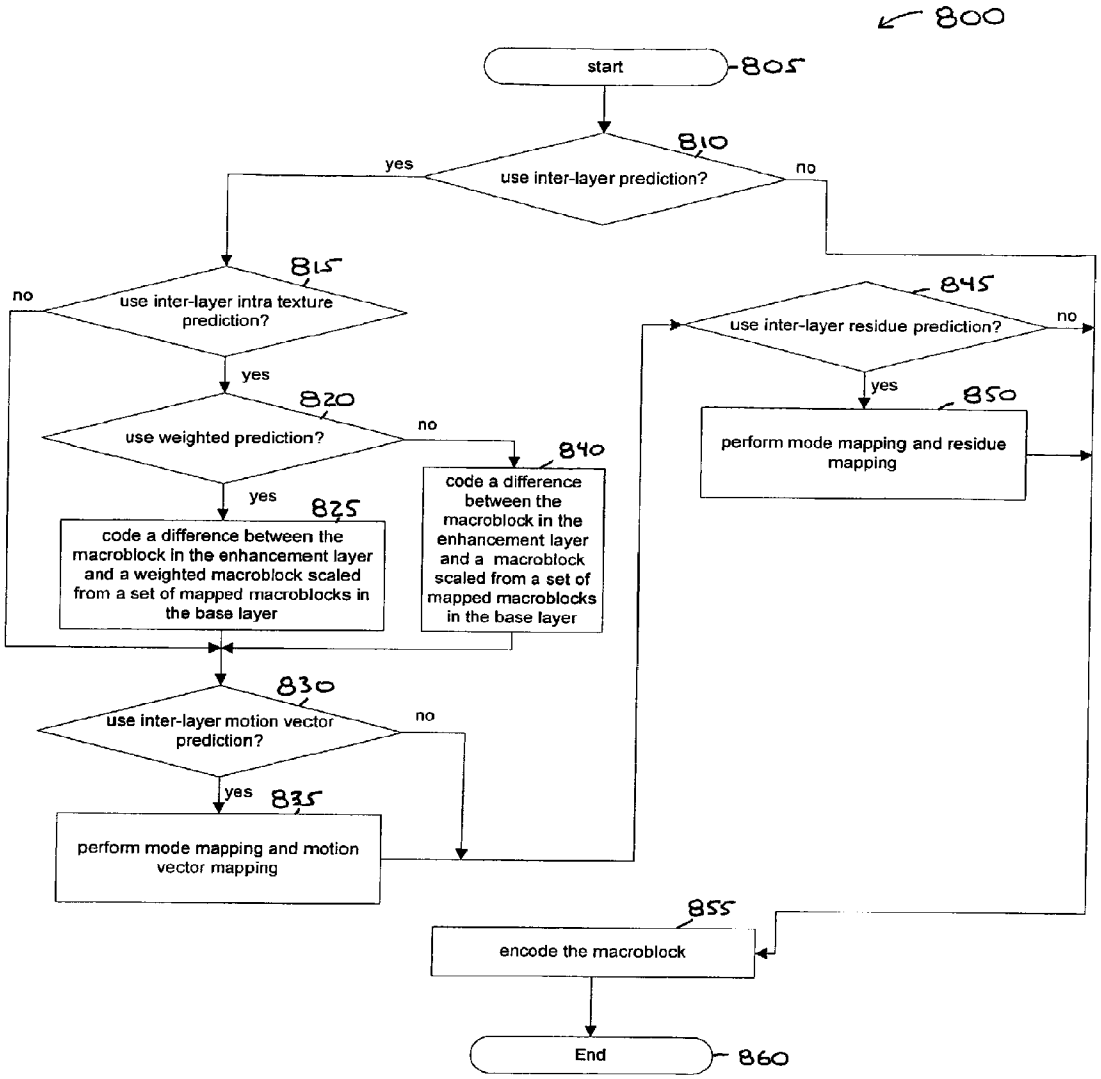
800
start
805
810
use inter-layer prediction?
yes
no
815
use inter-layer intra texture prediction?
no
yes
820
use weighted prediction?
no
yes
825
code a difference between the macroblock in the enhancement layer and a weighted macroblock scaled from a set of mapped macroblocks in the base layer
840
code a difference between the macroblock in the enhancement layer and a macroblock scaled from a set of mapped macroblocks in the base layer
830
use inter-layer motion vector prediction?
no
yes
835
perform mode mapping and motion vector mapping
845
use inter-layer residue prediction?
no
yes
850
perform mode mapping and residue mapping
855
encode the macroblock
End
860

FIG. 8

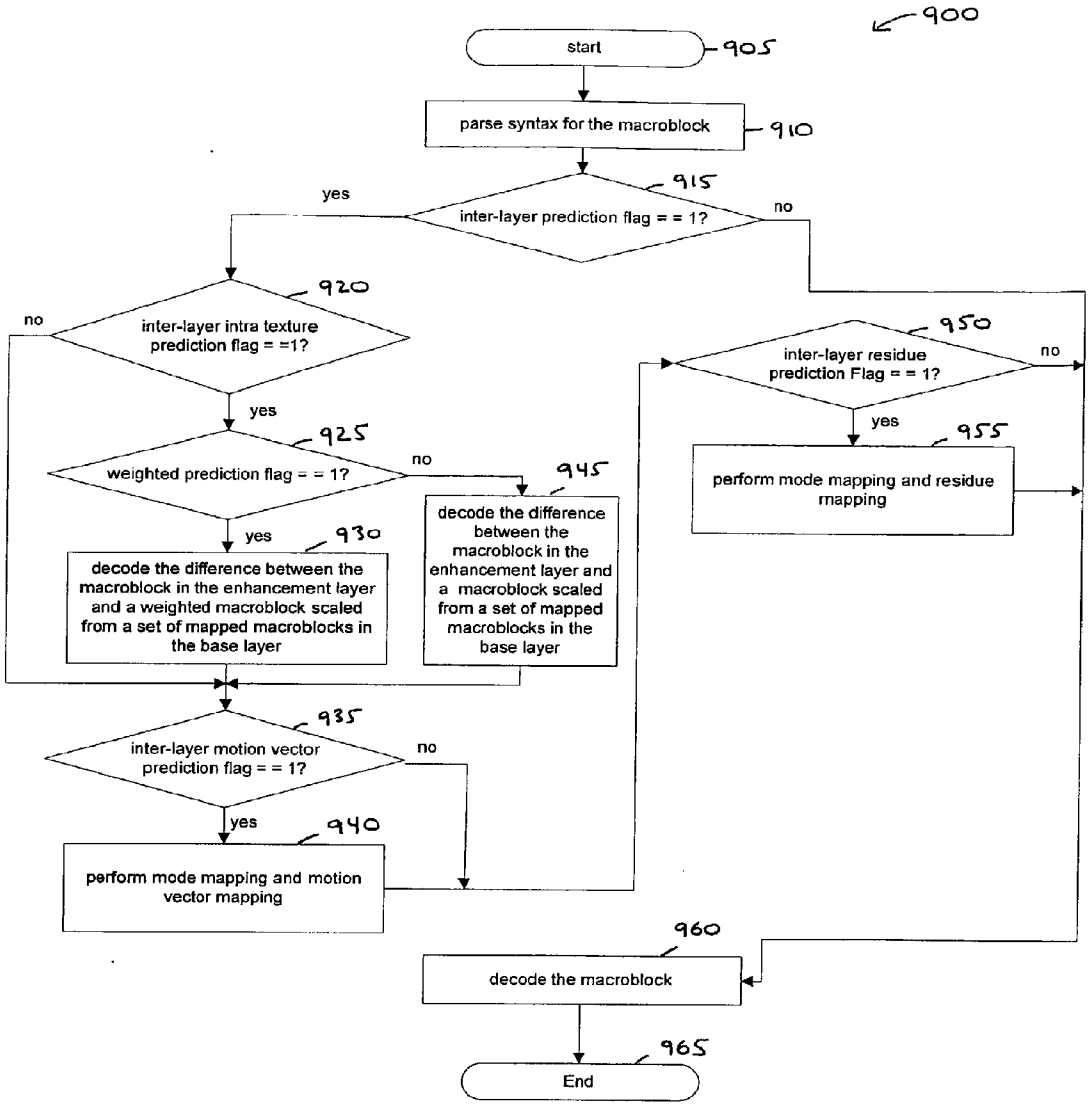
900
start
905
parse syntax for the macroblock
910
inter-layer prediction flag = = 1?
915
yes
no
inter-layer intra texture prediction flag = =1?
920
no
yes
weighted prediction flag = = 1?
925
no
yes
decode the difference between the macroblock in the enhancement layer and a weighted macroblock scaled from a set of mapped macroblocks in the base layer
930
decode the difference between the macroblock in the enhancement layer and a macroblock scaled from a set of mapped macroblocks in the base layer
945
inter-layer motion vector prediction flag = = 1?
935
no
yes
perform mode mapping and motion vector mapping
940
inter-layer residue prediction Flag = = 1?
950
no
yes
perform mode mapping and residue mapping
955
decode the macroblock
960
End
965

FIG. 9

# MULTI-VIEW VIDEO CODING USING SCALABLE VIDEO CODING

## CROSS-REFERENCE TO RELATED APPLICATIONS

**[0001]** This application claims the benefit of U.S. Provisional Application Ser. No. 60/728,141, filed Oct. 19, 2005 and entitled "METHOD AND APPARATUS FOR STEREOSCOPIC VIDEO USING SCALABLE VIDEO CODEC," which is incorporated by reference herein in its entirety.

## FIELD OF THE INVENTION

**[0002]** The present invention generally relates to video encoding and decoding and, more particularly, to a method and apparatus for Multi-view Video Coding (MVC) using scalable video coding.

## BACKGROUND OF THE INVENTION

**[0003]** Stereoscopic video, also referred to as three dimensional (3-D) video, creates the illusion of depth for displayed images. One method for creating depth perception is to display two different two dimensional (2-D) images, where each image represents two perspectives of the same object, similar to the perspectives that both eyes naturally receive in binocular vision.

**[0004]** With the arrival of many high-quality stereoscopic displays in the market, it is desirable to provide a compression solution for stereoscopic video with superior coding efficiency and with reasonable coding complexity.

**[0005]** In recent years, much effort has been put in the design of efficient methods for compressing stereoscopic video. Conventional monoscopic compression methods can be applied independently to the left and right views of a stereo image pair. However, higher compression ratios can be achieved if the high correlation between views is exploited.

**[0006]** Regarding a prior art approach in which both views of a stereoscopic image pair are encoded, a Multi-View Profile (MVP) was defined in the International Organization for Standardization/International Electrotechnical Commission (ISO/IEC) Moving Picture Experts Group-2 (MPEG-2) standard to transmit a pair of video signals. MVP relies on a multi-layer signal representation approach such that one view (often the left view) is assigned to a base layer, and the other view is assigned to an enhancement layer. Monoscopic coding with the same tools as Main Profile (MP) is applied to the base layer. The enhancement layer is coded using temporal scalability tools and a hybrid prediction of motion and disparity fields.

**[0007]** In prior art methods relating to the International Organization for Standardization/International Electrotechnical Commission (ISO/IEC) Moving Picture Experts Group-4 (MPEG-4) Part 10 Advanced Video Coding (AVC) standard/International Telecommunication Union, Telecommunication Sector (ITU-T) H.264 standard (hereinafter the "MPEG4/H.264 standard" or simply the "H.264 standard"), stereoscopic video coding can be performed in two different ways: (i) as a particular case of interlaced image coding, where all the fields of a particular parity are assigned to the left view and all the fields of the opposite parity are considered the right view of the stereo-view content; or alternatively (ii) by alternating frames from the left and rights views to create a single monoscopic video sequence. A stereovision supplemental enhancement information (SEI) message provides an indication to the decoder of whether or not the coded video sequence represents stereoscopic content and which method was used to encode the corresponding content.

**[0008]** These previously known methods require minimum modifications of existing monoscopic coding techniques. However, they show a limited ability for reducing the redundancy existing between the two views in a stereoscopic pair. As a result, the encoding of stereo-view results in a large overhead when compared to the encoding of a single monoscopic view. This problem has prevented the spread of stereovision for consumer applications with limited transmission bandwidth.

**[0009]** Other prior art methods include methods in which encoding is performed for one view plus some "additional 3-D information". This more general and simple approach to code stereoscopic content is to encode one single view plus some additional 3-D information allowing the receiver to render the second view of the stereoscopic pair. Traditionally, the transmitted 3-D information is represented by a depth and/or parity map. A depth map includes a 2-D image representation of the 3-D scene for which each pixel is assigned a depth value. Differences in pixel values correspond to differences in depth in the 3D scene. Often, depth data is encoded as a luminance channel only video stream.

**[0010]** In MPEG-4 Part 2, video object syntax includes so-called multiple auxiliary components (MAC), which are coded as gray-level images using motion-compensated DCT. Motion vectors of a video object will be used for the motion compensation of its auxiliary components. One utility of auxiliary components is to code depth or disparity map data. However, there is a restriction that auxiliary components must have the same size as the luminance component of the video object. The previous method shows an improved performance compared to MPEG-2 MVP. However, the MPEG-4 Part 2 standard has not been successfully deployed in the industry because of the superior coding gains of MPEG-4 part **10** and the high complexity of the proposed object oriented coding methods.

## SUMMARY OF THE INVENTION

**[0011]** These and other drawbacks and disadvantages of the prior art are addressed by the present invention, which is directed to a method and apparatus for Multi-view Video Coding (MVC) using scalable video coding.

**[0012]** According to an aspect of the present principles, there is provided a scalable video encoder. The scalable video encoder includes an encoder for encoding at least two views corresponding to multi-view video content by, encoding a particular view of the at least two views as a base layer, and encoding each of at least one other view of the at least two views as an enhancement layer using a prediction from a lower layer corresponding to at least one of the particular view and the at least one other view. The at least two views are encoded based on a selection from among at least two of temporal, spatial, and signal to noise ratio scalability techniques.

**[0013]** According to another aspect of the present principles, there is provided a method for scalable video encoding. The method includes encoding at least two views corresponding to multi-view video content by, encoding a particular view of the at least two views as a base layer, and encoding each of at least one other view of the at least two views as an enhancement layer using a prediction from a lower layer corresponding to at least one of the particular

view and the at least one other view. The at least two views are encoded based on a selection from among at least two of temporal, spatial, and signal to noise ratio scalability techniques.

**[0014]** According to yet another aspect of the present principles, there is provided a scalable video decoder for scalable video decoding. The scalable video decoder includes a decoder for decoding at least two views corresponding to multi-view video content by, decoding a particular view of the at least two views as a base layer, and decoding each of at least one other view of the at least two views as an enhancement layer using a prediction from a lower layer corresponding to at least one of the particular view and the at least one other view. The at least two views are decoded based on a selection from among at least two of temporal, spatial, and signal to noise ratio scalability techniques.

**[0015]** According to still another aspect of the present principles, there is provided a method for scalable video decoding. The method includes decoding at least two views corresponding to multi-view video content by, decoding a particular view of the at least two views as a base layer, and decoding each of at least one other view of the at least two views as an enhancement layer using a prediction from a lower layer corresponding to at least one of the particular view and the at least one other view. The at least two views are decoded based on a selection from among at least two of temporal, spatial, and signal to noise ratio scalability techniques.

**[0016]** According to a further aspect of the present principles, there is provided a video signal structure for scalable video encoding. The video signal structure includes a particular view of at least two views encoded as a base layer, and at least one other view of the at least two views encoded as an enhancement layer using a prediction from a lower layer corresponding to at least one of the particular view and the at least one other view. The at least two views correspond to multi-view video content and are encoded based on a selection from among at least two of temporal, spatial, and SNR scalability techniques.

**[0017]** According to a still further aspect of the present principles, there is provided a storage media having scalable video signal data encoded thereupon. The scalable video signal data includes a particular view of at least two views encoded as a base layer, and at least one other view of the at least two views encoded as an enhancement layer using a prediction from a lower layer corresponding to at least one of the particular view and the at least one other view. The at least two views correspond to multi-view video content and are encoded based on a selection from among at least two of temporal, spatial, and SNR scalability techniques.

**[0018]** According to an additional aspect of the present principles, there is provided a scalable video encoder. The scalable video encoder includes an encoder for encoding a first stereoscopic view as a base layer, and encoding at least one of a depth map and a disparity map as an enhancement layer using a prediction from the first stereoscopic view. The first stereoscopic view and the at least one of the depth map and the disparity map each correspond to a particular stereoscopic content and are encoded based on a selection from among at least two of temporal, spatial, and SNR scalability techniques.

**[0019]** According to another aspect of the present principles, there is provided a method for scalable video encoding. The method includes encoding a first stereoscopic view as a base layer, encoding at least one of a depth map and a disparity map as an enhancement layer using a prediction from the first stereoscopic view. The first stereoscopic view and the at least one of the depth map and the disparity map each correspond to a particular stereoscopic content and are encoded based on a selection from among at least two of temporal, spatial, and SNR scalability techniques.

**[0020]** According to yet another aspect of the present principles, there is provided a scalable video decoder. The scalable video decoder includes a decoder for decoding a first stereoscopic view from a base layer, and decoding at least one of a depth map and a disparity map from an enhancement layer using a prediction from the first stereoscopic view. The first stereoscopic view and the at least one of the depth map and the disparity map each correspond to a particular stereoscopic content and are decoded based on a selection from among at least two of temporal, spatial, and SNR scalability techniques.

**[0021]** According to still another aspect of the present principles, there is provided a method for scalable video decoding. The method includes decoding a first stereoscopic view from a base layer, and decoding at least one of a depth map and a disparity map from an enhancement layer using a prediction from the first stereoscopic view. The first stereoscopic view and the at least one of the depth map and the disparity map each correspond to a particular stereoscopic content and are decoded based on a selection from among at least two of temporal, spatial, and SNR scalability techniques.

**[0022]** According to a still further aspect of the present principles, there is provided a video signal structure for scalable video encoding. The video signal structure includes a first stereoscopic view encoded as a base layer, and at least one of a depth map and a disparity map encoded as enhancement layer to allow a prediction from the first stereoscopic view. The first stereoscopic view and the at least one of the depth map and the disparity map each correspond to a particular stereoscopic content and are encoded based on a selection from among at least two of temporal, spatial, and SNR scalability techniques.

**[0023]** According to an additional aspect of the present principles, there is provided a storage media having scalable video signal data encoded thereupon. The scalable video signal data includes a first stereoscopic view encoded as a base layer, and at least one of a depth map and a disparity map encoded as enhancement layer to allow a prediction from the first stereoscopic view. The first stereoscopic view and the at least one of the depth map and the disparity map each correspond to a particular stereoscopic content and are encoded based on a selection from among at least two of temporal, spatial, and SNR scalability techniques.

**[0024]** These and other aspects, features and advantages of the present invention will become apparent from the following detailed description of exemplary embodiments, which is to be read in connection with the accompanying drawings.

## BRIEF DESCRIPTION OF THE DRAWINGS

**[0025]** The present invention may be better understood in accordance with the following exemplary figures, in which:

**[0026]** FIG. **1** shows a block diagram for an exemplary Joint Scalable Video Model (JSVM) 3.0 encoder to which the present principles may be applied;

**[0027]** FIG. **2** shows a block diagram for an exemplary decoder to which the present principles may be applied;

**[0028]** FIG. **3** is a diagram for an exemplary macroblock mapping for inter-layer prediction in SVC spatial scalability for a scaling factor equal to ½ for each dimension;

**[0029]** FIG. **4** is a diagram for a method for scalable video encoding capable of encoding a pair of stereoscopic views of stereoscopic content in accordance with an exemplary first embodiment of the present principles;

**[0030]** FIG. **5** is a diagram for a method for scalable video decoding capable of decoding a pair of stereoscopic views of stereoscopic content in accordance with the exemplary first embodiment of the present principles;

**[0031]** FIG. **6** is a diagram for a method for scalable video encoding capable of encoding a pair of stereoscopic views of stereoscopic content in accordance with an exemplary second embodiment of the present principles;

**[0032]** FIG. **7** is a diagram for a method for scalable video decoding capable of decoding a pair of stereoscopic views of stereoscopic content in accordance with the exemplary second embodiment of the present principles;

**[0033]** FIG. **8** is a scalable video coding method for encoding a macroblock in an enhancement layer in accordance with an exemplary embodiment of the present principles; and

**[0034]** FIG. **9** is a scalable video decoding method for decoding a macroblock in an enhancement layer in accordance with an exemplary embodiment of the present principles.

## DETAILED DESCRIPTION

**[0035]** The present invention is directed to a method and apparatus for Multi-view Video Coding (MVC) using scalable video coding. For illustrative purposes, the exemplary embodiments of the present invention are described with respect to stereoscopic (two-view) video content. However, given the teachings of the present principles provided herein, one of ordinary skill in this and related arts will be able to readily extend the present principles to multi-view video content, corresponding to two or more views, while maintaining the scope of the present invention.

**[0036]** The present description illustrates the principles of the present invention. It will thus be appreciated that those skilled in the art will be able to devise various arrangements that, although not explicitly described or shown herein, embody the principles of the invention and are included within its spirit and scope.

**[0037]** All examples and conditional language recited herein are intended for pedagogical purposes to aid the reader in understanding the principles of the invention and the concepts contributed by the inventor to furthering the art, and are to be construed as being without limitation to such specifically recited examples and conditions.

**[0038]** Moreover, all statements herein reciting principles, aspects, and embodiments of the invention, as well as specific examples thereof, are intended to encompass both structural and functional equivalents thereof. Additionally, it is intended that such equivalents include both currently known equivalents as well as equivalents developed in the future, i.e., any elements developed that perform the same function, regardless of structure.

**[0039]** Thus, for example, it will be appreciated by those skilled in the art that the block diagrams presented herein represent conceptual views of illustrative circuitry embodying the principles of the invention. Similarly, it will be appreciated that any flow charts, flow diagrams, state transition diagrams, pseudocode, and the like represent various processes which may be substantially represented in computer readable media and so executed by a computer or processor, whether or not such computer or processor is explicitly shown.

**[0040]** The functions of the various elements shown in the figures may be provided through the use of dedicated hardware as well as hardware capable of executing software in association with appropriate software. When provided by a processor, the functions may be provided by a single dedicated processor, by a single shared processor, or by a plurality of individual processors, some of which may be shared. Moreover, explicit use of the term "processor" or "controller" should not be construed to refer exclusively to hardware capable of executing software, and may implicitly include, without limitation, digital signal processor ("DSP") hardware, read-only memory ("ROM") for storing software, random access memory ("RAM"), and non-volatile storage.

**[0041]** Other hardware, conventional and/or custom, may also be included. Similarly, any switches shown in the figures are conceptual only. Their function may be carried out through the operation of program logic, through dedicated logic, through the interaction of program control and dedicated logic, or even manually, the particular technique being selectable by the implementer as more specifically understood from the context.

**[0042]** In the claims hereof, any element expressed as a means for performing a specified function is intended to encompass any way of performing that function including, for example, a) a combination of circuit elements that performs that function or b) software in any form, including, therefore, firmware, microcode or the like, combined with appropriate circuitry for executing that software to perform the function. The invention as defined by such claims resides in the fact that the functionalities provided by the various recited means are combined and brought together in the manner which the claims call for. It is thus regarded that any means that can provide those functionalities are equivalent to those shown herein.

**[0043]** Turning to FIG. **1**, an exemplary Joint Scalable Video Model Version 3.0 (hereinafter "JSVM3.0") encoder to which the present invention may be applied is indicated generally by the reference numeral **100**. The JSVM3.0 encoder **100** uses three spatial layers and motion compensated temporal filtering. The JSVM encoder **100** includes a two-dimensional (2D) decimator **104**, a 2D decimator **106**, and a motion compensated temporal filtering (MCTF) module **108**, each having an input for receiving video signal data **102**.

**[0044]** An output of the 2D decimator **106** is connected in signal communication with an input of a MCTF module **110**. A first output of the MCTF module **110** is connected in signal communication with an input of a motion coder **112**, and a second output of the MCTF module **110** is connected in signal communication with an input of a prediction module **116**. A first output of the motion coder **112** is connected in signal communication with a first input of a multiplexer **114**. A second output of the motion coder **112** is connected in signal communication with a first input of a motion coder **124**. A first output of the prediction module **116** is connected in signal communication with an input of a spatial transformer **118**. An output of the spatial transformer **118** is connected in signal communication with a second input of the multiplexer **114**. A second output of the prediction module **116** is connected in signal communication with an input of an interpolator **120**. An output of the interpolator is connected in signal

communication with a first input of a prediction module **122**. A first output of the prediction module **122** is connected in signal communication with an input of a spatial transformer **126**. An output of the spatial transformer **126** is connected in signal communication with the second input of the multiplexer **114**. A second output of the prediction module **122** is connected in signal communication with an input of an interpolator **130**. An output of the interpolator **130** is connected in signal communication with a first input of a prediction module **134**. An output of the prediction module **134** is connected in signal communication with a spatial transformer **136**. An output of the spatial transformer is connected in signal communication with the second input of a multiplexer **114**.

**[0045]** An output of the 2D decimator **104** is connected in signal communication with an input of a MCTF module **128**. A first output of the MCTF module **128** is connected in signal communication with a second input of the motion coder **124**. A first output of the motion coder **124** is connected in signal communication with the first input of the multiplexer **114**. A second output of the motion coder **124** is connected in signal communication with a first input of a motion coder **132**. A second output of the MCTF module **128** is connected in signal communication with a second input of the prediction module **122**.

**[0046]** A first output of the MCTF module **108** is connected in signal communication with a second input of the motion coder **132**. An output of the motion coder **132** is connected in signal communication with the first input of the multiplexer **114**. A second output of the MCTF module **108** is connected in signal communication with a second input of the prediction module **134**. An output of the multiplexer **114** provides an output bitstream **138**.

**[0047]** For each spatial layer, a motion compensated temporal decomposition is performed. This decomposition provides temporal scalability. Motion information from lower spatial layers can be used for prediction of motion on the higher layers. For texture encoding, spatial prediction between successive spatial layers can be applied to remove redundancy. The residual signal resulting from intra prediction or motion compensated inter prediction is transform coded. A quality base layer residual provides minimum reconstruction quality at each spatial layer. This quality base layer can be encoded into an H.264 standard compliant stream if no inter-layer prediction is applied. For quality scalability, quality enhancement layers are additionally encoded. These enhancement layers can be chosen to either provide coarse or fine grain quality (SNR) scalability.

**[0048]** Turning to FIG. **2**, an exemplary scalable video decoder to which the present invention may be applied is indicated generally by the reference numeral **200**. An input of a demultiplexer **202** is available as an input to the scalable video decoder **200**, for receiving a scalable bitstream. A first output of the demultiplexer **202** is connected in signal communication with an input of a spatial inverse transform SNR scalable entropy decoder **204**. A first output of the spatial inverse transform SNR scalable entropy decoder **204** is connected in signal communication with a first input of a prediction module **206**. An output of the prediction module **206** is connected in signal communication with a first input of an inverse MCTF module **208**.

**[0049]** A second output of the spatial inverse transform SNR scalable entropy decoder **204** is connected in signal communication with a first input of a motion vector (MV) decoder **210**. An output of the MV decoder **210** is connected in signal communication with a second input of the inverse MCTF module **208**.

**[0050]** A second output of the demultiplexer **202** is connected in signal communication with an input of a spatial inverse transform SNR scalable entropy decoder **212**. A first output of the spatial inverse transform SNR scalable entropy decoder **212** is connected in signal communication with a first input of a prediction module **214**. A first output of the prediction module **214** is connected in signal communication with an input of an interpolation module **216**. An output of the interpolation module **216** is connected in signal communication with a second input of the prediction module **206**. A second output of the prediction module **214** is connected in signal communication with a first input of an inverse MCTF module **218**.

**[0051]** A second output of the spatial inverse transform SNR scalable entropy decoder **212** is connected in signal communication with a first input of an MV decoder **220**. A first output of the MV decoder **220** is connected in signal communication with a second input of the MV decoder **210**. A second output of the MV decoder **220** is connected in signal communication with a second input of the inverse MCTF module **218**.

**[0052]** A third output of the demultiplexer **202** is connected in signal communication with an input of a spatial inverse transform SNR scalable entropy decoder **222**. A first output of the spatial inverse transform SNR scalable entropy decoder **222** is connected in signal communication with an input of a prediction module **224**. A first output of the prediction module **224** is connected in signal communication with an input of an interpolation module **226**. An output of the interpolation module **226** is connected in signal communication with a second input of the prediction module **214**.

**[0053]** A second output of the prediction module **224** is connected in signal communication with a first input of an inverse MCTF module **228**. A second output of the spatial inverse transform SNR scalable entropy decoder **222** is connected in signal communication with an input of an MV decoder **230**. A first output of the MV decoder **230** is connected in signal communication with a second input of the MV decoder **220**. A second output of the MV decoder **230** is connected in signal communication with a second input of the inverse MCTF module **228**.

**[0054]** An output of the inverse MCTF module **228** is available as an output of the decoder **200**, for outputting a layer **0** signal. An output of the inverse MCTF module **218** is available as an output of the decoder **200**, for outputting a layer **1** signal. An output of the inverse MCTF module **208** is available as an output of the decoder **200**, for outputting a layer **2** signal.

**[0055]** For spatial, temporal and SNR scalability, a large degree of inter-layer prediction is incorporated. Intra and inter macroblocks can be predicted using the corresponding signals of previous layers. Moreover, the motion description of each layer can be used for a prediction of the motion description for following enhancement layers. These techniques fall into three categories: inter-layer intra texture prediction, inter-layer motion prediction and inter-layer residue prediction.

**[0056]** In accordance with the present principles, we disclose two exemplary embodiments for encoding stereoscopic video that are capable of being used with Scalable Video Coding (herein after also referred to as "H.264 SVC" or

simply "SVC") that is currently being developed as an amendment to the H.264 standard. According to the first method, stereoscopic content is encoded in SVC as a view pair (left and right views, or alternatively, a first and second stereoscopic view). According to the second method, stereoscopic content is encoded in SVC as one view plus depth/parity maps. For each method of the two exemplary embodiments, a new message, indicator, or the like (for example, a Supplemental Enhancement Information (SEI) message) is used to indicate the SVC bitstream is used for stereoscopic video coding.

**[0057]** It is to be appreciated that while embodiments of the present principles are described herein with respect to H.264 SVC, those skilled in this and related arts will realize that the present principles are not so limited and may be readily applied to other video coding standards as well (including, e.g., but not limited to various MPEG standards, including MPEG-2) while maintaining the scope of the present principles.

**[0058]** In accordance with the first exemplary embodiment, coding both views of a stereoscopic image pair in a scalable video coding scheme is performed by coding one view as base layer, and coding the second view in an enhancement layer. A major difference between the present principles and MPEG-2 MVP scheme is that the present principles do not require the two views to be coded using only temporal scalability. Therefore, in accordance with the present principles, the stereoscopic views may be coded (and therefore later decoded) as temporal, spatial, or SNR scalability, depending on the demands and efficiencies available for a specific application requirement. For example, temporal scalability is more suitable when we need the most coding efficiency. Spatial/SNR scalability are more suitable when a corresponding application can benefit from different spatial resolution/quality between two views.

**[0059]** In order to support a non-stereo display to be able to decode the video without decoding the enhancement layer and to allow another view to have different resolutions, for spatial scalability applications we propose to use a scaling factor less than, or equal to, 1 in one exemplary aspect of the first exemplary embodiment.

**[0060]** Illumination and color discrepancies across different camera views are common in captured stereoscopic videos. Possible causes of such undesired discrepancies include, but are not limited to, poor camera calibration, different light projection direction and different surface reflection characteristic. Weighted Prediction (WP) originally developed in the H.264 standard is an effective tool to compensate for illumination/color differences when texture prediction between two views is involved. WP is supported in SVC, but it only allows for the same layer or temporal scalability. Therefore, in accordance with one exemplary implementation of the first exemplary embodiment, since we code one view in the base layer and a second view in the enhancement layer in the first exemplary embodiment, for temporal scalability, we can simply enable WP in SVC to provide a benefit in coding efficiency for cross view prediction. For spatial or SNR scalability, we propose to add WP support for Intra_BL mode, i.e., coding the difference between the macroblock in the enhancement layer and the weighted macroblock in the base layer.

**[0061]** A new supplemental enhancement information (SEI) message is provided that supports the exemplary first embodiment described herein and specifies which view corresponds to the base layer. The SEI message is shown in Table 1. For example, when base_layer_is_left_view_flag is equal to 1, this indicates that the left view is coded in the base layer. Conversely, when base_layer_is_left_view_flag is equal to 0, this indicates that the right view is coded in the base layer.

TABLE 1

| svc_stereo_video_info( payloadSize ) { | C | Descriptor |
|---|---|---|
| base_layer_is_left_view_flag | 5 | u(1) |
| } | | |

**[0062]** It is to be noted that since this metadata is not required by the decoding process, the metadata could be transmitted out of band according to a different syntax specification.

**[0063]** In accordance with the second exemplary embodiment, one view is coded and a depth and/or disparity map in used in the enhancement layer to support a conventional non-stereo display to be able to decode the video without decoding the depth maps. We can apply spatial, or SNR scalability, depending on the application requirement. Since the depth map can be coded at a lower resolution, in spatial scalability, one possible preferred embodiment uses a scaling factor less than, or equal to, 1.

**[0064]** A new SEI message is provided that supports the second exemplary embodiment and that provides additional 3-D metadata that is conveyed to assist the rendering process of the non-transmitted view. In a particular embodiment, the transmitted metadata may include two parameters (Nknear, Nkfar) as shown in Table 2. With these two parameters and the depth map, the correct pixel parallax can be calculated and will result in the intended depth effect on the display as seen by the viewer.

**[0065]** Nknear specifies the knear ratio parameter normalized to 128 that shall be applied to calculate the screen parallel of a newly rendered view.

**[0066]** Nkfar specifies the kfar ratio parameter normalized to 32 that shall be applied to calculate the screen parallel of a newly rendered view.

TABLE 2

| depth_map_descriptor( payloadSize ) { | C | Descriptor |
|---|---|---|
| Nknear | 5 | u(8) |
| Nkfar | 5 | u(8) |
| } | | |

**[0067]** It is to be noted that since this metadata is not required by the decoding process, the metadata could be transmitted out of band according to a different syntax specification.

**[0068]** One major problem of using a depth map and one coded view (e.g., the left view) to construct the other non-transmitted view (e.g., the right view) is that areas which are occluded in the left view might be visible in the right view. This might create holes in the right view. Another problem is that because the left view and the depth map are lossy coded, errors may exist between the reconstructed right view and the original right view. To improve the quality of the non-transmitted view, an additional SNR layer can be added. The additional SNR layer should be combined with the SEI message, so the decoder will know that the refinement is based on the reconstructed non-coded view.

**[0069]** It should be noted that currently in SVC (which uses Joint Scalable Video Model 3 (JSVM3)), spatial scalability only handles resolution scaling larger than or equal to one. In accordance with the present invention, inter-layer prediction is used to support resolution scaling less than one.

**[0070]** For inter-lay prediction, the following issues should be addresses to handle spatial scalability for resolution scaling less than one: (1) mixed-block processing; (2) macroblock type mapping; (3) motion vector scaling; 4) texture scaling. New and/or prior techniques, including those relating to spatial resolution transcoding, may be used to address these issues.

**[0071]** For simplicity, we may allow SVC to only support the scaling factor to be 2^(−n), where n>0. Turning to FIG. **3**, an exemplary macroblock mapping for inter-layer prediction in SVC spatial scalability for a scaling factor equal to ½ for each dimension is indicated generally by the reference numeral **300**. In such an example, one macroblock in the enhancement layer corresponds to four macroblocks in the base layer. Since those four macroblocks may have different intra/inter modes and SVC does not allow mixing modes in one macroblock, we need to decide what mode should be used for the macroblock in the enhancement layer in inter-layer prediction. We propose to force the macroblock to be inter mode, and assume the motion vectors (MVs) and discrete cosine transform (DCT) residues in intra-macroblock to be zero. For macroblock type mapping, since the smallest partition in SVC is 4×4, but the downscaling by 2 can result in a partition as small as 2×2, we propose to group each four 2×2 partitions into one 4×4 partition. The MV for each 4×4 partition is set to the MV of the corner of the corresponding 8×8 sub-macroblock. For the reference picture index, we group each four 4×4 partitions into one 8×8 partition. The reference picture index is assigned to that of the corner of the associated macroblock. For motion vector scaling, MVE=(MVB+1) >>1, where MVE is the enhancement layer motion vector, and MVB is the corresponding base layer motion vector. For texture downscaling involving the residue, we can use the simple average method. For spatial texture, we can use the simple average method or the MPEG-4 downscaling function currently used in JSVM. For the scaling factor of 2^(−n), we can iteratively scale by ½ (n times).

**[0072]** It is to be appreciated that as used herein, the term "depth/disparity map" is contemplated to refer to one or more depth maps and/or one or more disparity maps.

**[0073]** FIGS. **4** and **5** correspond to the first exemplary embodiment of the present principles.

**[0074]** Turning to FIG. **4**, a method for scalable video encoding capable of encoding a pair of stereoscopic views of stereoscopic content is indicated generally by the reference numeral **400**. The method **400** includes a start block **405** that passes control to a decision block **410**. The decision block **410** determines whether or not to code a left view of the stereoscopic content as a base layer. If so, then control is passed to a function block **415**. Otherwise, control is passed to a function block **425**.

**[0075]** The function block **415** sets a base_layer_is_left_view_flag equal to one, writes the base_layer_is_left_view_flag in a supplemental enhancement information (SEI) message, and passes control to a function block **420**. The function block **420** codes the left view as the base layer and the right view as an enhancement layer, and passes control to an end block **435**.

**[0076]** The function block **425** sets the _base_layer_is_left_view_flag equal to zero, writes the base_layer is_left_view_flag in the SEI message, and passes control to a function block **430**. The function block **430** codes the right view as the base layer and the left view as the enhancement layer using SNR, spatial, and/or temporal scalability, and passes control to the end block **435**.

**[0077]** Turning to FIG. **5**, a method for scalable video decoding capable of decoding a pair of stereoscopic views of stereoscopic content is indicated generally by the reference numeral **500**. The method **500** includes a start block **505** that passes control to a function block **510**. The function block parses the base_layer_is_left_view_flag in the SEI message, and passes control to a decision block **515**. The decision block **515** determines whether or not the base_layer is_left_view_flag is equal to one. If so, then control is passed to a function block **520**. Otherwise, control is passed to a function block **525**.

**[0078]** The function block **520** decodes the left view from the base layer and the right view from the enhancement layer using SNR, spatial, and/or temporal scalability, and passes control to an end block **599**.

**[0079]** The function block **525** decodes the right view from the base layer and the left view from the enhancement layer using SNR, spatial, and/or temporal scalability, and passes control to the end block **599**.

**[0080]** FIGS. **6** and **7** correspond to the second exemplary embodiment of the present principles.

**[0081]** Turning to FIG. **6**, a method for scalable video encoding capable of encoding a pair of stereoscopic views of stereoscopic content is indicated generally by the reference numeral **600**. The method **600** includes a start block **605** that passes control to a function block **610**. The function block **610** codes one view of the stereoscopic content as a base layer and codes a depth/disparity map corresponding to the stereoscopic video as an enhancement layer using SNR, spatial, and/or temporal scalability, and passes control to a function block **615**. The function block **615** writes depth parameters in the SEI message, and passes control to a function block **620**. The function block **620** reconstructs another (non-coded) view of the stereoscopic content using reconstructed video from the base layer, a reconstructed depth/disparity map from the enhancement layer and depth parameters from the SEI message, and passes control to a function block **625**. The function block **625** codes an additional SNR layer based on the reconstructed non-coded view, and passes control to an end block **630**.

**[0082]** Turning to FIG. **7**, a method for scalable video decoding capable of decoding a pair of stereoscopic views of stereoscopic content is indicated generally by the reference numeral **700**. The method **700** includes a start block **705** that passes control to a function block **710**. The function block **710** decodes one stereoscopic view of stereoscopic content from the base layer, decodes a depth/disparity map from the enhancement layer, using SNR, spatial and/or temporal scalability, and passes control to a function block **715**. The function block **715** parses depth messages from the SEI message, and passes control to a function block **720**. The function block **720** reconstructs another stereoscopic (non-coded) view as the base layer using reconstructed video from the base layer, reconstructed depth/disparity map from the enhancement layer, and depth parameters from the SEI message, and passes control to a function block **725**. The function block **725**

decodes an additional SNR layer based on the reconstructed non-coded view, forms a refined non-coded view, and passes control to an end block **730**.

**[0083]** Turning to FIG. **8**, a scalable video coding method for encoding a macroblock in an enhancement layer is indicted generally by the reference numeral **800**. The method **800** includes a start block **805** that passes control to a decision block **810**. The decision block **810** determines whether or not to use inter-layer prediction. If so, then control is passed to a decision block **815**. Otherwise, control is passed to a function block **855**.

**[0084]** The decision block **815** determines whether or not to use inter-layer intra texture prediction. If so, then control is passed to a decision block **820**. Otherwise, control is passed to a decision block **830**.

**[0085]** The decision block **820** determines whether or not to use weighted prediction. If so, then control is passed to a function block **825**. Otherwise, control is passed to a function block **840**.

**[0086]** The function block **825** codes a different between the macroblock in the enhancement layer and a weighted macroblock scaled from a set of mapped macroblocks in the base layer, and passes control to the decision block **830**.

**[0087]** The decision block **830** determines whether or not to use inter-layer motion vector prediction. If so, then control is passed to a function block **835**. Otherwise, control is passed to a decision block **845**.

**[0088]** The function block **835** performs mode mapping and motion vector mapping, and passes control to the decision block **845**.

**[0089]** The decision block **845** determines whether or not inter-layer residue prediction. If so, then control is passed to a function block **850**. Otherwise, control is passed to the function block **855**.

**[0090]** The function block **850** performs mode mapping and residue mapping, and passes control to the function block **855**. In an embodiment, function block **850** may involve setting the spatial scaling factor equal to $2^{(-n)}$, n being an integer greater than zero, and performing averaging for texture downsampling of residues corresponding to the at least some blocks (**850**).

**[0091]** The function block **855** encodes the macroblock, and passes control to an end block **860**.

**[0092]** The function block **840** codes a difference between the macroblock in the enhancement layer and a macroblock scaled from a set of mapped macroblocks in the base layer, and passes control to the decision block **830**.

**[0093]** In an embodiment, function block **855** may involve constraining a spatial scaling factor to be equal to or less than one, when the spatial scalability technique is selected

**[0094]** In an embodiment, function blocks **835**, **850**, and/or **855** may involve, e.g., setting a spatial scaling factor equal to $2^{(-n)}$, n being an integer greater than zero, performing a many-to-one block mapping from the base layer to the enhancement layer, converting blocks in the base layer having an intra prediction mode to an inter-prediction mode, and forcing motion vectors and discrete cosine transform coefficients in the intra-prediction mode to be zero.

**[0095]** In an embodiment, function blocks **835** and/or **855** may involve, e.g., mapping a motion vector for a block in the enhancement layer to a scaled motion vector of a corner of a corresponding mapped block from a set of mapped blocks in the base layer, and assigning a reference index for the block in the enhancement layer to that of the corner of the corresponding mapped block in the base layer, the block in the enhancement layer being co-located with respect to the set of mapped blocks in the base layer.

**[0096]** In an embodiment, function blocks **850** and/or **855** may involve setting the spatial scaling factor equal to $2^{(-n)}$, n being an integer greater than zero, and performing averaging for texture downsampling of residues.

**[0097]** Turning to FIG. **9**, a scalable video decoding method for decoding a macroblock in an enhancement layer is indicated generally by the reference numeral **900**. The method **900** includes a start block **905** that passes control to a function block **910**. The function block **910** parses syntax for the macroblock, and passes control to a decision block **915**. The decision block **915** determines whether or not an inter-layer prediction flag is equal to one. If so, then control is passed to a decision block **920**. Otherwise, control is passed to a function block **960**.

**[0098]** The decision block **920** determines whether or not an inter-lay intra texture prediction flag is equal to one. If so, then control is passed to a decision block **925**. Otherwise, control is passed to a decision block **935**.

**[0099]** The decision block **925** determines whether or not a weighted prediction flag is equal to one. If so, then control is passed to a function block **930**. Otherwise, control is passed to a function block **945**.

**[0100]** The function block **930** decodes the difference between the macroblock in the enhancement layer and a weighted macroblock scaled from a set of mapped macroblocks in the base layer, and passes control to a decision block **935**.

**[0101]** The decision block **935** determines whether or not an inter-layer motion vector prediction flag is equal to one. If so, then control is passed to a function block **940**. Otherwise, control is passed to a decision block **950**.

**[0102]** The function block **940** performs mode mapping and motion vector mapping, and passes control to the decision block **950**.

**[0103]** The decision block **950** determines whether or not an inter-layer residue prediction flag is equal to one. If so, then control is passed to a function block **955**. Otherwise, control is passed to a function block **960**.

**[0104]** The function block **955** performs mode mapping and residue mapping, and passes control to the function block **960**.

**[0105]** The function block **960** decodes the macroblock, and passes control to an end block **965**.

**[0106]** The function block **945** decodes the difference between the macroblock in the enhancement layer and a macroblock scaled from a set of mapped macroblocks in the base layer, and passes control to the decision block **935**.

**[0107]** A description will now be given of some of the many attendant advantages/features of the present invention, some of which have been mentioned above. For example, one advantage/feature is scalable video encoder including an encoder for encoding at least two views corresponding to multi-view video content by, encoding a particular view of the at least two views as a base layer, and encoding each of at least one other view of the at least two views as an enhancement layer using a prediction from a lower layer corresponding to at least one of the particular view and the at least one other view. The at least two views are encoded based on a selection from among at least two of temporal, spatial, and signal to noise ratio scalability techniques.

**[0108]** Another advantage/feature is the scalable video encoder as described above, wherein the base layer and the enhancement layer are included a video bitstream, and the encoder adds an indicator in a message signaling the video bitstream. The indicator is for indicating that the video bitstream includes multi-view video signals.

**[0109]** Yet another advantage/feature is the scalable video encoder that adds the indicator in a message as described above, wherein the message is a Supplemental Enhancement Information (SEI) message.

**[0110]** Moreover, another advantage/feature is the scalable video encoder that adds the indicator in a message as described above, wherein the message is sent out of band.

**[0111]** Further, another advantage/feature is the scalable video encoder that adds the indicator in a message as described above, wherein the indicator is provided as metadata.

**[0112]** Also, another advantage/feature is the scalable video encoder that adds the indicator in a message as described above, wherein the indicator specifies one of the particular view or the at least one other view as being encoded in one of the base layer or the enhancement layer.

**[0113]** Additionally, another advantage/feature is the scalable video encoder as described above, wherein the temporal, spatial, and signal to noise ratio scalability techniques are performed in compliance with the Scalable Video Coding Extension of the International Organization for Standardization/International Electrotechnical Commission Moving Picture Experts Group-4 Part 10 Advanced Video Coding standard/International Telecommunication Union, Telecommunication Sector H.264 standard.

**[0114]** Moreover, another advantage/feature is the scalable video encoder as described above, wherein the encoder constrains a spatial scaling factor to be equal to or less than one, when the spatial scalability technique is selected.

**[0115]** Further, another advantage/feature is the scalable video encoder that constrains the spatial scaling factor as described above, wherein the encoder encodes at least some blocks in the base layer and the enhancement layer using inter-layer prediction, by setting the spatial scaling factor equal to $2^{(-n)}$, n being an integer greater than zero, performing a many-to-one block mapping from the base layer to the enhancement layer, converting any of the at least some blocks in the base layer having an intra prediction mode to an inter-prediction mode, and forcing motion vectors and discrete cosine transform coefficients in the intra-prediction mode to be zero.

**[0116]** Also, another advantage/feature is the scalable video encoder that encodes at least some blocks in the base layer and the enhancement layer using inter-layer prediction as described above, wherein the encoder maps a motion vector for a block in the enhancement layer to a scaled motion vector of a corner of a corresponding mapped block from a set of mapped blocks in the base layer, and assigns a reference index for the block in the enhancement layer to that of the corner of the corresponding mapped block in the base layer, the block in the enhancement layer and the set of mapped blocks in the base layer included in the at least some blocks, the block in the enhancement layer being co-located with respect to the set of mapped blocks in the base layer.

**[0117]** Additionally, another advantage/feature is the scalable video encoder that constrains the spatial scaling factor as described above, wherein the encoder encodes at least some blocks in the base layer and the enhancement layer by setting the spatial scaling factor equal to $2^{(-n)}$, n being an integer greater than zero, and performing averaging for texture downsampling of residues corresponding to the at least some blocks.

**[0118]** Moreover, another advantage/feature is the scalable video encoder as described above, wherein the at least two views are encoded by enabling weighted prediction for cross view prediction between the particular view and the at least one other view.

**[0119]** Further, another advantage/feature is the scalable video encoder that encodes the at least two views by enabling cross view prediction as described above, wherein the weighted prediction is enabled when coding a difference between a macroblock in the enhancement layer and a weighted macroblock scaled from a set of mapped macroblocks in the base layer, the macroblock in the enhancement layer being co-located with respect to the set of mapped macroblocks in the base layer.

**[0120]** Additionally, another advantage/feature is the scalable video encoder as described above, wherein the at least two views correspond to a pair of stereoscopic views, with one view of the pair being encoded as the base layer and another view of the pair being encoded as the enhancement layer using a prediction from the base layer.

**[0121]** These and other features and advantages of the present invention may be readily ascertained by one of ordinary skill in the pertinent art based on the teachings herein. It is to be understood that the teachings of the present invention may be implemented in various forms of hardware, software, firmware, special purpose processors, or combinations thereof.

**[0122]** Most preferably, the teachings of the present invention are implemented as a combination of hardware and software. Moreover, the software is preferably implemented as an application program tangibly embodied on a program storage unit. The application program may be uploaded to, and executed by, a machine comprising any suitable architecture. Preferably, the machine is implemented on a computer platform having hardware such as one or more central processing units ("CPU"), a random access memory ("RAM"), and input/output ("I/O") interfaces. The computer platform may also include an operating system and microinstruction code. The various processes and functions described herein may be either part of the microinstruction code or part of the application program, or any combination thereof, which may be executed by a CPU. In addition, various other peripheral units may be connected to the computer platform such as an additional data storage unit and a printing unit.

**[0123]** It is to be further understood that, because some of the constituent system components and methods depicted in the accompanying drawings are preferably implemented in software, the actual connections between the system components or the process function blocks may differ depending upon the manner in which the present invention is programmed. Given the teachings herein, one of ordinary skill in the pertinent art will be able to contemplate these and similar implementations or configurations of the present invention.

**[0124]** Although the illustrative embodiments have been described herein with reference to the accompanying drawings, it is to be understood that the present invention is not limited to those precise embodiments, and that various changes and modifications may be effected therein by one of ordinary skill in the pertinent art without departing from the scope or spirit of the present invention. All such changes and

modifications are intended to be included within the scope of the present invention as set forth in the appended claims.

**1**. An apparatus comprising:

an encoder for encoding at least two views corresponding to multi-view video content by, encoding a particular view of the at least two views as a base layer, and encoding each of at least one other view of the at least two views as an enhancement layer using a prediction from a lower layer corresponding to at least one of the particular view and the at least one other view,

wherein the at least two views are encoded based on a selection from among at least two of temporal, spatial, and signal to noise ratio scalability techniques.

**2**. The apparatus of claim **1**, wherein the base layer and the enhancement layer are included a video bitstream, and said encoder adds an indicator in a message signaling the video bitstream, the indicator for indicating that the video bitstream includes multi-view video signals.

**3**. The apparatus of claim **2**, wherein the message is a Supplemental Enhancement Information (SEI) message.

**4**. The apparatus of claim **2**, wherein the message is sent out of band.

**5**. The apparatus of claim **2**, wherein the indicator is provided as metadata.

**6**. The apparatus of claim **2**, wherein the indicator specifies one of the particular view or the at least one other view as being encoded in one of the base layer or the enhancement layer.

**7**. The apparatus of claim **1**, wherein the temporal, spatial, and signal to noise ratio scalability techniques are performed in compliance with the Scalable Video Coding Extension of the International Organization for Standardization/International Electrotechnical Commission Moving Picture Experts Group-4 Part 10 Advanced Video Coding standard/International Telecommunication Union, Telecommunication Sector H.264 standard.

**8**. The apparatus of claim **1**, wherein said encoder constrains a spatial scaling factor to be equal to or less than one, when the spatial scalability technique is selected.

**9**. The apparatus of claim **8**, wherein said encoder encodes at least some blocks in the base layer and the enhancement layer using inter-layer prediction, by setting the spatial scaling factor equal to $2^{(-n)}$, n being an integer greater than zero, performing a many-to-one block mapping from the base layer to the enhancement layer, converting any of the at least some blocks in the base layer having an intra prediction mode to an inter-prediction mode, and forcing motion vectors and discrete cosine transform coefficients in the intra-prediction mode to be zero.

**10**. The apparatus of claim **9**, wherein said encoder maps a motion vector for a block in the enhancement layer to a scaled motion vector of a corner of a corresponding mapped block from a set of mapped blocks in the base layer, and assigns a reference index for the block in the enhancement layer to that of the corner of the corresponding mapped block in the base layer, the block in the enhancement layer and the set of mapped blocks in the base layer included in the at least some blocks, the block in the enhancement layer being co-located with respect to the set of mapped blocks in the base layer.

**11**. The apparatus of claim **8**, wherein said encoder encodes at least some blocks in the base layer and the enhancement layer by setting the spatial scaling factor equal to $2^{(-n)}$, n being an integer greater than zero, and performing averaging for texture downsampling of residues corresponding to the at least some blocks.

**12**. The apparatus of claim **1**, wherein the at least two views are encoded by enabling weighted prediction for cross view prediction between the particular view and the at least one other view.

**13**. The apparatus of claim **12**, wherein the weighted prediction is enabled when coding a difference between a macroblock in the enhancement layer and a weighted macroblock scaled from a set of mapped macroblocks in the base layer, the macroblock in the enhancement layer being co-located with respect to the set of mapped macroblocks in the base layer.

**14**. The apparatus of claim **1**, wherein the at least two views correspond to a pair of stereoscopic views, with one view of the pair being encoded as the base layer and another view of the pair being encoded as the enhancement layer using a prediction from the base layer.

**15**. A method for scalable video encoding,

comprising

encoding at least two views corresponding to multi-view video content by, encoding a particular view of the at least two views as a base layer, and encoding each of at least one other view of the at least two views as an enhancement layer using a prediction from a lower layer corresponding to at least one of the particular view and the at least one other view,

wherein the at least two views are encoded based on a selection from among at least two of temporal, spatial, and signal to noise ratio scalability techniques.

**16**. The method of claim **15**, wherein the base layer and the enhancement layer are included a video bitstream, and said encoding step comprises adding an indicator in a message signaling the video bitstream, the indicator for indicating that the video bitstream includes multi-view video signals.

**17**. The method of claim **16**, wherein the message is a Supplemental Enhancement Information (SEI) message.

**18**. The method of claim **16**, wherein the message is sent out of band.

**19**. The method of claim **16**, wherein the indicator is provided as metadata.

**20**. The method of claim **16**, wherein the indicator specifies one of the particular view or the at least one other view as being encoded in one of the base layer or the enhancement layer.

**21**. The method of claim **15**, wherein the temporal, spatial, and signal to noise ratio scalability techniques are performed in compliance with the Scalable Video Coding Extension of the International Organization for Standardization/International Electrotechnical Commission Moving Picture Experts Group-4 Part 10 Advanced Video Coding standard/International Telecommunication Union, Telecommunication Sector H.264 standard.

**22**. The method of claim **15**, wherein said encoding step comprises constraining a spatial scaling factor to be equal to or less than one, when the spatial scalability technique is selected.

**23**. The method of claim **22**, wherein said encoding step encodes at least some blocks in the base layer and the enhancement layer using inter-layer prediction, by setting the spatial scaling factor equal to $2^{(-n)}$, n being an integer greater than zero, performing a many-to-one block mapping from the base layer to the enhancement layer, converting any of the at least some blocks in the base layer having an intra prediction

mode to an inter-prediction mode, and forcing motion vectors and discrete cosine transform coefficients in the intra-prediction mode to be zero.

**24**. The method of claim **23**, wherein said encoding step maps a motion vector for a block in the enhancement layer to a scaled motion vector of a corner of a corresponding mapped block from a set of mapped blocks in the base layer, and assigns a reference index for the block in the enhancement layer to that that of the corner of the corresponding mapped block in the base layer, the block in the enhancement layer and the set of mapped blocks in the base layer included in the at least some blocks, the block in the enhancement layer being co-located with respect to the set of mapped blocks in the base layer.

**25**. The method of claim **22**, wherein said encoding step encodes at least some blocks in the base layer and the enhancement layer by setting the spatial scaling factor equal to $2^{(-n)}$, n being an integer greater than zero, and performing averaging for texture downsampling of residues corresponding to the at least some blocks.

**26**. The method of claim **15**, wherein the at least two views are encoded by enabling weighted prediction for cross view prediction between the particular view and the at least one other view.

**27**. The method of claim **26**, wherein the weighted prediction is enabled when coding a difference between a macroblock in the enhancement layer and a weighted macroblock scaled from a set of mapped macroblocks in the base layer, the macroblock in the enhancement layer being co-located with respect to the set of mapped macroblocks in the base layer.

**28**. The method of claim **15**, wherein the at least two views correspond to a pair of stereoscopic views, with one view of the pair being encoded as the base layer and another view of the pair being encoded as the enhancement layer using a prediction from the base layer.

**29**. An apparatus comprising

a decoder for decoding at least two views corresponding to multi-view video content by, decoding a particular view of the at least two views as a base layer, and decoding each of at least one other view of the at least two views as an enhancement layer using a prediction from a lower layer corresponding to at least one of the particular view and the at least one other view,

wherein the at least two views are decoded based on a selection from among at least two of temporal, spatial, and signal to noise ratio scalability techniques.

**30**. The apparatus of claim **28**, wherein the base layer and the enhancement layer are included a video bitstream, and said decoder reads an indicator in a message signaling the video bitstream, the indicator for indicating that the video bitstream includes multi-view video signals.

**31**. The apparatus of claim **29**, wherein the message is a Supplemental Enhancement Information (SEI) message.

**32**. The apparatus of claim **29**, wherein the message is received out of band.

**33**. The apparatus of claim **29**, wherein the indicator is provided as metadata.

**34**. The apparatus of claim **30**, wherein the indicator specifies one of the particular view or the at least one other view as being encoded in one of the base layer or the enhancement layer.

**35**. The apparatus of claim **29**, wherein the temporal, spatial, and signal to noise ratio scalability techniques are performed in compliance with the Scalable Video Coding Extension of the International Organization for Standardization/International Electrotechnical Commission Moving Picture Experts Group-4 Part 10 Advanced Video Coding standard/International Telecommunication Union, Telecommunication Sector I-1.264 standard.

**36**. The apparatus of claim **29**, wherein the at least two views are decoded by enabling weighted prediction for cross view prediction between the particular view and the at least one other view.

**37**. The apparatus of claim **36**, wherein the weighted prediction is enabled when decoding a difference between a macroblock in the enhancement layer and a weighted macroblock scaled from a set of mapped macroblocks in the base layer, the macroblock in the enhancement layer being co-located with respect to the set set of mapped macroblocks in the base layer.

**38**. The apparatus of claim **29**, wherein the at least two views correspond to a pair of stereoscopic views, with one view of the pair being decoded as the base layer and another view of the pair being decoded as the enhancement layer using a prediction from the base layer.

**39**. A method for scalable video decoding,

comprising

decoding at least two views corresponding to multi-view video content by, decoding a particular view of the at least two views as a base layer, and decoding each of at least one other view of the at least two views as an enhancement layer using a prediction from a lower layer corresponding to at least one of the particular view and the at least one other view,

wherein the at least two views are decoded based on a selection from among at least two of temporal, spatial, and signal to noise ratio scalability techniques.

**40**. The method of claim **39**, wherein the base layer and the enhancement layer are included a video bitstream, and said decoder reads an indicator in a message signaling the video bitstream, the indicator for indicating that the video bitstream includes multi-view video signals.

**41**. The method of claim **40**, wherein the message is a Supplemental Enhancement Information (SEI) message.

**42**. The method of claim **40**, wherein the message is received out of band.

**43**. The method of claim **40**, wherein the indicator is provided as metadata.

**44**. The method of claim **40**, wherein the indicator specifies one of the particular view or the at least one other view as being encoded in one of the base layer or the enhancement layer.

**45**. The method of claim **39**, wherein the temporal, spatial, and signal to noise ratio scalability techniques are performed in compliance with the Scalable Video Coding Extension of the International Organization for Standardization/International Electrotechnical Commission Moving Picture Experts Group-4 Part 10 Advanced Video Coding standard/International Telecommunication Union, Telecommunication Sector H.264 standard.

**46**. The method of claim **39**, wherein the at least two views are decoded by enabling weighted prediction for cross view prediction between the first stereoscopic view and the second stereoscopic view.

**47**. The method of claim **46**, wherein the weighted prediction is enabled when decoding a difference between a macroblock in the enhancement layer and a weighted macroblock scaled from a set of mapped macroblocks in the base layer, the

macroblock in the enhancement layer being co-located with respect to the set of mapped macroblocks in the base layer.

**48**. The scalable video encoder of claim **39**, wherein the at least two views correspond to a pair of stereoscopic views, with one view of the pair being encoded as the base layer and another view of the pair being encoded as the enhancement layer using a prediction from the base layer.

**49**. A video signal structure for scalable video encoding, comprising:

a particular view of at least two views encoded as a base layer; and

at least one other view of the at least two views encoded as an enhancement layer using a prediction from a lower layer corresponding to at least one of the particular view and the at least one other view,

wherein the at least two views correspond to multi-view video content and are encoded based on a selection from among at least two of temporal, spatial, and SNR scalability techniques.

**50**. A storage media having scalable video signal data encoded thereupon, comprising:

a particular view of at least two views encoded as a base layer; and

at least one other view of the at least two views encoded as an enhancement layer using a prediction from a lower layer corresponding to at least one of the particular view and the at least one other view,

wherein the at least two views correspond to multi-view video content and are encoded based on a selection from among at least two of temporal, spatial, and SNR scalability techniques.

**51**. An apparatus comprising:

an encoder for encoding a first stereoscopic view as a base layer, and encoding at least one of a depth map and a disparity map as an enhancement layer using a prediction from the first stereoscopic view,

wherein the first stereoscopic view and the at least one of the depth map and the disparity map each correspond to a particular stereoscopic content and are encoded based on a selection from among at least two of temporal, spatial, and SNR scalability techniques.

**52**. The apparatus of claim **51**, wherein the base layer and the enhancement layer are included a video bitstream, and said encoder adds additional three-dimensional information relating to the particular stereoscopic content in a message signaling the video bitstream.

**53**. The apparatus of claim **52**, wherein the message is a Supplemental Enhancement Information (SEI) message.

**54**. The apparatus of claim **52**, wherein the message is sent out of band.

**55**. The apparatus of claim **52**, wherein the additional three-dimensional information is provided as metadata.

**56**. The apparatus of claim **52**, wherein said encoder reconstructs a non-coded view of the particular stereoscopic content using reconstructed video from the base layer, at least one of a reconstructed depth map and a reconstructed disparity map, and the additional three-dimensional information in the message, and encodes an additional enhancement layer based on the reconstructed non-coded view.

**57**. The apparatus of claim **51**, wherein the temporal, spatial, and signal to noise ratio scalability techniques are performed in compliance with the Scalable Video Coding Extension of the International Organization for Standardization/International Electrotechnical Commission Moving Picture Experts Group-4 Part 10 Advanced Video Coding standard/International Telecommunication Union, Telecommunication Sector H.264 standard.

**58**. The apparatus of claim **51**, wherein said encoder constrains a spatial scaling factor to be equal to or less than one, when the spatial scalability technique is selected.

**59**. The apparatus of claim **58**, wherein said encoder encodes at least some blocks in the base layer and the enhancement layer using inter-layer prediction, by setting the spatial scaling factor equal to $2^{(-n)}$, n being an integer greater than zero, performing a many-to-one block mapping from the base layer to the enhancement layer, converting any of the at least some blocks in the base layer having an intra prediction mode to an inter-prediction mode, and forcing motion vectors and discrete cosine transform coefficients in the intra-prediction mode to be zero.

**60**. The apparatus of claim **59**, wherein said encoder maps a motion vector for a block in the enhancement layer to a scaled motion vector of a corner of a corresponding mapped block from a set of mapped blocks in the base layer, and assigns a reference index for the block in the enhancement layer to that of the corner of the corresponding mapped block in the base layer, the block in the enhancement layer and the set of mapped blocks in the base layer included in the at least some blocks, the block in the enhancement layer being co-located with respect to the set of mapped blocks in the base layer.

**61**. The apparatus of claim **58**, wherein said encoder encodes at least some blocks in the base layer and the enhancement layer by setting the spatial scaling factor equal to $2^{(-n)}$, n being an integer greater than zero, and performing averaging for texture downsampling of residues corresponding to the at least some blocks.

**62**. The apparatus of claim **51**, wherein the pair of stereoscopic views is encoded by enabling weighted prediction for cross view prediction between the first stereoscopic view and the second stereoscopic view.

**63**. The apparatus of claim **62**, wherein the weighted prediction is enabled when coding a difference between a macroblock in the enhancement layer and a weighted macroblock scaled from a set of mapped macroblocks in the base layer, the macroblock in the enhancement layer being co-located with respect to the set of mapped macroblocks in the base layer.

**64**. A method for scalable video encoding,

comprising:

encoding a first stereoscopic view as a base layer; and

encoding at least one of a depth map and a disparity map as an enhancement layer using a prediction from the first stereoscopic view,

wherein the first stereoscopic view and the at least one of the depth map and the disparity map each correspond to a particular stereoscopic content and are encoded based on a selection from among at least two of temporal, spatial, and SNR scalability techniques.

**65**. The method of claim **64**, wherein the base layer and the enhancement layer are included a video bitstream, and said encoder adds additional three-dimensional information relating to the particular stereoscopic content in a message signaling the video bitstream.

**66**. The method of claim **65**, wherein the message is a Supplemental Enhancement Information (SEI) message.

**67**. The method of claim **65**, wherein the message is sent out of band.

**68**. The method of claim **65**, wherein the additional three-dimensional information is provided as metadata.

**69**. The method of claim **65**, further comprising:

reconstructing a non-coded view of the particular stereoscopic content using reconstructed video from the base layer, at least one of a reconstructed depth map and a reconstructed disparity map, and the additional three-dimensional information in the message; and

encoding an additional enhancement layer based on the reconstructed non-coded view.

**70**. The method of claim **64**, wherein the temporal, spatial, and signal to noise ratio scalability techniques are performed in compliance with the Scalable Video Coding Extension of the International Organization for Standardization/International Electrotechnical Commission Moving Picture Experts Group-4 Part 10 Advanced Video Coding standard/International Telecommunication Union, Telecommunication Sector H.264 standard.

**71**. The method of claim **64**, wherein said encoder constrains a spatial scaling factor to be equal to or less than one, when the spatial scalable video encoding technique is selected.

**72**. The method of claim **71**, wherein said encoding step encodes at least some blocks in the base layer and the enhancement layer using inter-layer prediction, by setting the spatial scaling factor equal to $2^{(-n)}$, n being an integer greater than zero, performing a many-to-one block mapping from the base layer to the enhancement layer, converting any of the at least some blocks in the base layer having an intra prediction mode to an inter-prediction mode, and forcing motion vectors and discrete cosine transform coefficients in the intra-prediction mode to be zero.

**73**. The method of claim **72**, wherein said encoding step maps a motion vector for a block in the enhancement layer to a scaled motion vector of a corner of a corresponding mapped block from a set of mapped blocks in the base layer, and assigns a reference index for the block in the enhancement layer to that of the corner of the corresponding mapped block in the base layer, the block in the enhancement layer and the set of mapped blocks in the base layer included in the at least some blocks, the block in the enhancement layer being co-located with respect to the set of mapped blocks in the base layer.

**74**. The method of claim **72**, wherein said encoding step encodes at least some blocks in the base layer and the enhancement layer by setting the spatial scaling factor equal to $2^{(-n)}$, n being an integer greater than zero, and performing averaging for texture downsampling of residues corresponding to the at least some blocks.

**75**. The method of claim **64**, wherein the pair of stereoscopic views is encoded by enabling weighted prediction for cross view prediction between the first stereoscopic view and the second stereoscopic view.

**76**. The method of claim **75**, wherein the weighted prediction is enabled when coding a difference between a macroblock in the enhancement layer and a weighted macroblock scaled from a set of mapped macroblocks in the base layer, the macroblock in the enhancement layer being co-located with respect to the set of mapped macroblocks in the base layer.

**77**. An apparatus comprising:

a decoder for decoding a first stereoscopic view from a base layer, and decoding at least one of a depth map and a disparity map from an enhancement layer using a prediction from the first stereoscopic view,

wherein the first stereoscopic view and the at least one of the depth map and the disparity map each correspond to a particular stereoscopic content and are decoded based on a selection from among at least two of temporal, spatial, and SNR scalability techniques.

**78**. The apparatus of claim **77**, wherein the base layer and the enhancement layer are included a video bitstream, and said decoder reads additional three-dimensional information relating to the particular stereoscopic content from a message signaling the video bitstream.

**79**. The apparatus of claim **78**, wherein the message is a Supplemental Enhancement Information (SEI) message.

**80**. The apparatus of claim **78**, wherein the message is sent out of band.

**81**. The apparatus of claim **78**, wherein the additional three-dimensional information is provided as metadata.

**82**. The apparatus of claim **78**, wherein said decoder reconstructs a non-coded view of the particular stereoscopic content as the base layer using reconstructed video from the base layer, at least one of a reconstructed depth map and a reconstructed disparity map, and the additional three-dimensional information in the message, and decodes an additional enhancement layer based on the reconstructed non-coded view to form a refined non-coded view of the particular stereoscopic content.

**83**. The apparatus of claim **77**, wherein the temporal, spatial, and signal to noise ratio scalability techniques are performed in compliance with the Scalable Video Coding Extension of the International Organization for Standardization/International Electrotechnical Commission Moving Picture Experts Group-4 Part 10 Advanced Video Coding standard/International Telecommunication Union, Telecommunication Sector 11.264 standard.

**84**. The apparatus of claim **77**, wherein the pair of stereoscopic views is decoded by enabling weighted prediction for cross view prediction between the first stereoscopic view and the second stereoscopic view.

**85**. The apparatus of claim **84**, wherein the weighted prediction is enabled when decoding a difference between a macroblock in the enhancement layer and a weighted macroblock scaled from a set of mapped macroblocks in the base layer, the macroblock in the enhancement layer being co-located with respect to the set of mapped macroblocks in the base layer.

**86**. A method for scalable video decoding,

comprising:

decoding a first stereoscopic view from a base layer; and

decoding at least one of a depth map and a disparity map from an enhancement layer using a prediction from the first stereoscopic view,

wherein the first stereoscopic view and the at least one of the depth map and the disparity map each correspond to a particular stereoscopic content and are decoded based on a selection from among at least two of temporal, spatial, and SNR scalability techniques.

**87**. The method of claim **86**, wherein the base layer and the enhancement layer are included a video bitstream, and method further comprises reading additional three-dimensional information relating to the particular stereoscopic content from a message signaling the video bitstream.

**88**. The method of claim **87**, wherein the message is a Supplemental Enhancement Information (SEI) message.

**89**. The method of claim **87**, wherein the message is sent out of band.

**90**. The method of claim **87**, wherein the additional three-dimensional information is provided as metadata.

**91**. The method of claim **87**, further comprising:

reconstructing a non-coded view of the particular stereoscopic content as the base layer using reconstructed video from the base layer, at least one of a reconstructed depth map and a reconstructed disparity map, and the additional three-dimensional information in the message; and

decoding an additional enhancement layer based on the reconstructed non-coded view to form a refined non-coded view of the particular stereoscopic content.

**92**. The method of claim **86**, wherein the temporal, spatial, and signal to noise ratio scalability techniques are performed in compliance with the Scalable Video Coding Extension of the International Organization for Standardization/International Electrotechnical Commission Moving Picture Experts Group-4 Part 10 Advanced Video Coding standard/International Telecommunication Union, Telecommunication Sector H.264 standard.

**93**. The method of claim **86**, wherein the pair of stereoscopic views is decoded by enabling weighted prediction for cross view prediction between the first stereoscopic view and the second stereoscopic view.

**94**. The method of claim **93**, wherein the weighted prediction is enabled when decoding a difference between a macroblock in the enhancement layer and a weighted macroblock scaled from a set of mapped macroblocks in the base layer, the macroblock in the enhancement layer being co-located with respect to the set of mapped macroblocks in the base layer.

**95**. A video signal structure for scalable video encoding, comprising:

a first stereoscopic view encoded as a base layer; and

at least one of a depth map and a disparity map encoded as enhancement layer to allow a prediction from the first stereoscopic view,

wherein the first stereoscopic view and the at least one of the depth map and the disparity map each correspond to a particular stereoscopic content and are encoded based on a selection from among at least two of temporal, spatial, and SNR scalability techniques.

**96**. A storage media having scalable video signal data encoded thereupon, comprising:

a first stereoscopic view encoded as a base layer; and

at least one of a depth map and a disparity map encoded as enhancement layer to allow a prediction from the first stereoscopic view,

wherein the first stereoscopic view and the at least one of the depth map and the disparity map each correspond to a particular stereoscopic content and are encoded based on a selection from among at least two of temporal, spatial, and SNR scalability techniques.

* * * * *