US 20090257664A1

(19) United States

(12) Patent Application Publication

(10) Pub. No.: US 2009/0257664 A1

(43) Pub. Date: Oct. 15, 2009

Kao et al.

(54) METHODS AND APPARATUS FOR IN -LOOP DE-ARTIFACT FILTERING

(76) Inventors: **Meng-Ping Kao**, La Jolla, CA (US); **Peng Yin**, West Windsor, NJ (US); **Oscar Divorra Escoda**, Princeton, NJ (US)

Correspondence Address:
Thomson Licensing LLC
P.O. Box 5312, Two Independence Way
PRINCETON, NJ 08543-5312 (US)

(21) Appl. No.: **12/312,386**

(22) PCT Filed: **Oct. 25, 2007**

(86) PCT No.: **PCT/US2007/022795**

§ 371 (c)(1),
(2), (4) Date: **May 7, 2009**

Related U.S. Application Data

(60) Provisional application No. 60/864,917, filed on Nov. 8, 2006.

Publication Classification

(51) **Int. Cl.**
G06K 9/36 (2006.01)

(52) **U.S. Cl.** **382/232**

(57) **ABSTRACT**

There are provided methods and apparatus for in-loop artifact filtering. An apparatus includes an encoder for encoding an image region. The encoder has at least two filters for successively performing in-loop filtering to respectively reduce at least a first and a second type of quantization artifact.

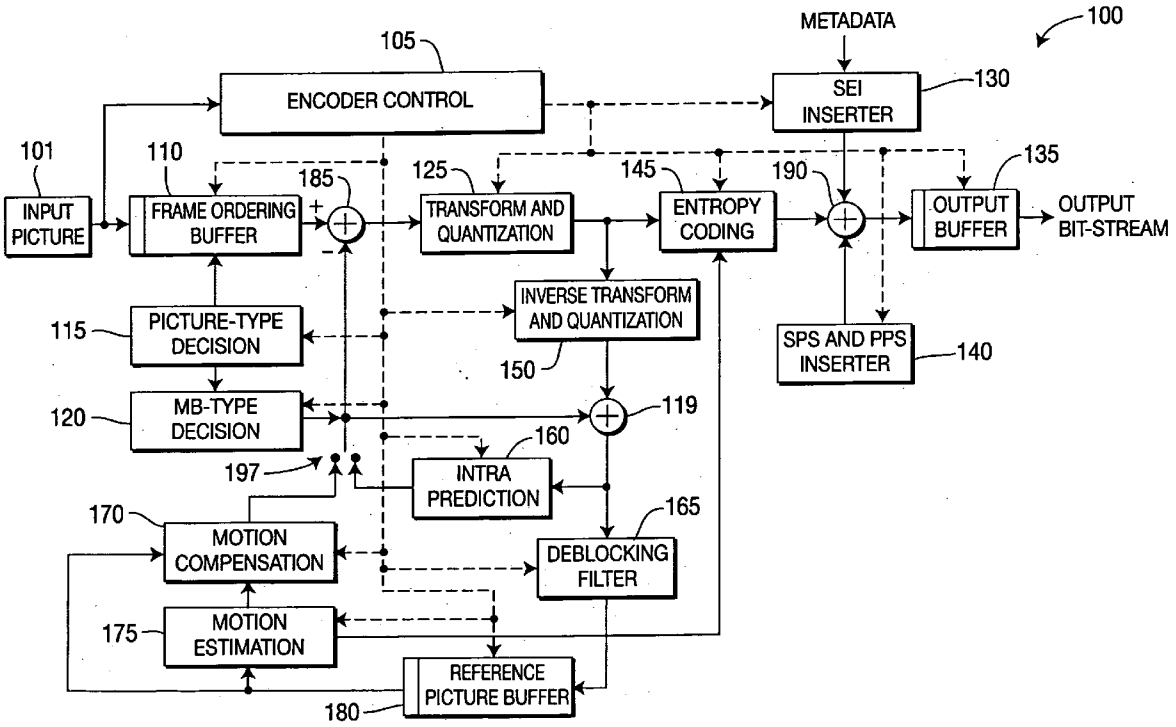

APPLE-1015

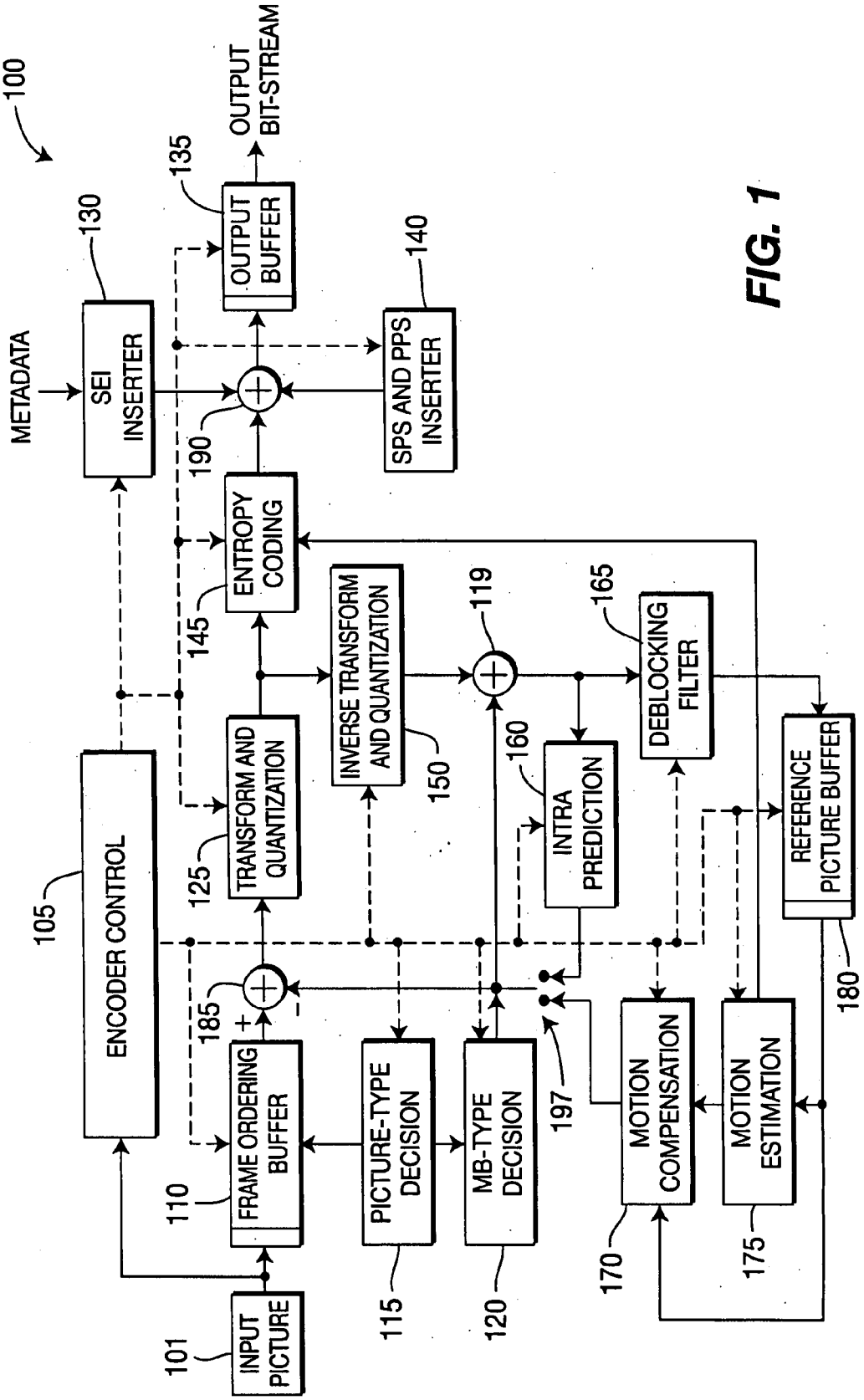
100
METADATA
SEI INSERTER
130
OUTPUT BUFFER
135
OUTPUT BIT-STREAM
SPS AND PPS INSERTER
140
190
ENTROPY CODING
145
INVERSE TRANSFORM AND QUANTIZATION
150
119
DEBLOCKING FILTER
165
REFERENCE PICTURE BUFFER
180
ENCODER CONTROL
105
TRANSFORM AND QUANTIZATION
125
INTRA PREDICTION
160
185
FRAME ORDERING BUFFER
110
PICTURE-TYPE DECISION
115
MB-TYPE DECISION
120
197
MOTION COMPENSATION
170
MOTION ESTIMATION
175
INPUT PICTURE
101

FIG. 1

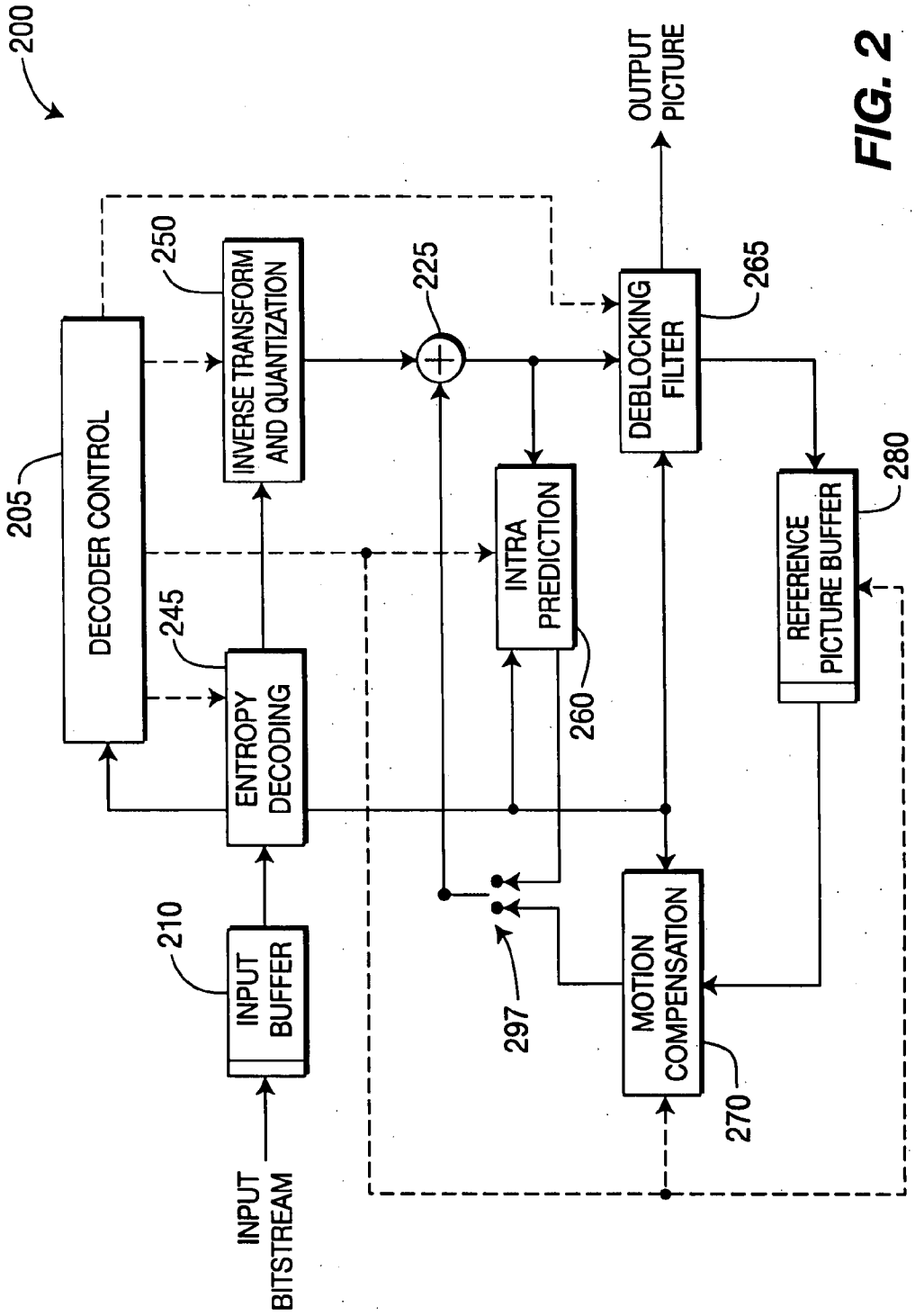
200
205
DECODER CONTROL
250
INVERSE TRANSFORM AND QUANTIZATION
225
DEBLOCKING FILTER
265
OUTPUT PICTURE
245
ENTROPY DECODING
INTRA PREDICTION
260
REFERENCE PICTURE BUFFER
280
210
INPUT BUFFER
297
MOTION COMPENSATION
270
INPUT BITSTREAM

FIG. 2

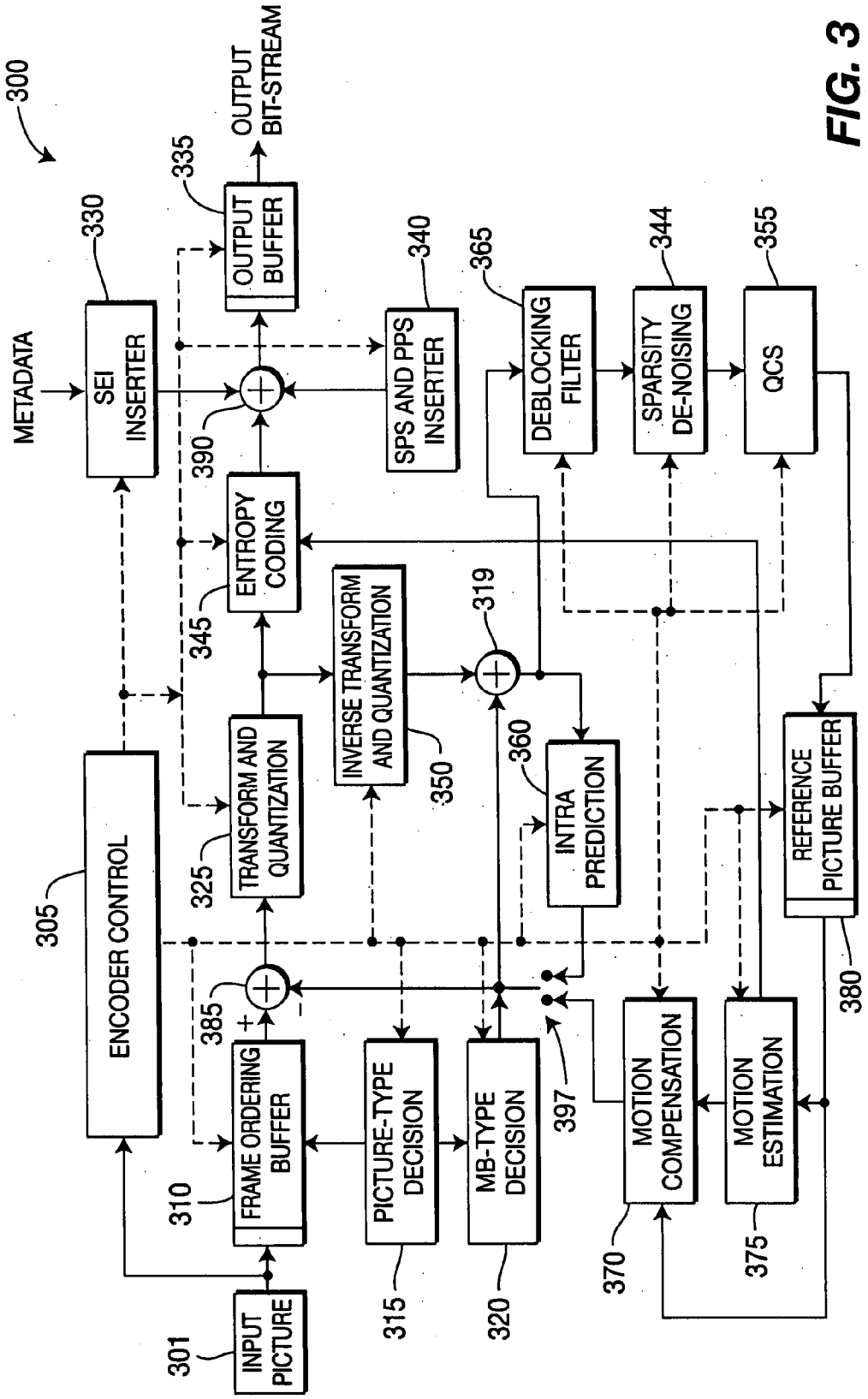
300
METADATA
SEI INSERTER
330
OUTPUT BUFFER
335
OUTPUT BIT-STREAM
390
SPS AND PPS INSERTER
340
DEBLOCKING FILTER
365
SPARSITY DE-NOISING
344
QCS
355
ENTROPY CODING
345
INVERSE TRANSFORM AND QUANTIZATION
350
319
TRANSFORM AND QUANTIZATION
325
INTRA PREDICTION
360
REFERENCE PICTURE BUFFER
380
ENCODER CONTROL
305
385
FRAME ORDERING BUFFER
310
PICTURE-TYPE DECISION
315
MB-TYPE DECISION
320
397
MOTION COMPENSATION
370
MOTION ESTIMATION
375
INPUT PICTURE
301

FIG. 3

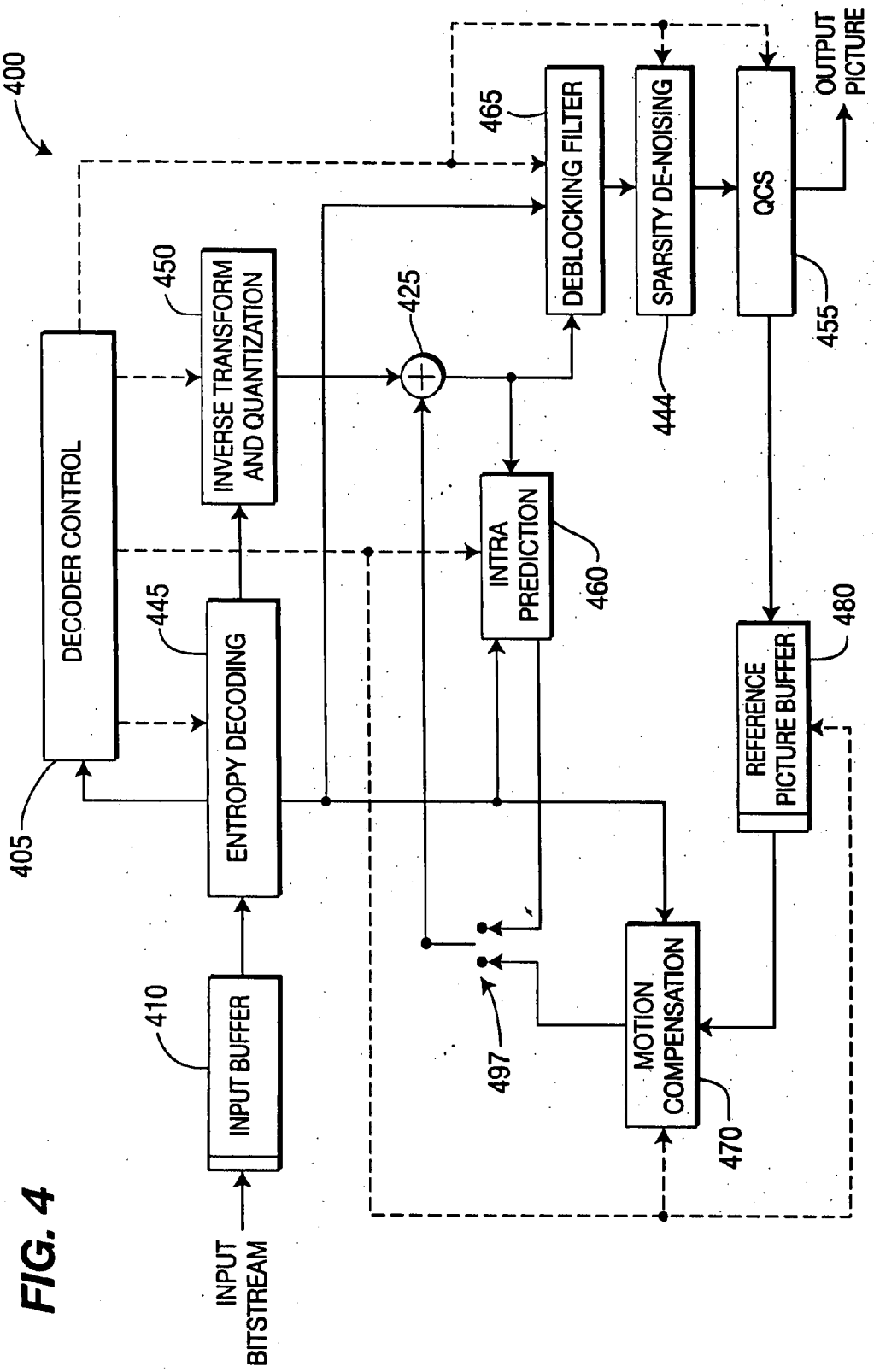
400
DECODER CONTROL
405
INPUT BITSTREAM
INPUT BUFFER
410
ENTROPY DECODING
445
INVERSE TRANSFORM AND QUANTIZATION
450
425
INTRA PREDICTION
460
497
MOTION COMPENSATION
470
DEBLOCKING FILTER
465
SPARSITY DE-NOISING
444
QCS
455
OUTPUT PICTURE
REFERENCE PICTURE BUFFER
480

FIG. 4

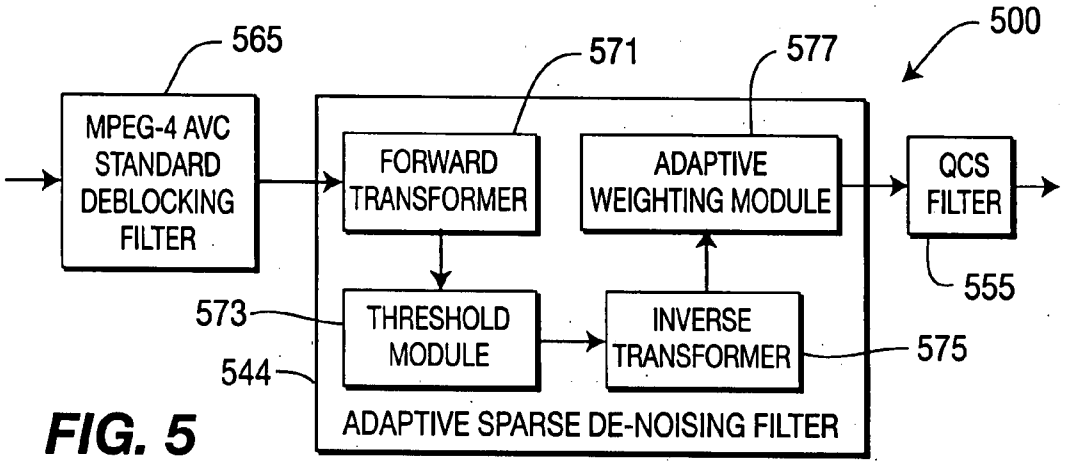
500
565
571
577
MPEG-4 AVC STANDARD DEBLOCKING FILTER
FORWARD TRANSFORMER
ADAPTIVE WEIGHTING MODULE
QCS FILTER
555
573
THRESHOLD MODULE
INVERSE TRANSFORMER
575
544
ADAPTIVE SPARSE DE-NOISING FILTER

FIG. 5

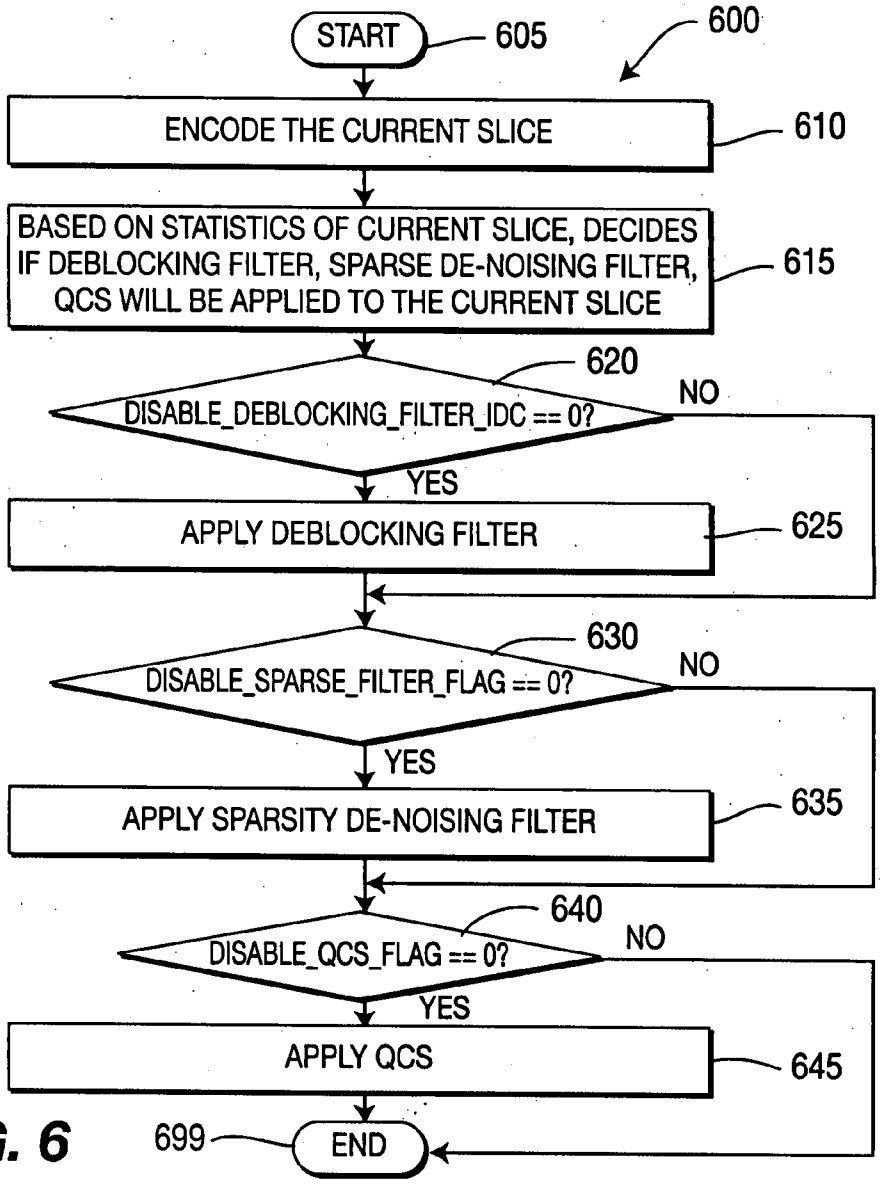
START
605
600
ENCODE THE CURRENT SLICE
610
BASED ON STATISTICS OF CURRENT SLICE, DECIDES IF DEBLOCKING FILTER, SPARSE DE-NOISING FILTER, QCS WILL BE APPLIED TO THE CURRENT SLICE
615
620
DISABLE_DEBLOCKING_FILTER_IDC == 0?
NO
YES
APPLY DEBLOCKING FILTER
625
630
DISABLE_SPARSE_FILTER_FLAG == 0?
NO
YES
APPLY SPARSITY DE-NOISING FILTER
635
640
DISABLE_QCS_FLAG == 0?
NO
YES
APPLY QCS
645
699
END

FIG. 6

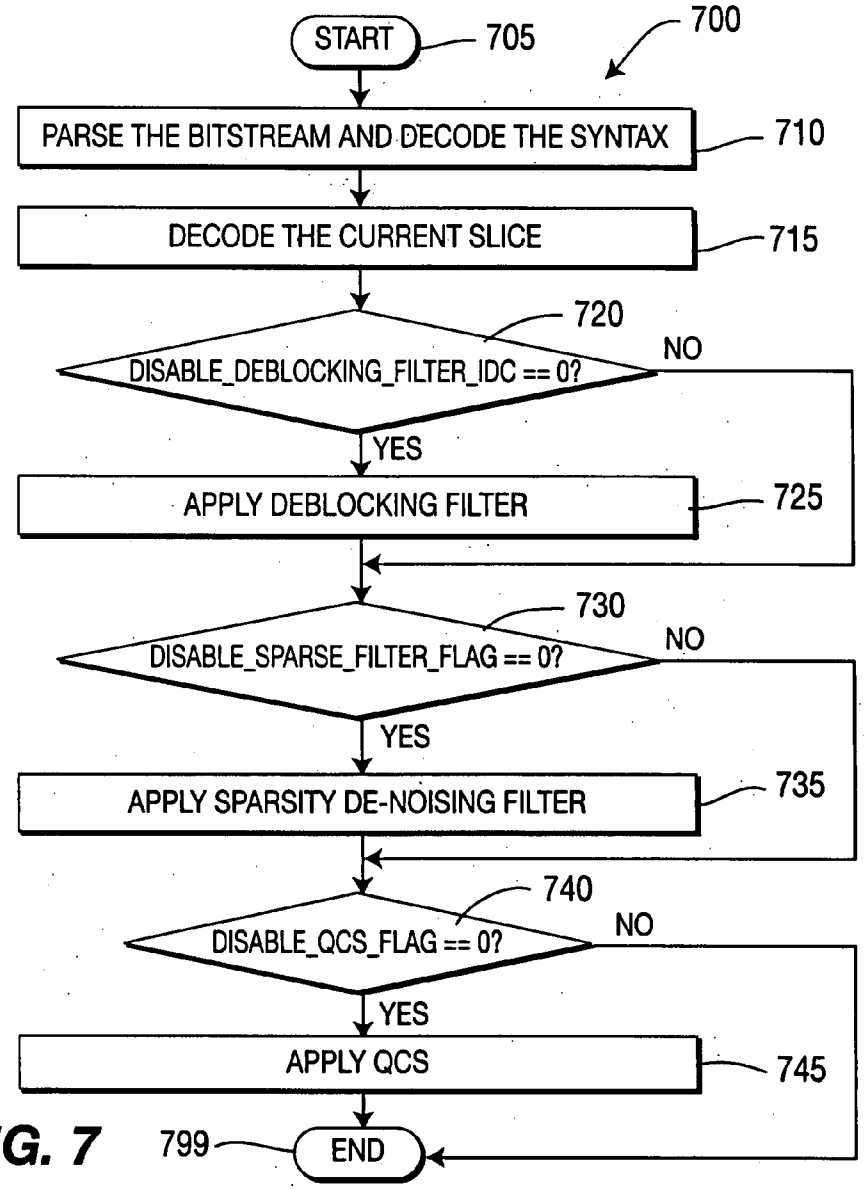
START
705
700
PARSE THE BITSTREAM AND DECODE THE SYNTAX
710
DECODE THE CURRENT SLICE
715
720
DISABLE_DEBLOCKING_FILTER_IDC == 0?
NO
YES
APPLY DEBLOCKING FILTER
725
730
DISABLE_SPARSE_FILTER_FLAG == 0?
NO
YES
APPLY SPARSITY DE-NOISING FILTER
735
740
DISABLE_QCS_FLAG == 0?
NO
YES
APPLY QCS
745
799
END

FIG. 7

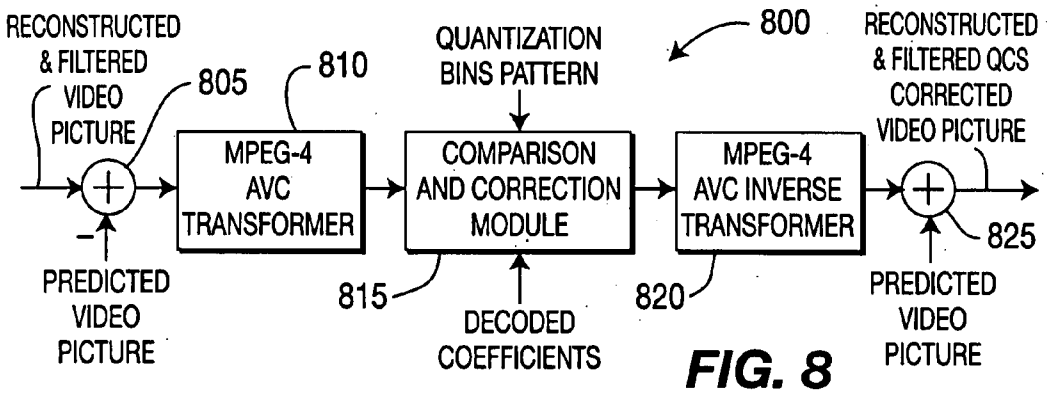
RECONSTRUCTED & FILTERED VIDEO PICTURE
805
810
QUANTIZATION BINS PATTERN
800
RECONSTRUCTED & FILTERED QCS CORRECTED VIDEO PICTURE
MPEG-4 AVC TRANSFORMER
COMPARISON AND CORRECTION MODULE
MPEG-4 AVC INVERSE TRANSFORMER
825
PREDICTED VIDEO PICTURE
815
DECODED COEFFICIENTS
820
PREDICTED VIDEO PICTURE

FIG. 8

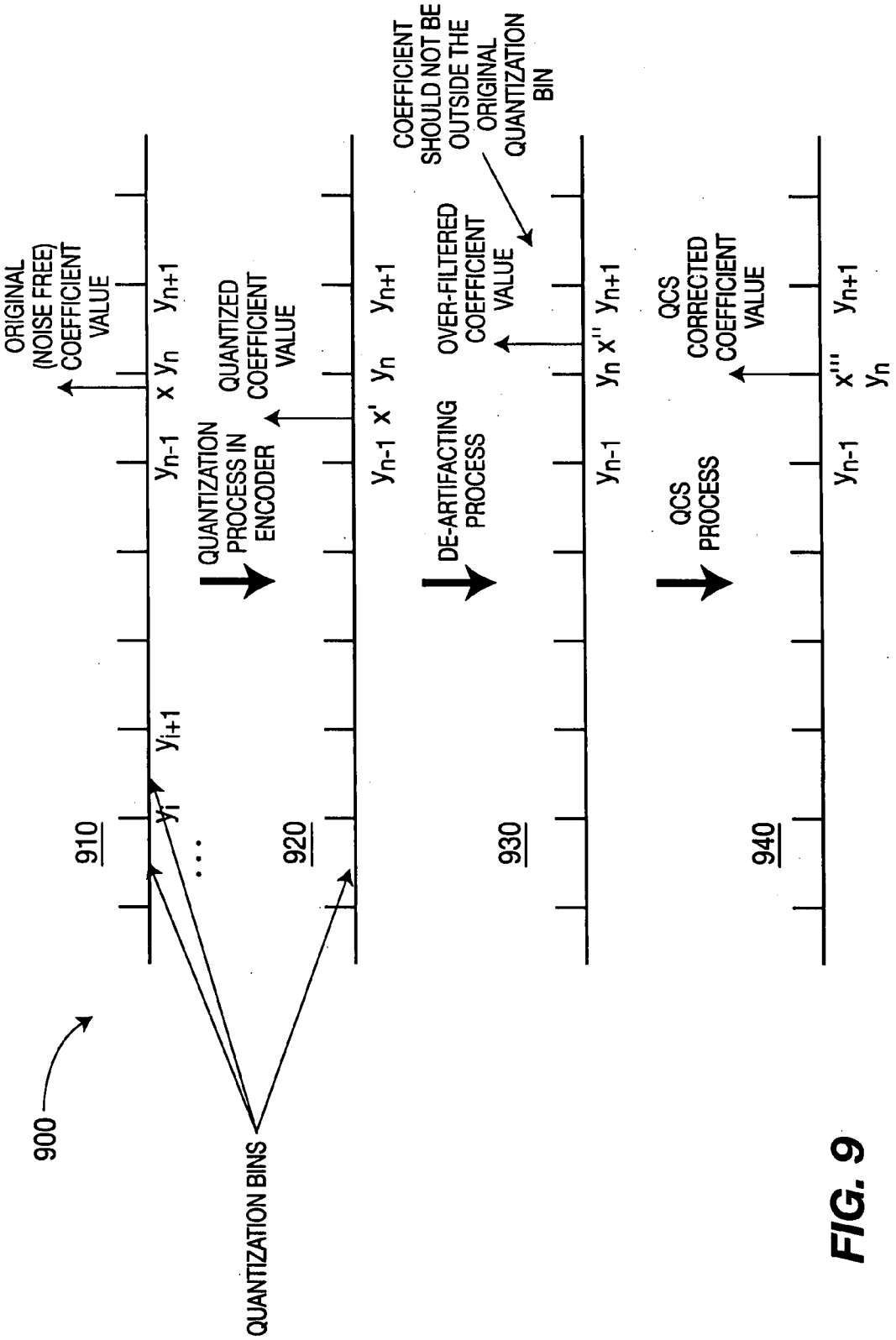
900
910
920
930
940
ORIGINAL (NOISE FREE) COEFFICIENT VALUE
QUANTIZED COEFFICIENT VALUE
COEFFICIENT SHOULD NOT BE OUTSIDE THE ORIGINAL QUANTIZATION BIN
OVER-FILTERED COEFFICIENT VALUE
QCS CORRECTED COEFFICIENT VALUE
QUANTIZATION PROCESS IN ENCODER
DE-ARTIFACTING PROCESS
QCS PROCESS
QUANTIZATION BINS
y_{n-1} x y_n y_{n+1}
y_{n-1} x' y_n y_{n+1}
y_{n-1} y_n x'' y_{n+1}
y_{n-1} x''' y_n y_{n+1}
y_i y_{i+1}

FIG. 9

METHODS AND APPARATUS FOR IN -LOOP DE-ARTIFACT FILTERING

CROSS-REFERENCE TO RELATED APPLICATIONS

[0001] This application claims the benefit of U.S. Provisional Application Ser. No. 60/864,917, filed Nov. 8, 2006, which is incorporated by reference herein in its entirety.

TECHNICAL FIELD

[0002] The present principles relate generally to video encoding and decoding and, more particularly, to methods and apparatus for in-loop de-artifact filtering.

BACKGROUND

[0003] All video compression artifacts result from quantization, which is the only lossy coding part in a hybrid video coding framework. However, those artifacts can be present in various forms such as, for example, as a blocky artifact, a ringing artifact, an edge distortion, and/or texture corruption. In general, the decoded sequence may be composed of all types of visual artifacts, but with different severances. Among the different types of visual artifacts, blocky artifacts are common in block-based video coding. These artifacts can originate from both the block-based transform stage in residue coding and from the motion compensation stage. Adaptive deblocking filters have been studied in the past and some well-known deblocking filtering methods have been proposed and adopted in various standards (such as those adopted in, for example, the International Organization for Standardization/International Electrotechnical Commission (ISO/IEC) Moving Picture Experts Group-4 (MPEG-4) Part 10 Advanced Video Coding (AVC) standard/International Telecommunication Union, Telecommunication Sector (ITU-T) H.264 recommendation (hereinafter the "MPEG-4 AVC standard"). When designed well, a deblocking filter can improve both objective and subjective video quality. In state of the art video encoders and/or decoders such as, for example, those corresponding to the MPEG-4 AVC Standard, an adaptive in-loop deblocking filter is designed to reduce blocky artifacts, wherein the strength of filtering is controlled by the values of several syntax elements. The basic idea is that if a relatively large absolute difference between samples near a block edge is measured, that difference is likely a blocking artifact and should thus be reduced. However, if the magnitude of that difference is so large that it cannot be explained by the coarseness of the quantization used in the encoding, the edge is more likely to reflect the actual behavior of the source picture and should not be smoothed over. In this way, the blockiness of the content is reduced, while the sharpness of the content is basically unchanged. The deblocking filter is adaptive on several levels. On the slice level, the global filtering strength can be adjusted to the individual characteristics of the video sequence. On the block-edge level, filtering strength is made dependent on the inter/intra prediction decision, motion differences, and the presence of coded residuals in the two neighboring blocks. On macroblock boundaries, special strong filtering is applied to remove "tiling artifacts". On the sample level, sample values and quantizer-dependent thresholds can turn off filtering for each individual sample.

[0004] Deblocking filtering in accordance with the MPEG-4 AVC Standard is well designed to reduce the blocky artifact, but it does not try to correct other artifacts caused by quantization noise. For example, deblocking filtering in accordance with the MPEG-4 AVC Standard leaves edges and textures untouched. Thus, it cannot improve distorted edges or texture. One reason for this lack of capability is that the MPEG-4 AVC Standard deblocking filter applies a smooth image model and the designed filters typically include a bank of low-pass filters. However, images include many singularities, texture, and so forth and, thus, they are not handled correctly by the MPEG-4 AVC Standard deblocking filter.

[0005] In order to overcome the limitations of the MPEG-4 AVC Standard deblocking filter, an approach has been recently proposed involving a de-noising type nonlinear in-loop filter. In this proposed approach, a nonlinear de-noising filter adapts to non-stationary image statistics which exploits a sparse image model using an over complete set of linear transforms and hard-thresholding. The nonlinear de-noising filter automatically becomes high-pass, or low-pass, or band-pass, and so forth, depending on the region the filter is operating on. The nonlinear de-noising filter can address all types of quantization noise. This particular de-noising approach basically includes three steps: transform; transform coefficients threshold; and inverse transform. Then several de-noised estimates provided by de-noising with an over complete set of transforms (typically produced by applying de-noising with shifted versions of the same transform) are combined using weighted averaging at every pixel.

[0006] Sparsity based de-noising tools could reduce quantization noise over video frames that include locally uniform regions (smooth, high frequency, texture, and so forth) separated by singularities. However, the de-noising tool was designed for additive, independent and identically distributed (i.i.d.) noise removal, while quantization noise has significantly different properties, which can present significant issues in terms of proper distortion reduction and visual de-artifacting. This implies that these techniques may get confused by true edges or false blocky edges. A possibility for a solution is spatio-frequential threshold adaptation, which may be able to correct the decision, but it is not trivial in its implementation. A possible consequence of inadequate threshold selection is that sparse de-noising might result into over-smoothed reconstructed pictures, or a blocky artifact(s) may still be present despite the filtering procedure. In particular, for the smooth picture regions, the signal as well as the blocky artifact added to the signal would probably have sparse representation at the filtering stage if the same transform is used for compression and denoising. So a thresholding operation would probably still keep the artifact. At present, it has been observed that sparsity based de-noising techniques, even though they present a higher distortion reduction in terms of objective measures (e.g., mean squared error (MSE)) than other techniques, they may present important visual artifacts that need to be addressed.

[0007] It has been observed that the use of a single de-noising filter is not very efficient or effective in removing coding artifacts. The reason for this is that a general purpose de-noising filter is usually based on a distortion model which does not exactly match the actual scenario to which it is applied. This model does not consider the local structure of blocky artifact. A special purpose de-artifacting filter, on the other hand, is designed to relieve a certain type of artifact. Accordingly, a special purpose de-noising filter is not sufficient to correct the rest of the quantization noises. For example, the in-loop deblocking filter used in the MPEG-4 AVC Standard is a special purpose filter which is not designed

to remove the noise/artifacts at pixels away from the boundaries, within textures or to correct the distorted edges.

[0008] Turning to FIG. **1**, a video encoder capable of performing video encoding in accordance with the MPEG-4 AVC standard is indicated generally by the reference numeral **100**.

[0009] The video encoder **100** includes a frame ordering buffer **110** having an output in signal communication with a non-inverting input of a combiner **185**. An output of the combiner **185** is connected in signal communication with a first input of a transformer and quantizer **125**. An output of the transformer and quantizer **125** is connected in signal communication with a first input of an entropy coder **145** and a first input of an inverse transformer and inverse quantizer **150**. An output of the entropy coder **145** is connected in signal communication with a first non-inverting input of a combiner **190**. An output of the combiner **190** is connected in signal communication with a first input of an output buffer **135**.

[0010] A first output of an encoder controller **105** is connected in signal communication with a second input of the frame ordering buffer **110**, a second input of the inverse transformer and inverse quantizer **150**, an input of a picture-type decision module **115**, an input of a macroblock-type (MB-type) decision module **120**, a second input of an intra prediction module **160**, a second input of a deblocking filter **165**, a first input of a motion compensator **170**, a first input of a motion estimator **175**, and a second input of a reference picture buffer **180**.

[0011] A second output of the encoder controller **105** is connected in signal communication with a first input of a Supplemental Enhancement Information (SEI) inserter **130**, a second input of the transformer and quantizer **125**, a second input of the entropy coder **145**, a second input of the output buffer **135**, and an input of the Sequence Parameter Set (SPS) and Picture Parameter Set (PPS) inserter **140**.

[0012] A first output of the picture-type decision module **115** is connected in signal communication with a third input of a frame ordering buffer **110**. A second output of the picture-type decision module **115** is connected in signal communication with a second input of a macroblock-type decision module **120**.

[0013] An output of the Sequence Parameter Set (SPS) and Picture Parameter Set (PPS) inserter **140** is connected in signal communication with a third non-inverting input of the combiner **190**.

[0014] An output of the inverse quantizer and inverse transformer **150** is connected in signal communication with a first non-inverting input of a combiner **119**. An output of the combiner **119** is connected in signal communication with a first input of the intra prediction module **160** and a first input of the deblocking filter **165**. An output of the deblocking filter **165** is connected in signal communication with a first input of a reference picture buffer **180**. An output of the reference picture buffer **180** is connected in signal communication with a second input of the motion estimator **175**. A first output of the motion estimator **175** is connected in signal communication with a second input of the motion compensator **170**. A second output of the motion estimator **175** is connected in signal communication with a third input of the entropy coder **145**.

[0015] An output of the motion compensator **170** is connected in signal communication with a first input of a switch **197**. An output of the intra prediction module **160** is connected in signal communication with a second input of the switch **197**. An output of the macroblock-type decision module **120** is connected in signal communication with a third input of the switch **197**. The third input of the switch **197** determines whether or not the "data" input of the switch (as compared to the control input, i.e., the third input) is to be provided by the motion compensator **170** or the intra prediction module **160**. The output of the switch **197** is connected in signal communication with a second non-inverting input of the combiner **119** and with an inverting input of the combiner **185**.

[0016] Inputs of the frame ordering buffer **110** and the encoder controller **105** are available as input of the encoder **100**, for receiving an input picture **101**. Moreover, an input of the Supplemental Enhancement Information (SEI) inserter **130** is available as an input of the encoder **100**, for receiving metadata. An output of the output buffer **135** is available as an output of the encoder **100**, for outputting a bitstream.

[0017] Turning to FIG. **2**, a video decoder capable of performing video decoding in accordance with the MPEG-4 AVC standard is indicated generally by the reference numeral **200**.

[0018] The video decoder **200** includes an input buffer **210** having an output connected in signal communication with a first input of the entropy decoder **245**. A first output of the entropy decoder **245** is connected in signal communication with a first input of an inverse transformer and inverse quantizer **250**. An output of the inverse transformer and inverse quantizer **250** is connected in signal communication with a second non-inverting input of a combiner **225**. An output of the combiner **225** is connected in signal communication with a second input of a deblocking filter **265** and a first input of an intra prediction module **260**. A second output of the deblocking filter **265** is connected in signal communication with a first input of a reference picture buffer **280**. An output of the reference picture buffer **280** is connected in signal communication with a second input of a motion compensator **270**.

[0019] A second output of the entropy decoder **245** is connected in signal communication with a third input of the motion compensator **270** and a first input of the deblocking filter **265**. A third output of the entropy decoder **245** is connected in signal communication with an input of a decoder controller **205**. A first output of the decoder controller **205** is connected in signal communication with a second input of the entropy decoder **245**. A second output of the decoder controller **205** is connected in signal communication with a second input of the inverse transformer and inverse quantizer **250**. A third output of the decoder controller **205** is connected in signal communication with a third input of the deblocking filter **265**. A fourth output of the decoder controller **205** is connected in signal communication with a second input of the intra prediction module **260**, with a first input of the motion compensator **270**, and with a second input of the reference picture buffer **280**.

[0020] An output of the motion compensator **270** is connected in signal communication with a first input of a switch **297**. An output of the intra prediction module **260** is connected in signal communication with a second input of the switch **297**. An output of the switch **297** is connected in signal communication with a first non-inverting input of the combiner **225**.

[0021] An input of the input buffer **210** is available as an input of the decoder **200**, for receiving an input bitstream. A

first output of the deblocking filter **265** is available as an output of the decoder **200**, for outputting an output picture.

SUMMARY

[0022] These and other drawbacks and disadvantages of the prior art are addressed by the present principles, which are directed to methods and apparatus for in-loop de-artifact filtering.

[0023] According to an aspect of the present principles, there is provided an apparatus. The apparatus includes an encoder for encoding an image region. The encoder has at least two filters for successively performing in-loop filtering to respectively reduce at least a first and a second type of quantization artifact.

[0024] According to another aspect of the present principles, there is provided a method. The method includes encoding an image region. The encoding step includes performing in-loop filtering to reduce at least a first and a second type of quantization artifact respectively using at least two filters in succession.

[0025] According to yet another aspect of the present principles, there is provided an apparatus. The apparatus includes a decoder for decoding an image region. The decoder has at least two filters for successively performing in-loop filtering to respectively reduce at least a first and a second type of quantization artifact.

[0026] According to still another aspect of the present principles, there is provided a method. The method includes decoding an image region. The decoding step includes performing in-loop filtering to reduce at least a first and a second type of quantization artifact respectively using at least two filters in succession.

[0027] These and other aspects, features and advantages of the present principles will become apparent from the following detailed description of exemplary embodiments, which is to be read in connection with the accompanying drawings.

BRIEF DESCRIPTION OF THE DRAWINGS

[0028] The present principles may be better understood in accordance with the following exemplary figures, in which:

[0029] FIG. **1** shows a block diagram for a video encoder capable of performing video encoding in accordance with the MPEG-4 AVC Standard;

[0030] FIG. **2** shows a block diagram for a video decoder capable of performing video decoding in accordance with the MPEG-4 AVC Standard;

[0031] FIG. **3** shows a block diagram for a video encoder capable of performing video encoding in accordance with the MPEG-4 AVC Standard, modified and/or extended for use with the present principles, according to an embodiment of the present principles;

[0032] FIG. **4** shows a block diagram for a video decoder capable of performing video decoding in accordance with the MPEG-4 AVC Standard, modified and/or extended for use with the present principles, according to an embodiment of the present principles;

[0033] FIG. **5** shows a diagram for an exemplary succession of de-artifact filters, according to an embodiment of the present principles;

[0034] FIG. **6** shows a flow diagram for an exemplary method for encoding image data using in-loop de-artifact filtering, according to an embodiment of the present principles;

[0035] FIG. **7** shows a flow diagram for an exemplary method for decoding image data using in-loop de-artifact filtering, according to an embodiment of the present principles;

[0036] FIG. **8** shows an exemplary apparatus for performing quantization constraint set (QCS) coefficients correction after artifact removal/reduction, according to an embodiment of the present principles; and

[0037] FIG. **9** shows exemplary quantization bins for an over-filtering problem and a correction approach using QCS in video encoding/decoding, according to an embodiment of the present principles.

DETAILED DESCRIPTION

[0038] The present principles are directed to methods and apparatus for in-loop de-artifact filtering.

[0039] The present description illustrates the present principles. It will thus be appreciated that those skilled in the art will be able to devise various arrangements that, although not explicitly described or shown herein, embody the present principles and are included within its spirit and scope.

[0040] All examples and conditional language recited herein are intended for pedagogical purposes to aid the reader in understanding the present principles and the concepts contributed by the inventor(s) to furthering the art, and are to be construed as being without limitation to such specifically recited examples and conditions.

[0041] Moreover, all statements herein reciting principles, aspects, and embodiments of the present principles, as well as specific examples thereof, are intended to encompass both structural and functional equivalents thereof. Additionally, it is intended that such equivalents include both currently known equivalents as well as equivalents developed in the future, i.e., any elements developed that perform the same function, regardless of structure.

[0042] Thus, for example, it will be appreciated by those skilled in the art that the block diagrams presented herein represent conceptual views of illustrative circuitry embodying the present principles. Similarly, it will be appreciated that any flow charts, flow diagrams, state transition diagrams, pseudocode, and the like represent various processes which may be substantially represented in computer readable media and so executed by a computer or processor, whether or not such computer or processor is explicitly shown.

[0043] The functions of the various elements shown in the figures may be provided through the use of dedicated hardware as well as hardware capable of executing software in association with appropriate software. When provided by a processor, the functions may be provided by a single dedicated processor, by a single shared processor, or by a plurality of individual processors, some of which may be shared. Moreover, explicit use of the term "processor" or "controller" should not be construed to refer exclusively to hardware capable of executing software, and may implicitly include, without limitation, digital signal processor ("DSP") hardware, read-only memory ("ROM") for storing software, random access memory ("RAM"), and non-volatile storage.

[0044] Other hardware, conventional and/or custom, may also be included. Similarly, any switches shown in the figures are conceptual only. Their function may be carried out through the operation of program logic, through dedicated logic, through the interaction of program control and dedi-

cated logic, or even manually, the particular technique being selectable by the implementer as more specifically understood from the context.

[0045] In the claims hereof, any element expressed as a means for performing a specified function is intended to encompass any way of performing that function including, for example, a) a combination of circuit elements that performs that function or b) software in any form, including, therefore, firmware, microcode or the like, combined with appropriate circuitry for executing that software to perform the function. The present principles as defined by such claims reside in the fact that the functionalities provided by the various recited means are combined and brought together in the manner which the claims call for. It is thus regarded that any means that can provide those functionalities are equivalent to those shown herein.

[0046] Reference in the specification to "one embodiment" or "an embodiment" of the present principles means that a particular feature, structure, characteristic, and so forth described in connection with the embodiment is included in at least one embodiment of the present principles. Thus, the appearances of the phrase "in one embodiment" or "in an embodiment" appearing in various places throughout the specification are not necessarily all referring to the same embodiment.

[0047] As used herein, "high level syntax" and "high level syntax element" interchangeably refer to syntax present in the bitstream that resides hierarchically above the macroblock layer. For example, high level syntax, as used herein, may refer to, but is not limited to, syntax at the slice header level, Supplemental Enhancement Information (SEI) level, picture parameter set level, sequence parameter set level and network abstraction layer (NAL) unit header level.

[0048] As used herein, "block level syntax" and "block level syntax element" interchangeably refer to syntax present in the bitstream that resides hierarchically at any of the possible coding units structured as a block or partitions of a block in a video coding scheme. For example, block level syntax, as used herein, may refer to, but is not limited to, syntax at the macroblock level, the 16×8 partition level, the 8×16 partition level, the 8×8 sub-block level, and general partitions of any of these. Moreover, block level syntax, as used herein, may also refer to blocks issued from the union of smaller blocks (e.g., unions of macroblocks).

[0049] The phrase "image data" is intended to refer to data corresponding to any of still images and moving images (i.e., a sequence of images including motion).

[0050] It is to be appreciated that the use of the term "and/or", for example, in the case of "A and/or B", is intended to encompass the selection of the first listed option (A), the selection of the second listed option (B), or the selection of both options (A and B). As a further example, in the case of "A, B, and/or C", such phrasing is intended to encompass the selection of the first listed option (A), the selection of the second listed option (B), the selection of the third listed option (C), the selection of the first and the second listed options (A and B), the selection of the first and third listed options (A and C), the selection of the second and third listed options (B and C), or the selection of all three options (A and B and C). This may be extended, as readily apparent by one of ordinary skill in this and related arts, for as many items listed.

[0051] Moreover, it is to be appreciated that while one or more embodiments of the present principles are described herein with respect to the MPEG-4 AVC standard, the present principles are not limited to solely this standard and, thus, may be utilized with respect to other video coding standards, recommendations, and extensions thereof, including extensions such as scalable (and non-scalable) extensions and/or multi-view (and non-multi-view) extensions of the MPEG-4 AVC standard, while maintaining the spirit of the present principles.

[0052] Turning to FIG. **3**, a video encoder capable of performing video encoding in accordance with the MPEG-4 AVC standard, modified and/or extended for use with the present principles, is indicated generally by the reference numeral **300**.

[0053] The video encoder **300** includes a frame ordering buffer **310** having an output in signal communication with a non-inverting input of a combiner **385**. An output of the combiner **385** is connected in signal communication with a first input of a transformer and quantizer **325**. An output of the transformer and quantizer **325** is connected in signal communication with a first input of an entropy coder **345** and a first input of an inverse transformer and inverse quantizer **350**. An output of the entropy coder **345** is connected in signal communication with a first non-inverting input of a combiner **390**. An output of the combiner **390** is connected in signal communication with a first input of an output buffer **335**.

[0054] A first output of an encoder controller **305** is connected in signal communication with a second input of a frame ordering buffer **310**, a second input of the inverse transformer and inverse quantizer **350**, an input of a picture-type decision module **315**, a first input of a macroblock-type (MB-type) decision module **320**, a second input of an intra prediction module **360**, a second input of a deblocking filter **365**, a first input of a motion compensator **370**, a first input of a motion estimator **375**, a second input of a reference picture buffer **380**, a first input of a sparsity de-noising filter, and a first input of a quantization constraint set (QCS) **355**.

[0055] A second output of the encoder controller **305** is connected in signal communication with a first input of a Supplemental Enhancement Information (SEI) inserter **330**, a second input of the transformer and quantizer **325**, a second input of the entropy coder **345**, a second input of the output buffer **335**, and an input of the Sequence Parameter Set (SPS) and Picture Parameter Set (PPS) inserter **340**.

[0056] A first output of the picture-type decision module **315** is connected in signal communication with a third input of the frame ordering buffer **310**. A second output of the picture-type decision module **315** is connected in signal communication with a second input of a macroblock-type decision module **320**.

[0057] An output of the Sequence Parameter Set (SPS) and Picture Parameter Set (PPS) inserter **340** is connected in signal communication with a third non-inverting input of the combiner **390**.

[0058] An output of the inverse quantizer and inverse transformer **350** is connected in signal communication with a first non-inverting input of a combiner **319**. An output of the combiner **319** is connected in signal communication with a first input of the intra prediction module **360** and a first input of the deblocking filter **365**. An output of the deblocking filter **365** is connected in signal communication with a second input of the sparsity de-noising filter **344**. An output of the sparsity de-noising filter **344** is connected in signal communication with a second input of the quantization constraint set (QCS) **355**. An output of the quantization constraint set (QCS) **355** is connected in signal communication with a first

input of the reference picture buffer **380**. An output of the reference picture buffer **380** is connected in signal communication with a second input of the motion estimator **375** and a second input of the motion compensator **370**. A first output of the motion estimator **375** is connected in signal communication with a third input of the motion compensator **370**. A second output of the motion estimator **375** is connected in signal communication with a third input of the entropy coder **345**.

[0059] An output of the motion compensator **370** is connected in signal communication with a first input of a switch **397**. An output of the intra prediction module **360** is connected in signal communication with a second input of the switch **397**. An output of the macroblock-type decision module **320** is connected in signal communication with a third input of the switch **397**. The third input of the switch **397** determines whether or not the "data" input of the switch (as compared to the control input, i.e., the third input) is to be provided by the motion compensator **370** or the intra prediction module **360**. The output of the switch **397** is connected in signal communication with a second non-inverting input of the combiner **319** and with an inverting input of the combiner **385**.

[0060] Inputs of the frame ordering buffer **310** and the encoder controller **305** are available as input of the encoder **300**, for receiving an input picture **301**. Moreover, an input of the Supplemental Enhancement Information (SEI) inserter **330** is available as an input of the encoder **300**, for receiving metadata. An output of the output buffer **335** is available as an output of the encoder **300**, for outputting a bitstream.

[0061] Turning to FIG. **4**, a video decoder capable of performing video decoding in accordance with the MPEG-4 AVC standard, modified and/or extended for use with the present principles, is indicated generally by the reference numeral **400**.

[0062] The video decoder **400** includes an input buffer **410** having an output connected in signal communication with a first input of the entropy decoder **445**. A first output of the entropy decoder **445** is connected in signal communication with a first input of an inverse transformer and inverse quantizer **450**. An output of the inverse transformer and inverse quantizer **450** is connected in signal communication with a second non-inverting input of a combiner **425**. An output of the combiner **425** is connected in signal communication with a second input of a deblocking filter **465** and a first input of an intra prediction module **460**. An output of the deblocking filter **465** is connected in signal communication with a first input of a sparsity de-noising filter **444**. An output of the sparsity de-noising filter **444** is connected in signal communication with a first input of a quantization constraint set (QCS) **455**. A first output of the quantization constraint set (QCS) **455** is connected in signal communication with a first input of a reference picture buffer **480**. An output of the reference picture buffer **480** is connected in signal communication with a second input of a motion compensator **470**.

[0063] A second output of the entropy decoder **445** is connected in signal communication with a third input of the motion compensator **470** and a first input of the deblocking filter **465**. A third output of the entropy decoder **445** is connected in signal communication with an input of a decoder controller **405**. A first output of the decoder controller **405** is connected in signal communication with a second input of the entropy decoder **445**. A second output of the decoder controller **405** is connected in signal communication with a second input of the inverse transformer and inverse quantizer **450**. A third output of the decoder controller **405** is connected in signal communication with a third input of the deblocking filter **465**, a second input of the sparsity de-noising filter **444**, and a second input of the quantization constraint set (QCS) **455**. A fourth output of the decoder controller **405** is connected in signal communication with a second input of the intra prediction module **460**, with a first input of the motion compensator **470**, and with a second input of the reference picture buffer **480**.

[0064] An output of the motion compensator **470** is connected in signal communication with a first input of a switch **497**. An output of the intra prediction module **460** is connected in signal communication with a second input of the switch **497**. An output of the switch **497** is connected in signal communication with a first non-inverting input of the combiner **425**.

[0065] An input of the input buffer **410** is available as an input of the decoder **400**, for receiving an input bitstream. A second output of the quantization constraint set (QCS) **455** is available as an output of the decoder **400**, for outputting an output picture.

[0066] With respect to the video decoder **400** of FIG. **4**, it is to be appreciated that we can allow output pictures before the application of function block **465**, or after the application of function **465**, or after application of the function block **444**, or after application of the function block **455**. That is, we can have the flexibility that the picture for prediction in the reference buffer and the picture for display are different, so we can have a better reference for prediction, and a sharper image for display.

[0067] As noted above, the present principles are directed to methods and apparatus for in-loop de-artifact filtering.

[0068] In an embodiment, we propose utilizing a succession of filters on coded pictures to reduce the amount of coding artifacts over video frames. The filters are placed in the coding loop (in-loop), so the filtered frames are used as referenced frames for motion compensation of subsequent coded frames. At least one of the filters includes, for example, a deblocking filter, a de-ringing filter, a de-noising filter, a signal estimation filter, a linear filter, and/or a non-linear filter.

[0069] In an embodiment, we propose using two-pass filters. In the first pass, we apply an adaptive deblocking filter, which targets removing blocking artifacts. In the second pass, we apply an adaptive sparse de-noising filter, which can further reduce quantization noise over video frames composed of locally uniform regions (smooth, high frequency, texture, and so forth). To further improve the result, we can enforce compression constraints including, but not limited to, quantization constraints, in order to help restore the image to the artifact-free form.

[0070] One or more embodiments herein involve the use of two or more in-loop filters (and/or two or more in-loop filtering passes) to remove or reduce quantization artifacts—the first filter (or filtering pass) to remove or reduce a first type (or group of types) of quantization artifact and the second filter (or filtering pass) to remove or reduce a second type (or group of types) of quantization artifact. It is to be appreciated that the use of even more in-loop filters (or filtering passes) is also contemplated in accordance with embodiments of the present principles. That is, given the teachings of the present principles provided herein, one of ordinary skill in this and related arts will contemplate these and various other implementa-

tions and variations of the present principles, while maintaining the spirit of the present principles.

[0071] Therefore, in accordance with the principles of the present invention, we suggest using a succession of filters (or filtering passes) to remove or reduce a plurality of possible coding artifact types caused by quantization. If done in this way, different kinds of artifacts and quantization errors are handled by different filters. Hence, by such cascaded filtering of reconstructed video pictures, the decoded sequence is substantially better in both subjective and objective measures. By incorporating this scheme into the encoder/decoder loop, also known as in-loop filtering, the inter prediction process can also benefit from the improvement of decoded reference pictures. Note that by using a succession of filters, we are not limited to a particular set of general or special purpose filters, a particular number of cascaded filters, or even a particular order in which they are combined. Those parameters may be adjusted based on, for example, the encoder and/or decoder to be used and the nature of the video data to be filtered. To prevent the input video signal being over processed, we can also enforce some compression and/or quantization constraints.

[0072] An embodiment involves the use of a "two-pass" filter. Turning to FIG. **5**, an exemplary succession of de-artifact filters is indicated generally by the reference numeral **500**. An adaptive sparse de-noising filter **544** is used as a refinement filter subsequent to the MPEG-4 AVC Standard deblocking filter **565** and before the quantization constraint set (QCS) filter **555**. Since visual blocking artifacts are most successfully removed by the deblocking filter, the remaining quantization noise tends to become more independent and identically distributed (i.i.d.), which conforms to the noise model assumption of an adaptive sparse de-noising filter. After applying the second-pass sparse de-noising filter **544**, we use the quantization constraint set filter **555** to reshape the residuals and prevent them from being over-processed. The quantization constraint set filter **555** is used to restrict each transform coefficient to its original quantization interval. This step helps prevent over-smoothing, and makes the outcome of the cascaded set of filters more robust to changes in the settings of filters including, but not limited to, changes in the thresholding parameter for the sparse-based de-noising step.

[0073] The adaptive sparse de-noising filter **544** includes a forward transformer **571** having an output in signal communication with an input of a threshold module **573**. An output of the threshold module **573** is connected in signal communication with an input of an inverse transformer **575**. An output of the inverse transformer **575** is connected in signal communication with an input of an adaptive weighting module **577**. An input of the forward transformer is available as an input of the spare de-noising filter **544**. An output of the adaptive weighting module **577** is available as an output of the spare de-noising filter **544**. An output of the MPEG-4 AVC Standard deblocking filter **565** is connected in signal communication with the input of the forward transformer **571**. The output of the adaptive weighting module **577** is connected in signal communication with an input of the quantization constraint set filter **555**. An input of the MPEG-4 AVC Standard deblocking filter **565** is available as an input of the succession of de-artifact filters **500**. An output of the quantization constraint set filter **571** is available as an output of the succession of de-artifact filters **500**.

[0074] As examples, FIGS. **3** and **4** illustrate where the adaptive sparse de-noising filter and the quantization constraint set filter may be located within a video encoder structure and a video decoder structure, respectively. In the examples shown, the adaptive sparse de-noising filter and the quantization constraint set filter, one after the other, are located after the deblocking filter. Of course, given the teachings of the present principles provided herein, one of ordinary skill in this and related arts will contemplate this and other locations for the adaptive sparse de-noising filter and the quantization constraint set filter, while maintaining the spirit of the present principles.

[0075] In an embodiment, the adaptive sparse de-noising filter and/or the quantization constraint set filter can be turned on/off at the macroblock level, slice level, picture level, and/or sequence level. For example, we may choose to only apply the sparse de-noising filter and the quantization constraint set filter for intra frames, but not for inter frames.

[0076] In an embodiment, the different artifact removing/reducing steps may be selectively switched on/off depending on complexity constraints of the application, distortion measures and/or coding costs. The transform for the sparse de-noising step can be adaptively selected from a set of possible transforms. The selected transform can be indicated and signaled to the decoder using a high level syntax. A proper threshold γ can be signaled to optimize the adaptive sparse de-noising filtering. The signaled threshold γ may need to be adapted to the quantization parameter as well as to the sequence content. The optimal weighting method can also be signaled to maximize the de-noising gain.

[0077] TABLE 1 shows exemplary picture parameter set (PPS) raw byte sequence payload (RBSP) syntax for use in in-loop de-artifact filtering in accordance with an embodiment of the present principles.

TABLE 1

pic_parameter_set_rbsp( ) {	C	Descriptor
...		
sparse_filter_control_present_flag	1	u(l)
qcs_control_present_flag	1	u(l)
...		
}		

[0078] TABLE 2 shows exemplary slice header syntax for use in in-loop de-artifact filtering in accordance with an embodiment of the present principles.

TABLE 2

slice_header( ) {	C	Descriptor
...		
if(sparse_filter_control_present_flag) {		
disable_sparse_filter_flag	2	u(l)
if(disable_sparse_filter_flag != 1) {		
sparse_threshold	2	u(v)
sparse_tranform_type	2	u(v)
adaptive_weighting_type	2	u(v)
}		
}		
if(qcs_control_present_flag) {		
disable_qcs_flag	2	u(l)
if(disable_qcs_flag != 1) {		
qcs_pullback_model	2	u(v)
}		
}		
...		
}		

[0079] With respect to TABLES 1 and 2, the following exemplary syntax definitions are provided. Of course, given the teachings of the present principles provided herein, one of ordinary skill in this and related arts will contemplate these and various other syntaxes and variations thereof for use in accordance with various embodiments of the present principles, while maintaining the spirit of the present principles.

[0080] sparse_filter_control_present_flag equal to 1 specifies that a set of syntax elements controlling the characteristics of the sparse de-noising filter is present in the slice header. sparse_filter_control_present_flag equal to 0 specifies that a set of syntax elements controlling the characteristics of the sparse de-noising filter is not present in the slice header and their inferred values are in effect.

[0081] qcs_control_present_flag equal to 1 specifies that a set of syntax elements controlling the characteristics of the quantization constraint set (QCS) filter is present in the slice header. qcs_control_present_flag equal to 0 specifies that a set of syntax elements controlling the characteristics of the quantization constraint set (QCS) filter is not present in the slice header and their inferred values are in effect.

[0082] disable_sparse_filter_flag specifies whether the operation of the sparse de-noising filter shall be disabled. When disable_sparse_filter_flag is not present in the slice header, disable_sparse_filter_flag shall be inferred to be equal to 0.

[0083] sparse_threshold specifies the value of threshold used in sparse de-noising. When sparse_threshold is not present in the slice header, the default value derived based on the slice quantization parameter is used.

[0084] sparse_transform_type specifies the type of the transform used in sparse de-noising. sparse_transform_type equal to 0 specifies that a 4×4 transform is used. sparse_transform_type equal to 1 specifies that a 8×8 transform is used.

[0085] adaptive_weighting_type specifies the type of weighting used in sparse de-noising. adaptive_weighting_type equal to 0 specifies that sparsity weighting is used. adaptive_weighting_type equal to 1 specifies that average weighting is used.

[0086] disable_qcs_flag specifies whether the operation of the quantization constraint set (QCS) filter shall be disabled. When disable_qcs_flag is not present in the slice header, disable_qcs_flag shall be inferred to be equal to 0.

[0087] qcs_pullback_model specifies how to re-assign the value of coefficients. qcs_pullback_model equal to 0 specifies to pull back the coefficients to the closest cell boundary (An example of pulling back to the closet cell (or quantization bin) boundary is shown in the last row of FIG. **9**, described below.). qcs_pullback_model equal to 1 specifies to pull back the coefficients to the center (also see FIG., if the quantized coefficient value is used instead) or predefined value of a cell.

[0088] In an embodiment, an adaptive sparse de-noising filter operation involves the following steps.

[0089] In one step, an over complete transform set H_i, i=1, . . . , M is determined. The information related to this particular set may be transmitted to the decoder. The information may be so transmitted at, for example, a slice, picture and/or sequence level. In transmitting such information, high level syntax may be embedded in the data stream. The high level syntax may be embedded, for example, at the slice, picture and/or sequence level. For example, within the framework of the MPEG-4 AVC Standard, we can reuse the existing 4×4 transform and 8×8 transform and/or the Hadamard transform step.

[0090] In another step, a threshold γ (for example, based on a quantization step and/or the statistics of the encoding picture) is determined. γ may be transmitted to the decoder. γ may be transmitted at, for example, a block, a slice, a picture and/or a sequence level. In transmitting such information, at least one block level syntax and/or at least one high level syntax may be embedded in the data stream.

[0091] In yet another step, the adaptive weighting method to combine the outcome of the inversed transforms, which may be transmitted to the decoder, is determined. The weights may be transmitted at, for example, a block a slice, picture and/or sequence level. In the event that the weighting is directly derived without explicit transmission thereof, there may still be a need to transmit some auxiliary information related to the weighting step. In transmitting any weighting step information, at least one block level syntax and/or at least one high level syntax may be embedded in the data stream. For example, average weighting or sparsity base weighting, which adapts the weights inverse of number of non-zero coefficients, can be used. Of course, the present principles are not limited to solely the preceding types of weighting and, thus, other types of weighting may also be used in accordance with the present principles, while maintaining the spirit of the present principles.

[0092] In an embodiment, an adaptive sparse de-noising filter methodology used for refinement involves obtaining the de-noised estimate $\hat{x}_i$ from each transform H_i using the specified threshold γ; and combining $\hat{x}_i$ using adaptive weightings to get the final de-noised estimate $\hat{x}$.

[0093] In an embodiment, a quantization constraint set methodology is used for a last refinement step as follows:

[0094] (1) Calculate the new residual signal $\hat{r}=\hat{x}-p$, where p is the intra/inter predicted signal.

[0095] (2) Apply the same transformation process on $\hat{r}$ that the MPEG-4 AVC Standard applies on the residual. Presume that the resulting transform coefficients are $\hat{c}$.

[0096] (3) Check if $\hat{c}$ is in the quantization cell indicated by the originally received transform coefficients. For each coefficient, if after the filtering steps, $\hat{c}$ has fallen outside its original quantization cell, the new coefficient is corrected and reassigned as the closest original quantization cell boundary value to itself. Alternatively, depending on the statistics of every particular coefficient and/or quantization bin, other possible values from within the original quantization cell can be used for the reassignment procedure. The refined coefficients are denoted as c'.

[0097] (4) Take the inverse transform of c', denoted by r', and sum together with p to obtain the final estimate x'=p+r'.

[0098] The adaptive sparse de-noising filtering is directed to recovering the original signal from an independent and identically distributed (i.i.d.) noisy environment. However, the quantization noise in video compression, and particularly with respect to the MPEG-4 AVC Standard, is usually not independent and identically distributed (i.i.d.). The present principles differ from the prior art in the use of a series of refinement steps (succession of filters) after, for example, the MPEG-4 AVC Standard deblocking filter, each oriented to correct at least one part of the coding artifacts. The signal after deblocking filter is a better match to the independent and identically distributed (i.i.d.) noise presumption. The possible "over filtering problem" resulting from the use and/or

combination of deblocking and de-noising filters is solved by the subsequent quantization constraint set (QCS) filter. The succession of filters has shown its superior performance in removing video compression artifacts, both in practice and theory.

[0099] Turning to FIG. **6**, an exemplary method for encoding image data using in-loop de-artifact filtering is indicated generally by the reference numeral **600**.

[0100] The method **600** includes a start block **605** that passes control to a function block **610**. The function block **610** encodes the current slice, and passes control to a function block **615**. The function block **615** decides whether or not a deblocking filter, a sparse de-noising filter, and/or quantization constraint set (QCS) will be applied to the current slice based on statistics of the current slice, and passes control to a decision block **620**. The decision block **620** determines whether or not disable_deblocking_filter_ids is equal to zero. If so, then control is passed to a function block **625**. Otherwise, control is passed to a decision block **630**.

[0101] The function block **625** applies a deblocking filter, and passes control to the decision block **630**.

[0102] The decision block **630** determines whether or not disable_sparse_filter_flag is equal to zero. If so, then control is passed to a function block **635**. Otherwise, control is passed to a decision block **640**.

[0103] The function block **635** applies the sparsity de-noising filter, and passes control to the decision block **640**.

[0104] The decision block **640** determines whether or not diable_qcs_flag is equal to zero. If so, then control is passed to a function block **645**. Otherwise, control is passed to an end block **699**.

[0105] The function block **645** applies the quantization constraint set (QCS), and passes control to the end block **699**.

[0106] Turning to FIG. **7**, an exemplary method for decoding image data using in-loop de-artifact filtering is indicated generally by the reference numeral **700**.

[0107] The method **700** includes a start block **705** that passes control to a function block **710**. The function block **710** parses the bitstream, decodes the syntax, and passes control to a function block **715**. The function block **715** decodes the current slice, and passes control to a decision block **720**. The decision block **720** determines whether or not diable_deblocking_filter_idc is equal to zero. If so, then control is passed to a function block **725**. Otherwise, control is passed to a decision block **730**.

[0108] The function block **725** applies the deblocking filter, and passes control to the decision block **730**.

[0109] The decision block **730** determines whether or not disable_sparse_filter_flag is equal to zero. If so, then control is passed to a function block **735**. Otherwise, control is passed to a decision block **740**.

[0110] The function block **735** applies the sparsity de-noising filter, and passes control to the decision block **740**.

[0111] The decision block **740** determines whether or not diable_qcs_flag is equal to zero. If so, then control is passed to a function block **745**. Otherwise, control is passed to an end block **799**.

[0112] The function block **745** applies a quantization constraint set (QCS), and passes control to the end block **799**.

[0113] Turning to FIG. **8**, an exemplary apparatus for performing quantization constraint set (QCS) coefficients correction after artifact removal/reduction is indicated generally by the reference numeral **800**. The apparatus **800** includes a combiner **805** having an output in signal communication with an input of a MPEG-4 AVC transformer **810**. An output of the MPEG-4 AVC Standard transformer **810** is connected in signal communication with a first input of a comparison and correction module **815**. An output of the comparison and correction module **815** is connected in signal communication with an input of a MPEG-4 AVC inverse transformer **820**. An output of the MPEG-4 AVC inverse transformer **820** is connected in signal communication with a first non-inverting input of a combiner **825**.

[0114] A non-inverting input of the combiner **805** is available as an input of the apparatus **800**, for receiving a reconstructed and filtered video picture. An inverting input of the combiner **805** is available as an input of the apparatus **800**, for receiving a predicted video picture. A second input of the compare and correct module **815** is available as an input of the apparatus **800**, for receiving quantization bins pattern. A third input of the compare and correct module **815** is available as an input of the apparatus **800**, for receiving decoded coefficients. A second non-inverting input of the combiner **825** is available as an input of the apparatus, for receiving a predicted video picture. An output of the combiner **825** is available as an output of the apparatus, for outputting a reconstructed and filtered and quantization constraint set (QCS) corrected video picture.

[0115] The MPEG-4 AVC transformer **810** is applied to the decoded residual. The MPEG-4 AVC inverse transformer **820** is applied to the decoded residual. The compare and correct module **815** compares the decoded and filtered pictures in the transform domain and corrects the coefficients that are over-filtered.

[0116] Turning to FIG. **9**, exemplary quantization bins for using QCS to correct an over-filtering problem in video encoding/decoding is indicated generally by the reference numeral **900**. Presume the original value is x, and the boundary value of the quantizer is y_i, i=0, 1, 2 . . . n, ... The particular bins are denoted by **910**, **920**, **930**, and **940**. In bin **910**, x is in the quantization bin of $(y_{n-1}, y_n]$. In bin **920**, after the quantization process in the encoder, the reconstruction value of x is x', which is in the quantization bin of $(y_{n-1}, y_n]$. In bin **930**, after the de-artifacting process, the filtered coefficient of x is x", which is in the quantization bin of $(y_n, y_{n+1}]$. However, the coefficient should not be outside the original quantization bin, which is $(y_{n-1}, y_n]$. In bin **940**, we apply the QCS process, and we set x' equal to y_n, which is the final reconstructed value.

[0117] A description will now be given of some of the many attendant advantages/features of the present invention, some of which have been mentioned above. For example, one advantage/feature is an apparatus that includes an encoder for encoding an image region. The encoder has at least two filters for successively performing in-loop filtering to respectively reduce at least a first and a second type of quantization artifact.

[0118] Another advantage/feature is the apparatus having the encoder that, in turn, has at least two filters as described above, wherein at least one of the at least two filters is used to enforce at least one compression constraint.

[0119] Yet another advantage/feature is the apparatus having the encoder that, in turn, has at least two filters wherein at least one of the at least two filters is used to enforce at least one compression constraint as described above, wherein the at least one compression constraint involves a quantization constraint set.

[0120] Still another advantage/feature is the apparatus having the encoder that, in turn, has at least two filters wherein at least one of the at least two filters is used to enforce at least one compression constraint as described above, wherein at least one of, enablement information or disablement information for the at least one compression constraint and side information corresponding to the image region to adaptively indicate parameters of the at least one compression constraint, is signaled using at least one of at least one high level syntax element and at least one block level syntax element.

[0121] Moreover, another advantage/feature is the apparatus having the encoder that, in turn, has at least two filters wherein at least one of the at least two filters is used to enforce at least one compression constraint as described above, wherein parameters of the at least one compression constraint is adaptively indicated based at least in part on at least one of data characteristics and data statistics corresponding to the image region.

[0122] Further, another advantage/feature is the apparatus having the encoder that, in turn, has at least two filters as described above, wherein at least one of the at least two filters includes a deblocking filter, a de-ringing filter, a de-noising filter, a signal estimation filter, a linear filter, and, a non-linear filter.

[0123] Also, another advantage/feature is the apparatus having the encoder that, in turn, has at least two filters as described above, wherein a total number, a type, and an order of implementation of the at least two filters is dynamically selectable.

[0124] Additionally, another advantage/feature is the apparatus having the encoder that, in turn, has at least two filters as described above, wherein at least one of the two or more filters is adaptively enabled or disabled depending upon at least one of data characteristics and data statistics corresponding to the image region.

[0125] Moreover, another advantage/feature is the apparatus having the encoder that, in turn, has at least two filters as described above, wherein enablement information or disablement information for at least one of the two or more filters is signaled using at least one of at least one high level syntax element and at least one block level syntax element.

[0126] Further, another advantage/feature is the apparatus having the encoder that, in turn, has at least two filters as described above, wherein the encoder transmits side information corresponding to the image region to adaptively indicate parameters of at least one of the two or more filters, the side information being transmitted at least one of a macroblock level, a slice level, a picture level, and a sequence level.

[0127] Also, another advantage/feature is the apparatus having the encoder that transmits side information as described above, wherein the parameters of the at least one of the two or more filters are adaptively tuned based at least in part on at least one of data characteristics and data statistics corresponding to the image region.

[0128] Additionally, another advantage/feature is the apparatus having the encoder that, in turn, has at least two filters as described above, wherein the two or more filters are included in a two-pass filter, the two-pass filter having a deblocking filter for performing a first pass to reduce blocking artifacts as the first type of quantization artifact and a sparse de-noising filter for performing a second pass to reduce noise as the second type of quantization artifact.

[0129] Moreover, another advantage/feature is the apparatus having the encoder that, in turn, has at least two filters wherein the two or more filters are included in a two-pass filter as described above, wherein the encoder enforces a quantization constraint set subsequent to the second pass.

[0130] Further, another advantage/feature is the apparatus having the encoder wherein the two or more filters are included in a two-pass filter as described above, wherein the encoder signals a quantization constraint process pullback method using at least one of at least one high level syntax element and at least one block level syntax element.

[0131] Also, another advantage/feature is the apparatus having the encoder wherein the two or more filters are included in a two-pass filter as described above, wherein the encoder signals at least one of a transform type, a threshold, and a weighting method for the sparse de-noising filter in at least one of at least one high level syntax element and at least one block level syntax element.

[0132] Additionally, another advantage/feature is the apparatus having the encoder that, in turn, has at least two filters as described above, wherein the at least two filters are in-loop filters corresponding to encoding the image region, and wherein a version of the image region that is displayed is different from at least one of an output signal corresponding to the image region after the at least two in-loop filters and the initial input signal corresponding to the image region before the at least two in-loop filters.

[0133] These and other features and advantages of the present principles may be readily ascertained by one of ordinary skill in the pertinent art based on the teachings herein. It is to be understood that the teachings of the present principles may be implemented in various forms of hardware, software, firmware, special purpose processors, or combinations thereof.

[0134] Most preferably, the teachings of the present principles are implemented as a combination of hardware and software. Moreover, the software may be implemented as an application program tangibly embodied on a program storage unit. The application program may be uploaded to, and executed by, a machine comprising any suitable architecture. Preferably, the machine is implemented on a computer platform having hardware such as one or more central processing units ("CPU"), a random access memory ("RAM"), and input/output ("I/O") interfaces. The computer platform may also include an operating system and microinstruction code. The various processes and functions described herein may be either part of the microinstruction code or part of the application program, or any combination thereof, which may be executed by a CPU. In addition, various other peripheral units may be connected to the computer platform such as an additional data storage unit and a printing unit.

[0135] It is to be further understood that, because some of the constituent system components and methods depicted in the accompanying drawings are preferably implemented in software, the actual connections between the system components or the process function blocks may differ depending upon the manner in which the present principles are programmed. Given the teachings herein, one of ordinary skill in the pertinent art will be able to contemplate these and similar implementations or configurations of the present principles.

[0136] Although the illustrative embodiments have been described herein with reference to the accompanying drawings, it is to be understood that the present principles is not limited to those precise embodiments, and that various changes and modifications may be effected therein by one of ordinary skill in the pertinent art without departing from the

scope or spirit of the present principles. All such changes and modifications are intended to be included within the scope of the present principles as set forth in the appended claims.

1. An apparatus, comprising:

an encoder for encoding an image region, the encoder having at least two filters for successively performing in-loop filtering to respectively reduce at least a first and a second type of quantization artifact.

2. The apparatus of claim **1**, wherein at least one of the at least two filters is used to enforce at least one compression constraint.

3. The apparatus of claim **1**, wherein at least one of the two or more filters is adaptively enabled or disabled depending upon at least one of data characteristics and data statistics corresponding to the image region.

4. The apparatus of claim **1**, wherein the two or more filters are comprised in a two-pass filter, the two-pass filter having a deblocking filter for performing a first pass to reduce blocking artifacts as the first type of quantization artifact and a sparse de-noising filter for performing a second pass to reduce noise as the second type of quantization artifact.

5. The apparatus of claim **1**, wherein said at least two filters are in-loop filters corresponding to encoding the image region, and wherein a version of the image region that is displayed is different from at least one of an output signal corresponding to the image region after the at least two in-loop filters and the initial input signal corresponding to the image region before the at least two in-loop filters.

6. A method, comprising:

encoding an image region, wherein the encoding step includes performing in-loop filtering to reduce at least a first and a second type of quantization artifact respectively using at least two filters in succession.

7. The method of claim **6**, wherein at least one of the at least two filters is used to enforce at least one compression constraint.

8. The method of claim **6**, wherein at least one of the two or more filters is adaptively enabled or disabled depending upon at least one of data characteristics and data statistics corresponding to the image region.

9. The method of claim **6**, wherein the two or more filters are comprised in a two-pass filter, the two-pass filter having a deblocking filter for performing a first pass to reduce blocking artifacts as the first type of quantization artifact and a sparse de-noising filter for performing a second pass to reduce noise as the second type of quantization artifact.

10. The method of claim **6**, wherein said at least two filters are in-loop filters corresponding to encoding the image region, and wherein a version of the image region that is displayed is different from at least one of an output signal corresponding to the image region after the at least two in-loop filters and the initial input signal corresponding to the image region before the at least two in-loop filters.

11. An apparatus, comprising:

a decoder for decoding an image region, the decoder having at least two filters for successively performing in-loop filtering to respectively reduce at least a first and a second type of quantization artifact.

12. The apparatus of claim **11**, wherein at least one of the at least two filters is used to enforce at least one compression constraint.

13. The apparatus of claim **11**, wherein at least one of the two or more filters is adaptively enabled or disabled depending upon at least one of data characteristics and data statistics corresponding to the image region.

14. The apparatus of claim **11**, wherein the two or more filters are comprised in a two-pass filter, the two-pass filter having a deblocking filter for performing a first pass to reduce blocking artifacts as the first type of quantization artifact and a sparse de-noising filter for performing a second pass to reduce noise as the second type of quantization artifact.

15. The apparatus of claim **11**, wherein said at least two filters are in-loop filters corresponding to decoding the image region, and wherein a version of the image region that is displayed is different from at least one of an output signal corresponding to the image region after the at least two in-loop filters and the initial input signal corresponding to the image region before the at least two in-loop filters.

16. A method, comprising:

decoding an image region, wherein the decoding step includes performing in-loop filtering to reduce at least a first and a second type of quantization artifact respectively using at least two filters in succession.

17. The method of claim **16**, wherein at least one of the at least two filters is used to enforce at least one compression constraint.

18. The method of claim **16**, wherein at least one of the two or more filters is adaptively enabled or disabled depending upon at least one of data characteristics and data statistics corresponding to the image region.

19. The method of claim **16**, wherein the two or more filters are comprised in a two-pass filter, the two-pass filter having a deblocking filter for performing a first pass to reduce blocking artifacts as the first type of quantization artifact and a sparse de-noising filter for performing a second pass to reduce noise as the second type of quantization artifact.

20. The method of claim **16**, wherein said at least two filters are in-loop filters corresponding to decoding the image region, and wherein a version of the image region that is displayed is different from at least one of an output signal corresponding to the image region after the at least two in-loop filters and the initial input signal corresponding to the image region before the at least two in-loop filters.

21. A storage media having video signal data encoded thereupon, comprising:

an image region field, encoded using at least two filters for successively performing in-loop filtering to respectively reduce at least a first and a second type of quantization artifact.

22. The storage media of claim **21**, wherein at least one of the at least two filters is used to enforce at least one compression constraint.

23. The storage media of claim **22**, wherein the at least one compression constraint involves a quantization constraint set.

24. The storage media of claim **21**, wherein at least one of the two filters is adaptively enabled or disabled depending upon at least one of data characteristics and data statistics corresponding to the image region.

25. The storage media of claim **21**, wherein enablement information and/or disablement information for at least one of the two filters is signaled using at least one of a high level syntax element and a block level syntax element.

* * * * *