UNITED STATES PATENT AND TRADEMARK OFFICE

BEFORE THE PATENT TRIAL AND APPEAL BOARD

SAMSUNG ELECTRONICS CO., LTD.,
Petitioner

v.

WILUS INSTITUTE OF STANDARDS AND TECHNOLOGY INC.,
Patent Owner

Case IPR2025-01164
U.S. Patent No. 12,004,262

PETITIONER'S MOTION TO SUBMIT SUPPLEMENTAL INFORMATION PURSUANT TO 37 C.F.R. § 42.123(a)

LIST OF EXHIBITS

SAMSUNG-1001	U.S. Patent No. 12,004,262 ("the '262 Patent")
SAMSUNG-1002	File History of the '262 Patent
SAMSUNG-1003	Declaration and Curriculum Vitae of Dr. Christopher J. Hansen, Ph.D.
SAMSUNG-1004	Complaint, *Wilus Institute of Standards and Technology Inc., v. Samsung Electronics Co., LTD., et al*, 2:25-cv-00070 (E.D. Tex.), filed January 23, 2025
SAMSUNG-1005	IEEE P802.11ax/D1.0, IEEE Computer Society (November 2016), ("802.11ax/D1.0")
SAMSUNG-1006	U.S. Patent Publication No. 2017/0367129 A1 to Yang ("Yang")
SAMSUNG-1007	Patil et. al, IEEE 802.11-17/0250r2 (March 2017) ("802.11-17/0250r2")
SAMSUNG-1008	Patil et al, IEEE 802.11-16/1415r0 (November 2016) ("802.11-16/1415r0")
SAMSUNG-1009	U.S. Patent Publication No. 2018/0048427 A1 to Lou, et al. ("Lou")
SAMSUNG-1010	IEEE Std 802.11-2016, IEEE Standard for Information Technology—Telecommunications and information exchange between systems, Local and metropolitan area networks—Specific requirements - Part 11: Wireless LAN Medium Access Control (MAC) and Physical Layer (PHY) Specifications, IEEE Computer Society (December 2016) ("802.11-2016")
SAMSUNG-1011	Patil et al., IEEE 802.11-17-0230r1 (March 2017) ("802.11-17-0230r1")

SAMSUNG-1012	Official IEEE 802.11 Working Group Project Timelines, https://ieee802.org/11/Reports/802.11_Timelines.htm
SAMSUNG-1013	Stanley, IEEE 802.11-16-1094r2 (September 2016)
SAMSUNG-1014	IEEE P802.11-REVmc/D8.0, IEEE Computer Society (August 2016) ("P802.11-REVmc/D8.0")
SAMSUNG-1015	Second Declaration and Curriculum Vitae of Dr. Christopher J. Hansen, Ph.D.
SAMSUNG-1016	Declaration of June Ann Munford
SAMSUNG-1017	*Fintiv* Stipulation
SAMSUNG-1018	Supplemental Public Accessibility Declaration of Dr. Christopher J. Hansen, Ph.D.
SAMSUNG-1019	IPR2025-01164 Email from Board Authorizing Petitioner's Motion to Submit Supplemental Information

SAMSUNG-1020-1105 RESERVED

SAMSUNG-1106	Order Granting Stay in *Maxeon Solar PTE. LTD. v. Hanwha Solutions Corp.*, No. 2:24-CV-00262-JRG (E.D. Tex. May 5, 2025) (Gilstrap, J.)
SAMSUNG-1107	Order Granting Stay in *Cellspin Soft, Inc. v. Bytedance Ltd.,* No. 2:23-CV-00496-JRG-RSP (E.D. Tex. Jan. 26, 2025) (Payne, J.)
SAMSUNG-1108	Motion Success for Stay Pending IPR (Post-Institution) (E.D. Tex.), DOCKETNAVIGATOR (last visited August 27, 2025)
SAMSUNG-1109	RESERVED
SAMSUNG-1110	RESERVED
SAMSUNG-1111	U.S. District Court for the Eastern District of Texas

	Calendar Events Set for 8/17/2026 for Judge Rodney Gilstrap
SAMSUNG-1112	RESERVED
SAMSUNG-1113	Wi-Fi 6 Patent Brochure, SISVEL (Mar. 21, 2025), https://www.sisvel.com/xlin7ipl485u/1kNkzUZptdvqKbYiX1DSfi/f518e18ee158be974d3c83f7cd7173be/Wi-Fi_6_Pool_patent_brochure.pdf
SAMSUNG-1114-1121 RESERVED	
SAMSUNG-1122	U.S. District Court – Judicial Caseload Profile (E.D. Tex), ADMIN. OFF. U.S. CTS. (June 2025)
SAMSUNG-1123-1128 RESERVED	
SAMSUNG-1129	Letter re "Notice of Wi-Fi 6 license offer – Follow-up to our letter dated April 08, 2022 and follow-up communications" from Sisvel to Samsung Electronics Co., Ltd. with Attachments 1-3, October 25, 2023
SAMSUNG-1130	IEEE 802.11-16/1415r2; IEEE P802.11—Wireless LANs; Author(s): Abhishek et al.; Affiliation: Qualcomm; Nov. 2016. (Year: 2016) ("Abhisehk 1")
SAMSUNG-1131	IEEE P802.11 Wireless LANs; Proposed resolution for comments related to Section 27.11.4 (BSS Color; Author(s): Abhishek et al.; Affiliation: Qual-comm; Mar. 2017. (Year: 2017) ("Abhisehk 2")
SAMSUNG-1132	Decision Referring Petitions to the Board, IPR2025-00933, IPR2025-00934, IPR2025-00988, IPR2025-01043, IPR2025-01044, IPR2025-01069, IPR2025-01110, IPR2025-01111, Paper 11, (P.T.A.B. Oct. 2025)
SAMSUNG-1133	Decision Referring Petitions to the Board, IPR2025-00935, IPR-2025-00936, Paper 12, (P.T.A.B. Sept. 2025)
SAMSUNG-1134	Email to James Tsuei dated November 13, 2025 re P.R. 4-2 disclosure from Petitioner's District Court Counsel

SAMSUNG-1135	Defendants' P.R. 4-1 Exchange of Proposed Terms and Claim Elements for Construction

I. Introduction

Pursuant to 37 C.F.R. § 42.123(a) and the Board's authorization (SAMSUNG-1019), Petitioner hereby moves to submit Exhibit SAMSUNG-1018 ("Supplemental Public Accessibility Declaration of Dr. Christopher J. Hansen, Ph.D.") as supplemental information in the record of IPR2025-01164.[1]

Petitioner's motion to submit supplemental information should be granted because it meets the basic requirements of 37 C.F.R. § 42.123(a). Specifically, Petitioner timely requested authorization for this motion within one month of the Institution Decision. *See* Paper 15. Dr. Hansen's supplemental declaration (SAMSUNG-1018) is also relevant to at least one claim for which trial has been instituted.

As explained below, SAMSUNG-1018 is a supplemental declaration that includes sworn testimony and contemporaneous evidence concerning the public accessibility of 802.11ax/D1.0 (SAMSUNG-1005). Grounds 1A and 1B rely on 802.11ax/D1.0 to show that claims 1-4 of the '262 Patent were obvious. SAMSUNG-1018 is therefore relevant to the Petition's obviousness showings with respect to each of claims 1-4.

SAMSUNG-1018 supplements other information submitted with the Petition, including Dr. Hansen's first public accessibility declaration (SAMSUNG-1015),

[1] A copy of SAMSUNG-1018 is also attached to this motion.

that addressed the public accessibility of 802.11ax/D1.0. Although the evidence submitted with the Petition is sufficient on its own to establish that 802.11ax/D1.0 was a prior art printed publication, the supplemental information provided in SAMSUNG-1018 expands on this evidence and further demonstrates that 802.11ax/D1.0 was publicly accessible to a POSITA before the Critical Date of the ’262 Patent (April 14, 2017).

For each of the reasons described herein, Samsung’s motion should be granted and SAMSUNG-1018 should be admitted as supplemental information.

II. Background

On June 30, 2025, Petitioner filed a Petition for *inter partes* review of claims 1-4 of the ’262 Patent. On January 9, 2026, the Board instituted a trial on these claims, having determined in a summary notice granting institution that there is “a reasonable likelihood of prevailing with respect to at least one of the claims challenged in the petition.” Paper 15, 3. Petitioner notes that, in an earlier related IPR proceeding involving the same parties and similarly involving grounds that rely on the 802.11ax/D1.0 reference (referred to in that proceeding as the 802.11ax_D1.0 reference), the Board stated it “would like to see further development of [the public accessibility of the 802.11ax_D1.0 reference] issue during trial,” noting that “[t]he current record is not well-developed on this issue either factually or legally.”

IPR2025-00934, Paper 12, 14 (PTAB Nov. 3, 2025). Petitioner was granted authorization to file a motion for supplemental information in IPR2025-00934, and the Board granted Petitioner's motion to enter as supplemental information a supplemental public accessibility declaration from Dr. Christopher Hansen that was substantially similar to the declaration that Petitioner presents with its motion in this proceeding (SAMSUNG-1018). IPR2025-00934, Paper 23 (PTAB Feb. 6, 2026).

Petitioner timely requested authorization to file this motion in IPR2025-01164 on February 6, 2026, within one month of institution (January 9, 2026). The Board subsequently authorized Petitioner on February 11, 2026, to file a motion to submit supplemental information. *See* SAMSUNG-1019. Per the Board's authorization, Petitioner hereby moves to submit SAMSUNG-1018.

III. Argument

Under 37 C.F.R. § 42.123(a), a motion to submit supplemental information has the following two requirements: (1) "[a] request for the authorization to file a motion to submit supplemental information is made within one month of the date the trial is instituted"; and (2) the "information must be relevant to a claim for which the trial has been instituted." This motion meets both prongs of § 42.123(a).

A. The Request is Timely

As discussed above, Petitioner requested authorization to file this motion on February 6, 2026, within one month of the institution decision.

B. SAMSUNG-1018 is Relevant to Instituted Claims

Petitioner seeks to provide further information supporting the public accessibility of 802.11ax/D1.0, which is relied on as prior art for Grounds 1A and 1B. Ground 1A and Ground 1B each challenges claims 1-4 of the ’262 Patent. Dr. Hansen’s testimony informs the analysis of public accessibility of 802.11ax/D1.0 set forth in the Petition and, therefore, SAMSUNG-1018 is relevant to at least claims 1-4 for which trial has been instituted.

C. Petitioner’s Submission of SAMSUNG-1018 Would Not Change the Grounds

The information provided in SAMSUNG-1018 does not change the Grounds offered in the Petition. *Palo Alto Network, Inc. v. Juniper Networks, Inc*., IPR2013-00369, Paper 37, 3 (PTAB Feb. 5, 2014). Rather, the information is relevant to the limited issue of public accessibility of 802.11ax/D1.0, which is an issue relevant to, but that does not change, the instituted grounds or the claims challenged in the Petition. Therefore, there is no risk that submission of SAMSUNG-1018 would introduce new issues not already raised in the Petition, as the issue of public accessibility of 802.11ax/D1.0 was first raised in the Petition. The information presented in SAMSUNG-1018 is relevant to this same issue.

D. Petitioner’s Submission of SAMSUNG-1018 Would Not Interfere with the Just, Speedy, and Inexpensive Resolution of this Proceeding

The information provided in SAMSUNG-1018 also would not interfere with

the just, speedy, and inexpensive resolution of this proceeding. *Palo Alto* at 4. Petitioner brings this motion at an early stage of the proceeding just a month after institution and long before the Patent Owner Response deadline (April 3, 2026). Acceptance of the submission of SAMSUNG-1018 now would permit early consideration of the supplemental information and either obviate the need for, or allow more efficient, briefing on the issue of 802.11ax/D1.0's public accessibility. Indeed, authorization of Petitioner's motion and entry of the supplemental information would ensure Patent Owner has a fair opportunity to cross-examine Dr. Hansen before its Patent Owner Response, and would ensure Patent Owner has a fair opportunity to develop and submit rebuttal evidence with its Patent Owner Response. Petitioner's supplemental information would thus promote a just and speedy resolution of the instituted IPR.

E. Submission of SAMSUNG-1018 Would Not Prejudice Patent Owner

In authorizing filing of this motion, the Board also authorized Patent Owner to file an Opposition to the Motion within 5 days. SAMSUNG-1019. But Patent Owner's Response is not due until April 3, 2026. As explained above, Patent Owner has not taken any depositions. Accordingly, Patent Owner has more than sufficient time to review and respond to the limited information provided in SAMSUNG-1018 on the narrow issue of the public accessibility of 802.11ax/D1.0 in the current time

period allotted for Patent Owner's Response. *Palo Alto* at 5.

F. Numerous Cases Support Granting Petitioner's Motion

The Board has routinely granted motions for supplemental information under similar circumstances. *Palo Alto*, Paper 37 (PTAB Feb. 5, 2014); *Inergy Technology, Inc. v. Force MOS Technology Co.*, Ltd., IPR2024-00094, Paper 14 (PTAB Jul. 19, 2024); *Creston Electronics, Inc. v. Intuitive Building Controls, Inc.*, IPR2015-01379, Paper 27 (PTAB Feb. 2, 2016); *Samsung Electronics Co., Ltd. v. Maxell, Ltd.*, IPR2024-00906, Paper 35 (PTAB Sept. 5, 2025); *Charter Communications, Inc. v. Iarnach Technologies Ltd.*, IPR2024-01287, Paper 19 (PTAB May 7, 2025); *Inergy Technology, Inc. v. Force Mos Technology Co., Ltd.*, IPR2024-00094, Paper 14 (PTAB Jul. 19, 2024); *Evapco Dry Cooling, Inc. v. SPG Dry Cooling USA LLC*, IPR2021-00687, Paper 24 (PTAB Jan. 18, 2022); *Group III International, Inc. v. Targus International LLC*, IPR2021-00371, Paper 34 (PTAB Sept. 17, 2021).

Most recently, the Board granted Petitioner's motion for supplemental information in a related proceeding between the parties. IPR2025-00934, Paper 23 (PTAB February 6, 2026). Notably, Petitioner's motion in IPR2025-00934 is nearly identical to Petitioner's instant motion, similarly requesting admission of a supplemental declaration from Dr. Hansen relating to the public accessibility of the 802.11ax_D1.0 (802.11ax/D1.0) reference. Petitioner's instant motion relies on the same reasoning as its earlier request.

Moreover, in *Palo Alto*, the Board determined that the supplemental information petitioner sought to submit "relates to the claims for which trial has been instituted because it is directed to the public accessibility of the [prior art] references" that "serve as the basis for the grounds of unpatentability authorized" in the proceeding, which is "relevant to the claims of the [challenged patent] for which this trial was instituted." *Palo Alto* at 3. The same is true for Petitioner's instant request where Petitioner seeks to submit supplemental information that relates to the claims for which trial has been instituted (*i.e.*, claims 1-4) because it is related to the public accessibility of 802.11ax/D1.0, a reference that serves as the basis of Grounds 1A and 1B, which are directed to claims 1-4. *Id.*

IV. Conclusion

For the foregoing reasons, Petitioner requests grant of this motion to submit SAMSUNG-1018 as supplemental information and entry of the same into evidence.

Respectfully submitted,

Dated 02/17/2026

/Nicholas W. Stephens/

W. Karl Renner, Reg. No. 41,265
Jeremy J. Monaldo, Reg. No. 58,680
Nicholas Stephens, Reg. No. 74,320
Richard Wong, Reg. No. 73,259
Fish & Richardson P.C.
60 South Sixth Street, Suite 3200
Minneapolis, MN 55402
T: 202-783-5070
F: 877-769-7945

Attorneys for Petitioner

CERTIFICATE OF SERVICE

Pursuant to 37 CFR §§ 42.6(e)(4) and 42.205(b), the undersigned certifies that on February 17, 2026, a complete and entire copy of this Petitioner's Motion to Submit Supplemental Information and Accompanying Exhibits were provided by email to the Patent Owner by serving the correspondence email address of record as follows:

Reza Mirzaie
Neil A. Rubin
Philip X. Wang
Linjun Xu
RUSS, AUGUST & KABAT
12424 Wilshire Boulevard, 12th Floor
Los Angeles, CA 90025

Email: rak_wilus@raklaw.com
rmirzaie@raklaw.com
nrubin@raklaw.com
pwang@raklaw.com
lxu@raklaw.com

/Diana Bradley/

Diana Bradley
Fish & Richardson P.C.
60 South Sixth Street, Suite 3200
Minneapolis, MN 55402
bradley@fr.com

IN THE UNITED STATES PATENT AND TRADEMARK OFFICE

In re Patent of:	Juhyung Son, et al.	Attorney Docket No. 39843-0201IP1
U.S. Patent No.:	12,004,262	
Issue Date:	June 4, 2024	
Appl. Serial No.:	17/670,419	
Filing Date:	February 11, 2022	
Title:	WIRELESS COMMUNICATION METHOD USING BSS IDENTIFIER AND WIRELESS COMMUNICATION TERMINAL USING SAME	

SUPPLEMENTAL PUBLIC ACCESSIBILITY DECLARATION OF CHRISTOPHER HANSEN, PH.D.

I declare that all statements made herein on my own knowledge are true and that all statements made on information and belief are believed to be true, and further, that these statements were made with the knowledge that willful false statements and the like so made are punishable under Section 1001 of Title 18 of the United States Code.

Date: February 16, 2026

By: _____
Christopher Hansen

SAMSUNG 1018
Samsung v. Wilus
IPR2025-01164

TABLE OF CONTENTS

I. Contents of this Declaration 4

II. Public Accessibility of 802.11ax/D1.0 7

A. 802.11 Operations Manual 7

B. 802.11 Email Reflector 11

C. IEEE 802.11 Plenary Session – November 7-14, 2016 15

D. RFC 7241: The IEEE 802/IETF Relationship 16

E. First-Hand Experience.....18

III. Conclusion.....19

LIST OF APPENDICES

Appendix CA	IEEE 802.11 Wireless Local Area Networks (WLANs) Operations Manual www.ieee.org/11 (date July 30, 2016)
Appendix CB	IEEE 802.11 Email Reflector Landing Page
Appendix CC	IEEE 802.11 Email Download Page
Appendix CD	IEEE 802.11 Email Announcement of 802.11ax/D1.0 Draft
Appendix CE	IEEE 802.11 November 2016 Meeting Agenda
Appendix CF	IEEE 802.11 November 2016 Meeting Minutes
Appendix CG	RFC 7241: Internet Architecture Board, The IEEE 802/IETF Relationship, https://www.rfc-editor.org/info/rfc7241 (dated July 2014)
Appendix CH	Hansen Email to Students
Appendix CI	Institution Decision (IPR2025-00934)
Appendix CJ	IEEE 802.11 Summary Reports & Minutes of 802.11 WG Sessions, https://www.ieee802.org/11/Reports/index.html

I, Christopher Hansen, do hereby declare the following:

1. I submit this Declaration at the request of Samsung Electronics Co., Ltd. ("Samsung" or "Petitioner") for consideration by the Patent Trial and Appeal Board in IPR2025-01164.

2. I reside in Los Altos, California.

3. I am over eighteen years of age, and I am otherwise competent to testify as to the matters set forth herein if I am called upon to do so.

4. I am being compensated for my time at my standard consulting rate. I am also being reimbursed for expenses that I incur during the course of this work. My compensation is not contingent upon the results of my study and analysis, the substance of my testimony, or the outcome of any proceeding involving the challenged patent or patents. I have no financial interest in the outcome of this matter or in any litigation involving the challenged patent or patents.

I. CONTENTS OF THIS DECLARATION

5. This declaration supplements the Public Accessibility Declaration I provided in IPR2025-01164 (Ex. 1015) ("Second Declaration of Christopher Hansen, Ph.D. Regarding Public Accessibility of Prior Art References") (hereinafter, "First Public Accessibility Declaration"). The contents of my First Public Accessibility Declaration are incorporated by reference in this Supplemental Public Accessibility Declaration.

6. I have reviewed the Preliminary Response ("POPR") that Patent Owner submitted in IPR2025-01164. Patent Owner argues in the POPR that the evidence submitted with the Petition, which included my First Public Accessibility Declaration, fails to adequately establish that 802.11ax/D1.0 (Ex. 1005, "D1.0") was publicly accessible before the Critical Date of the '262 Patent (April 14, 2017). I disagree. Patent Owner's arguments do not address substantial portions of the analysis in my First Public Accessibility Declaration. For example, the POPR focuses on one aspect of public accessibility—the public accessibility of D1.0 by voting members of the 802.11 Working Group. But D1.0 was available to members of other working groups and even to non-voting members as well. Indeed, IEEE policy was specifically designed to promote distribution and access to draft amendments like D1.0 well beyond the rank of 802.11 voting members. IEEE 802.11ax drafts were also available upon request.

7. I have also reviewed the Board's decision granting institution of *inter partes* review in related IPR2025-00934. *See* Appendix CI. In that Institution Decision, I understand that the Board urged the parties to further develop evidence and arguments concerning the public accessibility of the same D1.0 reference. There, the Board cited to my First Public Accessibility Declaration in IPR2025-00934 where I noted "that the cover of D1.0 grants permission to reproduce the document to others for consideration." Appendix CI (citing Ex. 1026 ¶ 72 and

quoting Ex. 1004 at 1 ("Permission is hereby granted for IEEE Standards Committee participants to reproduce this document for purposes of international standardization consideration.")). The Board also correctly pointed out that the IEEE meetings were open to the public. *Id*. (citing Ex. 1026, ¶ 58 and Appendix J). My First Public Accessibility Declaration in this IPR also includes these observations. Ex. 1015 ¶¶ 51, 65.

8. In this Supplemental Public Accessibility Declaration, I discuss further documentation regarding public accessibility of D1.0. Specifically, I discuss documentary evidence that supports the following points:

a. That "Aspirant" IEEE members (i.e., individuals who were Active 802.11 participants but not voting members of the Working Group) were informed of and given immediate access to D1.0 upon its release;

b. That members of the general public could become Aspirant members by attending only one session (*e.g.*, a single IEEE 802.11 Working Group meeting), and were given access to the document server that stored draft standards documents like D1.0 immediately upon attending a session and qualifying as an Aspirant;

c. That the IEEE leadership informed interested parties of the availability of D1.0; and

d. That D1.0 was intended to be shared outside of the Working Group, and the draft was available to interested parties upon request.

9. Documents that support the above facts on public accessibility of D1.0 includes those listed in the table below. True and correct copies of the listed documents are attached as appendices to this Declaration:

Appendix CA	IEEE 802.11 Wireless Local Area Networks (WLANs) Operations Manual www.ieee.org/11 (date July 30, 2016)
Appendix CB	IEEE 802.11 Email Reflector Landing Page
Appendix CC	IEEE 802.11 Email Download Page
Appendix CD	IEEE 802.11 Email Announcement of 802.11ax/D1.0 Draft
Appendix CE	IEEE 802.11 November 2016 Meeting Agenda
Appendix CF	IEEE 802.11 November 2016 Meeting Minutes
Appendix CG	RFC 7241: Internet Architecture Board, The IEEE 802/IETF Relationship, https://www.rfc-editor.org/info/rfc7241 (dated July 2014)
Appendix CH	Hansen Email to Students
Appendix CJ	IEEE 802.11 Summary Reports & Minutes of 802.11 WG Sessions, https://www.ieee802.org/11/Reports/index.html

II. PUBLIC ACCESSIBILITY OF 802.11AX/D1.0

A. 802.11 Operations Manual

10. The 802.11 Operations Manual (Appendix CA) is a publicly accessible document available at https://mentor.ieee.org/802.11/dcn/14/11-14-

0629-16-0000-802-11-operations-manual.docx. The 802.11 Operations Manual attached as Appendix CA is a true and accurate copy.

11. The 802.11 Operations Manual sets forth certain definitions, procedures, and rules pertaining to the accessibility of drafts such as 802.11ax/D1.0. Specifically, the 802.11 Operations Manual states that access to drafts was provided online as follows:

> ***8.4 Private Members-only Document Server***
>
> Access to drafts and related documentation is provided on the private area of the 802.11 website http://www.ieee802.org/11/private/index.shtml. Active 802.11 participants are entitled to access the private area.
>
> Credentials will be emailed to new active 802.11 participants after the session in which they become an active 802.11 participant. These credentials are updated once a year.
>
> Access to drafts is provided to all attendees at an 802.11 plenary or interim session.

802.11 Operations Manual § 8.4 (annotated)

12. As stated in Section 8.4, drafts were provided in the private area of the 802.11 website, but private does not mean that the drafts were closely held or that there were significant restrictions to access the so-called private area. In fact, all Active 802.11 participants were entitled access to that area, and as I discuss below, any interested member of the public could readily become an Active 802.11 participant, thereby obtaining access to the private area. In addition, the 802.11 Operations Manual states that "Access to drafts is provided to all attendees at an 802.11 plenary or interim session." *Id*. New Active 802.11 participants were

provided credentials immediately after attending their first session.

13. The 802.11 Operations Manual also describes how communications were handled:

> **8 Access to: Email lists, Teleconferences, Document server and the 802.11Drafts**
>
> ***8.1 Email lists***
>
> The WG maintains an email list on which all meetings and ballots are announced, and which is used for discussion of matters relevant to all 802.11 participants (STDS-802-11@LISTSERV.IEEE.ORG). In addition a separate list is provided for each active subgroup.
>
> Any Active 802.11 participant or Former-Voter is entitled to be a member of any of these Email lists. The 802.11 website provides links to allow an Active 802.11 participant or Former-Voter to manage this access. An Active 802.11 participant or Former-Voter that desires access to the IEEE 802.11 WG email reflector(s) may submit a request for such access using the web-based IEEE 802.11 reflector request http://www.ieee802.org/11/Reflector.html.
>
> Postings to any of these lists are restricted to list members, i.e., only a member of a list (identified by email address) can post to that list.
>
> The WG also maintains a read-only reflector, to which all emails to the main WG list are copied. Anyone can join this list. Members of this list cannot post to the list.

802.11 Operations Manual § 8.1 (annotated)

As discussed in the 802.11 Operations Manual at Section 8.1, any "Active 802.11 participant" (not just voting members of the Working Group) was entitled to be a member of any of the Email lists, including the STDS-802.11 listserv.

14. The 802.11 Operations Manual defines "Active 802.11 participant" as "a participant with status Aspirant, Potential-Voter, Voter or a Former-Voter who is a member of an active 802.11 WG balloting pool." 802.11 Operations Manual at

8.[1] Thus, an "Aspirant" was considered to be an Active 802.11 participant.

15. The 802.11 Operations Manual specifies that "a Non-Voter who properly attends a session becomes an Aspirant member at the end of that session." 802.11 Operations Manual §§ 7.1.1-7.1.2.

7.1.1 Non-Voter

A Non-Voter is a participant who is described by one or more of the following:

- Is attending a session for the first time.
- Never gained any other participant status (i.e. attends some meeting slots, but never enough to "properly attend" a session)
- Gained some other status, but lost it due to failing to properly attend 1 of 4 consecutive plenaries (one of which may be substituted by an interim)
- Gained voting status, and failed to return the required mandatory WG letter ballots

A Non-Voter who properly attends a session becomes an Aspirant member at the end of that session.

A Non-Voter can only gain voting status by following the transition: Aspirant->Potential Voter->Voter. Any previous attendances do not count towards this.

7.1.2 Aspirant

An Aspirant becomes a Potential Voter at the close of the second properly attended session.

Failure to properly attend 1 of 4 consecutive plenary sessions (a single interim session may be substituted for a plenary) results in the Aspirant becoming a non-voter.

802.11 Operations Manual §§ 7.1.1-7.1.2 (annotated)

---

[1] 802.11 Operations Manual distinguished between Active 802.11 participants and Former Voters. Thus, the definition of an Active 802.11 participant includes a Former-Voter who was still a member of an active 802.11 WG ballot pool (as opposed to a Former-Voter who was not a member of an active 802.11 WG ballot pool).

The term "session" includes a plenary session or interim session. *Id.*, §§ 3.6, 7.1.2. An example of a plenary session is the Plenary Session held in San Antonio, Texas from November 7-14, 2016, where the imminent release of D1.0 was discussed. IEEE 802.11 Plenary Session Meeting Minutes at 2, 16. Additionally, an Interim Session was held January 16-20, 2017 in Atlanta, Georgia, and a Plenary Session was held March 13-17, 2017 in Vancouver, Canada. Any interested member of the public thus could have become an Aspirant member before the earliest priority date of the '262 Patent (April 14, 2017) by attending either the January 2017 or March 2017 sessions. Appendix CJ.

16. As mentioned in the 802.11 Operations Manual, credentials for accessing the private area were provided to all new active 802.11 participants after the session in which they become an active 802.11 participant:

> ***8.4 Private Members-only Document Server***
>
> Access to drafts and related documentation is provided on the private area of the 802.11 website http://www.ieee802.org/11/private/index.shtml. Active 802.11 participants are entitled to access the private area.
>
> Credentials will be emailed to new active 802.11 participants after the session in which they become an active 802.11 participant. These credentials are updated once a year.
>
> Access to drafts is provided to all attendees at an 802.11 plenary or interim session.

802.11 Operations Manual § 8.4 (annotated)

B. 802.11 Email Reflector

17. As discussed in the 802.11 Operations Manual, the "availability of the

draft … must be announced on the 802.11 WG email reflector during or prior to the meeting slot in which approval of any WG ballot on the draft is considered." 802.11 Operations Manual § 3.9.2. "An Active 802.11 participant or Former-Voter that desires access to the IEEE 802.11 WG email reflector(s) may submit a request for such access using the web-based IEEE 802.11 reflector request http://www.ieee802.org/11/Reflector.html." *Id.*, § 8.1.

18. Consistent with the requirements laid out in the 802.11 Operations Manual, release of D1.0 for letter ballot was announced on December 1, 2016 via an email distributed to the STDS-802-11 listserv:

[STDS-802-11] IEEE 802.11 Mandatory Technical Letter Ballot 225 for P802.11ax Draft 1.0 Starts Today

- *To*: STDS-802-11@xxxxxxxxxxxxxxxx
- *Subject*: [STDS-802-11] IEEE 802.11 Mandatory Technical Letter Ballot 225 for P802.11ax Draft 1.0 Starts Today
- *From*: Adrian Stephens <adrian.p.stephens@xxxxxxxx>
- *Date*: Thu, 1 Dec 2016 19:16:52 +0000

--- This message came from the IEEE 802.11 Working Group Reflector ---

IEEE 802.11(TM) Letter Ballot 225

To: IEEE 802.11 Voters,

With this email, the 802.11 Working Group is officially beginning WG Technical Letter Ballot 225 (LB225), which is a Letter Ballot on the question "Should P802.11ax D1.0 be forwarded to Sponsor Ballot?".

This Letter Ballot opens Thu Dec 01, 2016 at 23:59 Eastern Time USA (11:59PM) and will close 30 days later on Sat Dec 31, 2016 at 23:59 Eastern Time USA (11:59pm). All necessary documents are available in the instructions that can be found on the IEEE 802.11 web site at http://www.ieee802.org/11/LetterBallots/LB225ax/LB225_instructions.html.

Important:
o This is a 30-day Technical letter ballot and the ballot group (i.e., those that may vote) for this ballot is all IEEE 802.11 voter members as of the start of this letter ballot. o All current voter members of 802.11 are required to vote on this ballot series. o If you cast a "Do not approve" vote on this ballot, it must be accompanied by comments for your vote to be valid. o You must follow these instructions to vote. Do not send an email to vote. Voting by any method other than the web-based process described here will invalidate your vote. o Failure to follow these instructions will result in your vote being discarded as an invalid vote. o Not voting on a letter ballot series or sending an invalid vote can affect your voting privileges. o The draft is password protected in accordance with IEEE 802 Policies and Procedures. To obtain the draft, use the username and the password supplied to active members for the 802.11 WG private area.

(The attached file contains a reminder set for 4 days before the close of the ballot. You may find it helpful to import this into or open this with your calendar client in order to get an automated reminder.)

Thank you for participating in Letter Ballot 225.

Adrian Stephens, IEEE 802.11 Working Group Chair
E-mail: Adrian.P.Stephens@xxxxxxxx

Osama Aboul-Magd, IEEE 802.11 TGax Chair
E-mail: Osama.AboulMagd@xxxxxxxxxx

Appendix CD

The email was sent to the STDS-802-11 listserv consistent with the 802.11 Operations Manual. The email alerts the listserv registrants that D1.0 was available online as of December 1, 2016. The email also states, "To obtain the draft, use the username and the password supplied to active members for the

802.11 WG private area." Appendix CD.

19. I was able to retrieve this email via the publicly facing Email Reflector at https://grouper.ieee.org/groups/802/11/Reflector.html:

Email Reflector Request

Member access

If you are an 802.11 participant, use the form below to request access (subscribe) to the 802.11 email reflectors.

If you are not an 802.11 participant, do not fill in the form.

You can check whether or not you are a participant by looking for your name here. If you are listed you are a participant.

Subscriptions to and use of these reflectors are subject to the IEEE 802.11™ WG Policies and Procedures. Note in particular the policy on confidentiality notices, which is repeated at the bottom of this page.

This form offers the choice of adding or removing some or all of the task group and standing committee reflectors. As a paricipant you should subscribe and should remain subscribed to the working group reflector. Don't unsubscribe to the working group reflector unless you do not intend to continue your participation.

Once you are a list subscriber, you can update your subscriptions using this form or, alternatively, you can create a password on the list server here and manage subscriptions yourself.

Non-member access

IEEE 802.11 provides a public reflector, to which all messages on its working group reflector are copied so that members of the public can observe the work of the 802.11 working group. You can join or leave the public reflector here. Anybody may join this list. Subscribers to this list are provided with read-only access (i.e., they cannot post to the list).

There is also a web-based interface through which the public can monitor email traffic on all the reflectors at the following locations:

- 802.11 working group (main reflector)
- Architecture (ARC) SC
- Chair's Advisory Committee (CAC)
- Editors
- TGbi (Enhanced Privacy Protection)
- TGbn (Ultra High Reliability)
- TGbp (Ambient Power)
- TGbq (Integrated mmWave)
- TGbr (Enhanced Light Communications)
- TGbt (Post-Quantum Cryptography)
- Maintenance

Appendix CB

Following the main reflector backwards in time brought me to the date of the email announcement that D1.0 was ready for letter ballot (https://ieee802.org/11/email/stds-802-11/index269.html):

Email Archive

Date Index (Page 269 of 366)

Thread Index
First Page Prev Page Next Page Last Page

- [STDS-802-11] Nov 2016 WG and TGax meeting minutes
  - *From*: Al Petrick
  - Date: Sun, 4 Dec 2016 05:19:52 -0500 (EST)
- [STDS-802-11] Fwd: Re: 802W-0117-January 2017 Interim Session-Room Reservation and Registration Reminder
  - *From*: Adrian Stephens
  - Date: Sat, 3 Dec 2016 06:52:21 -0500 (EST)
- Re: [STDS-802-11] Updated "interpretation of special measures" document
  - *From*: Adrian Stephens
  - Date: Fri, 2 Dec 2016 15:49:31 -0500 (EST)
- Re: [STDS-802-11] IEEE 802.11 Mandatory Technical Letter Ballot 225 for P802.11ax Draft 1.0 Starts Today
  - *From*: Sigurd Schelstraete
  - Date: Fri, 2 Dec 2016 14:15:14 -0500 (EST)
- Re: [STDS-802-11] IEEE 802.11 Mandatory Technical Letter Ballot 225 for P802.11ax Draft 1.0 Starts Today
  - *From*: gsmith
  - Date: Fri, 2 Dec 2016 12:45:29 -0500 (EST)
- Re: [STDS-802-11] IEEE 802.11 Mandatory Technical Letter Ballot 225 for P802.11ax Draft 1.0 Starts Today
  - *From*: Jon Rosdahl
  - Date: Fri, 2 Dec 2016 12:06:58 -0500 (EST)
- Re: [STDS-802-11] IEEE 802.11 Mandatory Technical Letter Ballot 225 for P802.11ax Draft 1.0 Starts Today
  - *From*: Mark Hamilton
  - Date: Fri, 2 Dec 2016 11:58:21 -0500 (EST)
- Re: [STDS-802-11] IEEE 802.11 Mandatory Technical Letter Ballot 225 for P802.11ax Draft 1.0 Starts Today
  - *From*: Jon Rosdahl
  - Date: Fri, 2 Dec 2016 11:19:05 -0500 (EST)
- Re: [STDS-802-11] IEEE 802.11 Mandatory Technical Letter Ballot 225 for P802.11ax Draft 1.0 Starts Today
  - *From*: gsmith
  - Date: Fri, 2 Dec 2016 11:14:56 -0500 (EST)
- Re: [STDS-802-11] IEEE 802.11 Mandatory Technical Letter Ballot 225 for P802.11ax Draft 1.0 Starts Today
  - *From*: Sigurd Schelstraete
  - Date: Thu, 1 Dec 2016 17:10:59 -0500 (EST)
- Re: [STDS-802-11] IEEE 802.11 Mandatory Technical Letter Ballot 225 for P802.11ax Draft 1.0 Starts Today
  - *From*: Adrian Stephens
  - Date: Thu, 1 Dec 2016 14:20:02 -0500 (EST)
- [STDS-802-11] IEEE 802.11 Mandatory Technical Letter Ballot 225 for P802.11ax Draft 1.0 Starts Today
  - *From*: Adrian Stephens
  - Date: Thu, 1 Dec 2016 14:17:23 -0500 (EST)

Appendix CC (annotated)

Selecting the highlighted link opens the December 1, 2016 email shown above.

20. Because any Active 802.11 participant was able to join the listserv and the reflector, any Active 802.11 participant, including an Aspirant who only attended one session, would have been notified of the release of D1.0. The 802.11 WG also provided a public reflector for non-members by which any member of the public could observe the work of the 802.11 WG. *See* Appendix CB. Likewise, because any Active 802.11 participant was provided credentials to access the private area after the session in which they become an active 802.11 participant, all Active 802.11 participants, including Aspirants who only attended one session,

would have had access to the draft as of the date of its announcement on the email reflector and listserv (Dec. 1, 2016).

C. IEEE 802.11 Plenary Session – November 7-14, 2016

21. A plenary session was held in San Antonio, Texas from November 7-14, 2016. During this meeting, it was decided that a draft D1.0 was to be prepared and a 30-day working group letter ballot was to be initiated, as shown in the IEEE 802.11 November 2016 Session Closing Report:

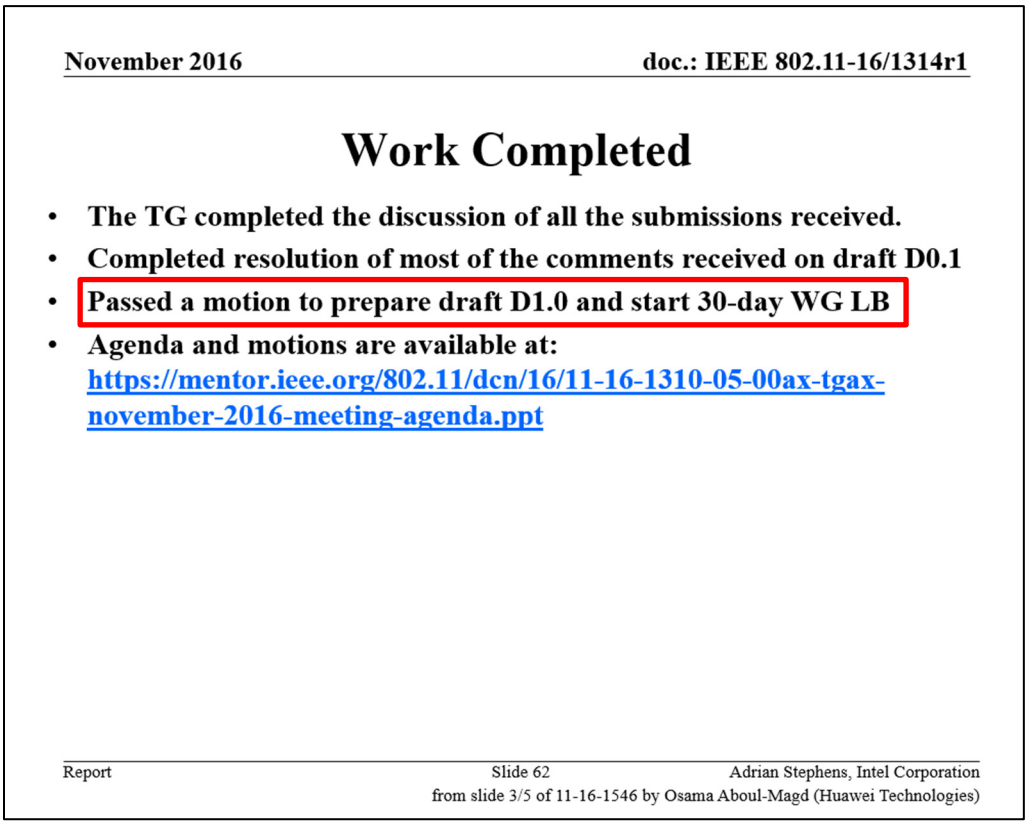

November 2016 doc.: IEEE 802.11-16/1314r1

Work Completed

- **The TG completed the discussion of all the submissions received.**
- **Completed resolution of most of the comments received on draft D0.1**
- **Passed a motion to prepare draft D1.0 and start 30-day WG LB**
- **Agenda and motions are available at: https://mentor.ieee.org/802.11/dcn/16/11-16-1310-05-00ax-tgax-november-2016-meeting-agenda.ppt**

Report Slide 62 Adrian Stephens, Intel Corporation
from slide 3/5 of 11-16-1546 by Osama Aboul-Magd (Huawei Technologies)

802.11 November 2016 WG Closing Report at slide 62 (annotated)

The IEEE 802.11 November 2016 Session Closing Report is available online at https://mentor.ieee.org/802.11/dcn/16/11-16-1314-00-0000-november-2016-wg-

closing-report.pptx.

22. The Meeting Minutes confirm that the TGax editor was instructed to prepare the P802.11ax Draft D1.0 and the 30 day WG Technical Letter Ballot was approved:

> 36.4. **TGax Letter Ballot** (slide #13)
> 36.4.1.1. → **Instruct the TGax editor to prepare P802.11ax Draft D1.0 and**
> 36.4.1.2. → **Approve a 30 day Working Group Technical Letter Ballot asking the question "Should TGax Draft 1.0 be forwarded to Sponsor Ballot?"**
> 36.4.1.3. → [TGax vote: Moved: Robert Stacey, 2nd: Vinko Erceg, Result: 89-0-6]
> 36.4.2. Moved: Osama Aboul Magd on behalf of TGax
> 36.4.3. For: 45, Against: 2, Abstain: 3 (Motion passes)

Minutes of the IEEE P802.11 Full Working Group at 16

The IEEE 802.11 November 2016 Session Meeting Minutes are available at https://mentor.ieee.org/802.11/dcn/16/11-16-1386-01-0000-minutes-working-group-november-2016.doc.

23. Thus, attendees of the November 7-14 Plenary Session were made aware of the imminent release of D1.0, which occurred on December 1, 2016.

D. RFC 7241: The IEEE 802/IETF Relationship

24. RFC 7241 (Appendix CG) is a publication of the Internet Engineering Task Force ("IETF") that "describes the standardization cooperation between [IEEE] Project 802 [and] the Internet Engineering Task Force (IETF)." IETF at 1. RFC 7241 is available at https://datatracker.ietf.org/doc/html/rfc7241. RFC 7241 describes different paths by which interested individuals could obtain access to

IEEE 802 Working Group drafts. *Id*. at 12. As stated in RFC 7241, "The IEEE-SA grants permission for an IEEE 802 draft to be distributed without charge to the participants for that IEEE 802 standards development project." *Id*.; *see also* Ex. 1015 ¶ 65. RFC 7241 explains that IEEE policy allows individuals to freely make "[r]equests to the relevant WG Chair for access to a draft," and emphasizes that such requests "for purposes of participation in the project are typically granted." IETF at 12.

25. RFC 7241 also describes an alternative path to obtaining IEEE WG drafts that does not require an individual to be an IEEE member, nor even to request access to a draft from an IEEE member. Instead, under the agreement between IEEE and IETF, an IETF WG chair is "provided access to the username/password for the IEEE 802 WG archives and is permitted to share that information with participants in the IETF WG." IETF at 13. RFC 7241 explains that any burden to obtaining an IEEE WG draft such as D1.0 through IETF is minimal: "Since it is possible to participate in IETF without attending meetings, or even joining a mailing list, IETF WG chairs will provide the information to <u>anyone who requests it</u>." *Id*. (emphasis added). RFC 7241 explains that "Participation in the IETF is <u>open to anyone</u> (technically, anyone with access to email sufficient to allow subscription to one or more IETF mailing lists). All IETF participants act as individuals. There is no concept of 'IETF membership'." IETF at 8 (emphasis

added). Thus, IETF participants could obtain IEEE 802 WG drafts from the IETF WG chair upon request—even without having ever attended an IETF or IEEE meeting, joining a mailing list, or the like.

26. The cooperation between IEEE and IETF further exemplifies how there was no expectation of confidentiality with respect to IEEE 802.11 WG drafts, and any restrictions on distribution of 802.11 WG drafts was minimal. IEEE policy was instead designed to permit broad access to drafts by allowing any individual interested in the subject matter to contribute to the standard and obtain access to drafts in furtherance of that goal.

27. RFC 7241 also discusses how non-voters could provide ballot comments on IEEE 802 drafts. IETF at 20. Specifically, IETF states, "Any ballot comments received from non-voters before the close of the ballot are required to be considered in the comment resolution process." *Id*. This statement demonstrates that even non-voting participants were able to review 802.11 WG drafts (such as D1.0). This is consistent with the affirmative statement on D1.0 that granted permission to reproduce the document. Ex. 1015 ¶ 65.

E. First-Hand Experience

28. I have first-hand experience working with 802.11 WG drafts, and I would share drafts with interested parties. While not specific to D1.0, below is a screenshot of an email I sent to my students at UCLA that included drafts of the

802.11 standard from 2020.

From: **Christopher Hansen** <chris@covariantcorp.com>
Date: Thu, Jun 18, 2020 at 12:58 PM
Subject: [WiFi/802.11Course] Zoom Info and Student Packet for June 20 Course

[redacted]

Hi Everyone,

Below is the Zoom link and the link for the zipped student package, including PDFs of the slide deck, PDFs for the 802.11 standards documents, and several Matlab LiveScripts that we will use for examples and exercises.

See you online this Saturday.

Chris

The Zoom info is:

Christopher Hansen is inviting you to a scheduled Zoom meeting.

Topic: WiFi/802.11 One Day Course
Time: Jun 20, 2020 09:30 AM Pacific Time (US and Canada)

Join Zoom Meeting
https://us02web.zoom.us/j/76202076258?pwd=NW9wOXZTdUhaeGk2bTRZMWtJVmpGZz09

Meeting ID: 762 0207 6258
Password: 80211
One tap mobile
+14086380968,,76202076258#,,,,0#,,80211# US (San Jose)
+16699006833,,76202076258#,,,,0#,,80211# US (San Jose)

Appendix CH (redacted)

The set of documents I sent to my students at UCLA included IEEE 802.11ax D6.0, which was a revision of earlier drafts, D1.0 through D5.0. I downloaded it from the IEEE 802.11 password protected server. This email is representative of my personal experience as an IEEE voting member sharing 802.11 drafts with interested individuals outside of IEEE for academic purposes or otherwise to promote the development of the standard. Further, based on my years of experience as an IEEE member and participant in many IEEE sessions, I have personal knowledge that it was common practice for voting members and other active participants (*e.g.*, aspirants) to share WG drafts for similar reasons as of the Critical Date of the ’262 Patent (April 14, 2017) and before.

III. CONCLUSION

29. Based on the forgoing, it is my opinion that 802.11ax/D1.0, otherwise

known as D1.0, was publicly accessibly to members of the interested public as of December 1, 2016.

30. I currently hold the opinions expressed in this declaration. But my analysis may continue, and I may acquire additional information and/or attain supplemental insights that may result in added observations.

APPENDIX CA

IEEE 802.11™
Wireless Local Area Networks (WLANs)

Operations Manual

www.ieee802.org/11

Date:

2016-07-30

Author:

Adrian Stephens
Chair, IEEE 802.11 WLANs WG
Intel Corporation
Email: adrian.p.stephens@ieee.org

Jon Rosdahl,
Vice Chair, IEEE 802.11 WLANs WG
Qualcomm Incorporated
Email: jrosdahl@ieee.org

Dorothy Stanley
Vice Chair, IEEE 802.11 WLANs WG
Hewlett Packard Enterprise
Email: dorothy.stanley@hpe.com

IEEE Project 802 Wireless LAN Working Group 802.11
Copyright (c) 2000-2016 by the Institute of Electrical and Electronic Engineers, Inc.
345 East 47th Street
New York, NY 10017, USA
All rights reserved.

Revision History:

Item	Document	Revision Date	Notes
1	11-09/0002r0	17 January 2010	Opman created from removing redundant info from the old P&P that is now covered in the New 802 WG P&P based on AudCom Baseline requirements 2009.
2	11-09/0002r1	15 March 2010	Suggested Edits from Jan-Mar
3	11-09/0002r2	21 May 2010	Final version adopted. All changes accepted clean copy.
4	11-0/0002r3	11 July 2010	Updates for Proposed change to support improved WG LB process near end of the ballot
5	11-09/0002r4	14 July 2010	Modified 3.8 so that notification period under CRC Accelerated Process rules is 72 Hours (from 24 hours) as per motion in WG mid-session plenary. Accepted changes.
6	11-09/0002r5	14 October 2010	Modified rules in 8.4 for access to private area (see 11-10/1088r2)
7	11-09/0002r6	Sept 2011	Added section on MDR (Mandatory Draft Review) and types of vote/ballot per group
8	11-09/0002r7	Sept 2011	Redlined Update after CAC review
9	11-09/0002r8	Sept 2011	Accepted changes for adoption motion Sept 23
10	11-09/0002r9	March 2012	Updated link to SASB P&P – Added Clause 12
11	11-09/0002r10	March 2012	Clean Version for Approval March 2012
12	11-09/0002r11	July 2012	New section 9.1.6 to support requests from the regulatory SC to the ANA
13	11-09/0002r12	July 20, 2012	Clean Version for Approval July 2012
14	11-13/0001r0	January 2013	Change to new document number doc 11-13/0001 Clarification of Qualifying Interims correct/update some broken links Redline version for discussion.
15	11-13-0001r1	18 January 2013	The proposed Clause 7.5 Qualifying Interims was removed for further discussion Clean Version for Approval January 2013
16	11-13-0001r2	18 March 2013	Added section on Agendas Added section on Topic Interest Groups
17	11-13-0001r3	16 March 2014	Added “Former-Voter” categorization and allowed to join reflectors and upload documents. Modified membership rules so that previous attendances contribute towards regaining Voter status after loss of Voter status due to non-attendance.
18	11-13-0001r4		Clean version Approved March 2014
19	11-14-0629r0	16 May 2014	Review comments
20	11-14-0629r1	12 July 2014	Edits to 3.7.1(document types), reference updates, liaison responsibility updates, letter ballot response rate aligned with 802 WG P&P, external ANA request brought to WG for confirmation
21	11-14-629r2	18 July 2014	Clean WG approved copy (r1 with changes accepted)
22	11-14-629r3	25 September 2014	Corrected Adrian’s email, deleted IEEE standards companion reference and changed section 7.1.5 email list reference to refer to WG rather than TG email lists
23	11-14-629r4	01 November 2014	Addition to 7.1.5 for mentor document posting, to be consistent with 8.3 text
24	11-14-629r5	06 November 2014	Renamed [other1] reference link
25	11-14-629r6	07 November 2014	Clean WG approved copy (r5 with changes accepted)
26	11-14-629r7	08 November 2014	Added ANA element ID allocation (section 9)
27	11-14-629r8	08 January 2015	Removed requirement for LOCAL server draft access

28	11-14-629r9	08 March 2015	Change Regulatory SC teleconference notice from 10 to 5 days, section 4.6.3
29	11-14-629r10	13 March 2015	Clean WG approved copy (r9 with changes accepted)
30	11-14-629r11	11 July 2015	Figure D.1 updated; Aspirant has member area access; addition of former voter
31	11-14-629r12	17 July 2015	Clean WG approved copy (r11 with changes accepted)
32	11-14-0629r13	13 Sept 2015	Consolidate and update secretary guidelines; attendance for subgroup meetings within WG session not required
33	11-14-0629r14	11 Jan 2016	Clean WG approved (13 Nov 2015) copy (r13 with changes accepted)
34	11-14-0629r15	29 Jul 2016	Changes to 7.1.4 ballot return rules as approved, 2016-07-29; updated references and grammatical edits
35	11-14-0629r16	29 Jul 2016	Clean WG approved (29 July 2016) copy (r15 with changes accepted)

Contents

Contents **3**
Table of Figures **5**
References **6**
Acronyms **7**
Definitions **8**
1 Hierarchy **9**
2 Maintenance of Operations Manual **9**
3 802.11 Working Group **9**
3.1 Overview 9
3.2 Function 10
3.3 Working Group Officers' Responsibilities 11
3.3.1 Working Group Chair 11
3.3.2 Working Group Vice-Chair(s) 12
3.3.3 Working Group Secretary 12
3.3.4 Working Group Technical Editor 12
3.3.5 Working Group Treasurer 13
3.3.6 WG Publicity Chair 13
3.3.7 Liaison Officials 13
3.4 Working Group Officer Election Process 13
3.5 Working Group Chair Advisory Committee 14
3.5.1 CAC Function 14
3.5.2 CAC Membership 14
3.6 Working Group Sessions 15
3.6.1 Plenary Sessions 15
3.6.2 Interim Sessions 15
3.6.3 Session Meeting Schedule 16
3.6.4 Session Attendance 16
3.6.5 Session Meeting Etiquette 16
3.7 Documentation 17
3.7.1 Format 17
3.7.2 Layout 17
3.7.3 Submissions 18
3.7.4 File naming conventions 18
3.7.5 Agendas 18
3.8 Motions Modifying Drafts 19

3.9 Draft WG Balloting ... 19
3.9.1 Draft Standard Balloting Group ... 19
3.9.2 Draft Standard Balloting Requirements ... 19
3.9.3 Formatting Requirements for Draft Standard and Amendments ... 20
3.9.4 Accelerated process for completion of WG Letter Ballot ... 20
3.10 Mandatory Draft Review (MDR) ... 21
3.11 Summary of Types of Balloting / Voting used in 802.11 ... 21
4 Task Groups ... 22
4.1 Function ... 22
4.2 Task Group Chair ... 23
4.3 Task Group Vice-Chair ... 23
4.4 Task Group Secretary ... 23
4.5 Task Group Technical Editor ... 23
4.6 Task Group Membership ... 23
4.6.1 Rights ... 23
4.6.2 Meetings and Participation ... 24
4.6.3 Teleconferences ... 24
4.7 Operation of the Task Group ... 24
4.7.1 Task Group Chair Functions ... 24
4.7.2 Task Group Vice-Chair Functions ... 25
4.7.3 Voting ... 25
4.7.4 Task Group Chair's Responsibilities ... 25
4.7.5 Task Group Chair's Authority ... 26
4.8 Deactivation of a Task Group ... 26
5 Study Groups ... 26
5.1 Function ... 26
5.2 Formation ... 26
5.3 Continuation ... 26
5.4 Study Group Operation ... 26
5.4.1 Study Group Meetings ... 26
5.4.2 Voting at Study Group Meetings ... 27
5.4.3 Reporting Study Group Status ... 27
6 802.11 Standing Committee(s) ... 27
6.1 Function ... 27
6.2 Membership ... 27
6.3 Formation ... 27
6.4 Continuation ... 27
6.5 Standing Committee Operation ... 27
6.5.1 Standing Committee Meetings ... 27
6.5.2 Voting at Standing Committee Meetings ... 27
6.6 Standing Committee Chair ... 27
6.7 Topic Interest Groups ... 28
6.8 Ad-hoc Group(s) ... 28
7 Voting Rights ... 28
7.1 Earning and Losing Voting Rights ... 28
7.1.1 Non-Voter ... 29
7.1.2 Aspirant ... 29
7.1.3 Potential Voter ... 29
7.1.4 Voter ... 29
7.1.5 Former-Voter ... 30
7.2 Voting Tokens ... 30
8 Access to: Email lists, Teleconferences, Document server and the 802.11Drafts ... 30
8.1 Email lists ... 30
8.2 Teleconferences ... 30
8.3 Public Document Server ... 31
8.4 Private Members-only Document Server ... 31

8.5 Responsibilities of an 802.11 Sponsor Ballot CRC ... 31
9 IEEE 802.11 WG Assigned Numbers Authority ... 32
9.1.1 WG ANA Lead ... 32
9.1.2 ANA Document ... 32
9.1.3 ANA Request Procedure ... 32
9.1.4 ANA Revocation Procedure ... 32
9.1.5 ANA Appeals Procedure ... 33
9.1.6 ANA requests from the Regulatory SC ... 33
10 Requirements and Guidelines for 802.11 Secretaries ... 33
11 Guidelines for IEEE 802.11 WG and Task Group technical editors ... 34
12 Guidelines for comment resolution ... 34
13 Appendix A: MDR Process Summary ... 34
14 Appendix B: Number of Sessions required to become a Voter ... 35
15 Appendix C: Membership Flow-Diagram ... 36

Table of Figures

Figure 3.1 – Project 802 Organizational Structure ... 10
Figure 3.2.1 – 802.11 WG Organizational Structure ... 11
Figure 3.6.1.1 – Typical 802.11 WG meetings during 802 Plenary Session ... 15
Figure 3.6.2.1 – Typical 802.11 WG Meetings during Interim session ... 16
Table 3.7.5 – File Naming Convention ... 18
Figure C.1 - New participant starting at a plenary session, attending plenary sessions ... 35
Figure C.2 - New participant starting at an interim session ... 35
Figure D.1 – Membership Flow Diagram ... 36

References

Policies and Procedures

[rules1] IEEE Standards Board Bylaws
http://standards.ieee.org/guides/bylaws/

[rules2] IEEE-SA® Standards Board Operations Manual
http://standards.ieee.org/guides/opman/

[rules3] LAN/MAN Standards Committee Policies and Prodedures
IEEE 802 LAN/MAN Standards Committee (LMSC) Sponsor Policies and Procedures

[rules4] LAN/MAN Standards Committee Operations Manual
IEEE 802 LAN/MAN Standards Committee (LMSC) Operations Manual

[rules5] LAN/MAN Standards Committee Working Group Policies and Procedures
IEEE 802 LAN/MAN Standards Committee (LMSC) Working Group Policies and Procedures (WG P&P)Robert's Rules of Order Newly Revised (Latest Published Edition), by Henry M. Robert III (Editor), Sarah Corbin Robert, and William J. Evans (Editor), Perseus Publishing

Other References

[other1] IEEE Standards Development Lifecycle
http://standards.ieee.org/develop/

[other2] Overview & guide to IEEE 802 LMSC
http://grouper.ieee.org/groups/802/802 overview.pdf

[other3] Adobe Acrobat Reader for viewing PDF files
http://www.adobe.com/support/downloads/main.html

[other4] ISO/IEC JTC1: International Standards Organization / International Engineering Consortium Joint Technical Committee 1
http://www.jtc1.org

[other5] IEEE Standards Style Manual
http://standards.ieee.org/guides/style/

Acronyms

802 EC	802 LMSC executive committee
802 LMSC	Project 802, LAN/MAN standards committee
ANA	Assigned Numbers Authority
CAC	chair advisory committee
IEC	International Engineering Consortium
IEEE	Institute of Electrical and Electronics Engineers
IEEE-SA	IEEE Standards Association
IPR	intellectual property rights
ISO	International Standards Organization
LAN	local area network
PAR	project authorization request
PDF	portable document format (Adobe Acrobat file format)
SC	standing committee
SG	study group
TAG	technical advisory group
WG	working group
WLAN	wireless local area network

Definitions

802.11 plenary meeting: one of three 2-hour meeting slots during which the 802.11 WG meets together as a whole.

802.11 session: the meetings as described in the 802.11 agenda for a particular event, usually running from Sunday to Friday of a week.

Active 802.11 participant: a participant with status Aspirant, Potential-Voter, Voter or a Former-Voter who is a member of an active 802.11 WG balloting pool.

Former-Voter: a member who was a Voter at any time in the past and has since lost voting rights and become a Non-Voter. NOTE – a Former-Voter may still be a voter in a ballot pool for Working Group Letter Ballot (see section 3.9.1 of this document).

1 Hierarchy

The following documents take precedence over the procedures described in this document in the following order (highest precedence shown first, in case of revisions, the latest approved revision applies):

New York State Not-for-Profit Corporation Law
IEEE Certificate of Incorporation
IEEE Constitution
IEEE Bylaws
IEEE Policies
IEEE Board of Directors Resolutions
IEEE Standards Association Operations Manual
IEEE-SA Board of Governors Resolutions
IEEE-SA Standards Board Bylaws
IEEE-SA Standards Board Operations Manual
IEEE-SA Standards Board Resolutions
IEEE Computer Society (CS) Constitution and Bylaws
IEEE CS Policies and Procedures, section 10
IEEE CS Board of Governors Resolutions
IEEE CS Standards Activities Board Policies and Procedures (SAB P&P)
IEEE Project 802 LAN/MAN Standards Committee (LMSC) Sponsor Policies and Procedures (LMSC P&P)
IEEE Project 802 LAN/MAN Standards Committee (LMSC) Operations Manual (LMSC OM)
IEEE Project 802 LAN/MAN Standards Committee (LMSC) Working Group (WG) Policies and Procedures (WG P&P)

Robert's Rules of Order Newly Revised (latest edition) is the recommended guide on questions of parliamentary procedure not addressed in these procedures.

IEEE 802 Procedural documents are all posted here: http://www.ieee802.org/devdocs.shtml.

2 Maintenance of Operations Manual

The Operations Manual is adopted as stated in section 9.3 of the 802 WG P&P ([rules5]). It is maintained as directed by the WG Chair.

3 802.11 Working Group

3.1 Overview

The 802.11™ Working Group (WG) is responsible for developing Wireless Local Area Network (WLAN) standards under the authority of the IEEE® Project 802 LAN/MAN Standards Committee (802 LMSC). The 802.11 WG is one of several WGs that comprise the Project 802 LAN/MAN Standards Committee.

The 802 LMSC is directed by the 802 Executive Committee (802 EC). The 802 EC is the sponsor for both sponsor ballot groups and standards development groups. The 802 LMSC includes WGs, Technical Advisory Groups (TAGs) and Executive Committee Study Groups (ESG) to standardize technologies applicable to local and metropolitan area networks as shown in Figure 3.1.

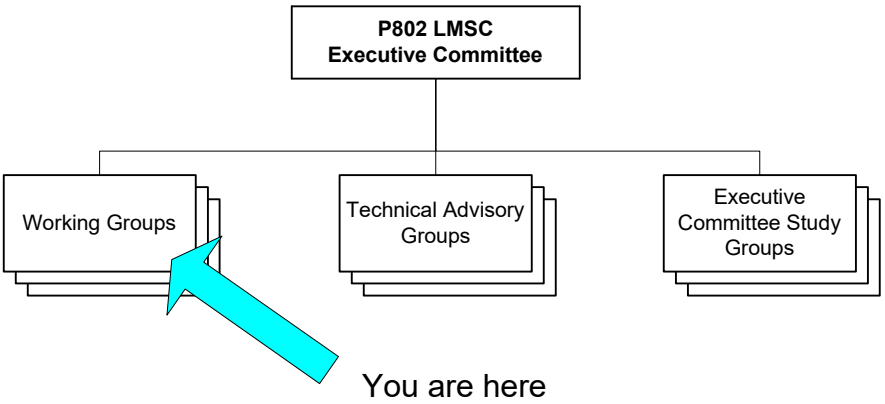

Figure 3.1 – Project 802 Organizational Structure

References [other1] and [other2] contain background information on the IEEE standards development process and an introduction to the 802 LMSC.

3.2 Function

The 802.11 WG charter is to develop Physical layer and MAC layer specifications for wireless Local Area Networks (LANs) carried out under Project Authorization Requests (PAR) approved by the IEEE Standards Board and assigned to the 802.11 WG. Since the scope of standards work which comprises 802.11 WG activity is widely dispersed in time, technology and structure, individual standards activities within 802.11 WG are, at the discretion of the 802.11 WG, carried out by Task Groups (TGs) operating under, and reporting to the 802.11 WG.

The 802.11 WG is chartered to:

- Maintain and revise the 802.11 standard, amendments and recommended practices.
- Develop new standards in a reasonable time frame within the scope of the 802 LMSC.
- Forward these standards to International Standards Organization / International Engineering Consortium (ISO/IEC) JTC1 [other4].
- Maintain liaisons with other groups within 802 LMSC, and other relevant standards setting bodies and radio spectrum regulatory bodies.

802.11 WG activities are administered by the WG Chair who is assisted in this task by members of the WG Chair Advisory Committee (CAC; see section 3.5 of this document).

The organizational structure of 802.11 WG is illustrated in Figure 3.2.1.

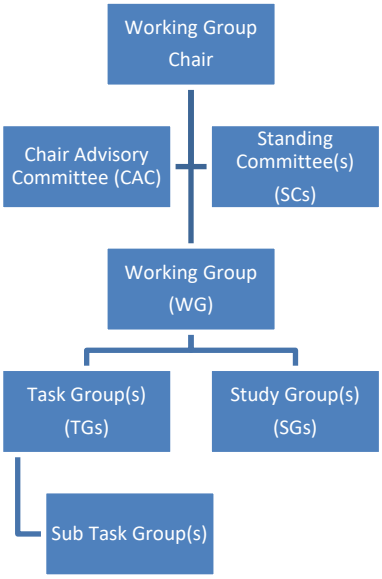

Figure 3.2.1 – 802.11 WG Organizational Structure

3.3 Working Group Officers' Responsibilities

3.3.1 Working Group Chair

As stated in the 802 WG Policies and Procedures [rules5], the Chair of the WG is responsible for presiding over WG Plenary sessions.

Responsibilities of the chair include:

Before session tasks:

- Submit agenda items for the opening Executive Committee meeting (a week before the meeting).
- Attend the opening Executive Committee meeting.
- Report the status of the WG to the plenary 802 meeting.

During session tasks:

- Conduct full WG meetings.
- Keep Executive Committee members informed as early as possible about 802.11 matters requiring approval at the closing 802 EC meeting.
- Attend the closing 802 EC meeting; representing and leading 802.11 items of business.
- Maintain a roll call voters list.

After session tasks:

- Prepare a WG status report to the 802 EC Recording Secretary within one week after the conclusion of the closing 802 EC meeting. This status report shall include a description of the progress made during the week, as well as plans for further work and future meetings.
- Maintain an accurate 802.11 member list and post that list on the 802.11 website.
- Prepare the agenda and venue for the next meeting; publish the agenda and meeting venue information on web site, and email notice of same to the 802.11 WG Email list.
- Manage the preparation of the meeting place as well as the venue for the next interim meeting.
- Prepare sponsor ballot documentation on the IEEE-SA website (the "MyBallot" system), interface with IEEE-SA staff as necessary to conduct ballots, prepare and publish

consolidated results. Ensure the sponsor ballot documentation is accurate, complete and self-explanatory.
- Work with IEEE staff to publish 802.11 Drafts, as directed by the WG.
- Respond to inquiries regarding the 802.11 WG.
- Work with TG Chairs to prepare meeting agendas and room requirements for next session(s).

3.3.2 Working Group Vice-Chair(s)

Responsibilities of the Vice-Chair(s) are assigned by the Chair and may include the following.

Before session tasks, including but not limited to, preparation of:
- Voters list.
- Updated Electronic Records of participant status as required by the meeting planner and the IEEE-SA systems according the required schedule.
- Populate the Electronic Attendance system with plan of meetings.
  - Update any changes during the session.
  - Arbitrate any attendee record discrepancies.
- PAR reviews.

During session tasks, including but not limited to:
- Be prepared to take over the duties of the Chair in the event of temporary or permanent absence.
- Be prepared to assume or assign secretary duties when required.
- Between meetings, be prepared to respond to inquiries regarding the WG and keep the Chair informed.
- Oversee the document process.
- Attend to any business that might otherwise prevent the Chair from orderly conduct of the meetings, such as attending to emergency messages, and inquiries from the meeting planner or hotel staff.
- Assist the Chair in obtaining accurate and fair vote counts.
- Assist the Chair during IEEE 802 Executive Committee meetings held on initial and final days.

After session tasks, but not limited to:
- Assist chair to update participant status based on attendance, and inform participants of any change in status and ensure that a list of Active and Former-Voter participants is posted on the 802.11 website.
- Prepare WG ballot documentation on the 802.11 website, interface with IEEE-SA staff as necessary to conduct ballots, collect ballot return forms, and prepare consolidated ballot results.
- Update web site: meeting arrangements, ballot status.
- Update 802.11 Draft documents on the 802.11 members-only website.
- Update 802.11 email list servers.

3.3.3 Working Group Secretary

See section 10 of this document, Guidelines for 802.11 Secretaries for details on content and form of minutes.

3.3.4 Working Group Technical Editor

The WG Technical Editor is responsible for:

- Organizing and conducting regular Editor meetings.

- Oversee the Draft publication process:
  - Coordinate between the IEEE-SA publication editor and TG Technical Editor.
  - Proof read and coordinate document changes edited by IEEE staff.
  - Advise WG Chair when a Standards Board Approved draft is ready for publication.

3.3.5 Working Group Treasurer

The WG Treasurer is responsible for the financial operations of the WG and the WG treasury. Specific responsibilities are listed in section 14 of the 802 WG P&P ([rules5]).

3.3.6 WG Publicity Chair

The Chair may appoint a WG Publicity Chair to assist with public relations and marketing communications.

3.3.7 Liaison Officials

Liaison relationships are established with other groups within 802 LMSC, other relevant standards setting bodies, industry promotional bodies, Special Interest Groups (SIGs), and radio spectrum regulatory bodies (liaison groups). Liaison relationships can be established via liaison statements, officials or facilitators see http://ieee-sa.centraldesktop.com/802liaisondb/&num_165948=0.

Liaison officials shall be recommended by the WG Chair and confirmed by the vote of the WG. Liaison officials shall be reconfirmed each year at the July 802.11 plenary session. Liaison officials will seek to be granted voting rights in their respective liaison groups.

Liaison Official Roles and Responsibilities are listed below:

- Liaison officials are responsible for providing updates and status reports to the WG at plenary and interim sessions. If a liaison official does not provide this in two consecutive sessions, then the WG Chair may withdraw the liaison responsibility from the concerned individual. The WG Chair recommends a replacement as necessary.
- Liaison officials cannot pass on responsibilities, nor have other individuals represent their post without having WG or WG Chair approval.
- A liaison official shall be an 802.11 Voter. Liaison officials are given 802.11 WG attendance credit for attending liaison group meetings that are concurrent with 802.11 WG sessions. NOTE – a liaison official shall be an 802.11 voter in order to be appointed as a liaison official, and a liaison official ceases to be a liaison official if the person loses 802.11 voting rights.
- Liaison officials shall be empowered to report status of the WG developments to their respective liaison groups, and shall report back to the WG the status of the liaison group at interim and plenary sessions.

3.4 Working Group Officer Election Process

The election of the IEEE 802.11 WG Officers (Chair and Vice-Chairs) is held in March of each even-numbered year. The nominations for the election shall be made at the WG Opening Plenary meeting. The WG Chair shall designate one of the WG Vice-Chairs as an Acting Chair Pro Tem if the WG Chair is running for re-election. If not running for re-election, the WG Chair shall conduct the election process. This election process shall be used for each WG officer election.

1. The Acting Chair shall open the floor for nominations.
2. The Acting Chair shall close nominations after the nominations have been made.
3. Each candidate shall be given a short time (nominally, 5-10 minutes) for an introductory statement of acceptance that should nominally contain the candidate's:
   a. Summary of qualifications
   b. Commitment to participate and accept duties and responsibilities
   c. Vision for the WG.

4. The floor shall be opened for discussion (nominally for five-ten minutes total).
   a. The Acting Chair should limit the duration of comments and promote open participation, both pros and cons. If only one candidate is nominated, the Acting Chair may choose to sharply limit the debate.
5. The discussion shall be repeated, with the WG Chair leading the process for the nomination(s) of the WG Vice-Chair(s).
6. At the Mid-Plenary meeting, the WG Officers shall conduct the election, count the votes, and notify the WG of the results.
   a. Voting tokens shall be used to cast valid votes during the session.
   b. In order to be elected, any candidate must receive a simple majority (over 50%) of the votes cast in the election for the respective position.
   c. Should no candidate receive a majority in the election, a runoff election shall be held. The process shall be similar to the initial election, except that:
      i. New nominations shall not be permitted.
      ii. In the runoff election, the nominated candidate having received the fewest votes in the previous election round shall not be an eligible candidate (in case a tie prevents this possibility, all the nominated candidates shall remain eligible).
   d. If the process is inconclusive, another runoff shall be held, as in the point above.

3.5 Working Group Chair Advisory Committee

The 802.11 WG Chair Advisory Committee (CAC) functions as the coordinating body supporting the WG Chair in formulations of WG policy and the performance of WG chair duties. The 802.11 CAC has no voting procedures, or policies. The intent is to have the 802.11 CAC operate in a consultative manner. The 802.11 CAC may meet during 802.11 interim and plenary sessions and by teleconference between sessions as determined by the WG Chair.

3.5.1 CAC Function

The function of the CAC is to assist the WG Chair in performing the following tasks:

- Provide procedural and, if necessary, technical guidance to WG, TGs, SGs and SCs as it relates to their charters.
- Oversee WG, TG, SG and SC operation to see that it is within the scope of 802.11 WG.
- Review TG draft standards proposed for submission to WG letter ballot and offer recommendations, if any, to the WG.
- Consider complaints of WG, TG, SG and SC members and their resolution at the Plenary, WG, TG, SG and SC meetings.
- Call meetings, including teleconferences, and issue meeting minutes.
- Prepare the WG agenda and materials for the WG plenary meetings.
- Determine room allocation requests to the meeting planners for the next session.
- Manage any other 802.11 WG logistics.

3.5.2 CAC Membership

The Membership of the CAC is appointed at the discretion of the WG Chair. Membership of the CAC is composed of the following 802.11 WG officers:

- WG Chair
- WG Vice-Chair(s)
- WG Secretary
- WG Technical Editor(s)
- WG Treasurer
- WG Publicity Chair
- WG ANA Lead
- TG Chairs and TG Vice-Chair(s)

- SG Chairs and SG Vice-Chair(s)
- SC Chairs and SC Vice-Chair(s)

The chair or chair's representative of each sub-group that is active at a session should be available at the CAC meetings during that session.

3.6 Working Group Sessions

3.6.1 Plenary Sessions

802.11 WG plenary sessions are conducted three times a year as part of the 802 LMSC plenary sessions (see [other2]). Typically the 802.11 WG Opening and Closing plenary meetings are held at each 802 LMSC plenary session (see Figure 3.6.1.1). Occasionally there are TG, SG, or SC meetings during the 802 EC meeting on Monday morning and/or the weekend preceding the plenary session. (NOTE – meetings held before the opening of 802 plenary meeting are treated as ad-hoc meetings.)

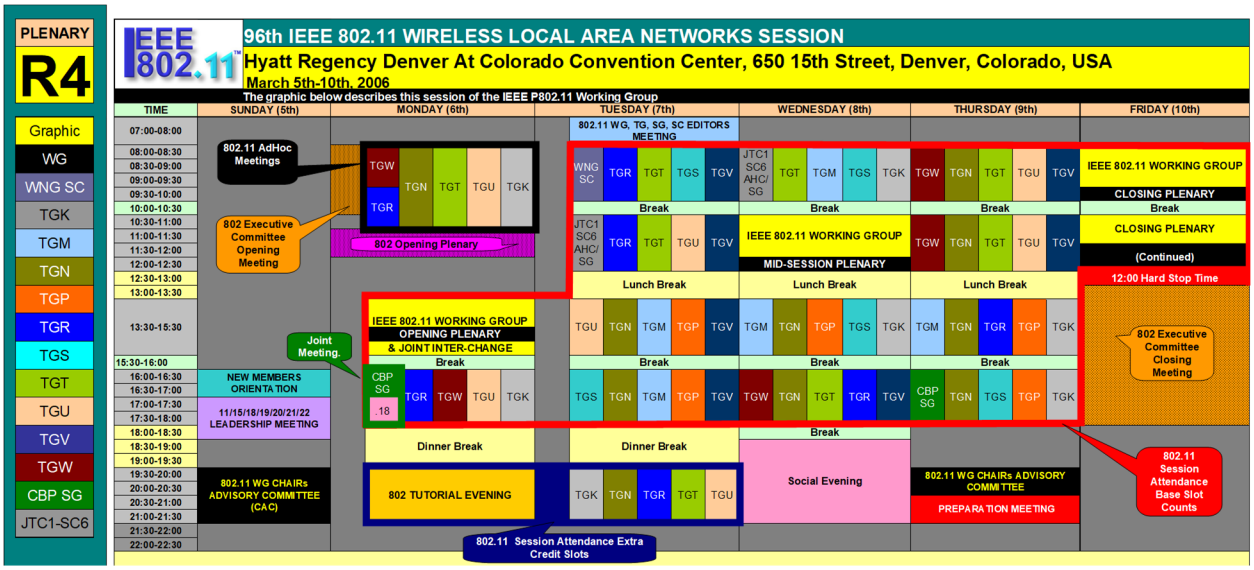

Figure 3.6.1.1 – Typical 802.11 WG meetings during 802 Plenary Session

3.6.2 Interim Sessions

Interim sessions of the WG, TGs, SGs and/or SCs are scheduled by the respective groups no later than the end of the prior plenary session. A WG interim session is held between 802 plenary sessions. Additional sessions may be scheduled as needed to conduct business of the WG, TGs, SGs and/or SCs. The date, time, and place of the session(s) must be approved by the WG and announced at the WG Closing Plenary meeting and entered in the minutes of the WG meeting.

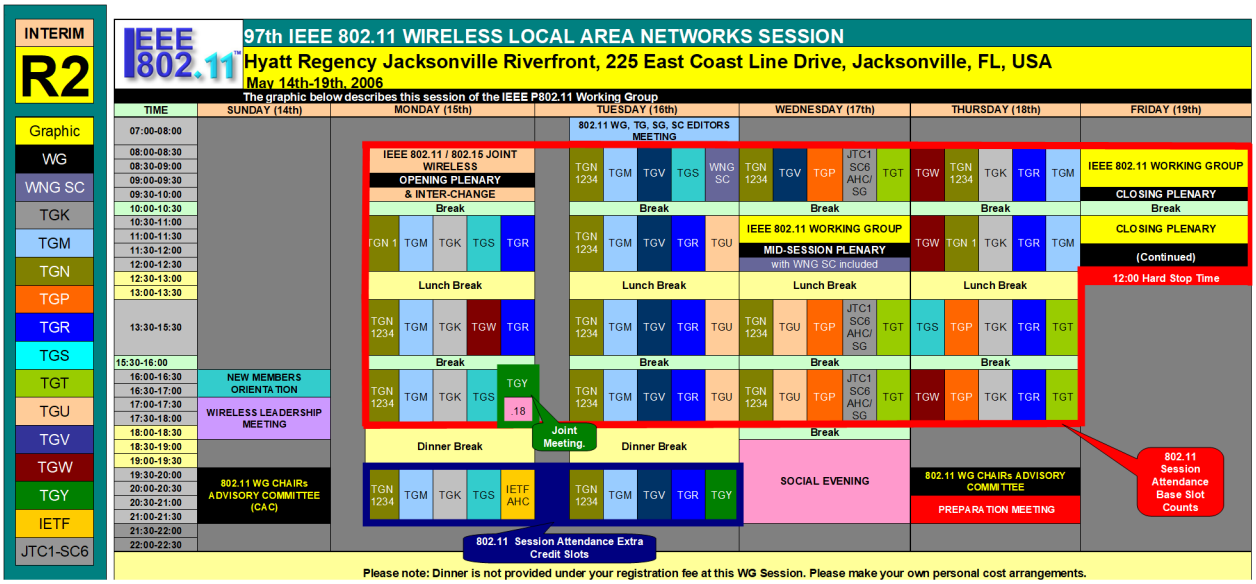

Figure 3.6.2.1 – Typical 802.11 WG Meetings during Interim session

3.6.3 Session Meeting Schedule

802.11 Interim and Plenary sessions start with an opening plenary meeting followed by scheduled TG, SG, and/or SC meetings. Midway through the week a mid session plenary meeting is held. TG, SG, and/or SC meetings continue. The CAC meets typically Sunday evening and Thursday evening. A final closing plenary meeting is held to close the session. Start times and end times are published at least 30 days in advance. Active 802.11 WG session hours are defined from 8:00 am until 9:30 pm from the beginning of the 802.11 WG Opening Plenary through the end of the 802.11 WG Closing Plenary.

3.6.4 Session Attendance

Attendance at WG, TG, SG and/or SC meetings is recorded electronically. If electronic recording is not possible, manual written documentation will be used. Each attendee is responsible for recording attendance. The mechanism for recording attendance is described in the opening reports of the WG Opening Plenary. Each attendee is expected to only sign in for the meeting designation that they are attending in that time slot. Time slots are defined as WG meeting hours as defined in the approved Agenda graphic for the interim or plenary session in progress. It is expected that attendees have participated in at least 75% of the designated meeting they have signed in for. Failure to sign in may impact voting rights (see section 7 of this document). Inability to sign in should be reported to the WG Vice-Chair responsible for attendance recording.

Occasionally an attendee may wish to record their participation at a meeting (as required by IEEE-SA rules), but does not want (or is not entitled) to claim attendance credit. For example, the attendee may have been present for less than 75% of the slot. Such an attendee should send an email once per session to the WG Vice-Chair responsible for attendance to record the attendee's presence.

3.6.5 Session Meeting Etiquette

During any WG, TG, SG and/or SC meetings cell phones must be shut off or in the vibrate mode of operation, in order not to interrupt the meeting. Electronic communication (e.g. email, instant messaging, and social networking) with the Officers conducting official meetings shall be deferred until after the meeting; with the following exceptions:

- Officers may access the 802.11 website and documentation server as necessary to conduct business

- The secretary may receive electronic communication/transmissions of presented material for inclusion in the minutes
- Officers conducting a meeting are permitted to record their attendance.

The use of audio and/or video recording of any 802.11 meeting is specifically prohibited. Still photography is only permitted by a public request and permission of the meeting attendees via the WG Chair, and is not for commercial purposes.

Meetings are run in an orderly fashion, and outbursts or other disruptions during a meeting are not tolerated. Conversations whether on cell phones or with other individuals in a meeting should be moved outside the meeting room.

Comments should be directed to the Chair of the meeting in accordance with Robert's Rules of Order and personal comments directed to individuals should be avoided.

3.7 Documentation

All 802.11 documents are disseminated in electronic format only, other than exceptional cases. Documents are only accepted if they adhere to the policies and procedures described below.

An 802.11 document shall be one of the following types:

- Agenda
- Minutes
- Report (from the WG, a TG, SG, SC,a liaison meeting or a ballot), including financial reports
- Submission (Presentations, Motions, Simulation Results, etc.)
- Liaison

3.7.1 Format

Documents with the exception of draft standards and amendments shall be in the current template as specified by the WG Chair. The templates are located on the 802.11 WG website at: http://ieee802.org/11/Documents/format-rules.html.

Draft standards and amendments shall be submitted to IEEE-SA in a format acceptable by the IEEE-SA. Draft standards and amendments shall be made available to the WG in Adobe Acrobat format.

If a submitter is not able to submit in Microsoft Office application format, the document shall be submitted in Adobe Acrobat format, but only as the last resort and agreed upon by the documentation controller, normally one of the WG Vice-Chair(s).

3.7.2 Layout

The layout of draft standards and amendments shall be according to the IEEE-SA Style Guide ([other5]). All other documents shall be based on the current template for Microsoft Word (portrait and landscape; which is available on the IEEE 802.11 website) including the correct document number and revision number.

Documents based on other than Word or PowerPoint applications shall have the following layout:

- Paper size: letter (8.5'x11')
- Margins: top = 0.6', bottom = 0.5', inside and outside = 0.75', gutter of 0.5 and mirror image, headers 0.3' from edge.
- The header is as follows:
  - Times (New) Roman, 14 point, bold, line below
  - Left: the month and year of issue

  - Right: the text "doc: IEEE 802.11-yy/nnnnrm", where yy are the last two digits of the year; nnnn are the digits of the document number and the revision number is indicated by the digit(s) m, starting at zero.
- The footer is as follows:
  - Times (New) Roman, 12 point, line above
  - Left: the text type and status of the document
  - Center: "page n", where n is the page number
  - Right: Primary Submitter name and company name as point of contact.

3.7.3 Submissions

All documents presented to the WG, TG, or SG should be on the document server prior to presentation.

3.7.4 File naming conventions

The file name shall be as shown in the table below. An example of a good filename that conforms to the naming convention is 11-06-0652-00-0000-Motion-to-form-a-study-group.ppt.

The electronic documentation system automatically generates the prefix part of the filename (i.e. the "**gg-yy-ssss-rr-GGGG"** below) from data entered by a document author, and requires that any uploaded file exactly match this prefix.

Table 3.7.5 – File Naming Convention

gg-yy-ssss-rr-GGGG-HumanName.ext **where**	
"gg"	is the 802 group 11
"yy"	is the last 2 digits of the year the document number is obtained
"ssss"	is the sequence number of the document "0001" is reserved for the 802.11 WG OM
"rr"	is the revision number
"GGGG"	Is the group code identifying the WG, TG, SG, or SC to which the document assigned or presented. Examples of group codes: 0000 – WG 000z – TGz Tvws – TVWS SG The electronic documentation system provides a mapping of well-known terms (e.g. TGz) to group code (e.g. 000z).
"HumanName"	The human name should be as short as possible (please use either a dash or underscore for the coupling letter). Try to avoid adding the TG in the name.
ext	Is the commonly used 3 or 4 letter file extensions: .doc/.docx for Word, .ppt/.pptx for PowerPoint, .pdf for Adobe Acrobat compatible files.

3.7.5 Agendas

There are two types of agendas: Working Group and Sub Group (i.e., TG, SG, and SC).

For a Sub Group meeting during a WG session, there are two options:

1. Maintain a separate document, which should be shown as an "Agenda" on the bottom left of the printed page. This is a submission on the document server using document, presentation or spreadsheet formats and using appropriate 802.11 submission templates for this purpose.
2. Include the agenda as a Tab in the WG agenda document by emailing it to the WG chair.

The WG agenda is a spreadsheet that includes the following:
1. A graphic showing overall use of time during the session.
2. One or more tabs for the WG plenary meeting agendas.
3. A list of a document references for agendas posted on the document server corresponding to Sub Group option 1 above.
4. One or more tabs supplied by Sub Groups containing their agendas corresponding to Sub Group option 2 above.

NOTE – there are timing requirements on the posting of agendas prior to meetings (see sections 4.6.2, 4.6.3, and 4.7.4 in this document). The choice of format by the TG does not affect these requirements.

3.8 Motions Modifying Drafts

Motions modifying drafts may be made at appropriate times during meetings.
Complex technical changes to a draft shall be in a submission that has been accepted by document control according to document formats specified in section 3.7 of this document and has been made available electronically for a period of not less than four active 802.11 WG session hours. The TG chair determines if a technical change is sufficiently complex to require a submission.

When a CRC is following the "Accelerated process" for completion of a WG letter ballot, and is not meeting during an 802.11 WG session, any submission containing changes to the draft shall be on the server and announced to the appropriate TG reflector no less than 72 hours before any motion is made related to that submission.
NOTE – when a CRC is meeting coincident with an 802.11 session, it is subject to the four hour rule described in the previous paragraph.

3.9 Draft WG Balloting

A draft must successfully pass a WG letter ballot before it can be forwarded to the 802 EC for approval for Sponsor Group voting (see section 7.2 in [rules3]. All letter ballots shall be conducted by electronic balloting. The policies and procedures governing WG letter ballots, comment resolution and confirmation letter ballots are contained in the 802 LMSC Policies and Procedures (see section 7.0 in [rules3]).

Draft standards and amendments are posted to the IEEE 802.11 WG website in the members' area.

The following additional requirements are imposed within 802.11 WG.

3.9.1 Draft Standard Balloting Group

The 802.11 WG ballot pool consists of all 802.11 Voters as of the close of day the ballot distribution was completed, as determined by the WG Chair.

3.9.2 Draft Standard Balloting Requirements

A draft standard (or amendment) is sent to WG ballot using the procedure below.
There is a two-step approval process before a draft can be balloted:
- Approval in a TG
- Approval in the WG

It is the responsibility of the TG to ensure that the draft is ready for balloting, i.e. that it is complete (e.g. no place holders or notes for future action, editing, or clarifications) and of sufficient quality. TGs are encouraged to perform an internal review / comment resolution cycle before bringing a draft to the working group for ballot. Failure to prepare adequately will result in

a large number of comments, and will probably result in a failed ballot. It also antagonizes working group voters. The progress of a draft is accelerated by taking a more cautious route to initial ballot, resulting in a shorter overall period of comment resolution.

Before a draft is submitted to 802.11 WG letter ballot, it shall meet all the following requirements:

In the Task Group:

1. Either the draft to be balloted, or the precursor draft to be edited, as appropriate, must be available on the 802.11 website in the members area, and announced on the 802.11 WG reflector
2. If any changes need to be made to this draft before it can be balloted by the WG, these changes, whether technical or editorial, shall be described in one or more submissions approved by vote in the TG.

   For initial and recirculation (once a ballot has passed with at least 75% approval) ballots, the TG approves submittal to WG for WG letter ballot. Motion templates are provided in the latest version of document 11-08-762 on the mentor server.

In the Working Group:

1. The availability of the draft (or precursor draft) must be announced on the 802.11 WG email reflector during or prior to the meeting slot in which approval of any WG ballot on the draft is considered.
2. Approval of the WG is required to start an 802.11 WG letter ballot, either by motion in a WG meeting or by a fifteen-day electronic ballot. The wording of the approval motion mirrors the wording of the approval motion made in the TG.

A recirculation ballot shall be accompanied by a spreadsheet showing how comments have been resolved from the previous ballot, and a red-line version of the draft standard showing the changes of the previous draft. Comments shall be made referenced to the clean version, but the redline version is provided to demonstrate the scope of the recirculation ballot.

For an 802.11 WG letter ballot to be considered valid, the abstention rate must be less than 30%. The ballot shall close at 23:59 USA Eastern Time (ET) on the date specified on the ballot. If the ballot has not achieved a greater than 50% return rate by the specified closing date (see section 9.6 in [rules5], the ballot may be extended to close when a 50% return of the balloting group is received. This extension for receipt of a 50% return shall not be longer than 60 days.

The TG shall respond to comments that are received during the ballot, regardless of whether the comment is associated with a vote, or from a member of the voting pool. Comments received after the close of balloting will be provided to the TG. The TG shall acknowledge the receipt of these comments to the initiator and take such action the TG deems appropriate.

3.9.3 Formatting Requirements for Draft Standard and Amendments

The draft must be provided in the current IEEE electronic format (see [rules2], [other5]. At a minimum this shall be completed prior to sponsor ballot. However it is preferable that the draft be maintained in the IEEE electronic format throughout its development.

3.9.4 Accelerated process for completion of WG Letter Ballot

Towards the end of WG letter ballot, an accelerated process is defined to permit rapid ballot/resolution cycles.

Once a project has been given conditional approval to proceed to sponsor ballot by the 802 EC (see section 12 in [rules4]), the following process applies:

1. The WG chair delegates resolution of any comments received in subsequent WG letter ballots on the project's draft to a comment resolution committee (CRC). [1]
    a. The project's TG chair is also chair of this CRC.
    b. The CRC is subject to IEEE-SA anti-trust and patent policies.
    c. The CRC will publish minutes of its meetings as 802.11 submissions.
    d. The CRC meets together (either in person, or in teleconferences, subject to the LMSC WG P&P rules about notification of such meetings) in order to resolve comments.
    e. The CRC may vote to approve comment resolutions (75% approval required).
    f. Any 802.11 voting member may vote at any CRC meeting.
    g. Only voting members of 802.11 may vote in the CRC.
2. Once comment resolution is complete (as determined by the CRC chair) and any modified draft is available, the WG chair will start any necessary WG recirculation ballots.

3.10 Mandatory Draft Review (MDR)

The MDR is a review process that all 802.11 drafts shall complete prior to entering sponsor ballot. The goal of the MDR is to improve the editorial quality of drafts before they are sent to sponsor ballot, addressing specific areas that have caused problems in past project. The MDR process is described in the latest version 11-11/0615, which is definitive.

The MDR process requires the consensus of the technical editors to make it work. As one goal of this process is to learn from problems experienced in projects, and also from performing the MDR itself, it is expected that the MDR process document will be updated relatively frequently. Any such changes will be brought to the Editors' Meeting for review and approval.

3.11 Summary of Types of Balloting / Voting used in 802.11

The following types of balloting / voting are used in 802.11:

Type	Description	Who can vote?
Working Group (WG) Motion	A motion made during an 802.11 plenary meeting. Motions External (ME) affect or approve output documents that are sent to the EC or otherwise communicated outside 802.11. Such a motion requires a mover and a seconder, even if the motion is made "on behalf of TG<x>". Motions Internal (MI) are all other motions. MI may be made in the WG "on behalf of TG<x>" provided that the same motion passed in the TG. In this case, it is brought by an officer of the TG, and no second is required.	802.11 voters present at the meeting
WG Letter Ballot	An electronic ballot used to make decisions outside an 802.11 plenary meeting. Normally these are used for ballots on drafts of the form "Should P802.11<x> Draft <y> be forwarded to Sponsor Ballot>". Exceptionally ballots on other topics are conducted as	802.11 voters (for a new ballot) or those in the ballot pool (for a recirculation ballot). The ballot pool for a draft is frozen at the voting membership of

[1] The WG chair can announce this delegation at the meeting at which the request for conditional approval is approved by the 802.11 WG: "Once the request for conditional approval to proceed to sponsor ballot is granted to 802.11<x>, it is operating under the Accelerated process described in our OM. I delegate the responsibility of resolving comments to a CRC chaired by <name>, conditional on the EC granting this approval."

	determined by the WG chair.	802.11 when the draft first reaches 75% approval.
Task Group (TG) Motion	A motion made during a TG meeting during an 802.11 session. A passing TG motion is required before a motion can be brought before the WG "on behalf of TG<x>". Such motions typically include approving going to ballot and any output documents, such as a report to the EC. NOTE—this requirement does not stop an individual from bringing a motion in the WG (e.g. if the TG ran out of time, or the need for the motion was not understood before the TG adjourned), but the normal, orderly conduct of business requires this to be an exception, not the rule.	802.11 voters present at the meeting.
Standing Committee (SC) Motion	A motion made during an SC meeting during an 802.11 session.	Any person present at the meeting.
Study Group (SG) Motion	A motion made during an SG meeting during an 802.11 session.	Any person present at the meeting
Straw Poll	Straw polls are used to determine the opinion of those present at a meeting. They are typically used to select between alternatives before spending (potentially lengthy) time crafting a motion that has a better chance of success. Straw polls have no formal effect; their outcome is not binding on the operation of any group. When a TG breaks into "ad-hocs", it is formally recessed. When in TG ad-hocs, no motions are in order. Because straw polls have no formal effect, they can be used in TG ad-hocs to determine the opinion of members – for example, to determine if there is sufficient support to make it worthwhile to bring a motion in a subsequent TG meeting. A TG ad-hoc can distinguish between different types of straw poll if it so wishes. This is just a matter of labeling and has no effect on the meaning of the result. Regardless of what the TG ad-hoc calls the straw poll, it should make clear to its members that it is a straw poll, and that it has no formal effect.	Any person present at the meeting

4 Task Groups

4.1 Function

The function of a Task Group (TG) is to produce a draft standard, recommended practice, guideline, supplement, or portion of a draft standard. These shall be within the scope of the IEEE LMSC, the charter of the WG and under an approved PAR as established by the 802 EC and approved by the IEEE Standards Board. After the publication by the IEEE of the standard, recommended practice or guideline, the function of the TG is complete and its charter expires (see section 4.8 of this document). The 802.11 WG maintains published 802.11 standards (see section 5.0 item f in [rules5]). All business brought to the floor of the WG that deals with a topic assigned to a TG shall be automatically referred to the TG by the WG Chair, without discussion on the floor of the WG.

4.2 Task Group Chair

The TG Chair shall be appointed by the WG Chair and confirmed by a WG majority approval. The TG Chair is re-affirmed every 2 years: one session after the WG Chair is elected.

The TG Chair is required to confirm that the function of secretary is performed for each TG meeting. TG meetings are not allowed to function without a secretary.

4.3 Task Group Vice-Chair

TG Vice-Chair is elected by a TG majority approval and confirmed by a WG majority approval. The TG Vice-Chair is reaffirmed every 2 years; one session after the WG Chair is elected.

4.4 Task Group Secretary

The TG Secretary shall be appointed by the TG Chair and confirmed by a TG motion that is approved with a minimum 50% majority. The TG Secretary is re-affirmed every 2 years; one session after the WG Chair is elected.

The minutes of meetings taken by the TG Secretary (or designee) are to be provided to the TG Chair in time to be available to the WG Chair for publication 30- days after close of the session.

The minutes of the meeting are to include documents produced by the voting process and document list. See section 10 of this document (802.11 Guidelines for Secretaries) for details on content and form of minutes.

4.5 Task Group Technical Editor

The TG Technical Editor shall be appointed by the TG Chair and confirmed by a TG majority approval.

The TG Technical Editor is responsible for:

- Organizing, maintaining the draft standards for the TG in the format used by the IEEE standards department.
- Preparing technical drafts following the editor's guidelines in section 11 of this document.
- Preparing an update of the draft standard as soon after a session as possible, as directed by the TG.
- Proof reading and coordinating changes of documents edited by IEEE staff.
- Sending the TG Chair the following:
  - The Adobe Acrobat PDF file of the standard ([other3]).
  - A word processing document file in a format that is acceptable by the IEEE standards department.

4.6 Task Group Membership

Participants in the 802.11 WG make up the TG membership. The TG shall follow the operating policies defined for TGs in the 802.11 WG.

4.6.1 Rights

The rights of a TG participant that is an Active member of 802.11 include the following:

- To join the TG email reflector.
- To vote at meetings if present providing the participant is qualified under the WG voting policies and procedures.
- To examine all working draft documents.
- To lodge complaints about TG operation with the WG Chair.

4.6.2 Meetings and Participation

All TG meetings are open to participants of any status. Attention is drawn to the registration requirements for those attending 802 Plenary and Interim Sessions where TG meetings also occur. WG Voter members have the right to participate in decisions of the WG. The TG Chair may grant participants who are not 802.11 WG Voters the privilege of participating in discussions.

A TG will normally meet during the week of the 802.11 WG Session. The WG Chair determines, taking into account the TG status, if a TG meeting is required and assigns time slots for meeting during the session. Depending on the workload, TG meetings can be held between the 802.11 WG Sessions as often as required and as recommended by the TG membership with approval by the WG Chair. A meeting notice and agenda must be distributed on the TG email reflector at least 30 days prior to any meeting. This notice will include as a minimum the date, time, location, host, hotel details, travel details if necessary and a stated purpose. TG meetings that are not part of an 802.11 WG Session do not count towards 802.11 WG voting rights.

4.6.3 Teleconferences

Teleconferences are a means to prepare input for sessions provided that the teleconference date, time, agenda, and arrangements are announced on the TG email reflector at least 10 calendar days prior to the teleconference date, except for the Regulatory Standing Committee, which has a 5 calendar day announcement requirement, and that the minutes (agenda, list of attendees, and proceedings) are kept and published as WG documents within 7 days of the teleconference. Teleconferences may not be held more frequently than twice per week.

4.7 Operation of the Task Group

The TG's primary responsibility is to produce a draft standard, recommended practice, or guideline in a reasonable amount of time for review and approval by the WG.

The operation of the TG is governed by this operations manual and the procedural documents described in section 1 of this document.

4.7.1 Task Group Chair Functions

The TG Chair may decide non-technical issues or may put them to a vote of the TG.[2] The TG participants and the Chair decide technical issues by vote. The TG Chair decides what is non-technical and what is technical.

The TG Chair is responsible for presiding over TG sessions.

The TG Chair shall operate the TG in an unbiased fashion. To maintain impartiality, the TG Chair shall refrain from taking sides in debate on technical motions.

It is the responsibility of the TG Chair to lead the TG in producing a quality draft standard in a timely fashion as specified by the relevant PAR.

[2] The chair is advised not to make decisions that are potentially controversial, because doing so is likely to lead to an appeal. The meeting then gets mired in procedure.

4.7.2 Task Group Vice-Chair Functions

The TG Vice-Chair assists the TG Chair in carrying out the TG Chair Functions. The TG Chair may delegate the control of the meeting to the Vice-Chair, who is responsible to lead the TG when, for example, the TG Chair wants to participate in the TG debate.

4.7.3 Voting

WG Voters are entitled to make motions on the matters before the TG and all participants may participate in straw polls.

The TG Chair defines motions to be either technical or non-technical. On a technical motion, a vote is carried by a minimum 75% approval of the sum of those voting "Approve" or "Do Not Approve". All procedural motions described in [rules6] require the approval levels described in [rules6]. On other motions, a vote is carried by a greater than 50% approval of the sum of those voting "Approve" or "Do Not Approve".

The decision to define a motion as technical or non-technical rests with the TG Chair. Generally a technical motion is defined as a motion that will materially affect the content of a draft. This is because a draft itself will ultimately be subject to a 75% majority vote at both WG and 802 LMSC ballot.

The vote by the TG to request the WG to submit a draft standard or a revised standard to the WG ballot group is considered to be a technical vote.

4.7.4 Task Group Chair's Responsibilities

The main responsibility of the TG Chair is to ensure the production, and to guide through the approval and publication process, a draft standard, recommended practice or guideline, or revision to an existing document as defined by the relevant PAR. The responsibilities include:

- Issue a notice and agenda for each approved meeting at least 30 days prior to start.
- Issue a notice and agenda of approved teleconferences by issuing a notice and agenda for each, at least 10 days prior to start.
- Ensure that there is a Recording Secretary for each meeting.
- Issue meeting minutes and important requested documents to all members. The meeting minutes are to include:
    - next meeting schedule and objectives
    - agenda as revised at the start of the meeting
    - voting record including resolution, mover and seconder, and numeric results
- Maintain liaison with other organizations at the direction of the WG Chair. All liaison and liaison statements shall be approved by the WG or the WG chair.
- Work with the WG Chair and Technical Editor to complete the publication process for the draft standard, recommended practice or guideline.

Sufficient detail shall be presented in the meeting minutes to allow a person knowledgeable of the activity, but not present at the discussion, to understand what was agreed to and some of the discussion (see section 10 of this document). Minutes shall be distributed within 30 days of the meeting to the attendees of the meeting, all TG participants and all liaison groups.

At each session in which the TG has meetings the TG Chair shall report as follows:

- A status (PowerPoint) report (achievements, teleconference schedule, goals for next meeting) for the closing plenary, to be made available before or during the Thursday night CAC meeting.
- A summary (html) report to be posted to the 802.11 web site no later than one week after the close of the session.

4.7.5 Task Group Chair's Authority

To carry out the responsibilities cited in section 4.7.4 of this document, the TG Chair has authority to:

- Decide which issues are technical and which are non-technical.
- Assign and unassign subtasks and task leaders or executors, e.g. secretary, subgroup leader, etc.
- Speak for the TG to the WG.
- Determine if an organization or consortium is dominating the TG, and, if so, raise the issue to the WG Chair.
- Be representative of the TG during coordination and interaction with IEEE staff.

4.8 Deactivation of a Task Group

The 802.11 WG may deactivate a TG it has formed. After the objective of the TG is complete, its charter expires and the TG is deactivated by the WG. If the TG has not completed its work within its allotted period of time, the TG can request to be disbanded by the 802.11 WG or request an extension of time. The TG may request the WG to deactivate the TG prior to the expiration of the PAR. A motion to deactivate a TG requires 75% approval.

5 Study Groups

5.1 Function

The function of a Study Group (SG) is to complete a defined task with specific output and in a specific time frame. Once this task is complete, the function of the SG is complete and its charter expires.

The normal function of a SG is to draft complete PAR and Criteria for Standards Development (CSD) documents (see [rules5]) and to gain approval for them from the 802.11 WG.

5.2 Formation

A SG is formed when sufficient interest has been identified for a particular area of study within the scope of 802.11 WG. Sufficient interest is determined by a motion in the WG. An 802.11 SG is initiated by 50% approval of the 802.11 WG and is subject to approval by the 802 EC. During this approval process the 802 EC decides whether a SG is within the scope of 802.11 WG, should be moved to another WG or should be set up as a 802 Executive Committee Study Group.

Mechanisms that are available for building interest in a SG include presentations at the Wireless Next Generation (WNG) Standing Committee and a call for interest. A call for interest may be made by any attendee at an 802.11 WG opening plenary.

5.3 Continuation

A SG is authorized from plenary session to plenary session. If the SG has not completed its work within that time, a request must be made to the WG for an extension for up to additional 6 months. A request for SG extension is voted upon at an 802.11WG closing plenary meeting.

5.4 Study Group Operation

SGs follow the operating procedures for TGs specified above in section 4.7, with the exception of voting as detailed below.

5.4.1 Study Group Meetings

SG meetings held as part of an 802.11 WG Plenary or Interim sessions count towards 802.11 WG voting rights.

5.4.2 Voting at Study Group Meetings

Any participant attending a SG meeting may participate in SG discussions, make motions and vote on all motions (including recommending approval of a PAR and CSD). A vote is carried by 75% of those present voting “Approve” or “Disapprove.”

NOTE—the 802 LMSC WG P&P [rules5] sets a threshold of 75% for all votes in a study group, regardless of the type of that vote. This takes precedence over the usual Robert’s Rules of Order thresholds for procedural votes.

5.4.3 Reporting Study Group Status

Progress of the SG is presented at the closing 802 EC meeting of each IEEE 802 plenary session by the WG Chair.

6 802.11 Standing Committee(s)

6.1 Function

The function of the 802.11 Standing Committee (SC) is to perform a specific function as defined by the WG Chair.

6.2 Membership

Participants from the 802 .11 WG make up the SC membership.

6.3 Formation

The Chair of the WG has the power to appoint SCs when enough interest has been identified for a particular area of study within the scope of 802.11 WG. To determine that sufficient interest has been identified, the formation of the SC shall be ratified by a simple majority of the WG.

6.4 Continuation

SCs are constituted to perform a specific function and remain in existence until the specific function is no longer required at the WG Chair’s discretion.

6.5 Standing Committee Operation

SCs follow the operating procedures for SGs specified section 5 of this document.

6.5.1 Standing Committee Meetings

Attendance at SC meetings held as part of an 802.11 WG session counts towards 802.11 WG voting rights.

6.5.2 Voting at Standing Committee Meetings

Any person attending a SC meeting may participate in SC discussions, make motions and vote on all motions. A vote is carried by 75% of those present voting “Approve” or “Disapprove.”

6.6 Standing Committee Chair

The Standing Committee Chair is appointed by the WG Chair and is re-affirmed by the WG majority approval. The Standing Committee Chair is re-affirmed every 2 years; one session after the WG Chair is elected.

6.7 Topic Interest Groups

A "topic interest group" (TIG) is a standing committee of the 802.11 working group that is formed to progress a specific topic.

A TIG might be used prior to a formal study group to raise awareness and understanding of a potential study group.

A TIG follows all the rules for a WG11 standing committee.

A TIG is formed by WG motion and dissolved as determined by the WG chair.

A TIG group is formed after discussion during a WG plenary during which the goals of the TIG are identified, and a motion to form the TIG achieves a simple majority.

Typically a TIG will exist for no more than 6 months.

6.8 Ad-hoc Group(s)

An ad-hoc group may be created to progress work on specific topics by either the WG or a TG.

There are no formal rules for the operation of an ad-hoc group, although it may well define its own informal operating process. An ad-hoc group cannot make any decisions (i.e., no motion is in order at an ad-hoc group meeting), although it can test the will of its members using straw polls, which have no formal effect.

The 802.11 agenda may reserve meeting time for ad-hoc groups, in which case attendance at such ad-hoc group meetings counts towards the session attendance.

7 Voting Rights

Voting rights and membership are described in section 7 of [rules5].

A participant belongs to one of five levels of membership: Non-Voter, Aspirant, Potential Voter, Voter, and Former-Voter, as described in section 7.1 below.

All participants can vote in SG and SC meetings. Only Voters have the right to make motions, 2nd motions and vote during WG and TG meetings. However, WG and TG Chairs may permit all participants to participate in straw polls, discussions and debates.

It is the responsibility of all participants to make the WG Chair and the WG Vice-Chair responsible for membership, aware of any changes to their contact information for the purpose of maintaining the IEEE 802.11 voting membership database.

7.1 Earning and Losing Voting Rights

A participant earns voting rights by properly attending 802.11 WG interim and plenary sessions.

A "properly attended session" is an 802.11 WG interim or plenary session at which the participant has

- Recorded their contact details and affiliation.
- Recorded attendance for 75% of the "in session hours" (i.e. morning and afternoon) meeting slots (these are indicated as such on the session graphic in the WG agenda). Evening meetings may be substituted for any of the "in session hours" meetings.
- Registered for the session and paid any required meeting fee.

As a courtesy, after a session the WG officer responsible for maintaining membership will send an email to an individual whose membership status has changed informing them of the change. The email will include instructions on any new entitlements or obligations and any newly acquired membership number or credentials.

It is the participant's individual responsibility to ensure that they follow the obligations described below.

7.1.1 Non-Voter

A Non-Voter is a participant who is described by one or more of the following:

- Is attending a session for the first time.
- Never gained any other participant status (i.e. attends some meeting slots, but never enough to "properly attend" a session)
- Gained some other status, but lost it due to failing to properly attend 1 of 4 consecutive plenaries (one of which may be substituted by an interim)
- Gained voting status, and failed to return the required mandatory WG letter ballots

A Non-Voter who properly attends a session becomes an Aspirant member at the end of that session.

A Non-Voter can only gain voting status by following the transition: Aspirant->Potential Voter->Voter. Any previous attendances do not count towards this.

7.1.2 Aspirant

An Aspirant becomes a Potential Voter at the close of the second properly attended session.

Failure to properly attend 1 of 4 consecutive plenary sessions (a single interim session may be substituted for a plenary) results in the Aspirant becoming a non-voter.

7.1.3 Potential Voter

A Potential Voter becomes a Voter at the start of the next attended plenary session provided that they have:

- Recorded their contact details and affiliation.
- Recorded attendance for at least one 802.11 meeting slot.
- Registered for the session and paid any required meeting fee.

A Potential Voter's badge will contain an 802.11 voting token at the start of a plenary session. (NOTE—a potential voter's badge will not contain an 802.11 voting token at the start of an interim session, because voting status is only gained at the start of plenary sessions.)

Failure to properly attend 2 of 4 consecutive plenary sessions (a single interim session may be substituted for a plenary) results in the Potential Voter becoming an Aspirant.

NOTE – one common cause for complaint ("where's my voting token, I had one at the last meeting") is a potential voter who attends a plenary session (i.e., having a voting token on their badge), but who records attendance only for non-802.11 meetings. Such a person fails to meet the 802.11 requirements to become a voter, and will not have a voting token on their badge at the subsequent interim session.

7.1.4 Voter

A Voter's badge will contain an 802.11 voting token.

A Voter remains as such provided:

- The Voter continues to properly attend 2 of 4 consecutive plenary sessions (a single interim session may be substituted for a plenary).
- The Voter responds to 2 out of 3 consecutive mandatory WG letter ballots, where a valid response is received in the initial mandatory WG letter ballot or any of its subsequent recirculation ballots.
- NOTE – A voter's status is evaluated at completion of a WG letter ballot series.

If a Voter fails to properly attend 2 of 4 consecutive plenary sessions (a single interim session may be substituted for a plenary), the voter will become an Aspirant if they then have properly attended 1 of 4 consecutive plenary sessions or will become a Non-Voter if they have properly attended 0 of 4 consecutive plenary sessions.
NOTE – The transition to Non-Voter will occur if the meetings supporting their Voter status were a plenary and the following interim such that the plenary is now 5 plenaries ago.

7.1.5 Former-Voter

A former voter member of 802.11 continues to retain the following rights:

- To join the WG maintained email reflectors
- To post documents on the 802.11 document server

NOTE – A Former-Voter might need to prove their status if the records maintained by the WG leadership do not include this information.

7.2 Voting Tokens

Voting Tokens are printed on the participant's name badge and are used to vote on motions during WG and TG meetings, unless a roll call vote is requested by a WG voter or directed by the WG Chair. Voting tokens are only added for Potential Voters at plenary sessions. Voting tokens are valid for the duration of the session in progress. If a Voter loses their voting token (name badge) during the session, they must report it to the WG Chair or WG vice-Chair to obtain a replacement from the meeting organizers.Access to: Email lists, Teleconferences, Document server and the 802.11 Drafts

8 Access to: Email lists, Teleconferences, Document server and the 802.11Drafts

8.1 Email lists

The WG maintains an email list on which all meetings and ballots are announced, and which is used for discussion of matters relevant to all 802.11 participants (STDS-802-11@LISTSERV.IEEE.ORG). In addition a separate list is provided for each active subgroup.

Any Active 802.11 participant or Former-Voter is entitled to be a member of any of these Email lists. The 802.11 website provides links to allow an Active 802.11 participant or Former-Voter to manage this access. An Active 802.11 participant or Former-Voter that desires access to the IEEE 802.11 WG email reflector(s) may submit a request for such access using the web-based IEEE 802.11 reflector request http://www.ieee802.org/11/Reflector.html.

Postings to any of these lists are restricted to list members, i.e., only a member of a list (identified by email address) can post to that list.

The WG also maintains a read-only reflector, to which all emails to the main WG list are copied. Anyone can join this list. Members of this list cannot post to the list.

8.2 Teleconferences

WG (and subgroup) Teleconferences operate under the rules described in this 802.11 OM.

The agenda shall include a summary review of the relevant antitrust and patent P&P and shall include a call for essential patents, when a WG or subgroup is responsible for producing or potentially responsible for producing a standard, amendment or recommended practice. Minutes shall be recorded and posted on the 802.11 document server.

WG (and subgroup) teleconferences are not permitted to make formal motions, with the exception of when a TG is operating under the accelerated process and when it is a sponsor ballot comment resolution committee (CRC).

A TG operating under the accelerated process follows the rules in section 3.9.4 of this document which permit voting on formal motions on teleconferences.

Sponsor ballot CRC teleconferences, albeit announced in the WG and consisting of WG participants, operate under the authority of the sponsor, and are therefore permitted to vote on formal motions.

Teleconferences are generally approved during the closing 802.11 plenary, and cover the period from 10 days after that plenary to 10 days after the next closing 802.11 plenary. Any changes to the teleconference schedule after the closing plenary shall be made by announcement to both the WG and relevant group's reflector at least 10 days in advance.

Details of 802.11 teleconferences are posted on the 802.11 website. It is the responsibility of the relevant chair to provide bridge details in advance to the WG vice chair responsible for publishing these details.

Anyone may attend an 802.11 teleconference.

8.3 Public Document Server

The 802.11 public documents are kept on the IEEE mentor system https://mentor.ieee.org/802.11/documents. Anyone may read these documents.

Only an Active 802.11 participant or Former-Voter may post documents on the 802.11 document server.

8.4 Private Members-only Document Server

Access to drafts and related documentation is provided on the private area of the 802.11 website http://www.ieee802.org/11/private/index.shtml. Active 802.11 participants are entitled to access the private area.

Credentials will be emailed to new active 802.11 participants after the session in which they become an active 802.11 participant. These credentials are updated once a year.

Access to drafts is provided to all attendees at an 802.11 plenary or interim session.

8.5 Responsibilities of an 802.11 Sponsor Ballot CRC

An 802.11 Sponsor Ballot CRC shall make available on the 802.11 member's area any drafts it sends to sponsor ballot.

An 802.11 Sponsor Ballot CRC shall make available on the 802.11 document server all sponsor ballot comments received and any comment resolutions that it approves.

All submissions presented to and all minutes of an 802.11 Sponsor Ballot CRC shall be posted to the 802.11 document server.

9 IEEE 802.11 WG Assigned Numbers Authority

The objective of the Assigned Numbers Authority (ANA) is to conserve and allocate identifier values in the IEEE 802.11 standards and approved amendments.

9.1.1 WG ANA Lead

The WG ANA Lead shall be appointed by the WG Chair and re-affirmed by a WG majority approval. The WG ANA Lead shall be responsible for approving and maintaining a central repository of identifier values in a document as defined in section 9.1.2 of this document.

9.1.2 ANA Document

A document containing the identifier values shall be made available on the server during interim and plenary sessions and posted on the IEEE 802.11 WG website. Any updates shall be posted on the IEEE 802.11 WG website within 15 days following the close of the 802.11WG interim or plenary session.

9.1.3 ANA Request Procedure

A request for an assigned number for new identifier values shall be made by using the following procedure:

1. A draft amendment or standard that has been approved by the WG or a TG and that requires allocation of numbers from the ANA shall contain placeholders for such numbers using the sequence <ANA>, and should not presume any particular value will be assigned.
2. The TG chair or technical editor shall prepare requests for each such <ANA> flag using the forms provided by the ANA and documented in the ANA database document.
3. The ANA shall circulate the requests and tentative assignments to the 802.11 editor's reflector and ask TG editors to check for any conflict. Typically the requests are generated following a session. The ANA should respond to the request within 1 week. The ANA shall reject any request that is not properly formed, i.e., does not supply all information required by the ANA form. The last item of any resource will never be assigned and will always automatically be designated as “escape bit/number”.
4. After a period of 1 week has elapsed and no conflict has been reported, the assignments are confirmed and the ANA shall upload an updated database document and notify the WG reflector.
5. An ANA request from an entity external to the 802.11 WG shall be brought to the 802.11 WG for confirmation.
6. An ANA request for a legacy Element ID shall be approved by WG motion. Legacy Element IDs are intended for elements in Beacon and Probe Request/Response frames, and current and future “beacon-like” frames. By default, requests for Element IDs are allocated from the Element ID Extension space.
7. An ANA request for reuse of a previously reserved Element ID shall be approved by WG motion.

9.1.4 ANA Revocation Procedure

The TG that has previously requested an assigned number may request revocation of that assigned number. The request must be approved by a motion in the TG or WG.

9.1.5 ANA Appeals Procedure

An appeal of an assignment of an identifier value may be made by a Voter by following the appeal procedure described in the Policies and Procedures of IEEE Project 802 (see section 9 in [rules3].)

9.1.6 ANA requests from the Regulatory SC

The ANA accepts requests for allocation of numbers from the 802.11 Regulatory (REG) SC, subject to approval by the WG. The purpose of this support is to allow the WG to track rapidly changing regulatory requirements in a controlled way.

The process is as follows:

1. A request to the ANA from the REG SC shall be approved by motion in a meeting of the REG SC. The intent to hold a motion and the supporting documentation shall be announced to the WG on the WG reflector 4 weeks in advance of the motion being considered. Any motion in the REG SC shall be brought to the WG for confirmation.
2. The request shall be accompanied by a submission that can be referenced from the Description field of any allocation (i.e., entry in the ANA database) explaining how that value is used, and providing any additional information that cannot be recorded in the ANA database.
    a. For example, a request for a new operating class would be accompanied by all the information that would go in a draft amendment or standard associated with the value – i.e., the full table row contents.
3. The ANA shall circulate the requests and tentative assignments to the 802.11 editor's reflector and ask TG editors to check for any conflict. Typically the requests are generated following a session. The ANA should respond to the request within 1 week. The ANA shall reject any request that is not properly formed, i.e., does not supply all information required by the ANA form, or does not provide a reference document that fully describes the use of the requested value. The last item of any resource will never be assigned and will always automatically be designated as “escape bit/number”.
4. After a period of 1 week has elapsed and no conflict has been reported, the assignments are confirmed and the ANA shall upload an updated database document and notify the WG reflector.
5. The REG SC can, at its option, update the cited reference document to show the allocated value(s).
6. The ANA will bring any such allocations as a proposed change to TGm when a revision project is active.

10 Requirements and Guidelines for 802.11 Secretaries

Prepare the minutes taking into account the following:

a. Use the template for documents.
b. Make sure the Chair of the group can deliver the minutes to the 802.11 WG chair within 30-days after closure of the session.
c. Use the following in the left side footer: “Minutes”.
d. Make the style of motions such that they are easily identifiable.
e. Numbering the motions is recommended.

Minutes should be short, don’t include every detail of the meeting.
<u>Minutes include the following items:</u>

1. <u>Name of Group</u>
2. <u>Date and location of meeting</u>
3. <u>Officer presiding, including the name of the secretary who wrote the minutes</u>

4. Attendance – The WG Secretary reports the attendance (name, affiliation, met attendance requirement) in the full working group minutes as a report published from the electronic attendance system. Sub-group secretaries shall include attendance records for any meeting held outside a WG Session (e.g. teleconference meeting). The attendance list shall include only the name and affiliation of each meeting attendee.
5. Call to order, chair's remarks
6. Approval of minutes of previous meetings.
7. Approval of agenda
8. Review of Policies and Procedures of IEEE
9. Motions, including mover, seconder and results
10. Straw polls, including name of requestor, if applicable
11. Discussions:
    a. Brief summary of discussion, pros and cons, and conclusions (optional, recommended)
    b. Include name of primary document author
    c. Do not include names of discussion participants
12. Action items, including assignee and date
13. References to submissions (optionally include links)
14. Subgroup reports (WG minutes only)
15. Next meeting—date and location

11 Guidelines for IEEE 802.11 WG and Task Group technical editors

The 802.11 WG Technical Editors and TG Technical editors shall use the following documents (latest revision) as guidelines for developing and maintaining technical drafts for IEEE 802.11 standards and amendments.

a. Document: 11-06-0786-00-0000-802-11-Editors-Guidelines
b. Document: 11-09-1034-00-0000-WG11-Style-Guide.doc

12 Guidelines for comment resolution

Document 11-11/1625, "WG11 Comment Resolution Guide", contains guidelines to assist TGs and CRCs during the process of comment resolution, to properly responding to letter and sponsor ballots.

13 Appendix A: MDR Process Summary

This section summarizes the MDR process (see section 3.10 in this document), for information.

- The MDR should be performed when WG letter ballot is "almost done" – i.e., the last draft in which changes are anticipated to be made during WG letter ballot.
- There are three roles involved in the review: TG editor. WG editor and a TG nominee (usually another editor).
- Process
    - WG editor and nominee review the draft for compliance with the review items.
    - WG editor prepares a draft report that identifies any changes that are necessary to satisfy the MDR.
    - The report is iterated with the TG editor to clarify the findings and achieve consensus on resolution of any required changes.
    - TG editor brings recommended changes before TG for approval.
- Review Items

- Numbering of clauses, subclauses, figures, tables and equations.
- Draft Number Alignment document (11-11/1149) revised to show correct numbering
- Numbering of ANA administered objects.
- Description of MIB variables matches WG802.11 style in 11-09/1034.
- MIB rolled-in to as much of the base document(s) MIB as possible and any compilation errors fixed.
- Compliance to IEEE-SA style and WG style as described in 11-09/1034.

14 Appendix B: Number of Sessions required to become a Voter

Figures C.1 and C.2 illustrate the timeline to become a voter. A new participant must attend two (2) out of four (4) consecutive plenary sessions to achieve voting rights, and on the third plenary session the participant will become a voter. An interim session may be substituted for a plenary session. Only one interim may be substituted for a plenary.

For example, if a new participant attends for the first time at a plenary session and attends only plenary sessions, voting privileges are granted at the third plenary as illustrated in Figure C.1.

March Plenary	July Plenary	November Plenary
B- Non-Voter E- Aspirant	B- Aspirant E- Potential Voter	B- Voter

B – Beginning of Session E- End of Session

Figure C.1 – New participant starting at a plenary session, attending plenary sessions

When a new participant attends for the first time at an interim session, that interim session is substituted for a plenary session. Voting rights are granted at the next plenary session as illustrated in Figure C.2.

Jan Interim	March Plenary	May Interim	July Plenary
B- Non Voter E- Aspirant	B- Aspirant E- Potential Voter	B/E Potential Voter	B- Voter

B – Beginning of Session E- End of Session

Figure C.2 – New participant starting at an interim session

A participant that attends both a March plenary session and the following May interim session (not the January interim) will be a Voter at the beginning of the July plenary session.

15 Appendix C: Membership Flow-Diagram

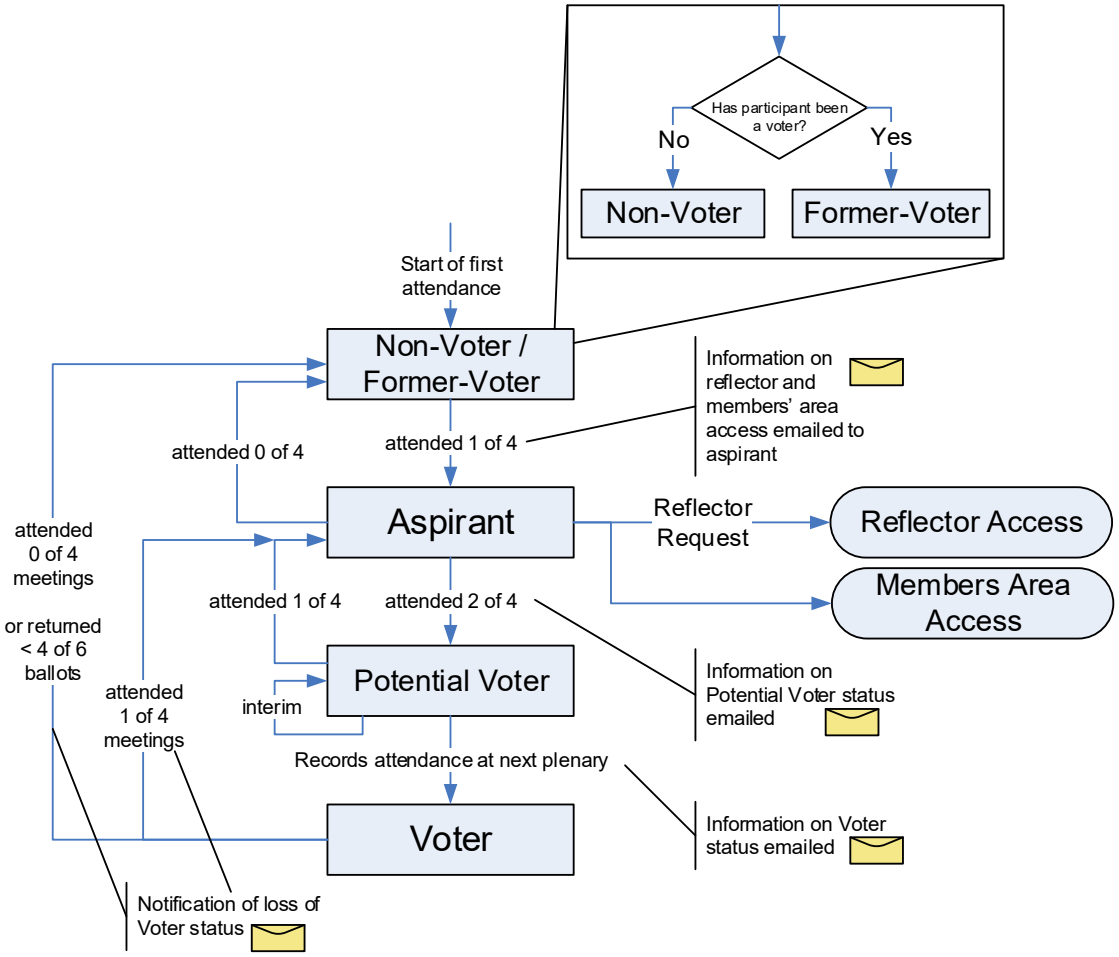

Figure D.1 – Membership Flow Diagram

End.

APPENDIX CB

Email Reflector Request

Member access

If you are an 802.11 participant, use the form below to request access (subscribe) to the 802.11 email reflectors.

If you are not an 802.11 participant, do not fill in the form.

You can check whether or not you are a participant by looking for your name here. If you are listed you are a participant.

Subscriptions to and use of these reflectors are subject to the IEEE 802.11™ WG Policies and Procedures. Note in particular the policy on confidentiality notices, which is repeated at the bottom of this page.

This form offers the choice of adding or removing some or all of the task group and standing committee reflectors. As a paricipant you should subscribe and should remain subscribed to the working group reflector. Don't unsubscribe to the working group reflector unless you do not intend to continue your participation.

Once you are a list subscriber, you can update your subscriptions using this form or, alternatively, you can create a password on the list server here and manage subscriptions yourself.

Non-member access

IEEE 802.11 provides a public reflector, to which all messages on its working group reflector are copied so that members of the public can observe the work of the 802.11 working group. You can join or leave the public reflector here. Anybody may join this list. Subscribers to this list are provided with read-only access (i.e., they cannot post to the list).

There is also a web-based interface through which the public can monitor email traffic on all the reflectors at the following locations:

- 802.11 working group (main reflector)
- Architecture (ARC) SC
- Chair's Advisory Committee (CAC)
- Editors
- TGbi (Enhanced Privacy Protection)
- TGbn (Ultra High Reliability)
- TGbp (Ambient Power)
- TGbq (Integrated mmWave)
- TGbr (Enhanced Light Communications)
- TGbt (Post-Quantum Cryptography)
- Maintenance

Fill in your details:

Name Required

Email Address Required

SA PIN When you log into IMAT, you will see this number. It helps the chair locate your attendance record.

Select the reflectors you would like to join or leave:

The list of reflectors and their purposes is described here.

- ☐ All
- ☐ Working Group
- ☐ Task Group m
- ☐ Architecture (ARC) SC
- ☐ Task Group bi
- ☐ Task Group bn
- ☐ Task Group bp
- ☐ Task Group bq
- ☐ Task Group br
- ☐ Task Group bt

I'm not a robot
reCAPTCHA is changing its terms of service.
Take action.
reCAPTCHA
Privacy - Terms

Subscribe Unsubscribe Reset Form

Policy on confidentiality notices

Many companies automatically append confidentiality notices to the emails originating from their servers. This is not allowed under IEEE rules of openness.

The 802.11 chair will remove your access to a reflector if your emails contain such a statement. If you are affected by corporate confidentiality notices, you can set up an email account outside your corporate environment and under your control. Send an email to the WG Chair or Vice Chair asking for a global change on the email reflectors for the new email address.

Below is an extract from the IEEE 802 LMSC Chair Guidlines, section 2.17, which provides detail on the policy.

> IEEE 802 operates in an open manner. To that end, no material submitted to IEEE 802, or any of its sub-groups, will be accepted or considered if it contains any statement that places any burden on the recipient(s) with respect to confidentiality or copyright. Any communication, including electronic mail, containing language with such restrictive wording will not be accepted or considered.

This page is maintained by Robert Stacey. Comments are welcome.
Copyright (c) the Institute of Electrical and Electronics Engineers, Inc. (IEEE). All rights reserved.

APPENDIX CC

Email Archive

Date Index (Page 269 of 366)

Thread Index

First Page Prev Page Next Page Last Page

- **[STDS-802-11] Nov 2016 WG and TGax meeting minutes**
  - *From*: Al Petrick
  - Date: Sun, 4 Dec 2016 05:19:52 -0500 (EST)
- **[STDS-802-11] Fwd: Re: 802W-0117-January 2017 Interim Session-Room Reservation and Registration Reminder**
  - *From*: Adrian Stephens
  - Date: Sat, 3 Dec 2016 06:52:21 -0500 (EST)
- **Re: [STDS-802-11] Updated "interpretation of special measures" document**
  - *From*: Adrian Stephens
  - Date: Fri, 2 Dec 2016 15:49:31 -0500 (EST)
- **Re: [STDS-802-11] IEEE 802.11 Mandatory Technical Letter Ballot 225 for P802.11ax Draft 1.0 Starts Today**
  - *From*: Sigurd Schelstraete
  - Date: Fri, 2 Dec 2016 14:15:14 -0500 (EST)
- **Re: [STDS-802-11] IEEE 802.11 Mandatory Technical Letter Ballot 225 for P802.11ax Draft 1.0 Starts Today**
  - *From*: gsmith
  - Date: Fri, 2 Dec 2016 12:45:29 -0500 (EST)
- **Re: [STDS-802-11] IEEE 802.11 Mandatory Technical Letter Ballot 225 for P802.11ax Draft 1.0 Starts Today**
  - *From*: Jon Rosdahl
  - Date: Fri, 2 Dec 2016 12:06:58 -0500 (EST)
- **Re: [STDS-802-11] IEEE 802.11 Mandatory Technical Letter Ballot 225 for P802.11ax Draft 1.0 Starts Today**
  - *From*: Mark Hamilton
  - Date: Fri, 2 Dec 2016 11:58:21 -0500 (EST)
- **Re: [STDS-802-11] IEEE 802.11 Mandatory Technical Letter Ballot 225 for P802.11ax Draft 1.0 Starts Today**
  - *From*: Jon Rosdahl
  - Date: Fri, 2 Dec 2016 11:19:05 -0500 (EST)
- **Re: [STDS-802-11] IEEE 802.11 Mandatory Technical Letter Ballot 225 for P802.11ax Draft 1.0 Starts Today**
  - *From*: gsmith
  - Date: Fri, 2 Dec 2016 11:14:56 -0500 (EST)
- **Re: [STDS-802-11] IEEE 802.11 Mandatory Technical Letter Ballot 225 for P802.11ax Draft 1.0 Starts Today**
  - *From*: Sigurd Schelstraete
  - Date: Thu, 1 Dec 2016 17:10:59 -0500 (EST)
- **Re: [STDS-802-11] IEEE 802.11 Mandatory Technical Letter Ballot 225 for P802.11ax Draft 1.0 Starts Today**
  - *From*: Adrian Stephens

- Date: Thu, 1 Dec 2016 14:20:02 -0500 (EST)

- **[STDS-802-11] IEEE 802.11 Mandatory Technical Letter Ballot 225 for P802.11ax Draft 1.0 Starts Today**
  - *From*: Adrian Stephens
  - Date: Thu, 1 Dec 2016 14:17:23 -0500 (EST)
- **[STDS-802-11] TGax special measures declaration doc**
  - *From*: Adrian Stephens
  - Date: Thu, 1 Dec 2016 03:41:52 -0500 (EST)
- **[STDS-802-11] Updated "interpretation of special measures" document**
  - *From*: Adrian Stephens
  - Date: Thu, 1 Dec 2016 02:29:58 -0500 (EST)
- **Re: [STDS-802-11] Liaison statement from 3GPP RAN1 to 802**
  - *From*: Shellhammer, Steve
  - Date: Wed, 30 Nov 2016 13:58:57 -0500 (EST)
- **[STDS-802-11] EN 301 893, version 2.0.7**
  - *From*: Dr. Guido R. Hiertz
  - Date: Wed, 30 Nov 2016 04:21:09 -0500 (EST)
- **Re: [STDS-802-11] Liaison statement from 3GPP RAN1 to 802**
  - *From*: Adrian Stephens
  - Date: Wed, 30 Nov 2016 02:07:30 -0500 (EST)
- **[STDS-802-11] Fwd: IMPORTANT - IEEE 802W Jan 2017 Session - ATL - Room RES ASAP!!**
  - *From*: Jon Rosdahl
  - Date: Tue, 29 Nov 2016 18:25:55 -0500 (EST)
- **Re: [STDS-802-11] Liaison statement from 3GPP RAN1 to 802**
  - *From*: Shellhammer, Steve
  - Date: Tue, 29 Nov 2016 11:24:31 -0500 (EST)
- **Re: [STDS-802-11] Liaison statement from 3GPP RAN1 to 802**
  - *From*: Adrian Stephens
  - Date: Tue, 29 Nov 2016 01:49:10 -0500 (EST)
- **Re: [STDS-802-11] Liaison statement from 3GPP RAN1 to 802**
  - *From*: Andrew Myles (amyles)
  - Date: Mon, 28 Nov 2016 19:47:59 -0500 (EST)
- **[STDS-802-11] Please ignore, just a test email**
  - *From*: Zhou Lan
  - Date: Mon, 28 Nov 2016 13:17:29 -0500 (EST)
- **[STDS-802-11] Liaison statement from 3GPP RAN1 to 802**
  - *From*: Adrian Stephens
  - Date: Mon, 28 Nov 2016 11:46:14 -0500 (EST)
- **Re: [STDS-802-11] Q&A on the operation of the 802.11ax dominance remedy**
  - *From*: Adrian Stephens
  - Date: Mon, 28 Nov 2016 11:40:35 -0500 (EST)
- **Re: [STDS-802-11] IEEE 802.11 PDED Ad Hoc status and plans**
  - *From*: Adrian Stephens
  - Date: Mon, 28 Nov 2016 04:40:25 -0500 (EST)

Return to top of Page

Mail converted by MHonArc

APPENDIX CD

Thread Links			Date Links		
Thread Prev	Thread Next	Thread Index	Date Prev	Date Next	Date Index

[STDS-802-11] IEEE 802.11 Mandatory Technical Letter Ballot 225 for P802.11ax Draft 1.0 Starts Today

- *To*: STDS-802-11@xxxxxxxxxxxxxxxxx
- *Subject*: [STDS-802-11] IEEE 802.11 Mandatory Technical Letter Ballot 225 for P802.11ax Draft 1.0 Starts Today
- *From*: Adrian Stephens <adrian.p.stephens@xxxxxxxx>
- *Date*: Thu, 1 Dec 2016 19:16:52 +0000

```
--- This message came from the IEEE 802.11 Working Group Reflector ---

IEEE 802.11(TM) Letter Ballot 225

To: IEEE 802.11 Voters,

With this email, the 802.11 Working Group is officially beginning WG Technical Letter Ballot 225 (LB225), which
is a Letter Ballot on the question "Should P802.11ax D1.0 be forwarded to Sponsor Ballot?".


This Letter Ballot opens Thu Dec 01, 2016 at 23:59 Eastern Time USA (11:59PM) and will close 30 days later on Sat
Dec 31, 2016 at 23:59 Eastern Time USA (11:59pm). All necessary documents are available in the instructions that
can be found on the IEEE 802.11 web site at
http://www.ieee802.org/11/LetterBallots/LB225ax/LB225_instructions.html.

Important:
o This is a 30-day Technical letter ballot and the ballot group (i.e., those that may vote) for this ballot is
all IEEE 802.11 voter members as of the start of this letter ballot. o All current voter members of 802.11 are
required to vote on this ballot series. o If you cast a "Do not approve" vote on this ballot, it must be
accompanied by comments for your vote to be valid. o You must follow these instructions to vote. Do not send an
email to vote. Voting by any method other than the web-based process described here will invalidate your vote. o
Failure to follow these instructions will result in your vote being discarded as an invalid vote. o Not voting on
a letter ballot series or sending an invalid vote can affect your voting privileges. o The draft is password
protected in accordance with IEEE 802 Policies and Procedures. To obtain the draft, use the username and the
password supplied to active members for the 802.11 WG private area.


(The attached file contains a reminder set for 4 days before the close of the ballot. You may find it helpful to
import this into or open this with your calendar client in order to get an automated reminder.)

Thank you for participating in Letter Ballot 225.

Adrian Stephens, IEEE 802.11   Working Group Chair
E-mail: Adrian.P.Stephens@xxxxxxxx

Osama Aboul-Magd, IEEE 802.11 TGax Chair
E-mail: Osama.AboulMagd@xxxxxxxxxx


_____________________________________________________________________________

If you wish to be removed from this reflector, do not send your request to this reflector - it will have no effect.

Instead, go to http://listserv.ieee.org/cgi-bin/wa?SUBED1=STDS-802-11 and then press the LEAVE button.

If there is no LEAVE button here, try http://listserv.ieee.org/cgi-bin/wa?SUBED1=STDS-802-11-RO.

Further information can be found at: http://www.ieee802.org/11/Email_Subscribe.html
_____________________________________________________________________________

BEGIN:VCALENDAR
VERSION:2.0
METHOD:PUBLISH
```

```
BEGIN:VEVENT
DTSTART:20161227T000000Z
DTEND:20161227T235959Z
LOCATION:http://www.ieee802.org/11/LetterBallots/LB225ax/LB225_instructions.html
TRANSP:TRANSPARENT
SEQUENCE:0
UID:225@802.11
DTSTAMP:20161201
SUMMARY;ENCODING=QUOTED-PRINTABLE:Reminder - IEEE 802.11 LB225 for TGax finishes on Sat Dec 31, 2016
CLASS:PUBLIC
BEGIN:VALARM
TRIGGER:-PT0M
ACTION:DISPLAY
DESCRIPTION:Reminder
END:VALARM
END:VEVENT
END:VCALENDAR
```

- **Follow-Ups**:
  - **Re: [STDS-802-11] IEEE 802.11 Mandatory Technical Letter Ballot 225 for P802.11ax Draft 1.0 Starts Today**
    - *From:* Sigurd Schelstraete
  - **Re: [STDS-802-11] IEEE 802.11 Mandatory Technical Letter Ballot 225 for P802.11ax Draft 1.0 Starts Today**
    - *From:* Adrian Stephens

- Prev by Date: **Re: [STDS-802-11] IEEE 802.11 Mandatory Technical Letter Ballot 225 for P802.11ax Draft 1.0 Starts Today**
- Next by Date: **[STDS-802-11] TGax special measures declaration doc**
- Previous by thread: **[STDS-802-11] TGax special measures declaration doc**
- Next by thread: **Re: [STDS-802-11] IEEE 802.11 Mandatory Technical Letter Ballot 225 for P802.11ax Draft 1.0 Starts Today**
- Index(es):
  - **Date**
  - **Thread**

APPENDIX CE

802.11 November 2016 Closing Reports

Date: 2016-11-11

Authors:

Name	Affiliation	Address	Phone	email
Adrian Stephens	Intel Corporation		+44 792 008 4900 (mobile)	adrian.p.stephens@intel.com
Dorothy Stanley	Hewlett Packard Enterprise		+1 630-363-1389	dorothy.stanley@hpe.com

Abstract

- **This document is a digest of the closing reports of all 802.11 sub-groups for presentation at the November 2016 closing plenary meeting. Attendance information and liaison reports (including liaison reports from the mid-week plenary) are also included.**

Attendance

Data as of 2016-11-10 16:00

Group	# Mtgs	Avg	Total	Min	Max
ARC	2	12	24	10	14
Editors Meeting	1	14	14		
TGaj	3	5	17	4	7
TGak	5	6	31	2	8
TGaq	6	10	64	5	17
WNG	1	165	165		
TGax	12	163	1966	4	219
CAC	1	17	17		
Mid-Week Plenary	1	248	248		
New Members	1	14	14		
Opening Plenary	1	227	227		
REG	1	35	35		
TGay	5	52	264	19	74
TGaz	4	37	148	22	59
PAR Review SC	3	7	23	4	13
WUR SG	4	111	445	57	150
AANI SC	3	29	88	20	41
802 JTC1	1	8	8		
PDED Ad-hoc	2	16	32	15	17

Attendance Total

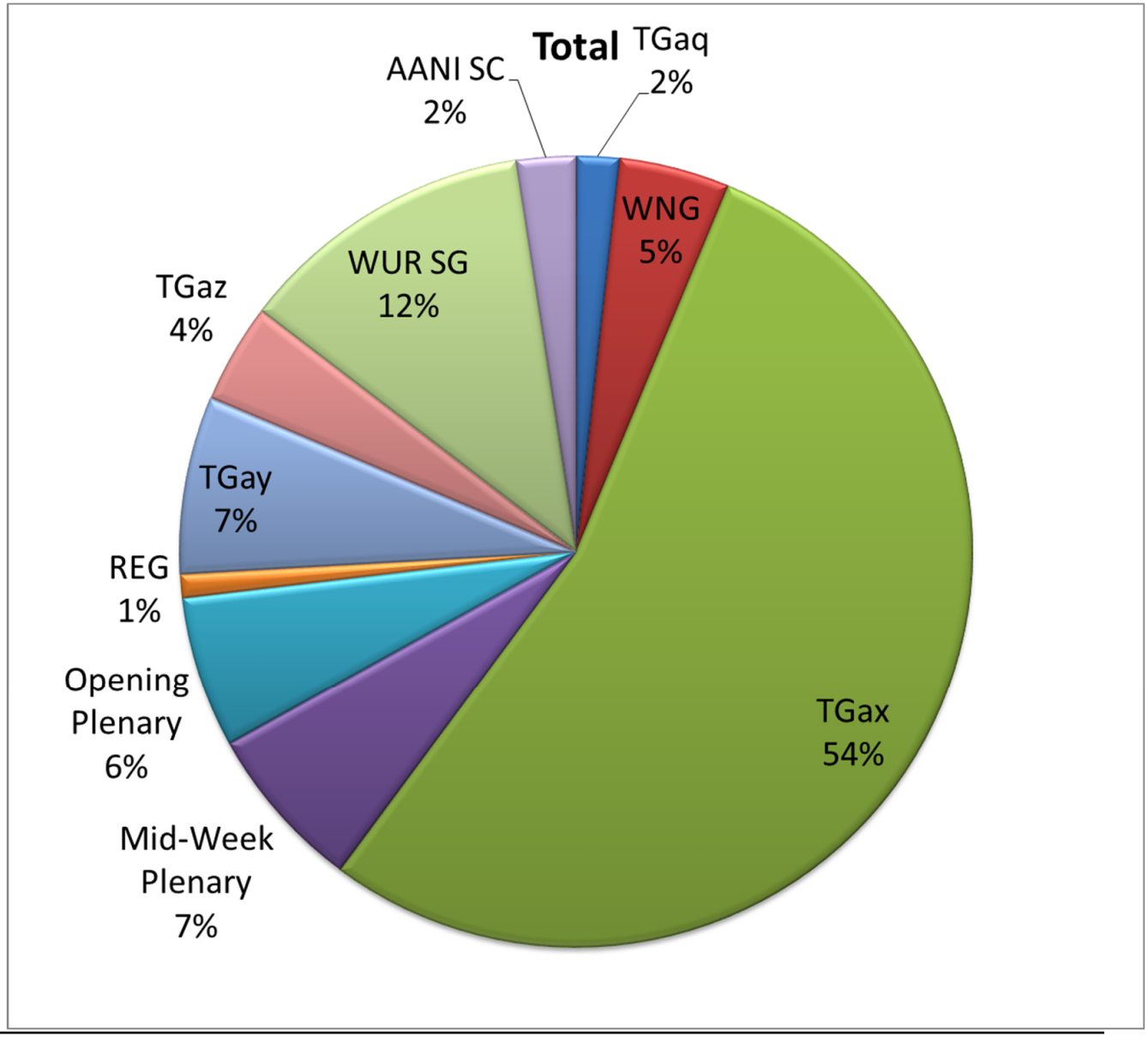

Attendance Histogram

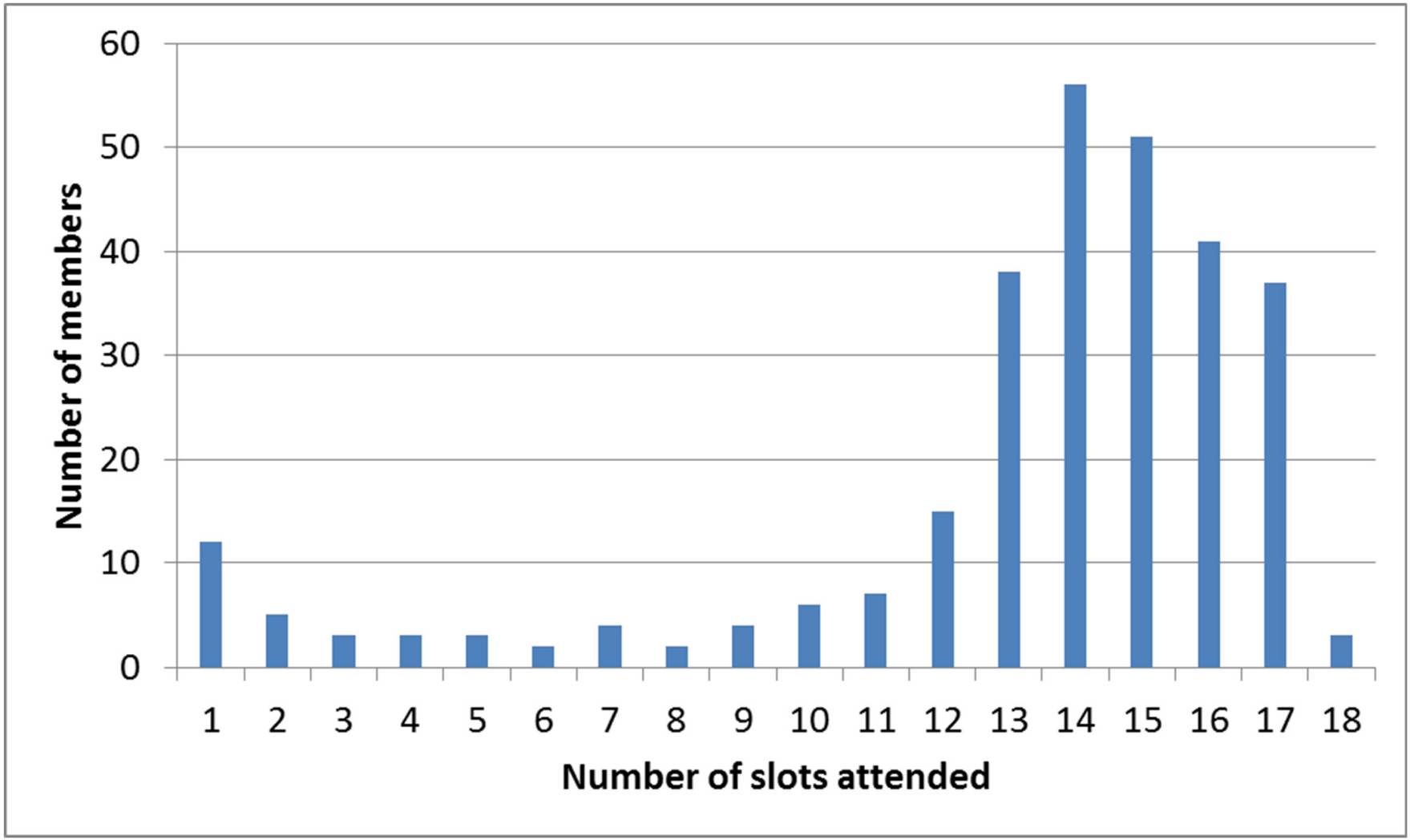

Attendance by Country

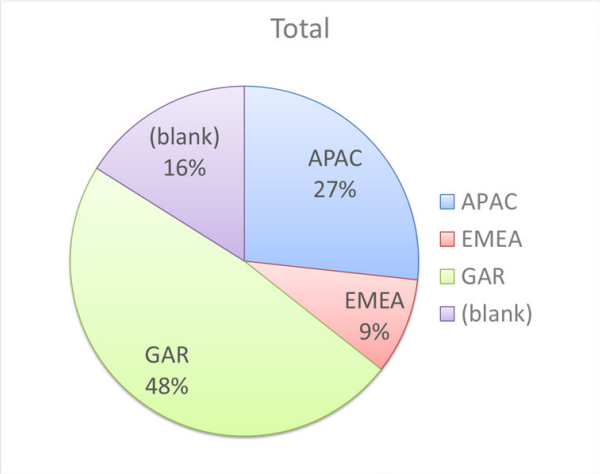

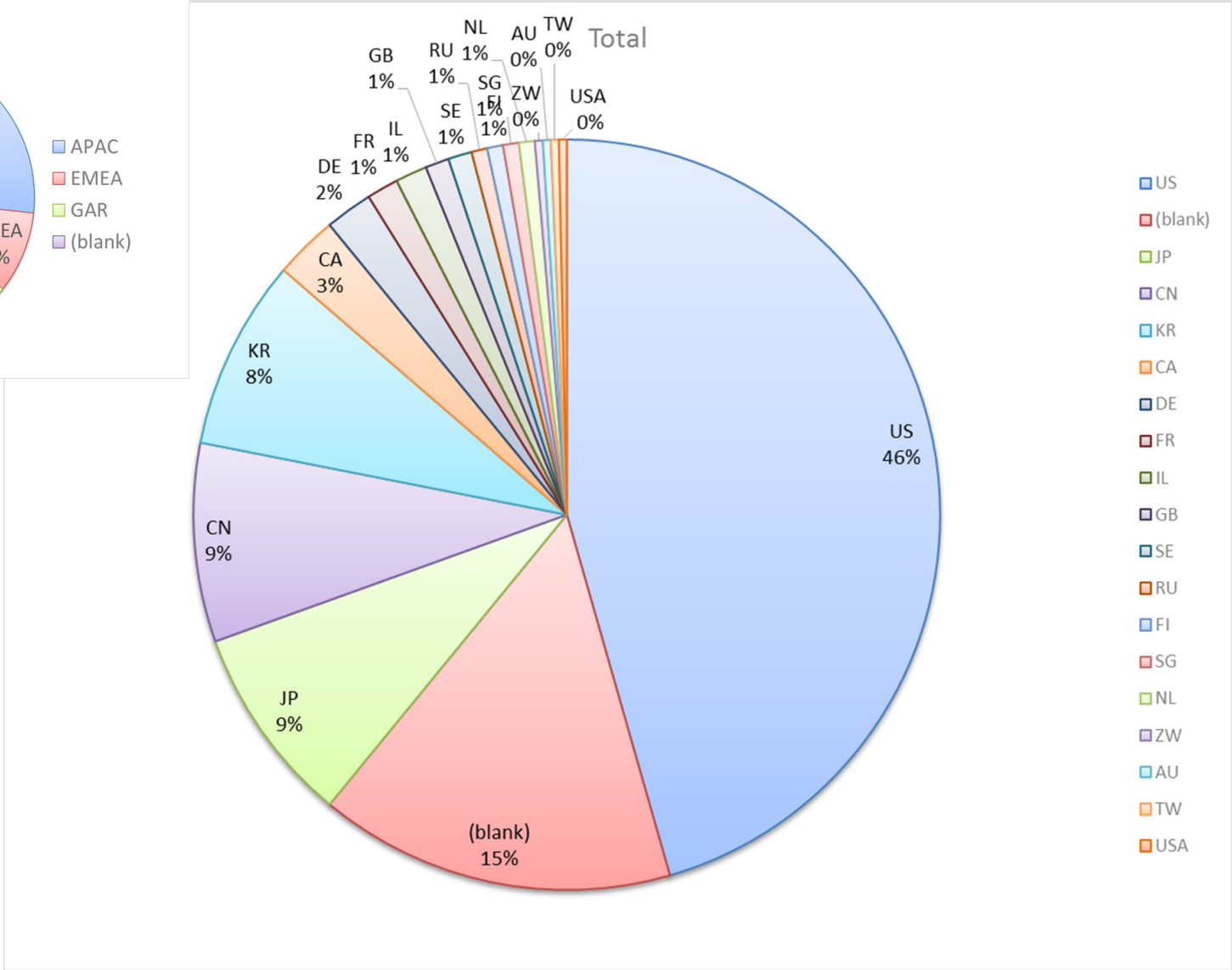

Doc Revision uploads by meeting (month #)

Revs uploaded	Year											
	2015						2016					
Month	1-2	3-4	5-6	7-8	9-10	11-12	1-2	3-4	5-6	7-8	9-10	11-12
802.11 WG	57	61	44	44	33	60	55	54	44	44	76	53
ARC SC	5	10	14	13	12	17	9	12	11	7	4	5
JTC 802 SC			4	7	6	9	7	8	5	12	5	4
JTC AHC	7	11	2									
LRLP TIG				1	12	16	24	18	7	1		
NG60 SG	19	42										
NGP SG	7	18	20	28	7	1						
PAR SC		7		4		5		4		3	1	3
PUB SC	4	1	3	1								
REG SC	32	34	17	7	7	7	7	3	3	5	2	2
TGah	112	90	15	12	15	48	61	59	12	9	14	
TGai	135	134	57	29	28	64	75	21	47	38	43	
TGaj	20	11	32	14	25	23	17	51	24	31	2	21
TGak	26	44	29	37	30	38	39	17	20	35	33	13
TGaq	27	39	58	70	23	35	45	25	23	32	22	11
TGax	110	147	144	171	190	167	109	120	202	286	271	236
TGay		1	31	30	19	23	34	62	41	37	35	53
TGaz					13	12	18	25	13	12	12	15
TGm	86	37	116	90	146	172	109	119	147	95	6	
WNG SC	4	4	8	11	13	10	7	9	11	11	1	7
WUR SG									1	35	24	28
AANI SC											10	6
Total	**651**	**691**	**594**	**569**	**579**	**707**	**616**	**607**	**611**	**693**	**561**	**457**

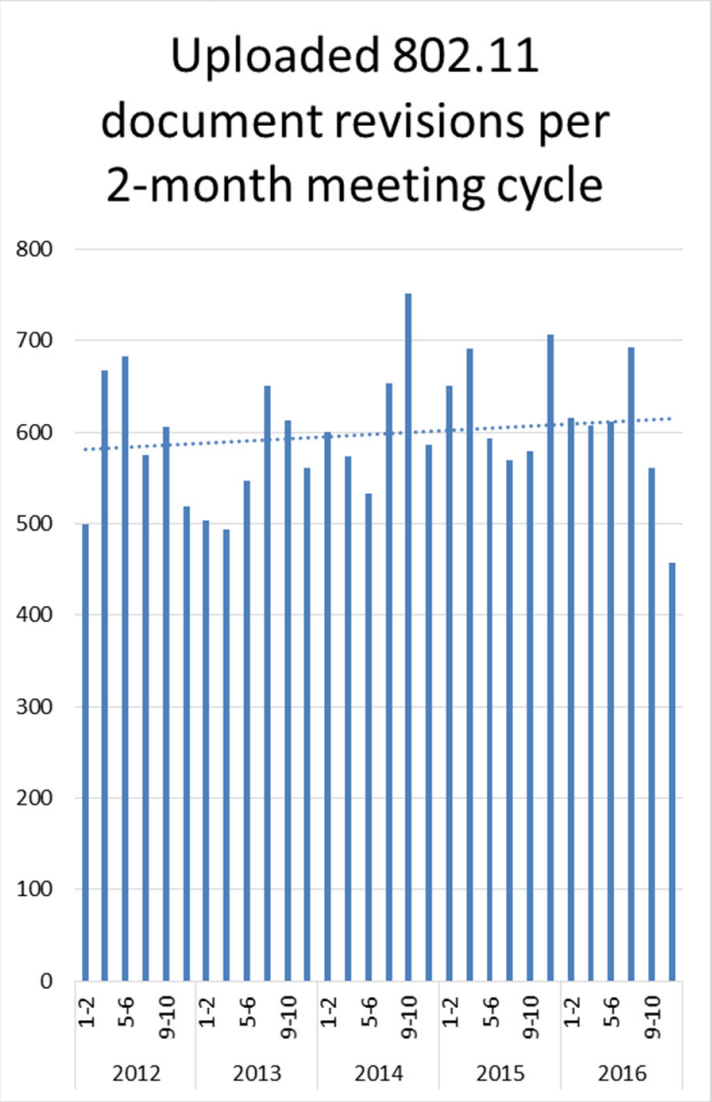

802.11 WG Editor's Meeting (Nov '16)

Date: 2016-11-07

Authors:

Name	Affiliation	Address	Phone	email
Peter Ecclesine	Self		+1-408-527-0815	petere@ieee.org
Robert Stacey	Intel		+1-503-724-0893	robert.stacey@intel.com

Volunteer Editor Contacts

- **TGmc – Adrian Stephens** – adrian.p.stephens@ieee.org **, Edward Au –** edward.ks.au@huawei.com**, Emily Qi –** emily.h.qi@intel.com
- **TGah – Yongho Seok** yongho.seok@gmail.com, **Alfred Asterjadhi –** aasterja@qti.qualcomm.com
- **TGai – Lee Armstrong –** LRA@tiac.net**, Ping FANG** Ping.FANG@huawei.com
- **TGaj – Jiamin CHEN –** jiamin.chen@mail01.huawei.com **, Shiwen He –** shiwenhe@seu.edu.cn
- **TGak – Donald Eastlake –** d3e3e3@gmail.com**, Norm Finn –** ?
- **TGaq – Lee Armstrong –** LRA@tiac.net
- **TGax – Robert Stacey** – robert.stacey@intel.com
- **TGay – Carlos Cordeiro** – carlos.cordeiro@intel.com
- **TGaz – Chao Chun Wang** – chaochun.wang@mediatek.com
- Editors Emeritus:
  - TGaa – Alex Ashley – alex.ashley@hotmail.co.uk
  - TGac – Robert Stacey – robert.stacey@intel.com
  - TGad – Carlos Cordeiro – carlos.cordeiro@intel.com
  - TGae – Henry Ptasinski – henry@LOGOUT.COM
  - TGaf – Peter Ecclesine – petere@ieee.org
  - TGaq – Dan Gal – ddrgal@gmail.com

802.11-2016 and amendment publication

- 802.11-2016 will be published by yearend 2016.
- Our IEEE amendments publication editor is not available in January and February
- 802.11ai may be published in 2016, but it looks like 11ah is too large to publish this year
- For continuity and coherence, it looks like delaying publication of 11ah to March/April is possible
- We will revisit 11ah publication in January

from slide 3/10 of 11-16-1373 by Peter Ecclesine (Self)

Review MDR findings for 802.11aj

- **TGaj MDR report**
  - https://mentor.ieee.org/802.11/dcn/16/11-16-1333-02-0000-tgaj-mdr-report.docx

New amendment style review

- **D0.1 clause 25 is HE MAC behavior modifying clauses 10 and 11; clause 26 is HE PHY behavior.**
- **Comments on the new style are “mixed”. See 16/1472r0 slide 3 hierarchy diagram (next slide in 16/1373).**
- **Some discussion on how amendment becomes core in next revision.**
- **Will have January time to continue discussion**

from slide 5/10 of 11-16-1373 by Peter Ecclesine (Cisco Systems)

The proliferation of STA types and their requirement inheritance

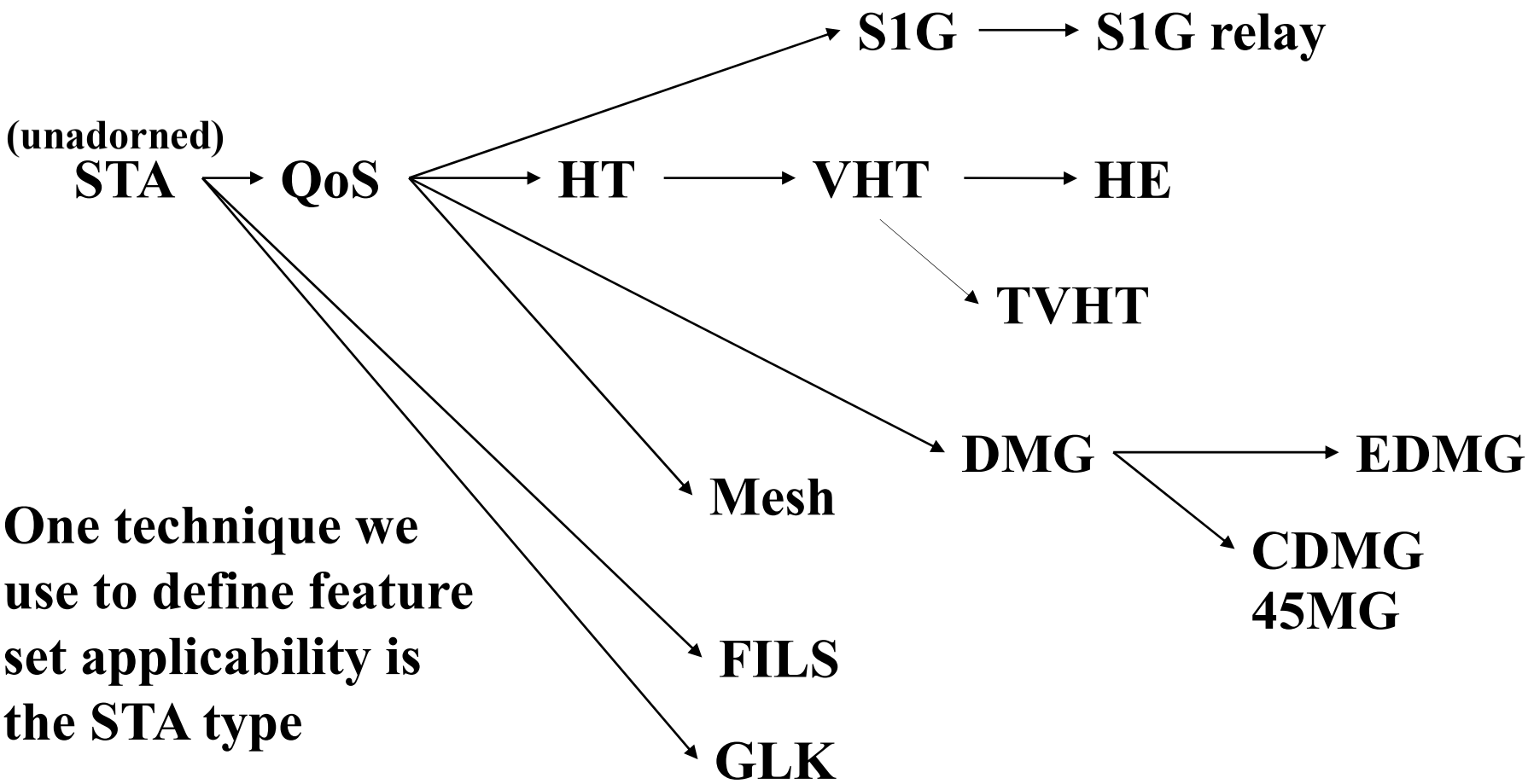

One technique we use to define feature set applicability is the STA type

802.11 Style Guide

- **See 11-09-1034-11-0000-wg11-style-guide.doc**
  - We updated 802.11 WG Style Guide based on 2012 IEEE Standards Style Manual and consistency changes in final publication of the 802.11 standard
- Editor's responsibility includes checking the **2014 IEEE Standards Style Manual** when creating or updating drafts. **https://development.standards.ieee.org/myproject/Public/mytools/draft/styleman.pdf**
- Submissions with draft text should conform to both the WG11 Style Guide and IEEE Standards Style Manual
- Note that the Style Guide evolves with our practice, expect a revision in March

Editor Amendment Ordering

- **Data as of Nov 2016**
- **See http://grouper.ieee.org/groups/802/11/Reports/802.11_Timelines.htm**
- **In July 2016, Editors changed the running order and will revisit in Mar 2017, maintaining this order in the interim**

Amendment Number	Task Group	Projected REVCOM Date
802.11REVmc	TGmc - 3648	Dec 2016
802.11-2016 Amendment 1	TGai - 170	Dec 2016
802.11-2016 Amendment 2	TGah - 627	Dec 2016
802.11-2016 Amendment 3	TGaq - 34	Mar 2017
802.11-2016 Amendment 4	TGaj - 288	Jul 2017
802.11-2016 Amendment 5	TGak - 86	Jan 2018
802.11-2016 Amendment 6	TGax - 317	Dec 2018
802.11-2016 Amendment 7	TGay	Nov 2019
802.11-2016 Amendment 8	TGaz	Mar 2020

Amendment numbering is editorial! No need to make ballot comments on these dynamic numbers!

Nov 2016

Draft Development Snapshot

TG	Published or Draft Baseline Documents										Source	MDR	Style Guide	Editor	Snapshot Date
	Published	mc	ai	ah	aq	ak	aj	ax	ay	az					
mc	Y	8.0									Frame 12.0	Yes	2012	Adrian Stephens Edward Au, Emily Qi	12-Sep
ai	N	8.0	11.0								Frame 12.0	Yes	2012	Lee Armstrong Ping FANG	4-Nov
ah	N	8.0		10.0							Frame 11.0	Yes	2012	Yongho Seok Alfred Asterjadhi	13-Sep
aq	N	8.0			7.0						Frame 12.0	No	2012	Lee Armstrong	4-Nov
ak	N	5.0	6.0	5.0	1.2	2.5					Word	No	2012	Donald Eastlake Norm Finn	10-Nov
aj	N	7.0	6.2	5.0	3.0	1.3	3.0				Frame 10.0	No	2012	Jiamin Chen Shiwen He	7-Nov
ax	N	8.0	10.0	9.0	3.0	2.0	1.0	0.5			Frame 12.0	No	2012	Robert Stacey	4-Nov
ay												No	2012	Carlos Cordeiro	3-Nov
az														Chao Chun Wang	12-Sep

Changes from last report shown in red.

Most current doc shaded green.

MIB style, Visio and Frame practices

- **I'm going to suggest going forward we use a single style with appropriately set tabs, and use leading Tabs to distinguish the syntax and description parts. (Adrian Stephens Feb 9, 2010)**
- **Two ways to format a figure & its caption in frame:**
  - Insert a table. Insert anchored frame inside table cell to hold graphics. Use table caption as figure caption.
  - Insert an anchored frame. Insert caption inside a text frame inside the anchored frame. Insert graphics inside the anchored frame.
- **Keep embedded figures using visio as long as possible**
  - Near the end of sponsor ballot, turn these all into .wmf (windows meta file) format files (you can do this from visio using "save as"). Keep separate files for the .vsd source and the .wmf file that is linked to from frame. There is likelihood we should use .emf
- **Frame templates for 11aa, 11ac, 11af**

AANI SC Closing Report November

Date: 2016-11-11

Authors:

Name	Affiliations	Address	Phone	email
Joseph Levy	InterDigital Communications, Inc.	2 Huntington Quadrangle 4th floor, South Wing Melville, NY 11747	+1.631.622.4139	jslevy@ieee.org

from slide 1/4 of 11-16-1542 by Joseph Levy (Interdigital)

Abstract

This Document is the closing report for AANI SC, November 2016 Meeting in San Antonio, TX

802.11 AANI SC – November 2016

- **Meeting Goals:**
  - **Discuss 802.11 activity in IC for "IEEE "5G" Specification"**
  - **Continue to define/promote engagement with 3GPP RAN and SA**
  - **Send reply liaison to RAN2 on "Throughput" (11-16/1384r0)**
- **Meeting Activity:**
- **Reported on 3GPP replies to 802.11 LS (11-16/1101r10)**
- **Straw Polled interest in new LS to 3GPP RAN and SA**
  - **Polls indicated some support: 8/0/19 and 7/0/14, respectively**
- **Discussed Industrial projects - informative - no conclusions**
- **Reply liaison to RAN2 draft created – still being discussed, not agreed, plan competition @ January meeting.**

from slide 3/4 of 11-16-1542 by Joseph Levy (Interdigital)

802.11 AANI SC – Plans

- **Teleconferences all at @ 10:00 ET**
  - **Thursday 1 December**
  - **Thursday 15 December**
  - **Thursday 5 January**
- **Meeting plans for January;**
  - **Two meeting slots planned**
  - **Complete liaison to RAN2 on "Throughput" (11-16/1384r0), current draft in 11-16/1510r1**
  - **Create draft liaisons to 3GPP RAN and SA to define/promote engagement**
  - **Continue to report on 802.1CF OmniRAN – Industrial Connections activity**

from slide 4/4 of 11-16-1542 by Joseph Levy (Interdigital)

ARC Closing Report

Date: 2016-11-10

Authors:

Name	Affiliations	Address	Phone	email
Mark Hamilton	Ruckus/Brocade	350 W. Java Dr. Sunnyvale, CA 94089	+1-303-818-8472	mark.hamilton2152@gmail.com

Abstract

This document is the closing report for ARC SC, November 2016 Meeting in San Antonio, Texas, USA

Work Completed

- **Agenda is here: https://mentor.ieee.org/802.11/dcn/16/11-16-1323-02-0arc-arc-sc-agenda-november-2016.pptx**

- **Noted status of IEEE 1588 mapping to IEEE 802.11**
  - No changes. No action needed.
- **Noted IEEE 802 activities relevant to 802.11/ARC**
  - 802.1Qbz-2016 has been published
  - 802.1AC going to RevCom
  - 802.1Q revision under consideration. Roll-in.
- **Status of joint topics with TGak (General Links – joint mtg)**
  - 11-16-1512-00-0arc-glk-802-1q-bridge.pptx
- **Status of joint topics with TGaq (Pre-association Discovery)**
  - Nothing significant at this time.

from slide 3/6 of 11-16-1541 by Mark Hamilton, Ruckus/Brocade

Work Completed (cont)

- **MIB Design Pattern work item**
  - Discussed https://mentor.ieee.org/802.11/dcn/15/11-15-0355-04-0arc-mib-truthvalue-usage-patterns.docx.
  - Have reviewed and discussed all known open issues, with consensus direction given.
  - Chair will update, per direction, for (hopefully final) review and approval in January.

- **YANG/NETCONF**
  - Very general introduction only, so far.
  - **Anybody with experience on these, please come help us out!**

Teleconference(s)

- **Planning December 12 (Monday), 11am ET, 1 hour**
- **To discuss YANG/NETCONF**
- **May cancel if insufficient materials ready**

January 2017 Plans

- **Two standalone meeting slots planned:**
  - Finish Design Pattern for MIB attribute use
  - Consider use of YANG/NETCONF by 802.11
  - DS/AP/Portal architecture discussions, and "what is an ESS?"
  - Status of IETF work, IEEE 1588 work
- **One joint session with TGak**
- **Same or another slot joint with 802.1**
  - Discussion about YANG/NETCONF models, and what 802.1 is doing and has learned

from slide 6/6 of 11-16-1541 by Mark Hamilton, Ruckus/Brocade

PAR Review - Meeting Agenda and Comment slides - San Antonio 2016

- **Date:** 2016-11-10

Authors:

Name	Affiliations	Address	Phone	email
Jon Rosdahl	Qualcomm Technologies Inc.	10871 N 5750 W Highland, UT 84003	+1-801-492-4023	jrosdahl@ieee.org

from slide 1/42 of 11-16-1326 by Jon Rosdahl, (Qualcomm)

Report to 802.11

- **IEEE 802.11 PAR Review SC report to 802.11 WG.**
- **The Standing Committee reviewed 6 PARs.**
- **Feedback for 802.1CS (slide 8), 802.3cg (slide 9), 802.19.2 (slides 10-12) and 802.11 WUR (slides 13-14) was provided by the Tuesday 6:30pm deadline.**
- **Responses were received from 802.19.2 (slides 17-21), 802.11 WUR (slides 23-27), 802.3cg (slides 29-31); 802.1CS (slides 32-38).**

- **We had no comments for 802C or 802.1AR.**

IEEE 802.11/15 Regulatory SC
San Antonio Closing Report

Date: 2016-11-11

Authors:

Name	Affiliations	Address	Phone	email
Rich Kennedy	HP Enterprise	7305 Napier Trail Austin, TX 78729	+1-737-202-7014	rich.kennedy@hpe.com

Abstract

This presentation is the closing report for the November 2016 IEEE 802.11/15 Regulatory Standing Committee meeting in San Antonio.

Agenda

- **Administrative items**
- **Introduction**
- **Approve Warsaw minutes**
- **Discussion items**
  - Regulatory work in progress
  - Status of completed work
- **Actions required**
  - TBD
  - …
- **AOB and Adjourn**

from slide 3/7 of 11-16-1538 by Rich Kennedy, Hewlett Packard Enterprise

Regulatory Updates

- **ETSI BRAN and ERM TG11 updates**
- **FCC WRC-19 Advisory Committee (WAC)**
- **CEPT CPG PT-D**
- **EU Radio Equipment Directive implications**
- **FCC 16-149 2016 Biennial Review**
- **ETSI RED workshop December 1st**
  - http://www.etsi.org/news-events/events/1102-53-shades-of-re-d-six-months-to-go

Input for 802.18

- **Consider responding to the FCC 16-149 2016 Biennial Review Public Notice**

from slide 5/7 of 11-16-1538 by Rich Kennedy, Hewlett Packard Enterprise

Teleconferences, etc.

- **No more Regulatory SC teleconferences**
- **This is the final meeting of the Regulatory SC**

from slide 6/7 of 11-16-1538 by Rich Kennedy, Hewlett Packard Enterprise

The End

- **To all of you who have contributed to the success of the Regulatory Standing Committee, Thank you!**

from slide 7/7 of 11-16-1538 by Rich Kennedy, Hewlett Packard Enterprise

Closing Report

Date: 2016-11-11

Authors:

Name	Company	Address	Phone	email
Jim Lansford	Qualcomm	7775 N Topeka Ave, Cascade, CO 80809	+1-719-286-8660	jim.lansford@ieee.org
Lei Wang	Huawei Technologies Co.,Ltd.	10180 Telesis Ct #220, San Diego, CA 92121	+1-858-205-7286	Leiwang95@huawei.com

Abstract

Closing report for WNG SC for November 2016 in San Antonio, Texas (USA)

Final Agenda

https://mentor.ieee.org/802.11/dcn/16/11-16-1322-02-0wng-agenda-for-wng-2016-11.ppt

Presentations at November 2016 meeting

- "Privacy Issues in 802.11 Networks", Mathieu Cunche (U Lyon/Inria), J C Zuniga (Sigfox), Mathy Vanhoef (KU Leuven), Celestin Matte (U Lyon/Inria)
  - https://mentor.ieee.org/802.11/dcn/16/11-16-1492-00-0wng-privacy-issues-in-802-11-networks.pptx
- Straw poll:
  - Do you think 802.11 specifications should include privacy recommendations about the usage of its protocols and parameters?
  - Straw poll Result: yes 30/ no 12/ abstain 57
- "LiFi – Light communication for 802.11", Nikola Serafimovsky, (PureLiFi)
  - https://mentor.ieee.org/802.11/dcn/16/11-16-1499-01-0wng-lifi-light-communication-for-802-11.pptx
- Straw Polls:
  - Form a Study Group? yes 20 / no 44/ ab 33
  - Form a TIG? 76/ no 4/ ab 24

- **Minutes**
  - https://mentor.ieee.org/802.11/dcn/16/11-16-1515-00-0wng-wng-meeting-minutes-of-2016-november-san-antonio.docx
- **Plans for January 2016**
  - TBD
- **No motions, no conference calls**

PDED Ad Hoc closing report in San Antonio in November 2016

•11 Nov 2016

Authors:

Name	Company	Phone	email
Andrew Myles	Cisco	+61 2 84461010 +61 418 656587	amyles@cisco.com

The IEEE 802.11 PDED ad hoc achieved its goals this week in San Antonio

- **IEEE 802.11 PDED achievements in San Antonio in Nov 2016**
  - Approved liaison to 3GPP RAN1 in response to their request for future 802.11 PHYs to adopt ED = -72dBm
    - See 11-16-1493-04; Note: this LS will now be approved by 802 EC
  - Agreed to continue IEEE 802.11 PDED ad hoc in short term to:
    - Address any reply from 3GPP RAN1
    - Develop further data (based on simulation and testing?) for future LS's
    - Address the question of ED threshold in EN 301 893 that applies to 802.11ax
  - Agreed to respond to LS (16-11-1343) from 3GPP RAN1 by asking the 802.11 WG Chair to respond informally to 3GPP RAN1 Chair, noting:
    - The LS was received, The issues are important and so timely resolution is also important
    - The WG looks forward to 3GPP RAN1's response

from slide 2/3 of 11-16-1549 by Andrew Myles, Cisco

The IEEE 802.11 PDED ad hoc will continue its work until at least the Atlanta meeting in Jan 2017

- **IEEE 802.11 PDED plans in Atlanta in Jan 2017**
  - Use e-mail reflector for discussions and to encourage work
    - It is hoped that members will contribute more simulations
  - Hold one or more teleconferences as required
    - Will be called with 10 days notice
    - Christmas might limit opportunities
  - Hold two sessions in Atlanta

from slide 3/3 of 11-16-1549 by Andrew Myles, Cisco

IEEE 802 JTC1 Standing Committee Nov 2016 closing report

•11 November 2016

Authors:

Name	Company	Phone	email
Andrew Myles (Chair)	Cisco	+61 2 84461010 +61 418 656587	amyles@cisco.com
Peter Yee (Vice Chair)	AKAYLA	+1 415 215 7733	peter@akayla.com

The IEEE 802 JTC1 SC mainly focused on executing the PSDO process in San Antonio in Nov 2016

- **IEEE 802 JTC1 achievements in San Antonio in Nov 2016**
  - Processed PSDO submissions
    - Noted status of 39 standards in the PSDO pipeline
    - Resolved IEEE 802.1Qcd 60 day ballot comments
    - Resolved IEEE 802.3bw 60 day ballot comments
    - Resolved IEEE 802.15.3 60 day ballot comments
  - Considered ways of encouraging the China NB to provide more detail on their concerns related to 802.1X security
  - Considered ways of encouraging NBs to vote yes or no rather tan abstain
  - Agreed to start sending corrigenda into special PSDO process
  - Issued call to WG Chairs for status updates in Jan 2017

from slide 2/3 of 11-16-1551 by Andrew Myles, Cisco

The IEEE 802 JTC1 SC mainly focused on executing the PSDO process in San Antonio in Nov 2016

- **IEEE 802 JTC1 plans for in Atlanta in Jan 2017**
  - Execute PSDO process
  - Issue invitation to China NB to provide more detail on their concerns related to 802.1X security
  - Reach out to NBs to understand why an increasing number are abstaining
  - Prepare for SC6 meeting in Feb 2017
    - Review WG status updates

from slide 3/3 of 11-16-1551 by Andrew Myles, Cisco

IEEE 802.11aj November 2016 Closing Report

Date: 2016-11-10

Author:

Name	Company	Address	Phone	email
Jiamin CHEN	Huawei/HiSilicon			Jiamin.chen@mail01.huawei.com

Abstract

This document is the TGaj closing report for the November 2016 session.

Work Completed (1/2)

- **Approved July meeting minutes (11-16/1061r0)**
- **The following comment resolution proposals have been presented**
  - 11-16/1145r1 - Proposed resolution to CID 506, 508, 509, 510, 511, 512, 513 and 514 in LB223
  - 11-16/1467r3 - Proposed resolutions for CID 502,503,504,520 11aj LB223
  - 11-16/1479r0 – Proposed resolution to CID 505 in LB223
  - 11-16/1491r0 – Proposed resolution to CID 507 in LB223
  - 11-16/1463r0 – Proposed resolutions to CID 521 in LB223
  - 11-16/1462r1 – Proposed resolutions to CID 516-519 in LB223
  - 11-16/1527r2 – Proposed resolutions to CID 501, 515
- **Completed all comment resolution of the LB223 for D3.0**
- **Approved those comment resolutions and instruct editor to incorporate them into D4.0.**

Work Completed (2/2)

- **Approved resolutions for TGaj MDR report.**
  - 11-16/1333r4 – TGaj MDR report
- **Approved a 15 day Working Group Technical Recirculation Letter Ballot asking the question "Should P802.11aj D4.0 be forwarded to Sponsor Ballot?"**
- **Updated Task Group timeline**

from slide 4/7 of 11-16-1536 by Jiamin Chen (Huawei)

Plan for November meeting

- **Comment resolution for 802.11aj WG Recirculation Letter Ballot**
- **Discussion on conditional Sponsor Ballot**

Conference Call Time

- **15th December, 2016, 8pm ET for 1hour**
  (16th December, 2016, 9am Beijing Time)
- **5th January, 2017, 8 pm ET for 1 hour**
  (6th January, 2017, 9am Beijing Time)

Thank you !

TGak November Closing Report

- **Date:** 2016-11-10

Authors:

Name	Affiliations	Address	Phone	email
Donald E. Eastlake, III	Huawei Technologies	155 Beaver Street, Milford, MA 01757 USA	+1-508-333-2270	d3e3e3@gmail.com

Abstract

Closing Report of the 802.11 TGak meeting November 2016 in San Antonio, Texas.

TGak Closing Report

- **Accomplishments**
  - TGak entered the week with only12 of the 346 comments from recirculation LB218 unresolved. During the week, it resolved all of these 12 comments and will ask the WG to approve a re-circulation.
  - Met jointly with 802.11 ARC SC Thursday AM1.
  - An annotated agenda is in 11-16/1304.
  - The minutes will be in 11-16/1489.

TGak Closing Report

- **Submissions**
  - 11-16/1512, “GLK 802.1Q Bridge”, Mark Hamilton
  - 11-16/1533, “LB218 Hamilton proposed comment resolutions”, Mark Hamilton
  - 11-16/1507, “Yet More 11ak LB218 CIDs Assigned Donald Eastlake”, Donald Eastlake
  - 11-15/556, Comment Reslutions, Donald Eastlake

TGak Closing Report

- **Teleconferences**
  - Decided to hold 1 ½ hour (except 1 hour on the 12th) teleconferences, to be joint with 802.1Qbz if mutually convenient, through the January 2017 802.11 meeting on Monday 21st and 28th November and 12th and 19th December at 10am Eastern US Time.
- **January 2017 Plans**
  - Work on comments on re-ciruclation LB on 11ak D3.0.
  - Joint meeting with 802.11 ARC SC.

TGaq Closing Report

Date: 2016-11-10

Authors:

Name	Company	Address	Phone	email
Stephen McCann	BlackBerry Ltd	200 Bath Road, Slough, Berkshire, SL1 3XE, UK	+44 1753 667099	smccann@blackberry.com

Abstract

Closing report for TGaq (Pre-Association Discovery) for November 2016, San Antonio, Texas, USA.

- **Sponsor Ballot status**
  - Initial sponsor ballot finished on 4th November
  - 235 comments, 87% approval
  - 90 technical comments unresolved.

- **Teleconferences**
  - Throughout December and January.

- **Plans for January 2017 2016**
  - Further sponsor ballot comment resolution
  - Possible joint meeting with ARC

TGax November 2016 Closing Report

Date: 2016-11-11

Authors:

Name	Affiliations	Address	Phone	email
Osama Aboul-Magd	Huawei Technologies	303 Terry Fox Drive, Kanata, ONT, K2K-3J1	613-287-1405	Osama.aboulmagd@huawei.com

Abstract

This document is the closing report for the TGax for the November 2016 session.

Work Completed

- **The TG completed the discussion of all the submissions received.**
- **Completed resolution of most of the comments received on draft D0.1**
- **Passed a motion to prepare draft D1.0 and start 30-day WG LB**
- **Agenda and motions are available at: https://mentor.ieee.org/802.11/dcn/16/11-16-1310-05-00ax-tgax-november-2016-meeting-agenda.ppt**

from slide 3/5 of 11-16-1546 by Osama Aboul-Magd (Huawei Technologies)

January 2017 Goals

- **Start resolution of comments on draft D1.0**

from slide 4/5 of 11-16-1546 by Osama Aboul-Magd (Huawei Technologies)

Conference Call Times

- **Dec. 1, 8, and 15 21:00 ET 2hrs**
- **January 5, 2017 11:00 ET 2hrs**
- **January 12, 2017 20:00 ET 2hrs**

from slide 5/5 of 11-16-1546 by Osama Aboul-Magd (Huawei Technologies)

Task Group AY
November 2016 Closing Report

Date: 2016-11-10

Authors:

Name	Company	Address	Phone	Email
Edward Au	Huawei Technologies			edward.ks.au@huawei.com

Abstract

This document is the closing report for Task Group AY for the November 2016 session.

Work Completed

- **27 submissions were covered during the meeting covering areas related to:**
  - **Channel model**
  - **Specification framework document**
- **Significant progress is made in the development of specification framework document**
- **Revised timeline is approved**
  - **Delay D0.1 and D1.0 by 2 months**
  - **Keep D2.0 and amendment completion the same**

from slide 3/5 of 11-16-1505 by Edward Au (Huawei Technologies)

Goals for January 2017 interim

- **Advance on Specification Framework document**
- **Technical presentation**
- **Preparation on Draft 0.1**

from slide 4/5 of 11-16-1505 by Edward Au (Huawei Technologies)

Teleconference Schedule

- **January 4 (Wednesday), 10:00am ET – 11:00am ET**

TGaz Next Generation Positioning
Nov. Closing Report

- **Date:** 2016-11-10

Authors:

Name	Affiliations	Address	Phone	email
Jonathan Segev	Intel Corporation		+972-54-2403587	jonathan.segev@intel.com

Abstract

This document is the TGaz Next Generation Positioning closing report for the San Antonio meeting, Nov. 2016.

Work Completed This Week

- Reviewed and approved 3GPP Liaison letter on WLAN RTT accuracy.
- Reviewed and adopted text to Spec. Framework on protocol elementary stages: discovery, negotiation and measurement exchange.
- Reviewed technical submissions on measurement exchange, negotiation and secured location.
- Set telecon times and goals for Nov. meeting.

- Agenda: See 11-16/1309r5.

from slide 3/5 of 11-16-1548 by Jonathan Segev, Intel Corporation

Goals For The January Meeting

- Continue development of FRD and SFD development.
- Review technical submissions on measurement phase approaches, negotiation phase, adaptation to 11ax MU mode and secured location schemes.

from slide 4/5 of 11-16-1548 by Jonathan Segev, Intel Corporation

Teleconference Schedule

- **Nov. 30th 10:00AM ET for 1hr.**

Wake-up Radio (WUR) SG November 2016 Closing Report

Date: 2016-11-10

Authors:

Name	Affiliations	Address	Phone	email
Minyoung Park	Intel Corporation			minyoung.park@intel.com

from slide 1/10 of 11-16-1543 by Minyoung Park (Intel Corp.)

Abstract

- **This document is the Wake-up Radio Study Group closing report for the San Antonio meeting, November 2016**

Work Completed

- **Reviewed the comments on the PAR and CSD from 802.11 PAR SC, other WGs, and EC**
- **Resolved all the comments and revised the PAR and CSD**
  - Revised PAR: 802.11-16/1045r9
  - Revised CSD: 802.11-16/936r4
- **The revised PAR and CSD have been approved by the SG and 802.11 WG (see Slide 4 and Slide 5)**
- **Approved the comment responses (802.11-16/1528r0, see Slide 6)**
- **Approved SG extension (see Slide 7)**
- **Reviewed the presentations (see Slide 8)**
- **Reviewed the SG timeline**
- **Set goals for the January 2017 meeting and teleconference schedule**
- **Agenda: see doc.: IEEE 802.11-16/1324r7**

Motion – WUR Updated PAR

- Believing that the PAR contained in the document referenced below meets IEEE-SA guidelines,
- Request that the PAR contained in [doc:802.11-16/1045r9] be approved and submit to IEEE 802 EC for approval to submit to NesCom.

- **Moved: Minyoung Park**
- **Seconded: VK Jones**
- **Result: 119-0-14 Passes**

- **WUR SG result: Moved:, Shahrnaz Azizi, Seconded:Leif Wilhelmsson, Result: Y: 34, N: 0, A: 1**

from slide 4/10 of 11-16-1543 by Minyoung Park (Intel Corp.)

Motion – WUR CSD

- Believing that the CSD contained in the document referenced below meets IEEE 802 guidelines,
- Request that the CSD contained in [doc:802.11-16/936r4] be approved and submitted to IEEE 802 EC for approval.

- **Moved: Yunsong Yang**
- **Seconded: Guido Hiertz**
- **Result: 115-0-11 Passes**
- **WUR SG result: Moved:, Yongho Seok, Seconded:, Bin Tian, Result: Y: 28, N:0, A:0**

Motion – WUR PAR comment responses

- Approve the comment responses as indicated in https://mentor.ieee.org/802.11/dcn/16/11-16-1528-00-0wur-comments-on-wur-sg-par-and-csd.ppt

- **Moved: Minyoung Park**
- **Seconded: Shahrnaz Azizi**
- **Result: 103-0-10 Passes**

from slide 6/10 of 11-16-1543 by Minyoung Park (Intel Corp.)

Motion: Study Group Extension

- **Request the IEEE 802 LMSC to extend the IEEE 802.11 Wake-up Radio Study Group (WUR SG)**

[Moved by <name> on behalf of <group>]

WUR Study Group vote:

- **Move: Steve Shellhammer**
- **Second: Young Hoon Kwon**
- **Results: Y 45/N 0/A 3 Passes**

from slide 7/10 of 11-16-1543 by Minyoung Park (Intel Corp.)

Call for Submissions

1) 11-16/1379, “On error rate performance of OOK in AWGN” Simon Qu (Blackberry), 20min
2) 11-16/1400r0, “Power Efficient WUR AP Discovery” Xiaofei Wang (InterDigital)
3) 11-16/1445 “Overall MAC Procedure for WUR” Kiseon Ryu (LG Electronics)
4) 11-16/1501, “AP Discovery using WUR,” Igor Kim (ETRI)
5) 11-16/1504, “Discussion of WUR Packets Design,” Ke Yao (ZTE)
6) 11-16/1506r0, “Coexistence Mechanism for Wakeup Radio Signal Follow-up,” Yongho Seok (NEWRACOM)
7) 11-16/1465, “WUR usage model,” Ross (Huawei)
8) 11-16/1470, “Wake-up and Data Exchange Sequences,” John Son (WILUS)
9) 11-16/1460, “WUR MAC discussion,” Liwen Chu (Marvell)
10) 11-16/1326r1, “Feedback from the 802.11 PAR Review SC,” Jon Rosdahl

Goal for January 2017
(subject to EC/NesCom approval of the PAR)

- **Decide Task Group leadership structure**
- **Decide TG specification development process**
- **Review TG timeline**
- **Review technical presentations**

from slide 9/10 of 11-16-1543 by Minyoung Park (Intel Corp.)

Teleconference Call Schedule

- **December 12th Monday 18:00 ET (1 hour)**

Report on 802.15

Date: 2016-11-11

Authors:

Name	Affiliations	Address	Phone	email
Clint Chaplin	Imagicon	4750 Almaden Expy., #124-310, San Jose, Ca 95118	+1-408-239-3348	firstname dot lastname at gmail dot com

Abstract

Report on 802.15 as presented to 802.11

802.15.3d
100 Gb/s

- **Worked on finishing up a pre-ballot version of the draft**
- **Will start work in January on a PAR for 802.1AC amendment**

802.15.3e
High Rate Close Proximity (HRCP)

- Initial sponsor ballot of draft 4.0 closed on August 28. Results: 75 yes, 4 no, 0 abstain; passes! 256 comments received
- First recirculation sponsor ballot closed October 16. Results: 76 yes, 4 no, 1 abstain. 88 comments received.
- Second recirculation sponsor ballot closed November 6. Results: 86 yes, 0 no, 1 abstain. 26 comments received.
- Planning on a third recirculation after this meeting. BRC formed.
- Asking EC for conditional approval to publish.

from slide 4/19 of 11-16-1553 by Clint Chaplin, Imagicon

802.15.4s
Spectrum Resources Usage

- **Initial WG ballot closed September 8. Results: 52 yes, 6 no, 5 abstain; passes! 202 comments received.**
- **Still addressing comments**
- **Formed BRC to finish comments and to handle recirculations and comment resolutions.**

802.15.4t
Higher Rate

- First sponsor ballot closed October 8. Results: 52 yes, 1 no, 0 abstain; passes! 25 comments received.
- Second sponsor ballot closed November 7. Results: 53 yes, 1 no, 0 abstain. 5 comments received.
- All comments addressed.
- Will start sponsor ballot recirculation after meeting.
- Asking EC for conditional approval to publish

from slide 6/19 of 11-16-1553 by Clint Chaplin, Imagicon

802.15.4u
Support for India Bands

- **Second sponsor ballot closed August 12. Results: 66 yes, 0 no, 1 abstain. No comments received.**
- **Conditions for conditional approval met; draft forwarded to RevCom**

802.15.4v
Regional SUB 1GHz Bands

- **Second WG recirculation closed November 7. Results: 58 yes, 1 no, 5 abstain. 11 comments received.**
- **Going out for recirculation after this meeting.**
- **Asking EC for conditional approval to go out for sponsor ballot.**

802.15.7r1 Optical Camera Communication

- **Finished Draft D1.**
- **Initiated internal commenting period on D1**

802.15.8 Peer Aware Communications

- **Finished resolving comments on the initial WG ballot.**
- **Going out for recirculation after this meeting.**
- **Forming a BRC to handle comments**

802.15.10 Layer 2/Mesh Under Routing (L2R)

- **Initial Recirculation Sponsor Ballot closed September 10, 2016. Results: 76 yes, 3 no, 6 abstain. 39 comments, 2 MBS.**
- **Second Recirculation Sponsor Ballot closed October 3, 2016. Results: 81 yes, 1 no, 6 abstain. 8 comments, 1 MBS.**
- **Third Recirculation Sponsor Ballot closed October 22, 2016. Results: 83 yes, 0 no, 6 abstain. 2 comments.**
- **Fourth Recirculation Sponsor Ballot closed November 6, 2016. Results: 86 yes, 0 no, 7 abstain. 0 comments.**
- **Asking the EC for unconditional approval to publish.**

802.15.12
ULI (Upper Layer Interface)

- Discussion on the concepts necessary for 802.15.12
  - Ranging Protocol Module
    - Work in progress, concept has been defined
  - L2R
    - Reviewed Warsaw's presentation, some changes resulting from draft update have been added
  - Management Protocol Module
    - PHY configuration table will use the capability IE as starting point
- Discussion on the architecture for 802.15.12
  - IE devices will use a payload IE designated for ULI; devices not responding are either non-ULI or non-IE capable(multiple discovery packets should be sent since a packet may not be received)
  - Non-IE device discovery will use a "well known" key to secure a discovery ULI packet, devices not responding to this discovery packet could be assumed to be non-ULI (multiple discovery packets should be sent since a packet may not be received)
  - Non-IE devices will use 0xff as 1st payload octet in accordance with 6LoWPAN Paging Dispatch, the 2nd octet denotes page 15 and will be defined in the future

Dependable IG

- ✓ **Review of Responses to Call for Interest(CFI)**
  1. Review of Call for Interest(CFI): doc.#15-14-0449-06-0dep
  2. Review of Summary of Responses for CFI: doc.#15-15-0217-06-0dep
  3. Review of Scope and Focused Applications with Different QoS Levels;
  – doc.#15-16-0111-00-0dep
  – 4. . Update of Demand for Focused Applications of Enhanced Dependability in
  – Wireless Links doc.#15-16-0496-00-0dep
  – 5. Update Technical Requirement doc.#15-16-0557-01-0dep
  – 6. Review and revise PAR for IEEE 802.15.13 doc.#15-16-0290-01-0dep
- ✓ **Presentation**
  1. Expanded Used Cases and Related Areas for Dependable Wireless Network
  – doc.#15-16-0777-00-0dep

High Rate Rail Communications IG

- **Listening contributions**
  - MHN-E System for HRRC (15-16-0756-00-hrrc)
    - Background
    - Overview of MHN-E System
    - Demonstration Plan
  - Recent Studies on HRRC Technologies (15-16-0757-01-hrrc)
    - Mobility management
    - Numerology study

- **Discussion on other issues**
  - Additional technical discussions on HRRC
  - Discussion on future plans
  - Draft PAR and CSD

THz IG

- **1 joint meeting with TG3d on Mon PM2**
  - 10 participants

- **1 contribution:**
  - T.Kürner (TU Braunschweig), "On the future Working Method of the IG THz," (15-16-0776r00)

  - Discussion on picking the places for meetings from the full list of Plenary and Wireless Interims rather than a fixed schedule, i. e. meeting on Plenaries only
  - Organization of Workshops at IEEE scientific conference may be another opportunity to attract more interest

WNG SC

- **Presentation:**
- **Long Range Optical Wireless Communication for Automotive applications (15-16-0793-00) from Yeong Min Jang**

Maintenance SC

- No Standards issues reported
- No issues with Operations Manual reported

IETF SC

- Status Updates
  - 6tisch
  - Core
  - 6lo
  - Roll
  - Detnet
  - lp-wan
  - t2trg
  - Ace
- IEEE 802.15 and IETF liaison communications

References

- **This document**
- **All Documents**
  - https://mentor.ieee.org/802.15/documents
    - Current draft is in the members-only area
      - http://www.ieee802.org/15 → Members_Only_Area
      - 802.11 members log in using 802.11 username and password

RR-TAG (802.18) to 802.11 Liaison Report

Date: 2016-11-11

Authors:

Name	Affiliations	Address	Phone	email
Rich Kennedy	Hewlett Packard Enterprise	7305 Napier Trail Austin, TX 78729	+1-737-202-7014	Rich.kennedy@hpe.com

from slide 1/4 of 11-16-1539 by Rich Kennedy, HP Enterprise

Overview

- This document summarizes the activities of the IEEE 802.18 Radio Regulatory Technical Advisory Group (RR-TAG) during the IEEE 802 Plenary in November 2016 in San Antonio.

RR-TAG Actions Taken

- **Responded to the Regulatory SC request to consider responding to the FCC 16-149 2016 Biennial Review**
- **Decided to respond during the Reply Comments period**
  - Request 1920-1930 MHz band rules be changed to support wider range of applications
  - Respond to an Comments received for FCC Part 15
- **Reviewed the terms of the revised Globalstar TLPS plan**
- **Decided to assemble a regulatory calendar, with an emphasis on WRC-19 planning**
- **Planned to provide IEEE 802 position paper on appropriate WRC-19 agenda items, per request to Glenn Parsons from developing countries' regulators**

from slide 3/4 of 11-16-1539 by Rich Kennedy, HP Enterprise

Approved Motion

- **The Chair is directed to conduct, as necessary, teleconferences on Thursdays at 2:30pm ET through May 4, 2017.**

- **Moved: John Notor**
- **Seconded: MJ Lynch**
- **Discussion?**
- **Vote: Unanimous consent**

Report on 802.21

Date: 2016-11-11

Authors:

Name	Affiliations	Address	Phone	email
Clint Chaplin	Imagicon	4750 Almaden Expy. #124-310 San Jose, CA 95118	+1-408-239-3348	firstname dot lastname at gmail dot com

Abstract

Report on 802.21 as presented to 802.11

802.21.1 (SAUC)

- **Asking for unconditional approval to publish**

802.21m (REVP)
802.21-2008 Revision Project

- **Asking for conditional approval to publish**

802.21

- **Soliciting ideas for new standards**
- **If nothing found, will start process to hibernate in March**

References

- **This document**
  - Thanks to Subir Das, Chair of 802.21
- **All Documents**
  - https://mentor.ieee.org/802.21/documents
    - Current draft is in the members-only area
      - http://www.ieee802.org/21 → Members_Only_Area
      - 802.11 members log in using 802.11 username and password

802.24 Vertical Applications Technical Advisory Group Liaison Report

Date: 2016-11-10

Author:

Name	Company	phone:
Tim Godfrey	EPRI	**Email:**

+1-913-706-3777
tim.godfrey@ieee.org

802.24 Overview

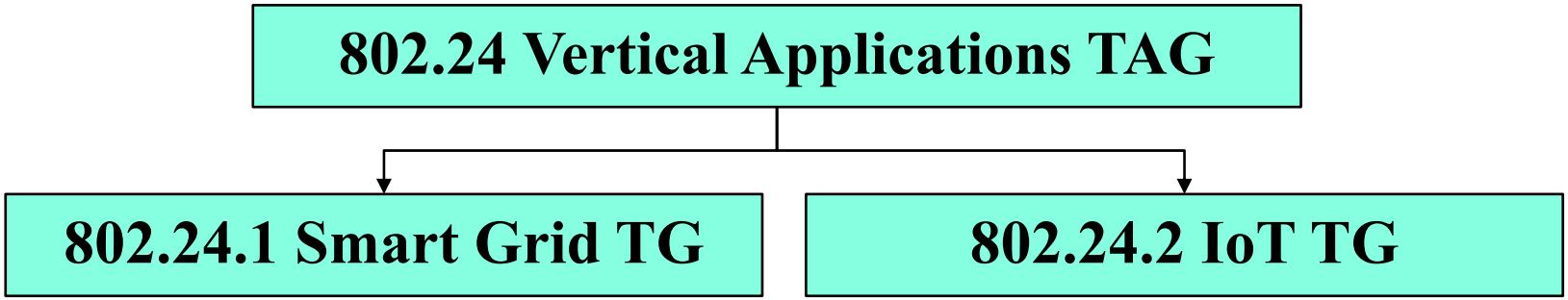

- **802.24.1 Smart Grid Task Group**
  - Internal / external coordination in matters related application of IEEE 802 standards for Smart Grid
  - 802.24.1 TG meets at Plenaries and Wireless Interims
- **802.24.2 IoT Task Group**
  - Internal / external coordination in matters related application of IEEE 802 standards for Internet of Things (IoT)
  - 802.24.2 TG meets at Plenaries and 802 Interims
- **Nov Agenda:** 24-16-0033r0
- **Closing Report** 24-16-0037r0
- **Minutes** 24-16-0035r0

from slide 2/3 of 11-16-1545 by Tim Godfrey, EPRI

802.24 Activities – Nov 2016

- **Completed white paper on Sub 1 GHz wireless**
  - Document 24-16-0036r0
- **Discussion on SGIP PAP2 Wireless Matrix Update**
- **Liaison update on IEEE P2413 IoT Architecture**
  - "Thin draft" to be released in 1Q 2017
- **Joint Session with 802.1 for white paper on applications of IEEE 802 Time Sensitive Networking (TSN) for utilities**

IEEE 802.1 OmniRAN TG Status Report to IEEE 802 WGs

- **Date:** 2016-11-10

Authors:

Name	Affiliations	Address	Phone	email
Max Riegel	Nokia Bell Labs		+491732938240	maximilian.riegel@nokia.com

from slide 1/4 of 11-16-1542 by Max Riegel, Nokia Bell Labs

IEEE 802.1 OmniRAN TG Resources

- **OmniRAN TG maintains a Wiki page on mentor to reflect its status and achievements**
  - https://mentor.ieee.org/omniran/bp/StartPage
  - Also showing meeting announcements and conference call dial-in information
- **OmniRAN filespace on mentor is used for contributions and meeting documents**
  - https://mentor.ieee.org/omniran/documents
- **Recent P802.1CF D0.3 draft is available by**
  - http://www.ieee802.org/1/files/private/cf-drafts/d0/802-1cf-d0-3.pdf
    - w/ 802.11 credentials
- **FYI: OmniRAN P802.1 PAR**
  - https://development.standards.ieee.org/get-file/P802.1CF.pdf?t=81644900003

from slide 2/4 of 11-16-1542 by Max Riegel, Nokia Bell Labs

OmniRAN TG Achievements

San Antonio meeting, Nov 7th – 10th

- **Comment resolution of TG ballot recirculation on draft D0.3**
  - Recirculation took place October 18th – Nov 3rd
  - Roughly 50 comments received and 35 resolved during meeting
    - Agreement to restructure section 7.1 on network initialization
    - Base agreement on concept for network instantiation
    - Discussion about ASA vs. TVWS
- **Discussion on going forward to draft D0.4**
  - D0.4 should address current flaws in Functional Description chapter
    - Description of attributes
    - Relation to existing IEEE 802 standards
    - Restructuring section 7.1 on network initialization
- **Slide set for introduction of P802.1CF to IETF in Seoul next week.**
- **Estimated timeline for P802.1CF within current scope:**
  - Starting WG ballot after March 2017, Sponsor Ballot Nov 2017
- **Special session on 5G SC Action A on Nov 9th**
  - Productive session. Progressing towards common understanding of targets
  - Achieved (much) better understanding of role and operation of Industry Connections
  - Initial draft of ICAID available, but not discussed yet

from slide 3/4 of 11-16-1542 by Max Riegel, Nokia Bell Labs

Looking forward to next session in Atlanta, GA, Jan 16-19, 2017

- **Envisioned topics:**
  - Completion of comment resolution of P802.1CF-D0.3
  - Enhancements to Functional Description chapter
    - Description of attributes
    - Relation to existing IEEE 802 standards
    - Restructuring section 7.1 on network initialization
  - Special session on progressing the planning for Industry Connections activity on 5G SC Action A
    - Progress ICAID
- **Conference calls:**
  - Upcoming conference calls
    - December 6th , 09:30am ET
      - 5G SC Action A: Discuss ICAID proposal
    - December 13th , 09:30am ET
      - P802.1CF: Progress D0.3 comment resolution

from slide 4/4 of 11-16-1542 by Max Riegel, Nokia Bell Labs

IEEE 802.11-IETF Liaison Report

Date: 2016-11-10

Authors:

Name	Company	Address	Phone	email
Dorothy Stanley	Hewlett Packard Enterprise	1322 Crossman Ave Sunnyvale, CA	630-363-1389	dorothy.stanley@hpe.com

Abstract

This presentation contains the IEEE 802.11 – IETF liaison report for November 2016.

IETF Meetings

- **Upcoming Meetings:**
  - November 13-18, 2016 – Seoul Korea
  - March 26-31, 2017 – Chicago
  - July 16-21, 2017 – Prague
  - November 12-17, 2017 – Singapore
- **http://www.ietf.org**
  - Newcomer training: https://www.ietf.org/edu/process-oriented-tutorials.html#newcomers
  - April 2016: Wireless Tutorial (Donald Eastlake), 802.11 & 802.15 tutorials (Dorothy Stanley, Charlie Perkins), see 11-16/500, July 2016: Pat Thaler & Juan Carlos – 802.1E (Privacy Considerations) and 802.c (Local MAC address usage) https://www.ietf.org/edu/tutorials.html
  - http://tools.ietf.org/dailydose/

IETF- IEEE 802 Liaison Activity

- **Joint meetings, agenda and presentations**
  - http://www.iab.org/activities/joint-activities/iab-ieee-coordination/
  - 2016-09-09 teleconference held; topics included Multicast, ITS, OWE, 5G, IoT, IRTF activities
  - Tutorial request: present 802.11/.15 updates in Nov 2016, see https://mentor.ieee.org/802.11/dcn/16/11-16-0500-01-0000-ietf-95-wireless-tutorial-802-11-overview.pptx
- **RFC 7241, "The IEEE 802/IETF Relationship" has been published (RFC4441 update)**
  - https://datatracker.ietf.org/doc/rfc7241/
- **IEEE 802 Liaisons list is available**
  - http://ieee-sa.centraldesktop.com/802liaisondb/FrontPage
- **802 EC "IETF/IAB/IESG" 802 EC Standing Committee**
  - Formed March 2014, Pat Thaler as chair
  - Met during November 2016 Plenary: Tuesday PM1, reviewed joint activity status
  - Next meeting during March 2017 plenary

Multicast Topics

- **Multicast issues were discussed at the IETF-IEEE 802 meeting Sept 29th 2015 and a presentation given at the November 2015 IETF meeting**
  - See https://mentor.ieee.org/802.11/dcn/15/11-15-1261-02-0arc-mulicast-performance-optimization-features-overview-for-ietf-nov-2015.ppt
  - Further actions: ietf mailing list has been established for ongoing discussion, will include additional 802. wireless groups, see http://www.ieee802.org/11/email/stds-802-11/msg01838.html
  - Multicast considerations Internet draft describing use cases, issues, etc. under development, see https://tools.ietf.org/html/draft-perkins-intarea-multicast-ieee802-01
- **Insights**
  - Multicast used for multiple types of traffic including ARP/ND, routing protocols, video applications, and these might need to be transmitted at different MCS
  - Implementations might consider APIs to allow MCS differentiation
  - Current Proxy ND support does not address Secure ND, see RFC 3971
  - **RFC 6775, Neighbor Discovery Optimization for IPv6 over Low-Power Wireless Personal Area Networks (6LoWPANs) defines a registration mechanism for accomplishing proxy ND: IoT and other applications motivating registration over discovery**

IETF BOFs at IETF November 13-18, 2016 meeting

- **See https://datatracker.ietf.org/wg/bofs/**

banana	BANdwidth Aggregation for interNet Access, also see https://datatracker.ietf.org/wg/banana/charter/ and https://datatracker.ietf.org/doc/draft-zhang-banana-problem-statement/
dnsbundled	Bundled Domains, also see https://datatracker.ietf.org/wg/dnsbundled/charter/

IETF Charters under consideration

- **IPv6 over Low Power Wide-Area Networks (lpwan), see https://datatracker.ietf.org/doc/charter-ietf-lpwan/ and also https://tools.ietf.org/html/draft-farrell-lpwan-overview-04**

- **IP Wireless Access in Vehicular Environments (ipwave), see https://datatracker.ietf.org/doc/charter-ietf-ipwave/ and also https://datatracker.ietf.org/wg/its/documents/**

IRTF Drafts of interest

- **Recall PKEX removed from 11ai, modified protocol review and discussion in IRTF: Password-authenticated protocol to allow two devices to exchange "raw" (uncertified) public keys and establish trust that the keys belong to their respective identities (PKEX) see https://www.ietf.org/id/draft-harkins-pkex-01.txt**

Of Interest to Smart Grid

- **6LO**
  - Working Group website: http://datatracker.ietf.org/wg/6lo/charter/
  - Focus: IPv6 over Networks of Resource-constrained Nodes
  - See WNG presentation: https://mentor.ieee.org/802.11/dcn/15/11-15-1085-00-0wng-6lowpan-over-802-11.pptx and
  - http://datatracker.ietf.org/doc/draft-delcarpio-6lo-wlanah/
  - https://tools.ietf.org/html/draft-thubert-6lo-routing-dispatch-06
  - https://tools.ietf.org/html/draft-thubert-6lo-backbone-router-02
  - Unique IPv6 Prefix Per Host, https://tools.ietf.org/html/draft-jjmb-v6ops-unique-ipv6-prefix-per-host-00
    - *The concepts in this document were originally developed as part of a large scale, production deployment of IPv6 support for a community Wi-Fi service.*
- **ROLL: Working Group website:** http://datatracker.ietf.org/wg/roll/
  - Focus: Routing over Low Power and Lossy Networks
  - Of interest: **https://tools.ietf.org/html/draft-ietf-6lo-ethertype-request-01**
- **CORE : (Constrained RESTful Environments) Working Group website:** http://datatracker.ietf.org/wg/core/
  - Focus: framework for resource-oriented applications intended to run on constrained IP networks.

CAPPORT WG

- **CAPtive PORTal: https://datatracker.ietf.org/wg/capport/charter/**
- **The CAPPORT Working Group will define secure mechanisms and protocols to**
  - allow endpoints to discover that they are in this sort of limited environment,
  - provide a URL to interact with the Captive Portal, - allow endpoints to learn about the parameters of their confinement,
  - interact with the Captive Portal to obtain information such as status and remaining access time, and
  - optionally, advertise a service whereby devices can enable or disable access to the Internet without human interaction. (RFC 7710 may be a full or partial solution to the first two bullets)
- **Note: related to OWE proposal in TGmc, see https://mentor.ieee.org/802.11/dcn/15/11-15-1184-05-000m-owe.docx**
- **IETF draft Last call to start shortly: see https://tools.ietf.org/html/draft-harkins-owe-04**

from slide 10/19 of 11-16-1315 by Dorothy Stanley, HPE

RADEXT WG

- **See http://datatracker.ietf.org/wg/radext/**

- **RADIUS Extensions**
  - The RADIUS Extensions Working Group will focus on extensions to the RADIUS protocol required to define extensions to the standard attribute space as well as to address cryptographic algorithm agility and use over new transports.
  - In addition, RADEXT will work on RADIUS Design Guidelines and define new attributes for particular applications of authentication, authorization and accounting such as NAS management and local area network (LAN) usage.

- **Updates [Nov 2016]**
  - **Submitted for publication: RADIUS Extensions for IP Port Configuration and Reporting. See https://datatracker.ietf.org/doc/draft-ietf-radext-ip-port-radius-ext/**
  - Considerations regarding the correct use of EAP-Response/Identity, see https://datatracker.ietf.org/doc/draft-ietf-radext-populating-eapidentity/
  - (Related) RFC 7664, "Dragonfly Key Exchange" published, see https://datatracker.ietf.org/doc/rfc7664/
  - Updated: Adding Support for Salted Password Databases to EAP-pwd has completed IETF last call, see https://datatracker.ietf.org/doc/draft-harkins-salted-eap-pwd/

Home Networking (homenet) WG

- **See https://datatracker.ietf.org/wg/homenet/**

- **This working group focuses on the evolving networking technology within and among relatively small "residential home" networks**
  - The task of the group is to produce an architecture document that outlines how to construct home networks involving multiple routers and subnets.
  - Home Networking Architecture for IPv6, Published as IPv6 Home Networking Architecture Principle: http://datatracker.ietf.org/doc/rfc7368/
  - Home Networking Control Protocol, published as RFC 7788, see https://datatracker.ietf.org/doc/rfc7788/

- **Updates [Nov 2016] Documents of interest:**
  - New individual submissi**on: Special Use Top Level Domain '.homenet', see https://datatracker.ietf.org/doc/draft-pfister-homenet-dot/**
  - Home Networking Control Protocol (revisions), see https://datatracker.ietf.org/doc/draft-ietf-homenet-hncp-bis/
  - Of Interest (no longer active): Home Network Wi-Fi Roaming, see https://datatracker.ietf.org/doc/draft-barth-homenet-wifi-roaming/

Operations Area Working Group

- **http://datatracker.ietf.org/wg/opsawg/**
  - Area WG processes submissions related to Operations Area WGs that have closed
  - Control and Provisioning of Wireless Access Points (CAPWAP) Working Group closed in 2009

- **Responded to requests from OPSAWG chairs for IEEE 802.11 review**
  - "Alternate Tunnel Encapsulation for Data Frames in CAPWAP" http://www.ietf.org/id/draft-zhang-opsawg-capwap-cds-02.txt , see Slide 5 in11-14-0368-01
  - "IEEE 802.11 MAC Profile for CAPWAP" https://datatracker.ietf.org/doc/draft-ietf-opsawg-capwap-hybridmac/ , see 11-14-0684-01
  - CAPWAP Hybrid MAC published as RFC7494, http://datatracker.ietf.org/doc/rfc7494/
  - "CAPWAP extension for 802.11n and Power/channel Autoconfiguration" http://datatracker.ietf.org/doc/draft-ietf-opsawg-capwap-extension/ , see 11-14-0913-01

- **Updates [Nov 2016] Operations Area Working Group work group items**
  - Updated: The TACACS+ Protocol, see https://datatracker.ietf.org/doc/draft-ietf-opsawg-tacacs/
  - Updated: In IESG evaluation: Alternate Tunnel Encapsulation for Data Frames in CAPWAP, see http://datatracker.ietf.org/doc/draft-ietf-opsawg-capwap-alt-tunnel/
  - Of interest: RFC6632, An Overview of the IETF Network Management Protocols, see https://tools.ietf.org/html/rfc6632
  - Of Interest: RFC7548, Management of Networks with Constrained Devices: Use Cases, see https://datatracker.ietf.org/doc/rfc7548/

Transport Layer Security (TLS)

- **Transport Layer Security Working Group website: http://datatracker.ietf.org/wg/tls/charter/**

- **Work underway on a new version of TLS (used in EAP methods): Transport Layer Security Protocol Version 1.3**

- **Updates [Nov 2016]**
  - Updated: TLS version 1.3 https://datatracker.ietf.org/doc/draft-ietf-tls-tls13/
  - Updated: Elliptic Curve Cryptography (ECC) Cipher Suites for Transport Layer Security (TLS) Versions 1.2 and Earlier, see http://datatracker.ietf.org/doc/draft-ietf-tls-rfc4492bis/

Extensions for Scalable DNS Service Discovery (dnssd)

- **Working Group website: http://datatracker.ietf.org/wg/dnssd/charter/**
- **Charter: Develop scalable DNS-SD/mDNS Extension requirements and standard solutions to address problematic use of mDNS and DNS-SD in networks today**
  - mDNS discovery of services on other links is not possible
  - Multicast transmissions over wireless are very expensive
  - Addressed with different ad hoc technologies
- **Of interest to: Homenet, Zero configuration, Enterprise-grade vendors of 802.11 infrastructure, Multi-link mesh networking**

- **Updates [Nov 2016]**
  - Updated: Hybrid Multicast/Unicast DNS-Based Service Discovery, see https://datatracker.ietf.org/doc/draft-ietf-dnssd-hybrid/
  - Updated: DNS Push Notifications, see https://datatracker.ietf.org/doc/draft-ietf-dnssd-push/
  - New: Privacy Extensions for DNS-SD, see https://datatracker.ietf.org/doc/draft-ietf-dnssd-privacy/

Of Interest: Network-Based Mobility Extensions (NETEXT)

- **NETEXT: http://datatracker.ietf.org/wg/netext/charter/**

- **RFC 7561 published: Mapping PMIPv6 QoS Procedures with WLAN QoS Procedures, see http://datatracker.ietf.org/doc/rfc7561/**

- **Abstract: This document provides guidelines for achieving end to end Quality- of-Service (QoS) in a Proxy Mobile IPv6 (PMIPv6) domain where the access network is based on IEEE 802.11. RFC 7222 describes QoS negotiation between a Mobility Access Gateway (MAG) and Local Mobility Anchor (LMA) in a PMIPv6 mobility domain. The negotiated QoS parameters can be used for QoS policing and marking of packets to enforce QoS differentiation on the path between the MAG and LMA. IEEE 802.11, Wi-Fi Multimedia - Admission Control (WMM-AC) describes methods for QoS negotiation between a Wi-Fi Station (MN in PMIPv6 terminology) and an Access Point. This document provides a mapping between the above two sets of QoS procedures and the associated QoS parameters. This document is intended to be used as a companion document to RFC 7222 to enable implementation of end to end QoS.**

Protocols for IP Multicast (PIM)

- **PIM: http://datatracker.ietf.org/wg/pim/charter/**
  - The Working Group charter includes: "Optimization approaches for IGMP and MLD to adapt to link conditions in wireless and mobile networks and be more robust to packet loss."
  - And a work item (April 2016) "submit solutions for IGMP and MLD to adapt to wireless link conditions"
  - RFC 7761 published, Protocol Independent Multicast - Sparse Mode (PIM-SM): Protocol Specification (Revised), https://datatracker.ietf.org/doc/rfc7761/

- **Of interest:**
  - Updated: A YANG data model for Protocol-Independent Multicast (PIM), see https://datatracker.ietf.org/doc/draft-ietf-pim-yang/ and A YANG data model for Internet Group Management Protocol (IGMP) and Multicast Listener Discovery (MLD), see https://datatracker.ietf.org/doc/draft-ietf-pim-igmp-mld-yang/
  - RFC 2236: Internet Group Management Protocol, Version 2 (IPv4), https://tools.ietf.org/html/rfc2236
  - RFC 2710: Multicast Listener Discovery (MLD) for IPv6, https://www.ietf.org/rfc/rfc2710.txt

Deterministic Networking (DETNET)

- **DETNET: https://datatracker.ietf.org/wg/detnet/charter/**
  - The Deterministic Networking (DetNet) Working Group focuses on deterministic data paths that operate over Layer 2 bridged and Layer 3 routed segments, where such paths can provide bounds on latency, loss, and packet delay variation (jitter), and high reliability.
  - The Working Group addresses Layer 3 aspects in support of applications requiring deterministic networking.
  - The Working Group collaborates with IEEE802.1 Time Sensitive Networking (TSN), which is responsible for Layer 2 operations, to define a common architecture for both Layer 2 and Layer 3.
  - Example applications for deterministic networks include professional and home audio/video, multimedia in transportation, engine control systems, and other general industrial and vehicular applications being considered by the IEEE 802.1 TSN Task Group.

Of interest:

- New: DetNet Data Plane Protocol and Solution Alternatives, see https://datatracker.ietf.org/doc/draft-ietf-detnet-dp-alt/
- New: Deterministic Networking Architecture, see https://datatracker.ietf.org/doc/draft-ietf-detnet-architecture/
- Updated: Deterministic Networking Use Cases, see https://datatracker.ietf.org/doc/draft-ietf-detnet-use-cases/ (note 5.1.1, reference to WiFi)
- Updated: Deterministic Networking Problem Statement, see https://datatracker.ietf.org/doc/draft-ietf-detnet-problem-statement/
- Integrated Mobile Fronthaul and Backhaul, see https://datatracker.ietf.org/doc/draft-huang-detnet-xhaul/

Active Queue Management (AQM)

- **Active Queue Management and Packet Scheduling Working Group website: http://datatracker.ietf.org/wg/aqm/charter/**
- **IETF Recommendations Regarding Active Queue Management to update https://datatracker.ietf.org/doc/rfc2309/**
- **Updates [Nov 2016]**
  - Updated: Controlled Delay Active Queue Management, see https://datatracker.ietf.org/doc/draft-ietf-aqm-codel/
  - Draft "**Guidelines for DiffServ to IEEE 802.11 Mapping**": https://tools.ietf.org/html/draft-ietf-tsvwg-ieee-802-11-00 . It is not intended to make any changes in priority mapping in 802.11 but does mention it extensively in Section 2. Also see https://www.ietf.org/proceedings/96/slides/slides-96-tsvwg-2.pdf .
  - In RFC Editor queue: The Benefits and Pitfalls of using Explicit Congestion Notification (ECN), see http://datatracker.ietf.org/doc/draft-ietf-aqm-ecn-benefits/
  - Published as RFC 7928: AQM Characterization Guidelines, see https://datatracker.ietf.org/doc/rfc7928/
  - RFC 7567 published: IETF Recommendations Regarding Active Queue Management, see https://tools.ietf.org/html/rfc7567

APPENDIX CF

IEEE P802.11
Wireless LANs

Minutes of the IEEE P802.11 Full Working Group				
Date: 2016-11-07				
Author(s):				
Name	**Company**	**Address**	**Phone**	**email**
Stephen McCann	BlackBerry Ltd	200 Bath Road, Slough, Berkshire, SL1 3XE, UK	+44 1753 667099	smccann@blackberry.com

Abstract

This document constitutes the minutes of the IEEE 802.11 full working group for the November 2016, San Antonio, Texas, USA meeting.

Please note that all affiliations at this meeting are shown in Annex A.

IEEE 802.11 Plenary Meeting – Session #160
Grand Hyatt Hotel, San Antonia, Texas, USA
November 7th – 11th, 2016

IEEE 802.11 Opening Plenary, Monday 7th November 2016

The chair: Adrian STEPHENS (Intel Corporation) opened the meeting at 10:30 Central Standard Time (CST).

Jon ROSDAHL	Vice-chair 1 (VC1)	Qualcomm
Dorothy STANLEY	Vice-chair 2 (VC2)	HPE
Stephen MCCANN	Secretary	BlackBerry

There are 389 voting and 11 Ex-Officio members of IEEE 802.11

1. Approve/modify joint opening agenda (11-16-1292r1)

1.1. This is the main agenda for the week and shows the allocation of meetings to time slots. The meeting is in Quorum.
1.2. From the IEEE, there are the following staff on site:
- Kathryn Bennet: Technical Program Management

1.3. Chair: Are there any changes required to the meeting schedule.
1.4. None seen
1.5. **Move to approve the agenda (graphic and Monday agenda only)**
1.6. Moved Al Petrick, 2nd Donald Eastlake
1.7. No objection to the approval of the agenda.

2. Notices (11-16-1293r0)

2.1. Please note that photographs and recording devices are not allowed in these meetings and put cell phones to vibrate please. There will be one exception to this rules, within WNG this week. If there are any members of the press present, please can they make themselves known.
2.2. None

3. September 2016 WG Minutes

3.1. **Move to approve the Warsaw September 2016 minutes document 11-16-1107r1**
3.2. Moved: Stephen McCann, 2nd: Stuart Kerry
3.3. Following neither discussion nor dissent, the minutes were approved by unanimous consent.

4. Attendance

4.1. Please remember to login and register your attendance.
4.2. 7 people attended this meeting for the first time out of 172 people in the room.

4.3. Chair: There will be a new member's meeting today at PM1 today, in room Republic B on the fourth floor.

5. Policy and Procedures (11-16-1312r0)

5.1. Regarding patent information, please view http://standards.ieee.org/board/pat/pat-slideset.ppt for IEEE-SA patent information.
5.2. The VC2 called for essential patents information.
5.3. No statements were made.
5.4. There were some changes made to some of the IEEE 802 EC rules in July 2016 (slide #12) and there are some proposed changes to the 802 chair's guidelines document this week (slide #13).
5.5. No questions

6. Announcements

6.1. **Email Reflectors** (11-16-1312r0 slide #16)
6.1.1. No questions

6.2. **Liaisons** (11-16-1293r0 slide #4)
6.2.1. Chair: There are quite a few liaisons both incoming and outgoing this week, as described in these slides.
6.2.2. Chair: Joseph Levy will ensure that his AANI meeting is advertised to the IEEE 802 EC email reflector for these liaison discussions.
6.2.3. Comment (C): Regarding the RSSI liaison, document 11-16-1471r0 is now on the server for further discussion this week.
6.2.4. Chair: I would like a volunteer to create a response for the liaison from 3GPP regarding estimated WLAN Throughput (11-16-1384r0). Would AANI do this please?
6.2.5. C: yes, although an extra AANI slot would be required.
6.2.6. Chair: There is a Tuesday evening slot available.
6.2.7. **Motion to modify the agenda to add an AANI slot for Tuesday PM3**
6.2.7.1. Moved: Stephen McCann, 2nd: Joseph Levy
6.2.7.2. No objection to the modification of the agenda.

6.3. **Joint meetings this week** (11-16-1293r0 slide #7)
6.3.1. This slide shows the joint meetings this week.

6.4. **Other IEEE 802 working groups** (11-16-1327r1 slide #4 and #5)
6.4.1. VC1: This slide shows links to the agendas of the other working groups, together with an additional slide showing an online schedule which is suitable for most mobile devices.

6.5. **Meeting rooms and online calendar** (11-16-0804r0 slide #6)
6.5.1. VC1: Please note that online calendar has been updated and is more automated and should match the attendance and online schedule. There is a QR code on your registration pack to find an online agenda and schedule.

6.6. **January 2017 interim** (11-16-1327r1 slide #7)
6.6.1. VC1: Please note that January 2017 will not be in the Hyatt Regency in downtown Atlanta.

The meeting will now be held in another Hyatt in Buckhead to the north of Atlanta. This venue can also be reached by the MARTA subway.

6.7. **March 2017 plenary** (11-16-1327r1 slide #7)

6.7.1. VC1: In March 2017, the meeting will be held in two hotels on the opposite sides of a road in Vancouver. Please book the Hyatt Regency, if you wish to attend the IEEE 802.11 meetings.

6.8. **Attendance** (11-16-1327r1 slide #10)

6.8.1. VC1: Please remember to register your attendance including affiliation for each meeting that you attend. Please record your attendance honestly.

6.9. **Breaks and Wednesday social** (11-16-1327r1 slide #11)

6.9.1. Please note the times of lunches and breaks.

6.9.2. Lunch is not being provided this week, as there are many food outlets in and around the hotel.

6.9.3. The social is on Wednesday evening adjacent to the bar "RoJo" on the ground floor of this hotel

6.9.4. Note that some of the hotel food outlets have special deals for IEEE 802 attendees this week.

7. Standards board decisions (11-16-1293r0 slide #8)

7.1. Chair: Since the last face to face meeting of IEEE 802.11, The IEEE 802 EC and IEEE-SA have approved the various items on the slides.

8. Status of all groups (11-16-1293r0)

8.1. Chair: Please note that the REG SC will meet for the last time this week and I would like to thank both Richard Kennedy and Peter Ecclesine for their assistance. The IEEE 802.11 showed their appreciation to Richard and Peter in the usual way.

8.2. Chair: Also note that TGaq is now operating as a Comment Resolution Committee (CRC) (slide #18) and it has moved into the sponsor ballot phase.

8.3.

8.4. There are reports of all the current groups within the document 11-16-1311r1. Here are some extra notes:

8.5. **Editor's Meeting:** This occurs at 7am on Tuesday morning. The 11aj draft will be discussed and also plans for the 11ax drafts.

8.6. **PAR SC**: This Standing Committee (SC) will formalize the review of PARs from other IEEE 802 working groups. There are 6 PARs to be reviewed this week.

8.7. **Regulatory**: This will be the last meeting of this standing committee. The main item will be to talk about WRC 2019. Going forward, IEEE 802.11 regulatory issues will be considered by IEEE 802.18.

8.8. **WNG**: There is one meeting on Tuesday morning to consider future topics for IEEE 802.11. There are currently 2 presentations.

8.9. **TGax**: There are about 500 remaining comments from the internal comment collection earlier this year. These are primarily regarding the MAC. This week's plan is to try and create a draft 1.0 and then ask for letter ballot approval.

8.10. **PDED**:
8.11. Comment (C): I just want to verify your slots as shown on the screen.

9. Any Other Business

9.1. None
9.2. Meeting recessed at 11:41 CST

Wednesday, 27th November 2016

IEEE 802.11 Mid-Week Plenary

Presiding chair: Adrian STEPHENS (Intel Corporation) opened the meeting at 10:30 CST

223 people present.

10. Approve/modify joint opening agenda (11-16-1292r4)

10.1. Chair: There have been a few changes today, so I propose to approve 11-16-1292r4
10.2. **Any objection to accepting these changes to the agenda.**
10.3. Moved: Al Petrick, Second: John Notor
10.4. No objections, so moved and approved.

11. Call for Essential Patents

11.1. Call for essential patents
11.2. No statements were made.

12. Announcements (11-16-1294r0)

12.1. **CAC**
12.2. Chair: Please can all sub-group chairs remember to attend the CAC on Thursday evening. If you can't attend, please can a delegate be found.

13. TGai Dominance Report (11-16-1187r2)

13.1. Chair: This is an updated version of the report that was presented in September 2016. Some of the values of reported votes have been corrected. The modified values have no affected the conclusion of the report.
13.2. Q: I saw that another member sent an email to the WG reflector about this document.
13.3. Chair: That email asked me to create rules about dominance going forward. I don't intend to answer the question because it is asking me to speculate about what might happen, and I don't want to add any speculation on this subject over and above that in the TGai dominance report because the outcome will depend on the specific details.

14. TGax Dominance Report (11-16-1519r0)

14.1. VC2: Please note that there is also an EC document https://mentor.ieee.org/802-ec/dcn/16/ec-16-0186-00-00EC-recommendations-for-tgax-dominance-complaint.docx, which contains recommendation actions for the EC to consider. This document is on the EC agenda.
14.2. This material has been reviewed and supported by un-conflicted members of the EC and also IEEE legal staff.
14.3. Chair: I propose to add 30 minutes discussion to the closing plenary

14.4. TGax chair: I would like clarify how I now operate motions within TGax regarding the recommendation of the report. When do I have to adopt this new mode of counting votes?
14.5. Chair: It will be after Friday, as the EC needs to consider the recommendations first.
14.6. Chair: I would like to thank Dorothy Stanley for performing this investigation and producing this report.

15. Wi-Fi Alliace Liaison (11-16-1523r0)

15.1. The next meeting of the Wi-Fi Alliance is in Sydney, Australia in February 2017
15.2. No questions

16. IEEE 802E (Privacy) report

16.1. The IEEE 802E session last night was cancelled, as the main topic this week was presented in the WNG session. Please can you look at document 11-16-1492r0 for further information.
16.2. No questions

17. Room change requests I

17.1. Chair: are there any requests for extra slots please?
17.1.1. TGaz: Thurs AM2
17.2. VC1: I can try to find something for you and will reply later in this meeting

18. 3GPP RSSI liasion (11-16-1471r0)

18.1. Essentially this liaison is asking for test cases from IEEE 802.11. In order to do this a recommended practice would be required and so the response to this liaison is inviting 3GPP to work on a PAR to start a project on a recommended practice.
18.2. Chair: what do you want to do next?
18.3. A: I will bring a liaison response to the Friday closing plenary for approval.
18.4. Q: Why not bring back IEEE 802.11T? Then we could liaise those documents to 3GPP.
18.5. Chair: Not if I follow the rules, as this draft is no longer available.
18.6. Q: I don't think that test cases are within the scope of IEEE 802.11. Perhaps this is a task for the Wi-Fi Alliance.
18.7. A: That's not relevant for the liaison response from IEEE 802.11 to 3GPP.

19. Room change requests II

19.1. Chair: Thurs AM1 is the only slot available for TGaz.
19.2. Is there any objection to modifying the agenda with this extra meeting?
19.3. None seen.

20. PDED ad-hoc report (11-16-1521r1)

20.1. This is the output from the PDED ad-hoc group.
20.2. There is a draft liaison which was approved by the PDED ad-hoc 11-16-1493r4, which will be considered later in this meeting.

20.3. Chair: regarding who creates the liaison response, I would prefer that it is from IEEE 802.11
20.4. Q: Please can you add the ad-hoc motion result to this motion please.
20.5. A: Yes.
20.6. **PDED Motion** (11-16-1313r1 slide #4)
20.6.1. **The IEEE 802.11 WG approves sending the response in 11-16-1493-04 to 3GPP RAN1 in response to their request that IEEE 802.11 adopt an ED of -72dBm, granting the IEEE 802.11 WG chair editorial license**
20.6.2. Moved: Andrew Myles, 2nd: Jim Petranovich
20.6.3. For: 94, Against: 2, Abstain: 28 (Motion passes)

21. Light Communication TIG (11-16-1526r0)

21.1. This is a request to start a Light Communication TIG
21.2. **TIG Motion** (11-16-1313r1 slide #5)
21.2.1. **Approve formation of a Topic Interest Group on the topic of light communication to further clarify technical aspects of the proposal**
21.2.2. Moved: Vinko Erceg, 2nd: Andrew Myles
21.2.3. Q: What is the deliverable please?
21.2.4. A: A report addressing difference technical considerations. This will be a pre-cursor to creating the PAR and CSD material for a study group.
21.2.5. Q: There was a different motion on the screen a few minutes ago and this seemed to state a group within IEEE 802.11. So is this an IEEE 802.11 TIG or for another group?
21.2.6. A: This is for a IEEE 802.11 project
21.2.7. For: 70, Against: 13, Abstain: 58 (Motion passes)
21.2.8. Chair: Nicola Serafimovski is willing to chair this group, although he is a new member of IEEE 802.11. I would like to use the word Light Communication please for this TIG.

22. WUR SG (11-16-1313r1)

22.1. These are the motions to approve the PAR and CSD created by the WUR study group.

22.2. **PAR Motion** (11-16-1313r1 slide #6)
22.2.1. **Believing that the PAR contained in the document referenced below meets IEEE-SA guidelines, Request that the PAR contained in [doc:802.11-16/1045r9] be approved and submit to IEEE 802 EC for approval to submit to NesCom.**
22.2.2. [WUR SG: Moved: Shahrnaz Azizi, 2nd: Leif Wilhelmsson, Result: Y: 34, N: 0, A: 1]
22.2.3. Moved: Minyoung Park, 2nd: VK Jones
22.2.4. For: 119, Against: 0, Abstain: 14 (Motion passes)

22.3. **CSD Motion** (11-16-1313r1 slide #7)
22.3.1. **Believing that the CSD contained in the document referenced below meets IEEE 802 guidelines, Request that the CSD contained in [doc:802.11-16/936r4] be approved and submitted to IEEE 802 EC for approval.**
22.3.2. [WUR SG: Moved: Yongho Seok, 2nd: Bin Tian, Result: Y: 28, N:0, A:0]
22.3.3. Moved: Yunsong Yang, 2nd: Guido Hiertz
22.3.4. For: 115, Against: 0, Abstain: 11 (Motion passes)

22.4. **Responses to PAR comments motion** (11-16-1313r1 slide #8)

22.4.1. **Approve the comment responses as indicated in https://mentor.ieee.org/802.11/dcn/16/11-16-1528-00-0wur-comments-on-wur-sg-par-and-csd.ppt**
22.4.2. Moved: Minyoung Park, 2nd: Shahrnaz Azizi
22.4.3. For: 103, Against: 0, Abstain: 10 (Motion passes)

23. Liaison to 3GPP RAN2 (11-16-1510r1)

23.1. C: There's an open liaison to RAN2 that was not put on today's agenda.
23.1.1. Chair: Is there any objection to adding this item to the agenda?
23.1.2. A: Yes, as the liaison is not finished yet.
23.1.3. C: It's only a report at this stage.
23.1.4. A: That's ok then.
23.1.5. Is there any objection to amending the agenda?
23.1.6. None seen
23.2. Document 11-16-1510r1 was then presented.
23.3. This is being worked on within the AANI ad-hoc,

24. AoB

24.1. Chair: I would like to have 30 minutes discussion about the TGax dominance report during the closing plenary on Friday. If you have any clarification questions in the meantime, please can you email them to me and I will consider them during the CAC on Thursday evening.

24.2. VC1: I would like to remind you about the social from 6.30pm – 9.30pm which will be now in the Texas Ballroom foyer. This will be a standup dinner reception. More details are in document 11-16-1327r3.

25. Recess

25.1. Meeting recessed at 12:15 CST

Friday, 11th November 2016

IEEE 802.11 Closing Plenary

Call to order at 08:04 CST by Adrian STEPHENS (Intel Corporation).

59 people present in the room.

26. Agenda (11-16-1294r7)

26.1. Chair: Since the previous version, I've added an agenda item for any announcements regarding the TGax dominance allegations together with a Q&A session. In addition there are some new motions.
26.2. **Move to approve the agenda in document 11-16-1294r7**
26.3. C: So we are not allowed to speculate on the content of the agenda.
26.4. Chair: I believe this would be out of order.
26.5. C: I would like to make a motion to amend the agenda.
26.6. Chair: The motion is not on the floor yet.
26.7. VC1: There is a member who would like to amend the agenda. There is no motion on the floor, however a straw poll to determine the will of the group is in order at this point.
26.8. Chair: Ok, that's fine
26.8.1. **Straw Poll: Do you want a discussion topic on the report on TGax dominance?**
26.8.2. Chair: I will recuse myself at this point and hand over to VC1.
26.8.3. C: I think members require a venue to discuss the content of the TGax report. This doesn't seem to have been included on the IEEE 802.11 agenda.
26.8.4. C: This discussion will occur during the EC meeting later today. The IEEE 802.11 cannot modify the report or produce an alternative.
26.8.5. C: IEEE 802.11 usually provides an input into the EC with an adopted position on such items and that position needs to be determined within IEEE 802.11.
26.8.6. Yes: 23, No: 13
26.8.7. VC1: So I would like to recommend that we add an agenda item to the agenda. I also hand back control of the meeting to the chair.
26.9. **Move to approve the agenda in document 11-16-1294r8**
26.10. Moved: Dorothy Stanley, Second: Stephen McCann
26.11. No objections, so moved and approved.

27. Call for Essential Patents

27.1. The meeting is still operating the P&Ps as described on Monday
27.2. Call for Essential Patents and Letters of Assurance (LoA)
27.3. None

28. Announcements (11-16-1294r1)

28.1. **Minutes and documents**
28.1.1. Please can everyone remember that minutes, should be completed within 30 days, once the meeting is closed.

28.2. **Preparation for January 2017**

28.2.1. There is currently a draft agenda for the January 2017 meeting, starting on 15th January 2017 and there will be our usual CAC teleconference meetings between now and that meeting, on December 12th 2016 and January 9th 2017 noon ET.

28.3. **LoA** (slide #10)

28.3.1. Chair: Please note that there is one outstanding LoAs as shown on the slide.

28.3.2. No questions

28.4. **IEEE Store** (slide #11)

28.4.1. Chair: everything is currently up to date.

28.4.2. No questions

28.5. **ISO/IET JTC1/SC6** (slide #12)

28.5.1. This slide shows the drafts, which will be shared with ISO.

28.5.2. No questions

28.6. **EC handling of TGax dominance allegations**

28.6.1. Chair: I believe that it will be the EC that determines remedies to the TGax dominance allegation. I would now like to invite the IEEE 802 Chair to speak further about this.

28.6.2. IEEE 802 Chair: I would like to explain my affiliations first. These are listed on the website: http://www.ieee802.org/wgchairs.shtml. There will be an hour slot during the EC meeting today. The first 30 minutes will be for the reading of the report. This will also allow Q&A. The second 30 minutes will be for decisions. This discussion will be for un-conflicted members only. The EC will decide who is conflicted or not, in the case of any doubt. Hopefully a conclusion will be determined by the end of the hour. IEEE staff will be present on the telephone to monitor proceedings.

28.6.3. C: Why such a short period of time?

28.6.4. IEEE 802 Chair: I thought it was quite a long period of time.

28.6.5. C: I feel that this report has been rushed and many people haven't been able to process all the content. I would like to state this same point to the EC.

28.6.6. IEEE 802 Chair: How long would you like?

28.6.7. C: As long as it takes. Perhaps during the next EC teleconference.

28.6.8. C: During the second 30 minutes, will non-conflicted members on the floor be allowed to speak.

28.6.9. IEEE 802 Chair: The plan was not to.

28.6.10. C: I believe that there are no un-conflicted members of the EC.

28.6.11. C: I support the earlier comment about the length of time for this debate.

28.6.12. C: I would also like to say that 30 minutes is not long enough for the EC meeting.

28.6.13. IEEE 802 Chair: So what would you like?

28.6.14. C: 30 minutes for reading, 30 minutes for Q&A, 30 minutes for the un-conflicted members discussion.

28.6.15. IEEE 802 Chair: It will be 1.30pm – 2.30pm at the moment. I may extend it to 1.30pm – 3.00pm.

28.6.16. C: The topic is about professional conduct, so it's all about education to the members and I think that the IEEE 802 has failed in this respect.

28.6.17. C: So it needs to be determined who is conflicted, which is rather complicated. Additionally, when people are accused of certain actions, they should have time to respond to this. I feel that this is not a fair and due process.
28.6.18. Secretary: I would like to point out that these minutes can be criticized and I will update them accordingly. I want this to be an open record of what was discussed.
28.6.19. C: Perhaps another forum could also be determined for further discussion of this report and indeed the process.

29. Meeting Location (11-16-1327r2) slide #21

29.1. **VC1: Can I have a show of hands to see who is in favor of returning to this location again?**
29.2. For: 41, Against: 6
29.3. **VC1: How many people enjoyed the social?**
29.4. Yes: 18, Did not: 0, Did not attend: 16
29.5. C: There will be a survey distributed from the IEEE 802 executive secretary, later today, to determine some more detailed decisions about future venues.

30. Future Venues (11-16-1330r0, slide #6)

30.1. VC1: Please note that the January 2017 meeting in Atlanta is in a different hotel from the originally advertised one. It will be in Buckhead, to the north of the city and not downtown.
30.2. C: Will 802.1 and 802.3 be joining us in Atlanta?
30.3. VC1: Not exactly. It's going to be 802.1 and all the wireless groups, as it is a IEEE 802 wireless interim.

31. Treasurer's Report (11-16-1330r0 slide #2)

31.1. VC1: This is the current treasurer's report. This is the balance sheet to 31st October 2016.
31.2. Please note that fewer people attended the Warsaw meeting than expected. Fortunately, the loss was reduced by Arinex and other IEEE 802 members.

32. Timeline Update

32.1. There are changes to the following timelines: TGaj and TGay. The timeline chart will be updated shortly.

33. WG Committee Reports (11-16-1314r0)

33.1. **Attendance** (slide #3)
33.1.1. The main attendance this week has been in TGax.
33.1.2. It's also interesting to see that the general trend is an increase in document submissions per meeting.
33.1.3. No questions

33.2. **Technical editor** (slide #9)

33.2.1. IEEE 802.11-2016 will be published by the end of 2016 and then TGai and TGah will be in the new year.
33.2.2. In January 2017, there will be an extra meeting regarding the style of the proposed TGax draft.
33.2.3. The amendment ordering will be next considered in March 2017.
33.2.4. C: The style discussion in January 2017 is essential, as the baseline is becoming very large. Indeed, there was a discussion about this from a couple of years ago (11-14-1188 - check), which should be re-considered.
33.2.5. VC2: There will be a meeting in January called "New Style" regarding this topic.

33.3. **AANI SC** (slide #20)
33.3.1. No questions

33.4. **ARC SC** (slide #24)
33.4.1. No questions

33.5. **PAR SC** (slide #20)
33.5.1. VC1: These are the various comments compiled by IEEE 802.11 regarding the 5 PARs from other IEEE 802 working groups this week and 1 from IEEE 802.11.
33.5.2. No questions

33.6. **Regulatory SC** (slide #30)
33.6.1. REG Chair: this was the last meeting of this group. I would like to thank everyone who contributed to this meeting over the years.
33.6.2. Chair: Do you feel that any joint 802.11/802.18 meetings will be required?
33.6.3. REG Chair: This was discussed in 802.18 this year and I think that a formal liaison should be established.
33.6.4. Chair: I'll discuss this with the IEEE 802.18
33.6.5. No questions

33.7. **WNG SC** (slide #39)
33.7.1. There were two presentations this week for WNG SC:
33.7.1.1. Privacy issues in IEEE 802.11 networks
33.7.1.2. LiFi – Light Communications for IEEE 802.11
33.7.2. No questions

33.8. **PDED ad-hoc** (slide #41)
33.8.1. It was agreed to continue the life of the ad-hoc, to continue their work with 3GPP liaisons. Some members have indicated that they will produce some simulation results in due course.
33.8.2. No questions

33.9. **IEEE 802 JTC1 SC** (slide #44)
33.9.1. No questions

33.10. **TGaj** (slide #46)
33.10.1. Q: When will the sponsor ballot pool be opened?
33.10.2. A: This will occur in December.

33.10.3. Chair: IEEE-SA members (and people who have paid a one off fee) will be invited to join the pool.

33.11. **TGak** (slide #54)
33.11.1. No questions

33.12. **TGaq** (slide #57)
33.12.1. No questions

33.13. **TGax** (slide #62)
33.13.1. The task group received many submissions this week and also decided to produce a D1.0. The motion for the initial letter ballot will appear later in this meeting.
33.13.2. No questions

33.14. **TGay** (slide #67)
33.14.1. No questions

33.15. **TGaz** (slide #70)
33.15.1. No questions

33.16. **WUR SG** (slide #75)
33.16.1. No questions

34. Liaison Reports

34.1. **IEEE 802.15** (11-16-1553r0)
34.1.1. Chair: Is there any impact on 802.15.7 regarding the creation of the Light Communication TIG here in IEEE 802.11?
34.1.2. A: The topic was discussed in 802.15.7. Independently of that discussion, 802.15.7 may decide to split their PAR into 2 separate PARs anyway.
34.1.3. C: It's worth noting that 802.15.7 completed their work several years ago, so this new consideration of PARs is basically for revisions.

34.2. **IEEE 802.21** (11-16-1554r0)
34.2.1. This WG may consider going into hibernation around March 2017.
34.2.2. No questions

34.3. **IEEE 802.18** (11-16-1314r0 slide #85)
34.3.1. C: Please note that the ETSI portal page link has been updated on the IEEE 802.11 web-site.
34.3.2. No questions

34.4. **IEEE 802.24** (11-16-1314r0 slide #90)
34.4.1. No questions

34.5. **IEEE 802.1 OmniRAN** (11-16-1552r0)
34.5.1. No questions

34.6. **IETF** (11-16-1315r1)
34.6.1. Q: regarding slide #12, does this project also address lower layers (below layer 3)?
34.6.2. A: No, I don't think so.
34.6.3. Q: Can we possibly have the AQM group provide us with another update, which I think they have done at IEEE 802.11 previously.
34.6.4. No questions

35. Recess

35.1. Chair: We are in recess. Please return at 10.15.

36. Working Group Motions (Old Business) (11-16-1313r3)

36.1. **Teleconferences (slide #10)**
36.1.1. **Move to approve the following teleconferences**

Group	Date(s)	Start	Duration
CAC	Mon Dec 12, Jan 9th	Noon ET	1 hr
TGaj	Thurs Dec 15, Jan 5	20:00 ET	1 hr
ARC	Mon Dec 12	11:00 ET	1 hr
TGak	Mon Nov 21, 28, Dec 12 (1hr), 19	10:00 ET	1.5 hrs
TGaq	Friday Dec 2,9,16, Jan 6	Noon ET	2 hr
TGax	Thur Dec 1, 8, 15 Thurs Jan 5 Thurs Jan 12	21:00 ET 11:00 ET 20:00 ET	2 hrs 2 hrs 2 hrs
TGay	Wed Jan 4th	10:00 ET	1 hr
TGaz	Wed Nov 30th	10:00 ET	1 hr
WUR	Mon Dec 12th	18:00 ET	1 hr
AANI	Thurs Dec 1, 15, Jan 5	10:00 ET	1 hr

36.1.2. Moved Dorothy Stanley , 2nd Guido Hiertz
36.1.3. No objection to approving by unanimous consent.

36.2. **TGaj Letter Ballot** (slide #11)
36.2.1. **Having approved comment resolutions for all of the comments received from LB223 on TGaj Draft D3.0 as contained in document 11-16/1524r0,**
36.2.2. **Instruct the editor to prepare Draft D4.0 incorporating these resolutions and**

36.2.3. **Approve a 15 day Working Group Recirculation Ballot asking the question "Should TGaj Draft_D4.0 be forwarded to Sponsor Ballot?"**
36.2.4. [TG vote: Moved: Haiming Wang, 2nd: Jon Rosdahl Result: 6-0-0]
36.2.5. Moved: Jiamin Chen on behalf of TGaj
36.2.6. No objection to approving by unanimous consent

36.3. **TGak Letter Ballot** (slide #12)
36.3.1. **Having approved comment resolutions for all of the comments received from LB218 on TGak Draft_D2.0 as contained in document 11-15/0556r34,**
36.3.2. **Instruct the editor to prepare Draft D3.0 incorporating these resolutions and,**
36.3.3. **Approve a 15 day Working Group Recirculation Ballot asking the question "Should TGak Draft_D3.0 be forwarded to Sponsor Ballot?"**
36.3.4. [TG vote: Moved: David Hunter, 2nd: Al Petrick, Result: 5-0-0]
36.3.5. Moved: Donald Eastlake on behalf of TGak
36.3.6. No objection to approving by unanimous consent

36.4. **TGax Letter Ballot** (slide #13)
36.4.1.1. **Instruct the TGax editor to prepare P802.11ax Draft D1.0 and**
36.4.1.2. **Approve a 30 day Working Group Technical Letter Ballot asking the question "Should TGax Draft 1.0 be forwarded to Sponsor Ballot?"**
36.4.1.3. [TGax vote: Moved: Robert Stacey, 2nd: Vinko Erceg, Result: 89-0-6]
36.4.2. Moved: Osama Aboul Magd on behalf of TGax
36.4.3. No objection to approving by unanimous consent
36.4.4. For: 45, Against: 2, Abstain: 3 (Motion passes)

36.5. **TGax Coexistence Assurance Document** (slide #14)
36.5.1. **Adopt 11-16/1348r2 as the coexistence assurance document for the 802.11ax amendment.**
36.5.2. [TGax result: Moved: Robert Stacey, 2nd: Yasu Inoue, Y/N/A: 82/0/7]
36.5.3. Moved: Stephen Palm, 2nd: Sean Coffey
36.5.4. For: 41, Against: 1, Abstain: 5 (Motion passes)

36.6. **Liaison response to 3GPP RAN4** (slide #15)
36.6.1. **The IEEE 802.11 WG approves sending the response in 11-16-1535-02 to 3GPP RAN4 in response to their liaison on round trip time (RTT) measurement accuracy, granting the WG chair editorial license.**
36.6.2. [TGaz result: Moved: Allan Zhu, 2nd: Chittabrata Ghosh, Result:14-0-3 Note request in R4-168579 (16/1338r0)]
36.6.3. Moved: Jonathan Segev, 2nd: Richard Kennedy
36.6.4. For: 36, Against: 0, Abstain: 3 (Motion passes)

36.7. **WUR SG Extension** (slide #16)
36.7.1. **Request the IEEE 802 LMSC to extend the 802.11 Wake-up Radio (WUR) Study Group.**
36.7.2. [WUR Study Group vote: Move: Steve Shellhammer, Second: Young Hoon Kwon, Results: Y 45/N 0/A 3]
36.7.3. VC2: I would like to update the motion text as follows:

36.7.4. **Request the IEEE 802 LMSC to grant the 2nd extension of the 802.11 Wake-up Radio (WUR) Study Group.**
36.7.5. C: How long is the extension for?
36.7.6. Chair: from plenary to plenary
36.7.7. Moved: Minyoung Park, 2nd: Edward Au
36.7.8. For: 44, Against: 0, Abstain: 2 (Motion passes)

36.8. **Liaison response to 3GPP RAN4** (slide #17)
36.8.1. **Approve document https://mentor.ieee.org/802.11/dcn/16/11-16-1518-01-0000-followup-liaison-response-to-3gpp-r4-164767.docx as the IEEE 802.11 response to 3GPP request R4 164767 (11-16-0772) and grant the 802.11 chair editorial license.**
36.8.2. Moved: Peter Ecclesine, 2nd: Richard Kennedy
36.8.3. For: 36, Against: 0, Abstain: 2 (Motion passes)

37. Discussion (Q&As) on TGax dominance report (11-16/1519r0 & ec-16/186r0)

37.1. Chair: this is a discussion topic.
37.2. Chair: I would like to ask the group whether members feel that I am conflicted. If anyone feels that I am, I will hand over the chair to Stephen McCann for this item.
37.3. No objections to this, so the chair continues to run the meeting.
37.4. C: I have a motion to amend the agenda please:
37.5. **Motion to modify the agenda to turn this item into an external motion**
37.6. Moved: Rolf de Vegt, 2nd: Matthew Fischer
37.6.1. For: 26, Against: 15, Abstain: 5 (Motion fails)
37.7. Chair: So motions are no longer in order for this item.
37.8. C: I feel that more time is required for the affected companies within the report to consider the report. The document was only available 2 days ago. I believe that the facts are inaccurate and also that the conclusion about dominance is incorrect. I believe that there is bias from the investigators. I would advise that the EC does not rush to any conclusion at this point.
37.9. C: The report was prepared by an investigating officer. So, what does IEEE 802.11 do?
37.10. Chair: Dorothy, acting as WG chair in this regard, is responsible for reporting findings to the EC, and they are the body who decide the remedies.
37.11. Chair: In addition, the process has been reviewed by the EC.
37.12. C: I'd like to thank the creators of the report, as I think it is an honest reflection of what occurred. I don't think there is any bias at all. I also feel that the process (which was agreed) does not allow IEEE 802.11 to discuss the content of this document and we should not be having this discussion.
37.13. C: When do the remedies come into effect, and how does it affect IEEE 802.11 members.
37.14. VC2: This is a question for the EC to consider?
37.15. Chair: There are practical questions about how to implement any remedies from the EC and I hope that the EC will provide assistance.
37.16. C: There are some members who may not be involved in any of the alleged activities and they should not be included in any special measures. I also think that we should discuss the content of the report, as there has not been enough time to consider any ramifications. I object to the current agenda and feel that this should be reconsidered.
37.17. C: I'm also concerned about the amount of time. The proposed remedy is rather harsh and some other remedy should be considered in the short term not defined in the report.

37.18. C: How many people in this group feel that the EC should not take any action today?
37.19. Straw poll: How many people thank that the EC should not take an action today?
37.20. Yes: 23
37.21. No: 16
37.22. Abstain: 7
37.23. C: I would like to thank the investigators for producing the report. I also feel that this should have occurred earlier in the process and not at D1.0. I also feel that the straw poll is inappropriate, as it could be the victim of dominance itself.
37.24. C: I feel that everyone in the room is conflicted in this regard, as our process is visible to the public. We should behave in a professional manner in this matter and be cautious moving forward.
37.25. C: This is not new. This is related to some of the patent obligations that we have and therefore there should be obligation to state special group membership.
37.26. C: I don't think the report is biased, as it does contain facts which are in the public domain. Regarding the requests for more time, this did not happen within TGai, so that request seems to be dependent on the outcome of the report itself.
37.27. C: I have heard that the report is inaccurate and I'd like to know from the speakers where the inaccuracies are.
37.28. C: The facts in the report are fine, but it is deficient. In particular, the definition of dominance has not been met and should not state so.
37.29. C: The complaint in the report seems to just address one issue, whereas the investigation is a lot broader. There are additional facts that have not been addressed within the report.
37.30. C: I don't think the currently proposed remedy is draconian. There are options within the special group to change.
37.31. Chair: Please can we now limit the queue for comments.
37.32. C: I would also like to applaud Dorothy's effort in the report. However, I disagree with the conclusion as there was no coercion. Votes were not directed. I personally have not attended the special group and have been advised or coerced in anyway. Members are here, representing themselves and not their companies. The report hints at anyone meeting in small group could be considered a special group.
37.33. C: I'd like to inform you that the EC debate will be extended by 30 minutes, as mentioned earlier.
37.34. C: I don't like how some people here present may lose their voting rights, even though they have not been included in a special group.
37.35. C: The WG chair is obliged to investigate complaints. It does put into question the whole process that is being followed by IEEE 802.11. Originally SIGs within IEEE 802.11 had web-sites and everything was in the public domain. Now this is all occurring in secret behind the scenes. There is a serious issue, which needs addressing.
37.36. C: Regarding the TGai report, it came to a different conclusion than that of the TGax report. People should be allowed due process regarding the TGax report. In addition, the topic of SIGs should be re-addressed. Indeed, why should SIGs be required for standards development? Perhaps the IEEE 802.11 model is incorrect.
37.37. Notes taken by the chair, during this agenda item, can also be seen here: http://www.ieee802.org/secmail/msg20718.html

38. Wireless Chairs Meeting

38.1. Chair: This will be at 4pm on the Sunday 15th January 2017. If you are interested in the activities of the IEEE 802 wireless WGs, please come along.

39. January 2017 Meeting (11-16-1294r2 slide #15)

39.1. Chair: Please remember that the next interim meeting is at the Grand Hyatt, Buckhead, Atlanta from January 15-20th 2017. Meeting registration is now open at http://www.ieee802.org/11/Meetings/Meeting_Plan.html

40. Adjournment

40.1. **Chair: having exhausted the agenda, the meeting is adjourned.**
40.2. The meeting adjourned at 11:25 CST

Annex A: Attendance & Affiliation

Name	Affiliation	Attended >= 75%?
Aboulmagd, Osama	Huawei Technologies Co. Ltd	Yes
Adachi, Tomoko	TOSHIBA Corporation	Yes
Ahn, Jinsoo	Yonsei University	Yes
Ahn, Woojin	WILUS	Yes
Akhmetov, Dmitry	Intel Corporation	Yes
Alpert, Yaron	Intel Corporation	Yes
Al-Taleb, Sajaa	telekom research and development/malaysia	Yes
An, Song-Haur	INDEPENDENT	Yes
Ansley, Carol	ARRIS Group	Yes
Armstrong, Lee	US Department of Transportation	Yes
Asai, Yusuke	NTT	Yes
Asterjadhi, Alfred	Qualcomm Incorporated	Yes
Au, Kwok Shum	Huawei Technologies Co. Ltd	Yes
Azizi, Shahrnaz	Intel Corporation	Yes
Bain, David	TM Technologies	Yes
baron, stephane	Canon Research Centre France	Yes
Batra, Anuj	Apple, Inc.	Yes
Bei, Jianwei	Marvell Semiconductor, Inc.	Yes
Bhandaru, Nehru	Broadcom Corporation	Yes
Bims, Harry	Bims Laboratories, Inc.	Yes
Buffington, John	Itron Inc.	Yes
Calcev, George	Huawei R&D USA	Yes
Camillo, Gentile	National Institute of Standards and Technology (NIST)	No
Canchi, Radhakrishna	Kyocera International, Inc.	Yes
Cariou, Laurent	Intel Corporation	Yes
Carney, William	Sony Corporation	Yes
Chang, Soo-Young	California State University, Sacramento (CSUS)	No
Chen, Jiamin	HUAWEI	Yes
Chen, Xiaogang	Intel Corporation	Yes
Cheong, Minho	Newracom Inc.	Yes
CHERIAN, GEORGE	Qualcomm Incorporated	Yes
Chitrakar, Rojan	Panasonic Asia Pacific Pte Ltd.	Yes
Cho, Hangyu	lg electronics	Yes
Choi, Jinsoo	LG ELECTRONICS	Yes
Chu, Liwen	Marvell Semiconductor, Inc.	Yes

Name	Affiliation	Attended >= 75%?
Ciochina, Dana	Sony Corporation	Yes
Coffey, John	Realtek Semiconductor Corp.	Yes
Cordeiro, Carlos	Intel Corporation	Yes
da Silva, Claudio	Intel Corporation	Yes
de Vegt, Rolf	Qualcomm Incorporated	Yes
Debergh, Pierre	Orange	Yes
Deshmukh, Nikhil	National Instruments Corporation	Yes
Dupuis, Marc	Web Industries	No
Eastlake 3rd, Donald	Huawei Technologies Co. Ltd	Yes
Ecclesine, Peter	Self	Yes
Eitan, Alecsander	Qualcomm Incorporated	Yes
Ekbal, Amal	National Instruments Corporation	No
ElSherif, Ahmed	Qualcomm Incorporated	Yes
Erceg, Vinko	Broadcom Corporation	Yes
Escalera, Natalia	Buffalo Inc.	Yes
Fang, Yonggang	ZTE TX Inc	Yes
farjad, ramin	Aquantia	No
Feng, Xiang	Keysight Technologies	Yes
Finn, Norman	Self Employed	No
Fischer, Matthew	Broadcom Corporation	Yes
Fischer, Michael	NXP Semiconductors	Yes
Furuichi, Sho	Sony Corporation	Yes
Gagiev, Yaroslav	Intel Corporation	Yes
Gan, Ming	Huawei Technologies Co. Ltd	Yes
Ghosh, Chittabrata	Intel Corporation	Yes
Gilb, James	Gilb Consulting, Inc.	No
Godfrey, Tim	Electric Power Research Institute, Inc. (EPRI)	No
GOTO, Fumihide	Self	Yes
Grigat, Michael	Deutsche Telekom AG	Yes
Guo, Qiang	Huawei R&D USA	Yes
Guo, Yuchen	Huawei Technologies Co. Ltd	Yes
Hall, Robert	Johnson Controls Inc	Yes
Hamilton, Mark	Ruckus Wireless	Yes
HAN, Xiao	Huawei Technologies Co. Ltd	Yes
Handte, Thomas	Sony Corporation	Yes
Hartman, Chris	Apple, Inc.	No
He, Linhai	Qualcomm Incorporated	Yes
he, shiwen	Southeast University, China	No

Name	Affiliation	Attended >= 75%?
Hedayat, Ahmadreza	Newracom Inc.	Yes
Hiertz, Guido	Ericsson AB	Yes
Ho, Duncan	Qualcomm Incorporated	Yes
Holcomb, Jay	Itron Inc.	No
Hong, Hanseul	Yonsei University	Yes
Horisaki, Koji	Toshiba	Yes
Hu, Chunyu	Broadcom Corporation	Yes
Huang, Lei	Panasonic Asia Pacific Pte Ltd.	No
Huang, Po-Kai	Intel Corporation	Yes
Huang, Rongsheng	MediaTek Inc.	Yes
Huang, Zhiyong	LitePoint Corporation/Teradyne	Yes
Hunter, David	WireFi Networks Inc.	Yes
Hwang, Sung Hyun	ETRI	Yes
Inoue, Yasuhiko	Nippon Telegraph and Telephone Corporation (NTT)	Yes
Ishizu, Kentaro	National Institute of Information and Communications Technology (NICT)	Yes
Iwatani, Junichi	Nippon Telegraph and Telephone Corporation (NTT)	Yes
Jacobs, Darnell	US Department of Defense	No
Jeffries, Timothy	Huawei R&D USA	Yes
JEONG, MIN SEOP	SAMSUNG ELECTRONICS	Yes
jiang, feng	Intel Corporation	Yes
Jin, Liang	Spirent Communications	Yes
Jo, Kyungtae	LG ELECTRONICS	Yes
Johnsson, Kerstin	Intel Corporation	No
Jones, Allan	Activision	Yes
Jones, Vincent Knowles IV	Qualcomm Incorporated	Yes
Kain, Carl	Noblis, Inc.	Yes
Kakani, Naveen	Qualcomm Incorporated	Yes
Kalke, Jerome	CBS Corp	No
Kang, Hyunduk	Electronics and Telecommunications Research Institute (ETRI)	Yes
Kapetanovic, Dzevdan	Ericsson AB	Yes
Kedem, Oren	Intel Corporation	Yes
Kennedy, Richard	Hewlett Packard Enterprise	No
Kerry, Stuart	OK-Brit	Yes
Khoury, Peter	Ruckus Wireless	Yes
Kim, Igor	Electronics and Telecommunications Research	Yes

Name	Affiliation	Attended >= 75%?
	Institute (ETRI)	
Kim, Jeongki	LG ELECTRONICS	Yes
Kim, Jin Min	LG ELECTRONICS	Yes
Kim, Joonsuk	Apple, Inc.	Yes
Kim, Kyeongpyo	Newracom Inc.	Yes
Kim, Sang Gook	LG ELECTRONICS	Yes
Kim, Suhwook	LG ELECTRONICS	Yes
Kim, Youhan	Qualcomm Incorporated	Yes
Kim, Youn Kwan	The Catholic University of Korea	No
Kim, Youn-Kwan	The Catholic University of Korea	Yes
Kim, Yunbae	Electronics and Telecommunications Research Institute (ETRI)	Yes
KNECKT, JARKKO	Apple, Inc.	Yes
Ko, Geonjung	WILUS Institute	Yes
Kojima, Fumihide	National Institute of Information and Communications Technology (NICT)	Yes
Kountz, Dennis	Chemours	Yes
Krieger, Ann	US Department of Defense	No
Kumar, Manish	Marvell Semiconductor, Inc.	Yes
Kumar, Rajesh	Qualcomm Incorporated	Yes
Kwon, Young Hoon	Newracom Inc.	Yes
Lalam, Massinissa	SAGEMCOM SAS	Yes
Lan, Zhou	National Institute of Information and Communications Technology (NICT)	Yes
Lanante, Leonardo	Kyushu Institute of Technology	Yes
Lansford, James	Qualcomm Incorporated	Yes
Le, Namtuan	Kookmin University	No
Lee, Hyeong Ho	Electronics and Telecommunications Research Institute (ETRI)	No
Lee, Jae Seung	ETRI	Yes
Lee, JiHo	Korea University	Yes
LEE, SUNGEUN	Cypress Semiconductor Corporation	Yes
Lepp, James	BlackBerry	Yes
Levy, Joseph	InterDigital, Inc.	Yes
Li, Dejian	Huawei Technologies Co. Ltd	Yes
Li, Jing	Huawei Technologies Co. Ltd	Yes
Li, Qinghua	Intel Corporation	Yes
Li, Yanchun	Huawei Technologies Co. Ltd	Yes
Li, Yunbo	Huawei Technologies Co. Ltd	Yes

Name	Affiliation	Attended >= 75%?
Liang, Haixiang	Huawei R&D USA	Yes
Lim, Byungju	Korea University	No
Lim, Dong Guk	LG ELECTRONICS	Yes
Lin, Yingpei	Huawei Technologies Co. Ltd	Yes
Lindskog, Erik	Qualcomm Incorporated	Yes
LIU, CHENCHEN	Huawei Technologies Co. Ltd	Yes
Liu, Jianhan	MediaTek Inc.	No
Liu, Jinnan	HUAWEI	Yes
Loc, Peter	Huawei Technologies Co. Ltd	Yes
Lomayev, Artyom	Intel Corporation	Yes
Lou, Hui-Ling	Marvell Semiconductor, Inc.	Yes
Lv, Kaiying	ZTE Corporation	Yes
Ma, Jing	National Institute of Information and Communications Technology (NICT)	Yes
MADHAVAN, NARENDAR	TOSHIBA Corporation	Yes
Malinen, Jouni	Qualcomm Incorporated	Yes
Maltsev, Alexander	Intel Corporation	Yes
Mano, Hiroshi	Koden Techno Info K.K.	Yes
Marks, Roger	EthAirNet Associates	No
Mccann, Stephen	BlackBerry	Yes
Merlin, Simone	Qualcomm Incorporated	Yes
Mody, Apurva	BAE Systems	No
Mohanty, Bibhu	Qualcomm Incorporated	Yes
Monajemi, Pooya	Cisco Systems, Inc.	No
Montemurro, Michael	Research In Motion Limited	Yes
Mori, Kenichi	Space-Time Engineering	Yes
Morioka, Yuichi	Sony Corporation	Yes
Motozuka, Hiroyuki	Panasonic Corporation	Yes
Mueller, Robert	Ilmenau University of Technology - TU Ilmenau	Yes
Murakami, Yutaka	Panasonic Corporation	Yes
Myles, Andrew	Cisco Systems, Inc.	Yes
Nandagopalan, SAI SHANKAR	Cypress Semiconductor Corporation	Yes
Nejatian, Alireza	Ericsson AB	No
Nezou, Patrice	Canon Research Centre France	Yes
Nguyen, Trang	Kookmin University	No
Noh, Yujin	Newracom Inc.	Yes
Notor, John	Notor Research; ARM, Inc.	Yes
Oh, Minseok	Kyonggi University	Yes

Name	Affiliation	Attended >= 75%?
OH, MIN-SEOK	LG Electronics	Yes
Okada, Hiraku	Nagoya University	Yes
Oteri, Oghenekome	InterDigital, Inc.	Yes
Ozaki, Kazuyuki	FUJITSU LABORATORIES LIMITED	Yes
Palm, Stephen	Broadcom Corporation	Yes
Pandey, Santosh Ghanshyam	Cisco Systems, Inc.	Yes
Park, Eunsung	LG Electronics	Yes
Park, Hyungu	Newracom Inc.	Yes
Park, Hyunhee	LG ELECTRONICS	Yes
Park, Minyoung	Intel Corporation	Yes
Park, Sung-jin	LG ELECTRONICS	Yes
Parsons, Glenn	Ericsson AB	No
Patil, Abhishek	Qualcomm Incorporated	Yes
Patkar, Raghavendra	National Instruments Corporation	Yes
Persson, Hakan	Ericsson AB	Yes
Petranovich, James	ViaSat, Inc.	Yes
petrick, Albert	Jones-Petrick and Associates, LLC.	Yes
Petrie, Richard	DisplayLink (UK) Ltd	No
Pienciak, Walter	IEEE	No
Polland, Joe	CommScope	No
porat, ron	Broadcom Corporation	Yes
Pulikkoonattu, Rethnakaran	Broadcom Corporation	Yes
Qiao, Dengyu	Huawei Technologies Co. Ltd	Yes
Qu, Shouxing	BlackBerry	Yes
Rabarijaona, Verotiana	National Institute of Information and Communications Technology (NICT)	Yes
Rakanovic, Demir	u-blox	No
Rantala, Enrico-Henrik	Nokia	Yes
Riegel, Maximilian	Nokia Networks	Yes
Rong, Zhigang	Huawei Technologies Co. Ltd	Yes
Rosdahl, Jon	Qualcomm Technologies, Inc.	Yes
Ryu, Kiseon	LG ELECTRONICS	Yes
Sadeghi, Bahareh	Intel Corporation	Yes
Sampath, Hemanth	Qualcomm Incorporated	Yes
Sato, Naotaka	Sony Corporation	Yes
Schelstraete, Sigurd	Quantenna Communications, Inc.	Yes
Scott, Andy	NCTA	Yes
Seaman, Michael	CONSULTANT	No

Name	Affiliation	Attended >= 75%?
Segev, Jonathan	Intel Corporation	Yes
Seminario, Max	ADVANTEST	Yes
Seok, Yongho	Newracom Inc.	Yes
Serafimovski, Nikola	pureLiFi	Yes
Shah, Kunal	Silver Spring Networks Inc.	Yes
Shellhammer, Stephen	Qualcomm Incorporated	No
Sherlock, Ian	Texas Instruments Incorporated	Yes
Shimada, Shusaku	Schubiquist Technologies	No
Slaats, Patrick	IEEE-SA	No
Smith, Graham	SR Technologies	Yes
Son, Ju-Hyung	WILUS Institute	Yes
Srinivasa, Sudhir	Marvell Semiconductor, Inc.	Yes
Stacey, Robert	Intel Corporation	Yes
Stanley, Dorothy	Hewlett Packard Enterprise	Yes
Stephens, Adrian	Intel Corporation	Yes
Stott, Noel	Ixia	Yes
Strickland, Stuart	Hewlett Packard Enterprise	No
Suh, JUNG HOON	Huawei Technologies Co. Ltd	Yes
Sumi, Takenori	Mitsubishi Electric Corporation	Yes
Sun, Bo	ZTE Corporation	No
Sun, Chen	Sony Corporation	Yes
Sun, Li-Hsiang	InterDigital, Inc.	Yes
sun, sheng	Huawei Technologies Co. Ltd	Yes
Sun, Yanjun	Qualcomm Incorporated	Yes
Takahashi, Kazuaki	Panasonic Corporation	Yes
Takai, Mineo	Space-Time Engineering	Yes
Tamhane, Sagar	Marvell Semiconductor, Inc.	Yes
Tao, Wu	Huawei Technologies Co. Ltd	Yes
Tian, Bin	Qualcomm Incorporated	Yes
Tian, Qingjiang	Qualcomm Incorporated	Yes
Torab, Payam	Broadcom Corporation	Yes
Torkildson, Eric	Nokia	Yes
Tsonev, Dobroslav	pureLiFi	Yes
Urabe, Yoshio	Panasonic Corporation	Yes
Vaden, Sterling	Surtec	No
Vanthournout, Jerome	CEVA-DSP	Yes
Varshney, Prabodh	Nokia	Yes
Venkatesan, Ganesh	Intel Corporation	Yes

Name	Affiliation	Attended >= 75%?
Venkateswaran, Sriram	Broadcom Corporation	Yes
Vermani, Sameer	Qualcomm Incorporated	Yes
Vlantis, George	STMicroelectronics	Yes
Wang, Chao Chun	MediaTek Inc.	Yes
Wang, Haiming	Southeast University, China	Yes
Wang, Hao	Fujitsu Research & Development Center	No
Wang, Huizhao	Quantenna Communications, Inc.	Yes
Wang, James June	MediaTek Inc.	Yes
Wang, Lei	Huawei R&D USA	Yes
Wang, Qi	Broadcom Corporation	Yes
Wang, Xiaofei	InterDigital, Inc.	Yes
Wang, Xuehuan	Huawei Technologies Co. Ltd	Yes
Want, Roy	Google	Yes
Ward, Lisa	Rohde & Schwarz	Yes
Webber, Julian	Advanced Telecommunications Research Institute International (ATR)	Yes
Weis, Brian	Cisco Systems, Inc.	No
Wentink, Menzo	Qualcomm Incorporated	Yes
Wilhelmsson, Leif	Ericsson AB	Yes
Wong, Eric	Apple, Inc.	Yes
Wu, Tianyu	MediaTek Inc.	Yes
Xin, Yan	Huawei Technologies Co. Ltd	Yes
Xue, Qi	Qualcomm Incorporated	Yes
YAGHOOBI, HASSAN	Intel Corporation	Yes
Yang, Ou	Intel Corporation	Yes
YANG, RUI	InterDigital, Inc.	Yes
Yang, Xun	Huawei Technologies Co. Ltd	Yes
Yang, Yunsong	Huawei Technologies Co. Ltd	Yes
Yano, Kazuto	Advanced Telecommunications Research Institute International (ATR)	Yes
YAO, KE	ZTE Corporation	Yes
Yee, James	MediaTek Inc.	Yes
Yee, Peter	NSA/IAD	Yes
Yokota, Hidetoshi	Landis Gyr Group Worldwide	Yes
Yong, Su Khiong	Apple, Inc.	Yes
Yu, Heejung	Yeungnam University	Yes
Yu, Jian	Huawei Technologies Co. Ltd	Yes
Yu, Mao	Marvell Semiconductor, Inc.	Yes

Name	Affiliation	Attended >= 75%?
Zein, Nader	NEC	No
Zeleznikar, Alan	ARRIS Group	Yes
Zeng, Kun	Huawei Technologies Co. Ltd	Yes
Zhang, Hongyuan	Marvell Semiconductor, Inc.	Yes
ZHANG, JIAYIN	Huawei Technologies Co. Ltd	Yes
Zhang, Xingxin	Huawei Technologies Co. Ltd	Yes
Zhou, Yan	Qualcomm Incorporated	Yes
Zhu, Chunhui	Huawei Technologies Co. Ltd	Yes
Zimmerman, George	CME Consulting	No
Zuniga, Juan Carlos	SIGFOX	No

Annex B : Working Group Officers

Working group

Name (Affiliation)	Position	Contact Details
Adrian Stephens (Intel Corporation UK Ltd.)	IEEE 802.11 Working Group Chair	+44 1793 404825 (office) adrian.p.stephens@ieee.org
Jon Rosdahl (Qualcomm)	1st Vice Chair (Venues and meeting planning) Treasurer	+1 (801) 492-4023 jrosdahl@ieee.org
Dorothy V. Stanley (HPE)	2nd Vice Chair (Rules and reflectors) IEEE 802 (LMSC) EC delegate	+1 (630) 363-1389 dorothy.stanley@hpe.com
Stephen McCann (BlackBerry Ltd.)	Secretary	+44 1753 667099 stephen.mccann@ieee.org
Peter Ecclesine (Cisco Systems, Inc.)	Co-Technical Editor	+1 (408) 527-0815 petere@cisco.com
Robert Stacey (Intel Corporation)	Co-Technical Editor 802.11 Assigned Numbers Authority	+1 (503) 712 4447 robert.stacey@intel.com

Standing Committees

Name (Affiliation)	Position	Contact Details
Jim Lansford (Qualcomm)	Wireless Next Generation Chair (WNG)	+1 (719) 286-8660 jim.lansford@ieee.org
Joseph Levy (InterDigital Communications Inc.)	Advanced Access Network Interface (AANI) Chair	+1.631.622.4139 jslevy@ieee.org
Mark Hamilton (Ruckus Wireless)	Architecture Chair (ARC)	+1 (303) 818-8472 mark.hamilton2152@gmail.com
Andrew Myles (Cisco Systems, Inc.)	ISO/IEC/JTC1/SC6 shadow committee (JTC1) Chair	+61 2 84461010 andrew.myles@cisco.com
Rich Kennedy (HPE)	Regulatory Chair (REG)	+1 (832) 298-1114 rkennedy1000@gmail.com
Jon Rosdahl (Qualcomm)	PAR Review SC Chair	+1 (801) 492-4023 jrosdahl@ieee.org

Task Groups

Name (Affiliation)	Position	Contact Details
Dorothy V. Stanley (HPE)	TGmc Chair (Revision mc)	+1 (630) 363-1389 dorothy.stanley@hpe.com
Yongho Seok (Newracom Inc)	TGah Chair (Sub 1 GHz Operation)	+82-10-7581-0828 yongho.seok@gmail.com
Hiroshi Mano (Koden Techno Info K.K.)	TGai Chair (Fast Initial Link Setup)	+81-3-5436-8350 mano@koden-ti.com
Jiamin Chen (HiSilicon/Huawei Technologies)	TGaj Chair (China Millimeter Wave)	+86-10-8282-9532 jiamin.chen@mail01.huawei.com
Donald Eastlake, 3rd (Huawei Technologies)	TGak Chair (General Link)	+1 (508) 333-2270 d3e3e3@gmail.com
Stephen McCann (Blackberry Ltd.)	TGaq Chair (Pre-association Discovery)	+44 1753 667099 stephen.mccann@ieee.org
Osama Aboul-Magd (Huawei)	TGax Chair (High Efficiency WLAN)	+1 (613) 287-1405 osama.aboulmagd@huawei.com
Edward Au (Marvell Semiconductor)	TGay Chair (Next Generation 60GHz)	+1 (773) 782 6875 edwardau@marvell.com
Jonathan Segev (Intel Corporation)	TGaz Chair (Next Generation Positioning)	+972-54-2403587 jonathan.segev@intel.com

Study Groups

Name (Affiliation)	Position	Contact Details
Minyoung Park (Intel Corporation)	Wake-up Radio Study Group Chair (WUR SG)	+1 (503) 712-4705 minyoung.park@intel.com

Topic Interest Groups (TIGs)

Name (Affiliation)	Position	Contact Details

Liaison Officials to non IEEE-802 organizations

Name (Affiliation)	Position	Contact Details
Stephen McCann (BlackBerry Ltd.)	Liaison to 3GPP (3rd Generation Partnership Project)	+44 1753 667099 stephen.mccann@ieee.org
Dorothy V. Stanley	Liaison to IETF	+1 (630) 363-1389

(HPE)	(Internet Engineering Task Force)	dorothy.stanley@hpe.com
Ian Sherlock (Texas Instruments Inc.)	Liaison to WFA (Wi-Fi Alliance)	+1 (972) 995-2011 isherlock@ieee.org

Liaison Officials to IEEE-802 organizations

Name (Affiliation)	**Position**	**Contact Details**
Clint Chaplin (Samsung Electronics)	Liaison to IEEE 802.15	+1 (408) 768-0827 clint.chaplin@gmail.com
Rich Kennedy (HPE)	Liaison to IEEE 802.18	+1 (832) 298-1114 rkennedy1000@gmail.com
Tim Godfrey (Electric Power Research Institute)	Liaison to IEEE 802.24	+1 (650) 855-8584 (office) tim.godfrey@ieee.org

Annex C : Minutes

This Annex contains references to all IEEE 802.11 SC/TG/SG minutes from this meeting. Please note that they are NOT subject to the approval of these minutes, but are confirmed and approved by their individual group in the opening meeting at their next session.

WG	TE	16-1386r1
TGAJ	TG	16-1555r0
TGAK	TG	16-1489r1
TGAQ	TG	16-1474r0
TGAX	TG	16-1466r0
TGAY	TG	16-1556r0
TGAZ	TG	16-1563r2
WUR	SG	16-1557r0
ARC	SC	16-xxxxr0
WNG	SC	16-1515r0
JTC1	SC	16-xxxxr0
REG	SC	16-xxxxr0
PAR Review	SC	16-1486r0
AANI	SC	16-1576r0
PDED	Ad-Hoc	16-1564r1

End

APPENDIX CG

Internet Architecture Board (IAB)
Request for Comments: 7241
Obsoletes: 4441
Category: Informational
ISSN: 2070-1721

S. Dawkins
Huawei
P. Thaler
Broadcom
D. Romascanu
AVAYA
B. Aboba, Ed.
Microsoft Corporation
July 2014

The IEEE 802/IETF Relationship

Abstract

This document describes the standardization cooperation between Project 802 of the Institute of Electrical and Electronics Engineers (IEEE) and the Internet Engineering Task Force (IETF). This document obsoletes RFC 4441.

Note: This document was collaboratively developed by authors from both the IEEE 802 and IETF leadership and was reviewed and approved by the IEEE 802 Executive Committee prior to publication.

Status of This Memo

This document is not an Internet Standards Track specification; it is published for informational purposes.

This document is a product of the Internet Architecture Board (IAB) and represents information that the IAB has deemed valuable to provide for permanent record. It represents the consensus of the Internet Architecture Board (IAB). Documents approved for publication by the IAB are not a candidate for any level of Internet Standard; see Section 2 of RFC 5741.

Information about the current status of this document, any errata, and how to provide feedback on it may be obtained at http://www.rfc-editor.org/info/rfc7241.

Copyright Notice

Copyright (c) 2014 IETF Trust and the persons identified as the document authors. All rights reserved.

This document is subject to BCP 78 and the IETF Trust's Legal Provisions Relating to IETF Documents (http://trustee.ietf.org/license-info) in effect on the date of publication of this document. Please review these documents carefully, as they describe your rights and restrictions with respect to this document.

Table of Contents

1. Introduction 4
   1.1. Why Cooperate? 4
2. Organization, Participation, and Membership 4
   2.1. IEEE 802 5
   2.2. IETF 7
   2.3. Structural Differences 8
   2.4. Cultural Differences 9
   2.5. Mailing Lists 11
3. Document Access and Cross-Referencing 12
   3.1. Access to IETF Documents 12
   3.2. Access to IEEE 802 Standards 12
   3.3. Access to IEEE 802 Working Group Drafts 12
   3.4. Cross-Referencing 15
4. Guidance on Cooperation 16
   4.1. Exchange of Information about Work Items 16
   4.2. Document Review and Approval 20
   4.3. Solicited Review Processes 23
5. Liaison Managers and Liaison Statements 23
   5.1. Liaison Managers 24
   5.2. Liaison Statements 24
6. Protocol Parameter Allocation 24
   6.1. IANA 24
   6.2. IEEE Registration Authority 25
   6.3. IEEE 802 Registration at the Working Group Level 26
   6.4. Joint-Use Registries 26
7. Security Considerations 26
8. References 26
   8.1. Normative References 26
   8.2. Informative References 26
9. Acknowledgments 30
10. IAB Members at the Time of Approval 31
11. IEEE 802 Executive Committee Members at the Time of Approval ..31
Appendix A. Current Examples of IEEE 802 and IETF Cooperation 32
  A.1. MIB Review 32
  A.2. AAA Review 32
  A.3 EAP Review 33
Appendix B. Pointers to Additional Information 34
  B.1. IEEE 802 Information 34
  B.2. IETF Information 34

1. Introduction

This document contains a set of principles and guidelines that serve as the basis for coordination between Project 802 of the Institute of Electrical and Electronics Engineers (IEEE 802) and the Internet Engineering Task Force (IETF), a program under the Internet Society (ISOC) organizational umbrella [BCP101]. The objective is to encourage timely development of technical specifications that facilitate maximum interoperability with existing (fixed and mobile) Internet systems, devices, and protocols. Each organization will operate according to their own rules and procedures including rules governing IPR policy, specification elaboration, approval, and maintenance.

While this document is intended to improve cooperation between the two organizations, it does not change any of the formal practices or procedures of either organization.

1.1. Why Cooperate?

IEEE 802 and the IETF are independent standards organizations that each use standards produced by the other organization and develop standards dependent on those produced by the other organization. This dependency may extend to carrying attributes in protocols that reflect technologies defined by the other organization.

The dependencies between IEEE 802 and IETF standards are a motivation for cooperation between the organizations. However, since the benefits of cooperation come at the cost of coordination overhead, the benefits of coordination must outweigh the cost.

The IETF benefits from coordination by obtaining improved access to IEEE 802 expertise in the widely deployed and widely used IEEE 802 Local Area Network architecture [ARCH802].

IEEE 802 benefits from coordination by obtaining improved access to IETF expertise on IP datagram encapsulation, routing, transport, and security, as well as specific applications of interest to IEEE 802.

2. Organization, Participation, and Membership

IEEE 802 and IETF are similar in some ways but different in others. When working on projects of interest to both organizations, it is important to understand the similarities and differences.

2.1. IEEE 802

The IEEE Standards Association (IEEE-SA) is the standards-setting body of the IEEE. The IEEE-SA Standards Board oversees the IEEE standards development process.

The IEEE-SA Standards Board supervises what IEEE calls "sponsors" -- IEEE entities that develop standards. The IEEE 802 LAN/MAN Standards Committee is a sponsor that develops and maintains networking standards and recommended practices for local, metropolitan, and other area networks, using an open and accredited process, while advocating for them on a global basis. Areas of standardization work include Ethernet, Bridging and Virtual Bridged LANs, Wireless LAN (Local Area Network), Wireless PAN (Personal Area Network), Wireless MAN (Metropolitan Area Network), Wireless Coexistence, Media Independent Handover Services, and Wireless RAN (Regional Access Network). Within IEEE 802, a Working Group provides the focus for each of these areas.

In IEEE 802, work is done in Working Groups operating under an Executive Committee. Each Working Group is led by a Working Group Chair. Most Working Groups have one or more Task Groups. A Task Group is responsible for a project or group of projects.

The Executive Committee is comprised of the Executive Committee Chair, Executive Committee Officers (e.g., Vice-Chairs, Secretaries, Treasurer), and Working Group Chairs.

A good place to learn more is the IEEE 802 Home Page, at <http://www.ieee802.org/>. An IEEE 802 Orientation for new participants that gives an overview of IEEE 802 process is available from the home page.

The IEEE 802 Executive Committee and all Working Groups meet three times per year at plenary sessions. Plenary sessions are held in March, July, and November. Most Working Groups hold interim meetings, usually in January, May, and September. The meeting schedule can be found at <http://www.ieee802.org/meeting/index.html>.

A Study Group is a group formed to consider starting a new project and, if new work is found to be suitable, to develop an IEEE Project Authorization Request (PAR), similar in purpose to an IETF Working Group charter. A Study Group may operate under a Working Group or under the Executive Committee depending on whether the new work under consideration falls within the scope of an existing Working Group. Study Groups are expected to exist for a limited time, usually for one or two plenary cycles, and must be authorized to continue at each plenary if they have not completed their work.

Participation in IEEE 802 Working Groups is at the level of individuals -- participants are human beings and not companies. While participation is open, individuals are required to declare their affiliation (i.e., any individual or entity that financially or materially supports the individual's participation in IEEE 802).

Working Groups maintain membership rosters, with voting membership attained on the basis of in-person meeting attendance. Retention of voting membership generally requires continued attendance and responsiveness to letter ballots. Voting membership allows one to vote on motions and on Working Group Ballots of drafts. All drafts are also balloted by a Sponsor ballot pool before approval as standards. Joining a Sponsor ballot pool does not require participation in meetings. It is not necessary to be eligible to vote in order to comment on drafts, and the Working Group is required to consider and respond to all comments submitted during Working Group and Sponsor ballots.

To foster ongoing communication between IEEE 802 and IETF, it is important to identify and establish contact points within each organization. IEEE 802 contact points may include:

IEEE 802 Working Group Chair: An IEEE 802 Working Group chair is an individual who is assigned to lead the work of IEEE 802 in a particular area. IEEE 802 Working Group chairs are elected by the Working Group and confirmed by the Executive Committee for a two-year term. The Working Group Chair provides a stable contact point for cooperation between the two organizations for a given topic.

IEEE 802 Task Group (or Task Force) Chair: An IEEE 802 Task Group chair is an individual who is assigned to lead the work on a specific project or group of projects within a Working Group. The Task Group Chair often serves for the duration of a project. The Task Group Chair provides a stable contact point for cooperation between the two organizations on a particular project.

IEEE 802 Study Group Chair: An IEEE 802 Study Group Chair is an individual assigned to lead consideration of new work and development of an IEEE 802 Project Authorization Request (PAR). The Study Group chair provides a stable contact point for cooperation between the two organizations on a study group topic.

IEEE 802 Liaisons: It may be beneficial to establish liaisons as additional contact points for specific topics of mutual interest. These contact points should be established early in the work effort. The IEEE 802 and IETF projects may select the same individual as their contact point, but this is not required, so that two individuals each serve as contact points for one project participating in the liaison relationship.

Informal Contact points: Other informal contacts can provide useful cooperation points. These include Project Editors who are responsible for editing the drafts and work with the Task Group Chairs to lead tracking and resolution of issues. Joint members who are active in both the IEEE 802 and IETF projects in an area can also aid in cooperation.

2.2. IETF

The IETF Standards Process is defined in [BCP9]. [BCP11] is a helpful description of organizations involved in the IETF standards process. It can still be useful as an overview, although details have changed since 1996.

In the IETF, work is done in Working Groups (WGs) and is mostly carried out through open, public mailing lists rather than face-to-face meetings. The IETF Working Group process is defined in [BCP25].

WGs are organized into areas, and each area is managed by one or more Area Directors. Collectively, the Area Directors constitute the Internet Engineering Steering Group (IESG) [RFC3710].

To foster ongoing communication between IEEE 802 and IETF, it is important to identify and establish contact points within each organization. IETF contact points may include Area Directors, Working Group chairs, and other points of contact who can help communicate between IEEE 802 and IETF Working Groups.

The Internet Architecture Board (IAB) charter [BCP39] assigns the IAB several responsibilities relevant to this document:

1. IESG Appointment Confirmation [BCP10]
2. Architectural Oversight
3. Standards Process Oversight and Appeal
4. Appointment of the RFC Series Editor [RFC6635] and Independent Submission Editor [RFC6548]
5. Appointment of the Internet Assigned Number Authority (IANA) operator [RFC6220]
6. Oversight of External Liaisons for the IETF [BCP102]

IESG and IAB members are selected using the NomCom process defined in [BCP10]. Working Group chairs serve at the pleasure of their Area Directors, as described in [BCP25].

The IETF is designed to be a "bottom-up" protocol engineering organization -- the leadership steers and manages but does not direct work in a top-down way. Technical agreements with "the IETF" are based on the consensus of Working Group participants, rather than negotiated with IETF leadership.

IETF meets in plenary sessions three times per year. Some Working Groups schedule additional interim meetings, which may be either face-to-face or "virtual". Information about IETF meetings is available at <http://www.ietf.org/meeting/upcoming.html>. Information about IETF Working Group interim meetings is available on <http://www.ietf.org/meeting/interim-meetings.html>.

The preferred way to develop specifications is to do work on mailing lists, reserving face-to-face sessions for topics that have not been resolved through previous mailing list discussion.

Participation in the IETF is open to anyone (technically, anyone with access to email sufficient to allow subscription to one or more IETF mailing lists). All IETF participants act as individuals. There is no concept of "IETF membership".

A good place to learn more is the IETF Home Page, at <http://www.ietf.org/>, and especially the "About the IETF" page at <http://www.ietf.org/about>, selectable from the IETF Home Page.

The "Tao of the IETF" is also very helpful, especially for IEEE 802 participants who will also be participating in IETF Working Groups and attending IETF meetings. It is available at <http://www.ietf.org/tao.html>.

The current list of IETF Area Directors and Working Group chairs can be found in the IETF Working Group charters, at <http://datatracker.ietf.org/wg/>.

2.3. Structural Differences

IEEE 802 and IETF have similar structures, but the terms they use are different, and even conflicting. For example, both IEEE 802 and IETF use the term "Working Group", but this means very different things in the two organizations.

Thumbnail comparison between IETF and IEEE 802 entities

IETF Area	is similar to	IEEE 802 Working Group
IETF Working Group	is similar to	IEEE 802 Task Group
IETF BOF	is similar to	IEEE 802 Study Group

Both IEEE 802 Working Groups and IETF Areas are large, long-lived, and relatively broadly scoped, containing more narrowly chartered entities (IEEE 802 Task Groups and IETF Working Groups), which tend to be short-lived and narrowly chartered. IEEE 802 uses Study Groups to develop proposals for new work, and these are analogous to IETF Birds of a Feather ("BOF") sessions.

Several IETF Areas also have one or more directorates to support the work of the Area Directors. Area Directors often ask directorate members to review documents or provide input on technical questions. These directorates are often a source of expertise on specific topics. The list of Area Directorates is at <http://www.ietf.org/iesg/directorate.html>. IEEE 802 does not have a corresponding organizational entity.

2.4. Cultural Differences

IEEE 802 and IETF have cultures that are similar but not identical. Some of the differences include:

Consensus and Rough Consensus: Both organizations make decisions based on consensus, but in the IETF, "consensus" can mean "rough consensus, as determined by Working Group chairs". In practice, this means that a large part of the community being asked needs to agree. Not everyone has to agree, but if someone disagrees, they need to convince other people of their point of view. If they’re not able to do that, they’ll be "in the rough" when "rough consensus" is declared. Although IEEE Working Groups ultimately rely on voting for decision-making, they vary widely in their use of consensus versus voting in the course of a meeting and in their attention to Robert’s Rules [RONR].

Running Code: David Clark coined the phrase "We reject kings, presidents and voting. We believe in rough consensus and running code" in 1992, to explain IETF culture. Although that’s not always true today, the existence of "running code" as a proof of feasibility for a proposal often carries weight during technical discussions. IEEE 802 considers both technical and economic feasibility when deciding whether to approve new work, as noted in Section 4.1.7.

Decision-making: IEEE 802 Working Groups vary in their reliance upon voting versus consensus, and in the breadth of coverage of an individual motion, but ultimately, all rely upon a 75 percent vote to decide technical issues, and a 50 percent +1 vote to decide other issues. IETF Working Groups do not use voting. Working Group chairs may ask for a "show of hands" or "take a hum" to judge backing for a proposal and identify technical concerns and objections, but this is not considered "voting". IETF consensus and humming is discussed further in [RFC7282].

Balance between mailing lists and meetings: Both organizations make use of mailing lists. IETF Working Groups rely heavily on mailing lists, where work is done, in addition to formal meetings. The IETF requires all Working Group decisions to be made (or, often in practice, confirmed) on mailing lists -- final decisions aren’t made in meetings. IEEE 802 Working Groups typically meet face-to-face about twice as often as IETF Working Groups (three IEEE 802 plenaries plus three IETF 802 interim meetings each year, compared to three IETF plenaries per year), and teleconferences are more common in IEEE 802 than in most IETF Working Groups. Most major decisions in IEEE 802 are made during plenary or interim meetings, except for procedural decisions. Attendance at meetings is critical to influencing decisions and to maintaining membership voting rights.

Interim meetings: Both organizations use interim meetings (between plenary meetings). IETF Working Groups schedule interim meetings on an as-needed basis. IETF interim meetings may be face-to-face or virtual. Most IEEE 802 WGs hold regularly interim meetings three times a year in the middle of the interval between two plenary meetings. The schedules and locations of these meetings are typically known many months in advance. IEEE 802 interim meetings are face-to-face only. In addition to regularly scheduled IEEE 802 interim meetings, teleconference and ad hoc meetings are held on an as-needed basis.

Remote participation: Because the IETF doesn’t make decisions at face-to-face meetings, attendance is not absolutely necessary, and some significant contributors do not attend most face-to-face IETF meetings. However, finding people interested in a proposal for new work, or soliciting backing for ideas, is often more easily accomplished face-to-face, such as in a hallway or bar. Significant contributors to IEEE 802 almost always attend face-to-face meetings; participation in IEEE 802 meetings is a condition for WG membership.

Lifetime of Standards: IEEE 802 periodically reviews existing standards. IETF Standards Track documents may be updated or obsoleted by newer Standards Track documents, but there is no formal periodic review for existing Standards Track documents. The status of specific IETF standards is available through the IETF "Datatracker" [DATATRACKER]. Because these status changes happen independently, standards from each organization may refer to documents that are no longer standards in the other organization.

Overlapping terminology: As two independent standards development organizations, IEEE 802 and IETF have developed vocabularies that overlap. For instance, IEEE 802 "ballots" at several levels of the organization during document approval, while IETF documents are only "balloted" during IESG review. The IESG uses "ballots" to indicate that all technical concerns have been addressed, not to indicate that the IESG agrees with a document. The intention is to "discuss" technical issues with a document, and "no" is not one of the choices on an IESG ballot.

2.5. Mailing Lists

All IETF Working Groups and all IEEE 802 Working Groups have associated mailing lists. Most IEEE 802 Task Groups also have mailing lists, but in some cases (e.g., the IEEE 802.1 Working Group), the Working Group mailing list is used for any Task Group matters.

In the IETF, the mailing list is the primary vehicle for discussion and decision-making. It is recommended that IEEE 802 experts interested in particular IETF Working Group topics subscribe to and participate in these lists. IETF WG mailing lists are open to all subscribers. The IETF Working Group mailing list subscription and archive information are noted in each Working Group’s charter page.

In IEEE 802, mailing lists are typically used for meeting logistics, ballot announcements, reports, and some technical discussion. Most decision-making is at meetings, but in cases where a decision is needed between meetings, it may be done over the mailing list. Most technical discussion occurs at meetings and by generating comments on drafts that are compiled with responses in comment resolution documents.

Most IEEE 802 mailing lists are open to all subscribers. For the few IEEE 802 mailing lists that are not open, please see the Working Group chair to arrange for access to the mailing list.

Some IEEE 802 participants refer to mailing lists as "reflectors".

3. Document Access and Cross-Referencing

During the course of IEEE 802 and IETF cooperation, it is important to share internal documents among the technical Working Groups. In addition, drafts of IEEE 802 standards, Internet-Drafts, and RFCs may also be distributed.

3.1. Access to IETF Documents

IETF Internet-Drafts may be located using the IETF Datatracker interface (see [DATATRACKER]) or via the IETF tools site at <http://tools.ietf.org>. RFCs may be found at either of the above sites, or via the RFC Editor web site at <http://www.rfc-editor.org>.

3.2. Access to IEEE 802 Standards

IEEE 802 standards, once approved, are published and made available for sale. They can be purchased from the IEEE Standards Store, at <http://www.techstreet.com/IEEEgate.html>. They are also available from other outlets, including the IEEE Xplore digital library, at <http://ieeexplore.ieee.org>.

The Get IEEE 802 program, at <http://standards.ieee.org/about/get>, grants public access to download individual IEEE 802 standards at no charge (although registration is required). IEEE 802 standards are added to the Get IEEE 802 program six months after publication. This program is approved year by year, but has been in place for several years.

3.3. Access to IEEE 802 Working Group Drafts

The IEEE owns the copyright to drafts of standards developed within IEEE 802 standardization projects. The IEEE-SA grants permission for an IEEE 802 draft to be distributed without charge to the participants for that IEEE 802 standards development project. Typically, access is provided over the Internet under password protection, with the password provided to members of the participating WG. Requests to the relevant WG Chair for access to a draft for purposes of participation in the project are typically granted.

An alternative access mechanism which may more easily enable document access for IETF WGs cooperating with IEEE 802 was established by a liaison statement sent to the IETF in July 2004 by Paul Nikolich, Chair of IEEE 802 (available at <https://datatracker.ietf.org/documents/LIAISON/file41.pdf>), describing the process by which IETF WGs can obtain access to IEEE 802 work in progress. IEEE 802 WG Chairs have the authority to grant membership in their WGs and can use this authority to grant membership to an IETF WG chair upon request. The IETF WG chair will be provided with access to the username/password for the IEEE 802 WG archives and is permitted to share that information with participants in the IETF WG. Since it is possible to participate in IETF without attending meetings, or even joining a mailing list, IETF WG chairs will provide the information to anyone who requests it. However, since IEEE 802 work in progress is copyrighted, copyright restrictions prohibit incorporating material into IETF documents or postings.

In addition to allowing IETF participants to access documentation resources within IEEE 802, IEEE 802 can also make selected IEEE 802 documents at any stage of development available to the IETF by attaching them to a formal liaison statement. Although a communication can point to a URL where a non-ASCII document can be downloaded, sending attachments in proprietary formats to an IETF mailing list is discouraged.

3.3.1. IEEE 802 Documentation System

Each IEEE 802 standardization project is assigned to a Working Group (WG) for development. In IEEE 802, the working methods of the WGs vary in their details. The documentation system is one area in which WG operations differ, based on varying needs and traditions. In some cases, the WGs assign the core development to a subgroup (typically known as a Task Group or Task Force), and the documentation procedures may vary among the subgroups as well. Prior to project authorization, or on topics not directly related to development of a standard, the WG may consider and develop documents itself or using other subgroups (standing committees, ad hocs, etc.).

IEEE 802 also supports Technical Advisory Groups (TAGs) that conduct business and develop documents, although not standards. References here to WGs apply to TAGs as well.

3.3.2. Access to Internal IEEE 802 Working Group Documents

Generally, the archives of minutes and contributions to IEEE 802 groups are publicly and freely available.

Many IEEE 802 groups use a documentation system provided by IEEE and known as "Mentor". The list of these groups is available at the IEEE 802 Mentor Home Page: <https://mentor.ieee.org/802>. Mentor provides the following features:

1. The documentation system is structured and ordered, with documentation tags and unique numbering and versioning.

2. Online documentation is available.

3. Limited search functionality is provided, and publicly available search engines index the data.

4. The ability to submit documents to Mentor is limited but is generally available to any interested party. An IEEE web account is required but can be easily and freely established using the IEEE Account Request page, at <http://www.ieee.org/go/create_web_account>. If submission is protected, the privilege can be requested via the Mentor system (using the "Join group" link on each WG Mentor page) and would typically be granted by the WG documentation manager in a manual approval.

5. Submitted documents are immediately available to the general public at the same instant they become available for consideration by the group.

IEEE 802.1 and IEEE 802.3 do not use Mentor.

IEEE 802.1 documents are organized in folders by year at <http://www.ieee802.org/1/files/public/>. The file names indicate the relevant project, author, date, and version. The file-naming conventions and upload link are at <http://www.ieee802.org/1/filenaming.html>. Upload is moderated.

IEEE 802.3 documents are accessed from the home pages of the IEEE 802.3 subgroups (i.e., Task Force or Study Group) and are organized in folders by meeting date. These home pages are available from the IEEE 802.3 home page, at <http://www.ieee802.org/3/>. Files are uploaded by emailing to the subgroup chair.

3.3.3. Contributions to IEEE 802 Working Groups

In general, development of standards in IEEE 802 is contribution driven. In many cases, a WG or subgroup will issue a call for contributions with a specific technical solicitation, including deadlines and submission instructions. Some groups maintain specific submission procedures and specify a contribution cover sheet to clarify the status of the contribution.

Content for drafts of standards is submitted to WGs by individual participants or groups of participants. Content toward other group documents (such as, for example, external communication statements or foundation documents underlying a draft of a standard) might also be contribution driven. At some point, the group assembles contributed material to develop group documents, and revision takes place within group meetings or by assignment to Editors. For the most part, the contributions toward discussion as well as the group documents (including minutes and other reports) are openly available to the public.

3.4. Cross-Referencing

IETF and IEEE 802 each recognize the standards defined by the other organization. Standards produced by each organization can be used as references in standards produced by the other organization.

IETF specifications may reference IEEE 802 work in progress, but these references should be labeled "Work in Progress". If the references are normative, this will block publication of the referring specification until the reference is available in a stable form.

IEEE 802 standards may normatively reference non-expired Internet-Drafts, but IEEE 802 prefers that this be avoided if at all possible.

Informative references in IEEE 802 standards are placed in a bibliography, so they may point to either approved IETF standards or IETF Internet-Drafts, if necessary.

When an IEEE 802 standard is revised, it normally retains the same number and the date is updated. Therefore, IEEE 802 standards are dated with the year of approval, e.g., IEEE Std 802.1Q(TM)-2011. There are two ways of referencing IEEE 802 standards: undated and dated references. IEEE 802 practice allows undated reference to be used when referencing a whole standard. An undated reference indicates that the most recent version of the standard should be used. A dated reference refers to a specific revision of an IEEE 802 standard. Since clauses, subclauses, tables, figures, etc., may be

renumbered when a standard is revised, a dated reference should be used when citing specific items in a standard.

IETF standards may be cited by RFC number, which would also be a dated reference. If an undated reference to an IETF Internet Standard is desired, a number is also assigned in the "STD" series [BCP9], and these references refer to the most recent version of an IETF Internet Standard.

4. Guidance on Cooperation

This section describes how existing processes within the IETF and IEEE 802 may be used to enable cooperation between the organizations.

Historically, much of the work of coordination has fallen on individuals attending meetings of both organizations. However, as noted in "Transferring MIB Work from IETF Bridge MIB WG to IEEE 802.1 WG" [RFC4663], downward pressure on travel budgets has made it increasingly difficult for participants to attend face-to-face meetings in both organizations. That pressure has continued in the intervening years. As a result, the coordination mechanisms described in this section typically do not require meeting attendance.

4.1. Exchange of Information about Work Items

The following sections outline a process that can be used to enable each organization to stay informed about the other’s active and proposed work items.

Early identification of topics of mutual interest allows the two organizations to cooperate in a productive way and helps each organization avoid developing specifications that overlap or conflict with specifications developed in the other organization. Where individuals notice a potential conflict or need for coordination, the issue should be brought to the attention of the relevant Working Group chairs and/or Area Directors.

4.1.1. How IEEE 802 Is Informed about Active IETF Work Items

The responsibility is on IEEE 802 Working Groups to review current IETF Working Groups to determine if there are any topics of mutual interest. Working Group charters and active Internet-Drafts can be found in the IETF Datatracker [DATATRACKER]. If an IEEE 802 Working Group identifies a common area of work, the IEEE 802 Working Group leadership should contact both the IETF Working Group chair and the Area Director(s) responsible. This may be accompanied by a formal liaison statement (see Section 5.2).

4.1.2. How IETF Is Informed about Active IEEE 802 Work Items

It is the responsibility of IETF Working Groups to periodically review the IEEE 802 web site to determine if there is work in progress of mutual interest.

IEEE 802 Working Group status reports are published at the beginning and end of each plenary at <http://ieee802.org/minutes>. Each Working Group includes a list of their active projects and the status.

The charter of an IEEE 802 project is defined in an approved Project Authorization Request (PAR). PARs are accessible in IEEE Standards myProject, at <https://development.standards.ieee.org>. Access requires an IEEE web account, which is free and has no membership requirement.

In myProject, a search on "View Active PARs" for 802 will bring up a list of all active IEEE 802 PARs.

If an IETF working group identifies a common area of work or a need for cooperation, the Working Group leadership should contact the IEEE 802 Working Group Chair and Task Group Chair. This may be accompanied by a formal liaison statement (see Section 5.2).

4.1.3. Overview of Notifications of New Work Proposals

These principles describe the notification process used by both organizations:

1. For both organizations, the technical group making a proposal for new work that may conflict with, overlap with, or be dependent on the other organization is responsible for informing the top-level coordination body in the other organization that cooperation may be required.

2. For both organizations, the top-level coordination body receiving that notification is responsible for determining whether cooperation is, in fact, required, and informing the specific groups within the organization who may be affected by the proposal for new work.

These direct notifications will be the most common way that each organization is informed about proposals for new work in the other organization. Several other ways of identifying proposed new work are described in the following sections. These additional ways act

as "belt and suspenders" to reduce the chances that proposals for new work in one organization escape notice in the other organization when cooperation will be required.

4.1.4. The New-Work Mailing List

Several standards development organizations (SDOs), including IETF and IEEE 802, have agreed to use a mailing list for the distribution of information about proposals for new work items among these SDOs.

Rather than having individual IEEE 802 participants subscribe directly to New-Work, a single IEEE 802 mailing list is subscribed. Leadership of the IEEE 802 Working Groups may subscribe to this "second-level" IEEE 802 mailing list, which is maintained by the Executive Committee (EC).

This mailing list is limited to representatives of SDOs proposing new work that may require cooperation with the IETF. Subscription requests may be sent to the IAB Executive Director.

4.1.5. How IEEE 802 Is Informed about Proposed New IETF Work Items

Many proposals for new IETF work items can be identified in proposed Birds of a Feather (BOF) sessions, as well as draft charters for Working Groups. The IETF forwards all such draft charters for new and revised Working Groups and BOF session announcements to the IETF New-Work mailing list.

4.1.6. How IEEE 802 Comments on Proposed New IETF Work Items

Each IEEE 802 Working Group Chair, or designated representative, may provide comments on these charters by responding to the IESG mailing list at iesg@ietf.org clearly indicating their IEEE 802 position and the nature of their concern.

It should be noted that the IETF turnaround time for new Working Group charters can be as short as two weeks, although the call-for-comment period on work items that may require cooperation with IEEE 802 can be extended to allow more time for discussion within IEEE 802. This places a burden on both organizations to proactively communicate and avoid "late surprises" to either organization.

Although an IEEE 802 Working Group may not be able to develop a formal consensus response unless the notification arrives during that Working Group’s meeting, the IEEE 802 Working Group chair can informally let the IETF know that IEEE 802 may have concerns about a proposed work item. The IETF will consider any informal comments received without waiting for a formal liaison statement.

4.1.7. How IETF Is Informed about Proposed New IEEE 802 Work Items

An IEEE 802 project is initiated by approval of a Project Authorization Request (PAR), which includes a description of the scope of the work. Any IEEE 802 PARs that introduce new functionality are required to be available for review no less than 30 days prior to the Monday of the IEEE 802 plenary session where they will be considered.

IEEE 802 considers "Five Criteria" when deciding whether to approve new work: Broad Market Potential, Compatibility, Distinct Identity, Technical Feasibility, and Economic Feasibility. The criteria are defined in the IEEE 802 LAN/MAN Standards Committee (LMSC) Operations Manual. The PARs are accompanied by responses on the "Five Criteria".

IEEE 802 posts proposed PARs to the New-Work mailing list, prior to the IEEE 802 meetings where the PARs will be discussed. The IETF coordination body will notify technical groups about PARs of interest.

4.1.8. How IETF Comments on Proposed New IEEE 802 Work Items

Any comments on proposed PARs should be submitted to the Working Group Chair and copied to the Executive Committee chair by email not later than 5:00 PM Tuesday of the plenary session (in the time zone where the plenary is located).

4.1.9. Other Mechanisms for Coordination

From time to time, IEEE 802 and IETF may agree to use additional mechanisms for coordination between the two groups. The details of these mechanisms may vary over time, but the overarching goal is to communicate effectively as needed.

As examples of such mechanisms, at the time this document was written, the two organizations are holding periodic conference calls between representatives of the IETF and IEEE 802 leadership teams, and are maintaining a "living list" of shared interests between the two organizations, along with the status of these interests and any related action items. At the time this document was written, the "living list" included about 20 topics being actively discussed, with more expected. These conference calls help the two organizations coordinate more effectively by allowing higher-bandwidth discussions than formal liaison statements would allow and by permitting more timely interactions than waiting for face-to-face meetings.

Minutes for these conference calls, and the "living lists" discussed on each call, are available at <http://www.iab.org/activities/joint-activities/iab-ieee-coordination/>.

4.2. Document Review and Approval

During the course of IEEE 802 and IETF cooperation, it is important for technical experts to review documents of mutual interest and, when appropriate, to provide review comments to the approving body as the document moves through the approval process.

4.2.1. IEEE 802 Draft Review and Balloting Processes

IEEE 802 drafts are reviewed and balloted at multiple stages of the draft. Any ballot comments received from non-voters before the close of the ballot are required to be considered in the comment resolution process. The Editors, Task Group Chairs, or Working Group Chairs responsible for the project will facilitate the entering of comments from non-voters.

IEEE 802 draft reviews and ballots sometimes produce a large volume of comments. In order to handle them efficiently, spreadsheets or a comment database tool are used. It is highly recommended that balloters and others submitting comments do so with a file that can be imported into these tools. A file with the correct format is normally referenced in the ballot announcement or can be obtained from the Editor, Task Group Chair, or Working Group Chair responsible for the project. Comments on a draft should be copied to the Editor, Task Group Chair, and Working Group Chair.

4.2.1.1. Task Group Review

During draft development, informal task group reviews (task group ballots) are conducted. Though these are called "ballots" by some Working Groups, the focus is on collecting and resolving comments on the draft rather than on trying to achieve a specific voting result.

4.2.1.2. Working Group Ballot

Once the draft is substantially complete, Working Group ballots are conducted. Working Group voting members are entitled and required to vote in Working Group ballots. Any "disapprove" votes are required to be accompanied by comments that indicate what the objection is and a proposed resolution. "Approve" votes may also be accompanied by comments. The comments submitted with a "disapprove" vote may be marked to indicate which comments need to "be satisfied" to change the vote.

Initial Working Group ballots are at least 30 days. Recirculation ballots to review draft changes and comment resolutions are open at least 10 days.

In order to submit a WG ballot, contact the WG Chair for the submission tool currently in use, as the tools may change over time.

4.2.1.3. Sponsor Ballot

When a draft has successfully completed Working Group ballot, it proceeds to Sponsor ballot. One may participate in IEEE 802 Sponsor ballots with an individual membership in the IEEE Standards Association (IEEE-SA) or by paying a per-ballot fee. Participants are also required to state their affiliation and the category of their relationship to the scope of the standards activity (e.g., producer, user, general interest).

Information about IEEE-SA membership can be found at <http://standards.ieee.org/membership/>.

Sponsor ballot is a public review. An invitation is sent to any parties known to be interested in the subject matter of the ballot. One can indicate interest in IEEE myProject (<https://development.standards.ieee.org>). An IEEE web account is freely available and is required for login. To select interest areas, go to the Projects tab and select "Manage Activity Profile" and check any areas of interest. IEEE 802 projects are under Computer Society; LAN/MAN Standards Committee.

The Sponsor ballot pool is formed from those that accept the invitation during the invitation period.

As with other ballot levels, the IETF participants who want to comment on Sponsor ballots need not be members in the Sponsor ballot pool. The Editors, Task Group Chairs, or Working Group Chairs responsible for the project will facilitate the entering of comments from IETF participants who are not members in the Sponsor ballot pool.

Any "disapprove" votes are required to be accompanied by comments that indicate what the objection is, along with a proposed resolution. "Approve" votes may also be accompanied by comments. The comments submitted with a "disapprove" vote may be marked to indicate which comments need to "be satisfied" for the commenter to change the vote from "disapprove".

Initial Sponsor ballots are open for at least 30 days. Recirculation ballots to review draft changes and proposed comment resolutions are open at least 10 days.

4.2.1.4. Ballot Resolution

At each level, the relevant group (Task Group for TG ballots, Working Group for WG and Sponsor ballots) examines the ballot comments and determines their disposition. The Editor (or editorial team) may prepare proposed dispositions. Task Group procedures vary, but at the Working Group level, the Working Group must vote 75 percent to approve the final ballot disposition in order to advance the document.

4.2.2. IETF Draft Review and Approval Processes

The IETF Working Group Process is defined in [BCP25]. The overall IETF standards process is defined in [BCP9].

As noted in Section 2.4, IETF Working Groups do not "ballot" to determine Working Group consensus to forward documents to the IESG for approval.

Technical contributions are welcome at any point in the IETF document review and approval process, but there are some points where contribution is more likely to be effective.

1. When a Working Group is considering adoption of an individual draft. Adoption is often announced on the Working Group’s mailing list.

2. When Working Group chairs issue a "Working Group Last Call" ("WGLC") for a draft, to confirm that the Working Group has consensus to request publication. Although this is not a mandatory step in the document review and approval process for Internet-Drafts, most IETF Working Groups do issue WGLCs for most Working Group documents. WGLC would be announced on the Working Group’s mailing list.

3. When the Internet Engineering Steering Group issues an "IETF Last Call" ("Last Call") for a draft. IETF Last Call is a formal and required part of the review and approval process, is addressed to the larger IETF community, and is often the first time the entire community has looked at the document. IETF Last Call is signaled on the IETF-Announce Mailing List, and comments and feedback are ordinarily directed to the IETF Discussion Mailing List.

In practice, earlier input is more likely to be effective input. IEEE 802 participants who are interested in work within the IETF should be monitoring that work and providing input long before Working Group Last Calls and IETF Last Calls, for best results.

Some IETF Working Group charters direct the Working Group to communicate with relevant IEEE 802 Task Groups.

4.3. Solicited Review Processes

With the number of areas of cooperation between IEEE 802 and IETF increasing, the document review process has extended beyond the traditional subjects of SMI (Structure of Management Information) MIB modules and AAA (Authentication, Authorization, and Accounting) described in [RFC4441]. IESG members routinely solicit directorate reviews as a means to request the opinion of specialized experts on specific aspects of documents in IESG review (examples include security, "MIB Doctors", or congestion management reviews). Area Directors may also require solicited reviews from IEEE 802 or IEEE 802 Working Groups when it becomes clear that the Internet-Draft has implications that impact some area of IEEE 802’s responsibility and expertise.

IEEE 802 leadership can also solicit similar reviews, but these reviews are not included as part of the formal IEEE 802 process.

5. Liaison Managers and Liaison Statements

Both IEEE 802 and IETF work best when people participate directly in work of mutual interest, but that is not always possible, and individuals speaking as individuals may not provide effective communication between the two SDOs. From time to time, it may be appropriate for a technical body in one SDO to communicate as a body with a technical body in the other SDO. This section describes the mechanisms used to provide formal communication between the two organizations, should that become necessary.

The Internet Architecture Board (IAB) is responsible for liaison relationship oversight for the IETF. In IEEE 802, liaison relationship oversight is distributed, and each organization appointing liaison managers is responsible for oversight of its own liaison relationships.

The reader should note that the role of a liaison manager in both IEEE 802 and IETF is not to "speak for" the appointing organization. A liaison manager is most helpful in ensuring that neither organization is surprised by what’s happening in the other organization, helping to identify the right people to be talking to

in each organization, and making sure that formal liaison statements don’t "get lost" between the two organizations. The IAB’s guidance to liaison managers is available in [RFC4691]. IEEE 802 organizations appointing each liaison manager also provide guidance to those liaison managers. There is no global guidance for all IEEE 802 liaison managers.

5.1. Liaison Managers

The IAB appoints IETF liaison managers using the process described in [BCP102]. The current list of the IETF’s liaison relationships and the liaison managers responsible for each of these relationships is available at <http://www.ietf.org/liaison/managers.html>.

IEEE liaison managers are selected by the organizations they represent, either in an election or by Working Group or Task Group Chair appointment. The current list of IEEE 802’s liaison relationships and the liaison managers responsible for each of these relationships is available at <http://www.ieee802.org/liaisons.shtml>.

5.2. Liaison Statements

The IEEE 802 procedure for sending and receiving liaison statements is defined by the Procedure for Coordination with Other Standards Bodies in the IEEE 802 LMSC Operations Manual (<http://ieee802.org/devdocs.shtml>).

The IETF process for sending and receiving liaison statements is defined in [BCP103].

6. Protocol Parameter Allocation

Both IEEE 802 and IETF maintain registries of assigned protocol parameters, and some protocol parameters assigned in one organization are of interest to the other organization. This section describes the way each organization registers protocol parameters.

6.1. IANA

The IETF uses the Internet Assigned Numbers Authority (IANA) as a central authority that administers registries for most protocol parameter allocations. The overarching document describing this is [BCP26]. [BCP141] discusses use of IEEE 802-specific IANA parameters in IETF protocols and specifies IANA considerations for allocation of code points under the IANA OUI (Organizationally Unique Identifier).

Requests for protocol parameter allocations from IANA are subject to assignment policies, and these policies vary from registry to registry. A variety of well-known policies are described in [BCP26], but registries are not limited to one of the well-known choices.

The purpose of these allocations is to manage a namespace appropriately, so unless a registry has a policy that allows something like first come, first served ("FCFS") for a namespace that is effectively unbounded, requests for protocol parameter allocation will require some level of review. "Standards Action" is at the other extreme (an approved Standards Track RFC is required in order to obtain an allocation). Some registries require that a request for allocation pass "Expert Review" -- review by someone knowledgeable in the technology domain, appointed by the IESG and given specific criteria to use when reviewing requests.

6.2. IEEE Registration Authority

The IEEE Standards Association uses the IEEE Registration Authority as a central authority administering registries. The IEEE Registration Authority Committee (IEEE RAC) provides technical oversight for the IEEE Registration Authority.

The list of Registries administered by the IEEE Registration Authority can be found on the IEEE RAC web site, at <http://standards.ieee.org/develop/regauth/general.html>.

Regarding Ethertype allocation:
Some IETF protocol specifications make use of Ethertypes. Ethertypes are a fairly scarce resource so allocation has the following requirements. All Ethertype requests are subject to review by a consultant to the IEEE RA, followed by IEEE RAC confirmation.

The IEEE RAC will not assign a new Ethertype to a new IETF protocol specification until the IESG has approved the protocol specification for publication as an RFC. In exceptional cases, the IEEE RA will consider "early allocation" of an Ethertype for an IETF protocol that is still under development when the request comes from, and has been vetted by, the IESG.

Note that "playpen" Ethertypes have been assigned in IEEE 802 [ARCH802] for use during protocol development and experimentation.

While a fee is normally charged by the IEEE Registration Authority Committee (RAC) for the allocation of an Ethertype, the IEEE RAC will consider waiving the fee for allocations relating to an IETF Standards Track document, based on a request from the IESG.

6.3. IEEE 802 Registration at the Working Group Level

Each IEEE 802 Working Group has a registry of identifier values and a mechanism to allocate identifier values in its standards and approved amendments. This includes items such as Object Identifiers for managed objects and assignment for protocols defined by that Working Group, such as OpCodes. Contact the IEEE 802 Working Group Chair for the details of a given Working Group registry.

6.4. Joint-Use Registries

Because some registries are "joint-use" between IEEE 802 and IETF, it is necessary for each organization to review usage of registries maintained by the other organization as part of the review and approval process for standards.

If an IEEE 802 document refers to IANA registries, those references should be checked prior to Sponsor balloting. If an IETF document refers to IEEE 802 registries, those references should be checked as part of IANA Review during IETF Last Call.

7. Security Considerations

This document describes cooperation procedures and has no direct Internet security implications.

8. References

8.1. Normative References

[BCP26] Narten, T. and H. Alvestrand, "Guidelines for Writing an IANA Considerations Section in RFCs", BCP 26, RFC 5226, May 2008.

[BCP141] Eastlake 3rd, D. and J. Abley, "IANA Considerations and IETF Protocol and Documentation Usage for IEEE 802 Parameters", BCP 141, RFC 7042, October 2013.

[RFC4691] Andersson, L., Ed., "Guidelines for Acting as an IETF Liaison to Another Organization", RFC 4691, October 2006.

8.2. Informative References

[ARCH802] IEEE 802, "IEEE Standard for Local and Metropolitan Area Networks: Overview and Architecture", IEEE 802 Std 802(TM)-2014, 2014.

[BCP9] Bradner, S., "The Internet Standards Process -- Revision 3", BCP 9, RFC 2026, October 1996.

Dusseault, L. and R. Sparks, "Guidance on Interoperation and Implementation Reports for Advancement to Draft Standard", BCP 9, RFC 5657, September 2009.

Housley, R., Crocker, D., and E. Burger, "Reducing the Standards Track to Two Maturity Levels", BCP 9, RFC 6410, October 2011.

Resnick, P., "Retirement of the "Internet Official Protocol Standards" Summary Document", BCP 9, RFC 7100, December 2013.

Kolkman, O., Bradner, S., and S. Turner, "Characterization of Proposed Standards", BCP 9, RFC 7127, January 2014.

[BCP10] Galvin, J., Ed., "IAB and IESG Selection, Confirmation, and Recall Process: Operation of the Nominating and Recall Committees", BCP 10, RFC 3777, June 2004.

Dawkins, S., Ed., "Nominating Committee Process: Earlier Announcement of Open Positions and Solicitation of Volunteers", BCP 10, RFC 5633, August 2009.

Dawkins, S., Ed., "The Nominating Committee Process: Open Disclosure of Willing Nominees", BCP 10, RFC 5680, October 2009.

Leiba, B., "Update to RFC 3777 to Clarify Nominating Committee Eligibility of IETF Leadership", BCP 10, RFC 6859, January 2013.

[BCP11] Hovey, R. and S. Bradner, "The Organizations Involved in the IETF Standards Process", BCP 11, RFC 2028, October 1996.

[BCP25] Bradner, S., "IETF Working Group Guidelines and Procedures", BCP 25, RFC 2418, September 1998.

Wasserman, M., "Updates to RFC 2418 Regarding the Management of IETF Mailing Lists", BCP 25, RFC 3934, October 2004.

[BCP39] Internet Architecture Board and B. Carpenter, Ed., "Charter of the Internet Architecture Board (IAB)", BCP 39, RFC 2850, May 2000.

[BCP101] Austein, R., Ed., and B. Wijnen, Ed., "Structure of the IETF Administrative Support Activity (IASA)", BCP 101, RFC 4071, April 2005.

Carpenter, B., Ed., and L. Lynch, Ed., "BCP 101 Update for IPR Trust", BCP 101, RFC 4371, January 2006.

[BCP102] Daigle, L., Ed., and Internet Architecture Board, "IAB Processes for Management of IETF Liaison Relationships", BCP 102, RFC 4052, April 2005.

[BCP103] Trowbridge, S., Bradner, S., and F. Baker, "Procedures for Handling Liaison Statements to and from the IETF", BCP 103, RFC 4053, April 2005.

[BCP111] Heard, C., Ed., "Guidelines for Authors and Reviewers of MIB Documents", BCP 111, RFC 4181, September 2005.

Heard, C., Ed., "RFC 4181 Update to Recognize the IETF Trust", BCP 111, RFC 4841, March 2007.

[BCP132] Housley, R. and B. Aboba, "Guidance for Authentication, Authorization, and Accounting (AAA) Key Management", BCP 132, RFC 4962, July 2007.

[BCP158] DeKok, A., Ed., and G. Weber, "RADIUS Design Guidelines", BCP 158, RFC 6158, March 2011.

[DADG] Morand, L., Ed., Fajardo, V. and H. Tschofenig, "Diameter Applications Design Guidelines", Work in Progress, June 2014.

[DATATRACKER]
Internet Engineering Task Force, "IETF Datatracker", <https://datatracker.ietf.org>.

[IEEE80211F]
IEEE, "IEEE Trial-Use Recommended Practice for Multi-Vendor Access Point Interoperability Via an Inter-Access Point Protocol Across Distribution Systems Supporting IEEE 802.11 Operation", IEEE 802 Std 802.11F(TM)-2003, 2003.

[IEEE-802.16-Liaison1]
Liaison letter from IEEE 802.16 to Bernard Aboba, March 17, 2005, <http://ieee802.org/16/liaison/docs/L80216-05_025.pdf>.

[IEEE-802.16-Liaison2]
Liaison letter from IEEE 802.16 to Bernard Aboba, May 5, 2005, <http://ieee802.org/16/liaison/docs/L80216-05_039.pdf>.

[RFC3575] Aboba, B., "IANA Considerations for RADIUS (Remote Authentication Dial In User Service)", RFC 3575, July 2003.

[RFC3710] Alvestrand, H., "An IESG charter", RFC 3710, February 2004.

[RFC3748] Aboba, B., Blunk, L., Vollbrecht, J., Carlson, J., and H. Levkowetz, Ed., "Extensible Authentication Protocol (EAP)", RFC 3748, June 2004.

[RFC4137] Vollbrecht, J., Eronen, P., Petroni, N., and Y. Ohba, "State Machines for Extensible Authentication Protocol (EAP) Peer and Authenticator", RFC 4137, August 2005.

[RFC4441] Aboba, B., Ed., "The IEEE 802/IETF Relationship", RFC 4441, March 2006.

[RFC4663] Harrington, D., "Transferring MIB Work from IETF Bridge MIB WG to IEEE 802.1 WG", RFC 4663, September 2006.

[RFC5247] Aboba, B., Simon, D., and P. Eronen, "Extensible Authentication Protocol (EAP) Key Management Framework", RFC 5247, August 2008.

[RFC6220] McPherson, D., Ed., Kolkman, O., Ed., Klensin, J., Ed., Huston, G., Ed., and Internet Architecture Board, "Defining the Role and Function of IETF Protocol Parameter Registry Operators", RFC 6220, April 2011.

[RFC6548] Brownlee, N., Ed., and IAB, "Independent Submission Editor Model", RFC 6548, June 2012.

[RFC6635] Kolkman, O., Ed., Halpern, J., Ed., and IAB, "RFC Editor Model (Version 2)", RFC 6635, June 2012.

[RFC6733] Fajardo, V., Ed., Arkko, J., Loughney, J., and G. Zorn, Ed., "Diameter Base Protocol", RFC 6733, October 2012.

[RFC6756] Trowbridge, S., Ed., Lear, E., Ed., Fishman, G., Ed., and S. Bradner, Ed., "Internet Engineering Task Force and International Telecommunication Union - Telecommunication Standardization Sector Collaboration Guidelines", RFC 6756, September 2012.

[RFC6929] DeKok, A. and A. Lior, "Remote Authentication Dial In User Service (RADIUS) Protocol Extensions", RFC 6929, April 2013.

[RFC7282] Resnick, P., "On Consensus and Humming in the IETF", RFC 7282, June 2014.

[RONR] Robert, H., et al., "Robert's Rules of Order Newly Revised", 11th ed., Da Capo Press, 2011, <http://www.robertsrules.com/>.

9. Acknowledgments

This document borrows a significant amount of text, and much of its structure, from [RFC6756]. Additional text was borrowed from [RFC4441]. We are grateful to the authors and editors of both these predecessor documents.

The initial draft of this document was assembled by a team of participants from both IEEE 802 and IETF. Team members included Dan Romascanu, Dorothy Stanley, Eric Gray, Patricia Thaler, Roger Marks, Ross Callon, Spencer Dawkins, and Subir Das.

We also thank Abdussalam Baryun, Adrian Farrel, Dave Thaler, Jari Arkko, Russ Housley, Jouni Korhonen, Max Riegel, Norm Finn, Pete Resnick, Peter Yee, S. Moonesamy, and Stephen Farrell for providing review comments.

10. IAB Members at the Time of Approval

Bernard Aboba
Jari Arkko
Marc Blanchet
Ross Callon
Alissa Cooper
Joel Halpern
Russ Housley
Eliot Lear
Xing Li
Erik Nordmark
Andrew Sullivan
Dave Thaler
Hannes Tschofenig

11. IEEE 802 Executive Committee Members at the Time of Approval

Radhakrishna Canchi
Clint Chaplin
John D’Ambrosia
Subir Das
James Gilb
Bob Heile
Tony Jeffree
Bruce Kraemer
David Law
John Lemon
Mike Lynch
Roger Marks
Apurva Mody
Paul Nikolich
Max Riegel
Jon Rosdahl
Steve Shellhammer
Pat Thaler
Geoff Thompson

Appendix A. Current Examples of IEEE 802 and IETF Cooperation

A.1. MIB Review

Historically, the MIB modules for IEEE 802.1 and IEEE 802.3 were developed in the IETF Bridge MIB and Hub MIB Working Groups, respectively. With travel budgets under pressure, it has become increasingly difficult for companies to fund employees to attend both IEEE 802 and IETF meetings.

As a result, an alternative was found to past arrangements that involved chartering MIB work items within an IETF WG. Instead, the work was transferred to IEEE 802 with expert support for MIB review from the IETF. The process of transfer of the MIB work from the IETF Bridge MIB WG to IEEE 802.1 WG is documented in [RFC4663].

By standardizing IEEE 802 MIBs only within IEEE 802 while utilizing the IETF SNMP quality control process, the IETF and IEEE 802 seek to ensure quality while decreasing overhead. In order to encourage wider review of MIBs developed by IEEE 802 WGs, it is recommended that MIB modules developed in IEEE 802 follow the MIB guidelines [BCP111]. An IEEE 802 group may request assignment of a "MIB Doctor" to assist in a MIB review by contacting the IETF Operations and Management Area Director.

A.2. AAA Review

IEEE 802 WGs requiring new AAA applications should send a liaison request to the IETF. Where new attribute definitions are sufficient, rather than defining new authentication, authorization, and accounting logic and procedures, an Internet-Draft can be submitted and review can be requested from AAA-related WGs such as the RADEXT or DIME WGs.

In addition to the RADEXT and DIME WGs, a "AAA doctors" team (directorate) is currently active in the OPS Area and can be consulted for more general advice on AAA issues that cross the limits of one or the other of the RADIUS or Diameter protocols, or are more generic in nature.

For attributes of general utility, particularly those useful in multiple potential applications, allocation from the IETF standard attribute space is preferred to creation of IEEE 802 Vendor-Specific Attributes (VSAs). As noted in [RFC3575]: "RADIUS defines a mechanism for Vendor-Specific extensions (Attribute 26) for functions specific only to one vendor’s implementation of RADIUS, where no

interoperability is deemed useful. For functions specific only to one vendor’s implementation of RADIUS, the use of that should be encouraged instead of the allocation of global attribute types."

Where allocation of VSAs are required, it is recommended that IEEE 802 create a uniform format for all of IEEE 802, rather than having each IEEE 802 Working Group create their own VSA format. The VSA format defined in [IEEE80211F] is inappropriate for this, since the Type field is only a single octet, allowing for only 255 attributes. It is recommended that IEEE 802 Working Groups read and follow the recommendations in "RADIUS Design Guidelines" [BCP158] and "Protocol Extensions" [RFC6929] when designing and reviewing new extensions and attributes.

"Diameter Applications Design Guidelines" [DADG] explains and clarifies the rules to extend the Diameter base protocol [RFC6733]. Extending Diameter can mean either the definition of a completely new Diameter application or the reuse of commands, Attribute-Value Pairs (AVPs), and AVP values in any combination for the purpose of inheriting the features of an existing Diameter application. The recommendation for reusing existing applications as much as possible is meaningful as most of the requirements defined for a new application are likely already fulfilled by existing applications. It is recommended that IEEE 802 Working Groups read and follow the recommendations in [DADG] when defining and reviewing new extensions and attributes.

A.3. EAP Review

The Extensible Authentication Protocol (EAP), defined in [RFC3748], provides a framework within which authentication mechanisms, known as methods, can be defined. In addition to supporting authentication, EAP also provides for key derivation as described in [RFC5247]. State machines for EAP are described in [RFC4137].

As noted in [BCP132] and [RFC5247], security issues can arise in integration of EAP within lower layers. Therefore, it is recommended that IEEE 802 WGs looking to incorporate support for EAP send a liaison request to the IETF, requesting assistance in carrying out a security review. As an example, a security review of IEEE 802.16 was carried out by the EAP WG, at the request of IEEE 802.16 [IEEE-802.16-Liaison1] [IEEE-802.16-Liaison2]. Where development of new EAP authentication methods is sufficient, an Internet-Draft can be submitted and review can be requested from WGs such as the EAP Method Update (EMU) WG.

Appendix B. Pointers to Additional Information

This section provides pointers to additional useful information for participants in IEEE 802 and IETF.

B.1. IEEE 802 Information

IEEE 802 Home Page: <http://ieee802.org/>

IEEE 802 policies and procedures:
<http://ieee802.org/devdocs.shtml>

The IEEE 802 WG and TAG main page URLs follow this convention: They have the one- or two-digit numerical designation for the WG or TAG appended after <http://ieee802.org/>. For example the IEEE 802.1 main web page is at <http://ieee802.org/1>, while the IEEE 802.11 main web page is at <http://ieee802.org/11>.

B.2. IETF Information

Information on IETF procedures may be found in the documents in the informative references and at the URLs below.

Note: RFCs do not change after they are published. Rather, they are either obsoleted or updated by other RFCs. Such updates are tracked in the rfc-index.txt file.

Current list and status of all RFCs:
<http://www.rfc-editor.org/rfc-index.html>

Current list and description of all IETF Internet-Drafts:
<ftp://ftp.ietf.org/internet-drafts/1id-abstracts.txt>

Current list of IETF Working Groups and their Charters:
<http://datatracker.ietf.org/wg/> (includes Area Directors and chair contacts, mailing list information, etc.)

Current list of requested BOFs:
<http://trac.tools.ietf.org/bof/trac/>

RFC Editor pages about publishing RFCs:
<http://www.rfc-editor.org> (including available tools and guidance)
<http://www.rfc-editor.org/pubprocess.html> is particularly helpful.

Current list of liaison statements:
<https://datatracker.ietf.org/liaison/>

IETF Intellectual Property Rights Policy and Notices: <http://www.ietf.org/ipr/>

The Tao of the IETF: <http://www.ietf.org/tao.html> (A Novice's Guide to the Internet Engineering Task Force)

Authors' Addresses

Spencer Dawkins
Huawei Technologies
1547 Rivercrest Blvd.
Allen, TX 75002
USA

EMail: spencerdawkins.ietf@gmail.com

Patricia Thaler
Broadcom Corporation
5025 Keane Drive
Carmichael, CA 95608
USA

EMail: pthaler@broadcom.com

Dan Romascanu
AVAYA
Park Atidim, Bldg. #3
Tel Aviv 61581
Israel

EMail: dromasca@avaya.com

Bernard Aboba (editor)
Microsoft Corporation
One Microsoft Way
Redmond, WA 98052
USA

EMail: bernard_aboba@hotmail.com

APPENDIX CH

Rishi Gupta

From: Christopher Hansen <chris@covariantcorp.com>
Sent: Monday, December 1, 2025 4:12 PM
To: Rishi Gupta; Nicholas Stephens
Subject: Fwd: [WiFi/802.11Course] Zoom Info and Student Packet for June 20 Course

[This email originated outside of F&R.]

---------- Forwarded message ---------
From: **Christopher Hansen** <chris@covariantcorp.com>
Date: Thu, Jun 18, 2020 at 12:58 PM
Subject: [WiFi/802.11Course] Zoom Info and Student Packet for June 20 Course

[redacted]

Hi Everyone,

Below is the Zoom link and the link for the zipped student package, including PDFs of the slide deck, PDFs for the 802.11 standards documents, and several Matlab LiveScripts that we will use for examples and exercises.

See you online this Saturday.

Chris

The Zoom info is:

Christopher Hansen is inviting you to a scheduled Zoom meeting.

Topic: WiFi/802.11 One Day Course
Time: Jun 20, 2020 09:30 AM Pacific Time (US and Canada)

Join Zoom Meeting
https://us02web.zoom.us/j/76202076258?pwd=NW9wOXZTdUhaeGk2bTRZMWtJVmpGZz09

Meeting ID: 762 0207 6258
Password: 80211
One tap mobile
+14086380968,,76202076258#,,,,0#,,80211# US (San Jose)
+16699006833,,76202076258#,,,,0#,,80211# US (San Jose)

Dial by your location
+1 408 638 0968 US (San Jose)
+1 669 900 6833 US (San Jose)
+1 253 215 8782 US (Tacoma)
+1 346 248 7799 US (Houston)
+1 301 715 8592 US (Germantown)
+1 312 626 6799 US (Chicago)
+1 646 876 9923 US (New York)
Meeting ID: 762 0207 6258
Password: 80211
Find your local number: https://us02web.zoom.us/u/kdGQcKVcdL

StudentPackage.zip

--
Christopher Hansen, Ph.D.
President, Covariant Corporation
chris@covariantcorp.com
408-899-8298 (office)
650-282-0215 (cell)

--
Christopher Hansen, Ph.D.
President, Covariant Corporation
chris@covariantcorp.com
408-899-8298 (office)
650-282-0215 (cell)

APPENDIX CI

Trials@uspto.gov
571-272-7822

Paper 12
Date: November 3, 2025

UNITED STATES PATENT AND TRADEMARK OFFICE

BEFORE THE PATENT TRIAL AND APPEAL BOARD

SAMSUNG ELECTRONICS CO., LTD.,
Petitioner,

v.

WILUS INSTITUTE OF STANDARDS AND TECHNOLOGY INC.,
Patent Owner.

IPR2025-00934
Patent 11,159,210 B2

Before TERRENCE W. McMILLIN, JON M. JURGOVAN, and DANIEL J. GALLIGAN, *Administrative Patent Judges*.

McMILLIN, *Administrative Patent Judge*.

DECISION
Granting Institution of *Inter Partes* Review
35 U.S.C. § 314

I. INTRODUCTION

A. Background and Summary

Samsung Electronics Co., Ltd. ("Petitioner")[1] filed a Petition for *inter partes* review of claims 1–9 of U.S. Patent No. 11,159,210 B2 (Ex. 1001, "the '210 patent"). Paper 2 ("Pet."), 1. Wilus Institute of Standards and Technology Inc. ("Patent Owner")[2] filed a Preliminary Response. Paper 9 ("Preliminary Response" or "Prelim. Resp.").

This Petition has been referred to the Board to determine whether to institute review. Paper 11. The standard for institution is set forth in 35 U.S.C. § 314(a), which provides that *inter partes* review may not be instituted unless "there is a reasonable likelihood that the petitioner would prevail with respect to at least 1 of the claims challenged in the petition." After considering the Petition and the Preliminary Response, as well as the evidence of record, we institute an *inter partes* review as to claims 1–9 of the '210 patent.

B. Related Proceedings

The parties identify the following district court matters related to the '210 patent: *Wilus Institute of Standards and Technology Inc. v. HP Inc.*, Case No. 2:22-cv-00752-JRG (E.D. Tex.); and *Wilus Institute of Standards and Technology Inc. v. Samsung Electronics Co., Ltd., et al.*, Case No. 2:22-cv-00746-JRG (E.D. Tex.). Pet. 81; Paper 4, 1–2.

---

[1] Petitioner identifies itself and Samsung Electronics America, Inc. as the real parties-in-interest to this proceeding. Pet. 81.

[2] Patent Owner identifies itself as the real party-in-interest to this proceeding. Paper 4, 1.

C. The ’210 Patent (Ex. 1001)

The ’210 patent is titled “Wireless Communication Method and Wireless Communication Terminal for Signaling Multi-User Packet.” Ex. 1001, code (54). The ’210 patent discloses receiving, through a communication unit, a high efficiency multi-user PHY protocol data unit (HE MU PPDU), wherein a preamble of the HE MU PPDU includes high efficiency signal A field (HE-SIG-A) and high efficiency signal B field (HE-SIG-B), and decoding the received HE MU PPDU based on information obtained from the HE-SIG-A, wherein a configuration of the HE-SIG-B is identified based on information obtained from at least one subfield of the HE-SIG-A. *Id.* at code (57).

Figures 13(d)-1 and 13(d)-2 of the ’210 patent are reproduced below:

Field	Bit	Descriptions
AID	11	STA ID
NSTS	3	# of Spatial Streams
TxBF	1	TxBF on/off
MCS	4	
DCM	1	
Coding	1	BCC/LDPC
Total	21	

(d)-1

Field	Bit	Descriptions
AID	11	STA ID
SCF	4	Spatial Conf. Fields
MCS	4	
DCM	1	
Coding	1	BCC/LDPC
Total	21	

(d)-2

FIG. 13

According to the ’210 patent, figures 13(d)-1 and 13(d)-2 “illustrate embodiments of the subfield configuration of the user field of the HE-SIG-B, respectively.” *Id.* at 20:33–35. More specifically, the ’210 patent states that figure 13(d)-1 “illustrates a user field for an OFDMA transmission,” and figure 13(d)-2 “illustrates a user field for a MU-MIMO transmission.” *Id.* at 20:35–37. The ’210 patent explains that “[w]hen one user is allocated to one resource unit (i.e., non-MU-MIMO allocation), the user field includes a number of space time streams (NSTS) field, a TxBF field, an MCS field, a DCM field and a coding field as illustrated in FIG. 13(d)-1,” and that “when a plurality of users are allocated to one resource unit (i.e., MU-MIMO allocation), the user field includes a spatial configuration field (SCF), an MCS field, a DCM field, and a coding field as illustrated in FIG. 13(d)-2.” *Id.* at 20:41–49.

D. Challenged Claims

Petitioner challenges claims 1–9 (all) of the ’210 patent. Pet. 1. Of the challenged claims, claims 1 and 6 are independent claims. Ex. 1001, 32:55–33:14; 34:1–22. Claim 1 recites:[3]

> [1pre] A wireless communication terminal, the terminal comprising:
>
> [1.1] a communication unit; and
>
> [1.2] a processor configured to process signals transmitted and received through the communication unit, wherein the processor is configured to:
>
> [1.3] receive, through the communication unit, a high efficiency multiuser PHY protocol data unit (HE MU PPDU), wherein a preamble of the HE MU PPDU includes high efficiency

[3] The bracketed labels correspond to those used by Petitioner to reference the claim limitations. *See* Pet. vii–ix. We use the same labels and parsing of the claims here for ease of reference, understanding, and consistency.

signal A field (HE-SIG-A) and high efficiency signal B field (HE-SIG-B), and

[1.4] decode the received HE MU PPDU based on information obtained from the preamble,

[1.5] wherein when a SIG-B compression field of the HE-SIG-A indicates full bandwidth multi User-Multiple Input Multiple Output (MU-MIMO) transmission, a format of user field(s) included in a user specific field of the HE-SIG-B is identified based on a number of MU-MIMO users indicated by a subfield of the HE-SIG-A,

[1.6] wherein when the number of MU-MIMO users indicates two or more users, the user specific field of the HE-SIG-B includes user fields for MU-MIMO allocation, and

[1.7] wherein when the number of MU-MIMO users indicates a single user, the user specific field of the HE-SIG-B includes one user field for non-MU-MIMO allocation.

Ex. 1001, 32:55–33:14.

Claim 6 recites:

[6pre] A wireless communication method of a wireless communication terminal, the method comprising:

[6.1] receiving a high efficiency multi-user PHY protocol data unit (HE MU PPDU), wherein a preamble of the HE MU PPDU includes high efficiency signal A field (HE-SIG-A) and high efficiency signal B field (HE-SIG-B); and

[6.2] decode the received HE MU PPDU based on information obtained from the preamble,

[6.3] wherein when a SIG-B compression field of the HE-SIG-A indicates full bandwidth multi User-Multiple Input Multiple Output (MU-MIMO) transmission, a format of user field(s) included in a user specific field of the HE-SIG-B is identified based on a number of MU-MIMO users indicated by a subfield of the HE-SIG-A,

[6.4] wherein when the number of MU-MIMO users indicates two or more users, the user specific field of the HE-SIG-B includes user fields for MU-MIMO allocation, and

[6.5] wherein when the number of MU-MIMO users indicates a single user, the user specific field of the HE-SIG-B includes one user field for non-MU-MIMO allocation.

Ex. 1001, 34:1–22.

E. The Asserted Grounds

Petitioner challenges claims 1–9 of the ’210 patent based on the grounds set forth in the table below.

Claims Challenged	35 U.S.C. §	Reference(s)/Basis
6–9	103[4]	802.11ax_D1.0[5]
1–5	103	802.11ax_D1.0, Bharadwaj[6]
1–9	103	Bharadwaj, Sun[7]

Pet. 1.

II. OBVIOUSNESS ANALYSIS

A. Principles of Law

Under 35 U.S.C. § 103, a patent claim is unpatentable “if the differences between the claimed invention and the prior art are such that the

[4] The Leahy-Smith America Invents Act, Pub. L. No. 112-29, 125 Stat. 284 (2011) (“AIA”), amended 35 U.S.C. § 103 effective on March 16, 2013. The application for the ’210 patent is U.S. Application No. 16/731,031, filed on December 31, 2019, which claims priority to two Korean applications filed January 9, 2017 and January 18, 2017. Ex. 1001, codes (21), (22), (30). Because the application for the ’210 patent claims a priority date after the effective date of the applicable AIA amendment, the AIA version of § 103 applies for purposes of institution.

[5] IEEE P802.11ax/D1.0 Draft Standard for Information technology–Telecommunications and information exchange between systems Local and metropolitan area networks–Specific requirements. Part 11: Wireless LAN Medium Access Control (MAC) and Physical Layer (PHY) Specifications. Amendment 6: Enhancements for High Efficiency WLAN (Ex. 1004).

[6] US 2017/0181130 A1 (Ex. 1013).

[7] US 2016/0204912 A1 (Ex. 1015).

claimed invention as a whole would have been obvious before the effective filing date of the claimed invention to a person having ordinary skill in the art to which the claimed invention pertains." *See KSR Int'l Co. v. Teleflex Inc.*, 550 U.S. 398, 406 (2007) (similar language). The question of obviousness involves resolving underlying factual determinations including (1) the scope and content of the prior art; (2) any differences between the claimed subject matter and the prior art; (3) the level of ordinary skill in the art; and when presented (4) objective evidence of non-obviousness (not presented here). *Graham v. John Deere Co.*, 383 U.S. 1, 17–18 (1966). Further, "there must be some articulated reasoning with some rational underpinning to support the legal conclusion of obviousness." *See KSR*, 550 U.S. at 418.

B. Level of Ordinary Skill in the Art

Petitioner contends that

> For purposes of this IPR, a person of ordinary skill in the art ("POSITA") would have had a Bachelor's degree in electrical engineering, computer engineering, computer science, or a related field, and at least 3 years of experience in the research, design or development of wireless communication devices, systems, and/or networks, or the equivalent, as of the Critical Date.

Pet. 3 (citing Ex. 1003 ¶¶ 29–31). Petitioner further states that "[i]ncreased educational experience can make up for less work experience, and vice versa." *Id.* Patent Owner contends that "[t]o the extent that Petitioner requires that the required experience and/or education level to be acquired by January 9, 2017, Petitioner objects to this requirement because it is not relevant or needed for someone to be a POSITA." Prelim. Resp. 6. Patent

Owner does not otherwise challenge Petitioner's definition for purposes of its Preliminary Response. *Id.*

Determining the level of ordinary skill in the art involves various factors, including the "type of problems encountered in the art; prior art solutions to those problems; rapidity with which innovations are made; sophistication of the technology; and educational level of active workers in the field." *In re GPAC Inc.*, 57 F.3d 1573, 1579 (Fed. Cir. 1995) (citation omitted). The prior art of record also reflects the level of ordinary skill in the art. *See Okajima v. Bourdeau*, 261 F.3d 1350, 1355 (Fed. Cir. 2001). For purposes of this Institution Decision, with the exception of the open-ended language "at least," we adopt the assessment offered by Petitioner, as it is consistent with the '210 patent and the asserted prior art.[8]

C. Claim Construction

In *inter partes* reviews, the Board construes claims using the same claim construction standard employed in a civil action under 35 U.S.C. § 282(b). 37 C.F.R. § 42.100(b) (2024). The "words of a claim 'are generally given their ordinary and customary meaning,'" as would have been understood by a person of ordinary skill in the art at the time of the invention. *Phillips v. AWH Corp.*, 415 F.3d 1303, 1312 (Fed. Cir. 2005) (en banc) (quoting *Vitronics Corp. v. Conceptronic, Inc.*, 90 F.3d 1576, 1582 (Fed. Cir. 1996)). "In determining the meaning of the disputed claim limitation, we look principally to the intrinsic evidence of record, examining the claim language itself, the written description, and the prosecution

[8] No matter how designated in this Decision, any determination (except our decision to institute trial) is preliminary and non-binding. We wish to have the full record as developed during trial before rendering any binding determination, finding, or conclusion.

history, if in evidence." *DePuy Spine, Inc. v. Medtronic Sofamor Danek, Inc.*, 469 F.3d 1005, 1014 (Fed. Cir. 2006) (citing *Phillips*, 415 F.3d at 1312–1317).

Petitioner asserts that "no formal claim constructions are necessary." Pet. 2. Patent Owner notes that "both parties have submitted terms for construction in the district court for this Patent" (Prelim. Resp. 6), but that "for purposes of [the] Preliminary Response, Patent Owner applies the plain and ordinary meaning of the challenged claims" (*id*. at 8).

Accordingly, at this stage, no need exists to expressly construe any claim terms to resolve the parties' disputes.[9] *See Nidec Motor Corp. v. Zhongshan Broad Ocean Motor Co.*, 868 F.3d 1013, 1017 (Fed. Cir. 2017) ("[W]e need only construe terms 'that are in controversy, and only to the extent necessary to resolve the controversy.'" (quoting *Vivid Techs., Inc. v. Am. Sci. & Eng'g, Inc.*, 200 F.3d 795, 803 (Fed. Cir. 1999))).

D. Prior Art Status of 802.11ax_D1.0 (Ex. 1004)

Petitioner challenges claims 1–9 of the '210 patent as obvious in view of 802.11ax_D1.0 (Ex. 1004) (claims 6–9 (Ground 1A)) and the combination of 802.11ax_D1.0 and Bharadwaj (Ex. 1013) (claims 1–5 (Ground 1B)). Pet. 1, 32–61. For either of these challenges to succeed, Petitioner must establish that 802.11ax_D1.0 is prior art to the challenged claims of the '210 patent.

[9] If either party contends that explicit claim construction is necessary in order to make a final determination whether or not any challenged claim is unpatentable based on the arguments and evidence presented, it should clearly explain why during trial and provide a clear and unambiguous construction with supporting evidence including specifically identifying the challenges, claims, and limitations to which the construction is necessary.

According to the Federal Circuit, "[b]ecause there are many ways in which a reference may be disseminated to the interested public, 'public accessibility' has been called the touchstone in determining whether a reference constitutes a 'printed publication'" under Section 102. *Kyocera Wireless Corp. v. Int'l Trade Comm'n*, 545 F.3d 1340, 1350 (Fed. Cir. 2008) (quoting *In re Hall*, 781 F.2d 897, 898–99 (Fed. Cir. 1986)). A reference is publicly accessible "upon a satisfactory showing that such document has been disseminated or otherwise made available to the extent that persons interested and ordinarily skilled in the subject matter or art exercising reasonable diligence, can locate it." *SRI Int'l, Inc. v. Internet Sec. Sys., Inc.*, 511 F.3d 1186, 1194 (Fed. Cir. 2008).

802.11ax_D1.0 is a draft standard of the LAN/MAN Standards Committee of the IEEE Computer Society. Ex. 1004, 1. 802.11ax_D1.0 relates to "modifications to both the IEEE 802.11 physical layer (PHY) and the medium access control (MAC) sublayer for high efficiency operation in frequency bands between 1 GHz and 6 GHz." *Id*. at 2.

In support of its contention that 802.11ax_D1.0 was publicly accessible before the critical date of January 9, 2017, Petitioner cites Exhibit 1026 ("Public Accessibility Declaration of Christopher Hansen, Ph.D."). Petitioner contends that "802.11ax_D1.0 was publicly available at least as early as December 1, 2016, and is prior art at least under 35 U.S.C. § 102(a)(1)." Pet. 2 (citing Ex. 1026 ¶¶ 59–63); *see also id*. at 17–19 (addressing the "Public Availability of 802.11ax_D1.0" and citing Ex. 1026 ¶¶ 1–78). Specifically, Petitioner contends that:

> Interested members of the public would have gained access to 802.11ax_D1.0 either by following IEEE's straightforward procedures for joining the ranks of voting members of the IEEE

> 802.11 Working Group by the Critical Date of the '210 Patent, or simply by obtaining a copy of 802.11ax_D1.0 from a voting member (or an intermediary who obtained a copy from a voting member).

Id. at 17. Patent Owner challenges the contention that 802.11ax_D1.0 is prior art. Prelim. Resp. 2, 18–22. Patent Owner argues that "the Petition fails to establish that 802.11ax_D1.0 was 'publicly accessible' for purposes of serving as printed-publication prior art." *Id*. at 18.

802.11ax_D1.0 was circulated to IEEE 802.11 Working Group on December 1, 2016, to be voted on for approval before publication. The Petition states:

> TGax created and submitted 802.11ax_D1.0 to letter balloting for consideration and approval by the broader IEEE 802.11 Working Group, and 802.11ax_D1.0 was officially released on December 1, 2016, when it was made available online to members of the IEEE 802.11 Working Group, who were notified by email of the same. [Ex. 1026 ¶]¶24, 56-63.

Pet. 17. However, 802.11ax_D1.0 was distributed in a restricted manner that required membership in the group working to the create the draft and a password to gain access to the draft. The Patent Owner argues:

> The Petition acknowledges that the document was not "publicly accessible" in the conventional sense. Dr. Hansen explains—and the Petition does not mention—that, first, the existence of 802.11ax_D1.0 was made known to "IEEE 802.11 Working Group" via email on December 1, 2016, and that the email contained a "link to the draft D1.0 PDF, which was password protected." Ex. 1026, ¶ 60. According to Dr. Hansen, a "voting member of the IEEE 802.11 Working Group could enter their credentials" to download a copy of 802.11ax_D1.0. The draft was otherwise not "publicly accessible" in the myriad scenarios addressed by the Federal Circuit case law on this issue: for example, it was not

> downloadable or retrievable via the Internet by a member of the general public, it could not be located in a library via an index of collected works, and so on.

Prelim. Resp. 18.

The first of the two ways that Petitioner argues that 802.11ax_D1.0 was publicly available was that "[i]nterested members of the public would have gained access to 802.11ax_D1.0 either by following IEEE's straightforward procedures for joining the ranks of voting members of the IEEE 802.11 Working Group by the Critical Date of the '210 Patent." Pet. 17. However, Patent Owner disputes this contention with:

> [T]he Petition contends that it would have been simple for a POSITA (having graduated from college 3 years earlier) to follow "straightforward procedures for joining the ranks of voting members of the IEE 802.11 Working Group." Pet. at 17. Those procedures, as of the critical date, required an interested person to attend three IEEE working group meetings ***in person***, two of which must be week-long "plenary" meetings. *See* Ex. 1035, ¶¶ 66-70.
>
> Dr. Hansen's declaration itself shows why the Petition's arguments are suspect. *See* Ex. 1035, ¶ 69. If an interested member of the public desired to become a voting member of IEEE 802.11 Working Group as late as possible before the January 2017 critical date, they would have needed to do the following:
>
> • Attend at least two "plenary" IEEE meetings in the following locations and dates: (1) Macau, March 2016; (2) San Diego, California, July 2016, and (3) San Antonio, Texas, November 2016.
>
> • If only two "plenary" meetings attended, attend at least one of the following non-plenary IEEE meetings: (1) Waikoloa, Hawaii, May 2016, (2) Warsaw, Poland, September 2016.
>
> The Petition's theory that a POSITA would have just "joined" Working Group and become a member fails for numerous reasons.

Prelim. Resp. 20–21. Thus, the evidence establishes that becoming a member of the IEEE 802.11 Working Group was a lengthy process. And, as Patent Owner points out, it would have been impossible to have become a member of the IEEE 802.11 Working Group after learning of the existence of 802.11ax_D1.0 on, or after, December 1, 2016, before the critical date of January 9, 2017. *See id*. at 21–22.

The second of the two ways that Petitioner argues that 802.11ax_D1.0 was publicly available was "by obtaining a copy of 802.11ax_D1.0 from a voting member (or an intermediary who obtained a copy from a voting member)." Pet. 17. Petitioner cites paragraphs 71–77 of Exhibit 1026 (Dr. Hansen's "Public Accessibility Declaration") in support of this argument. *See* Pet. 18–19. But, Dr. Hansen's testimony does not show any first-hand knowledge of any member of the 802.11 Working Group sharing a copy of 802.11ax_D1.0 prior to the critical date of January 8, 2017. *See generally* Ex. 1026.[10] In cited paragraphs 73–76, Dr. Hansen refers to submissions related to drafts of 802.11ax_D1.0 being submitted by persons who were not members of the 802.11 Working Group but all were in March, 2017, after the critical date and after 802.11ax_D1.0 had been voted on and approved by the voting members of the 802.11 Working Group. *See id*. at ¶ 61.

[10] Dr. Hansen's testimony as to the public availability of 802.11ax_D1.0 appears to be based upon his review of documents currently available on IEEE's public email archive and webpages. *See* Ex. 1026 ¶¶ 59–63. Dr. Hansen does not testify to personally accessing 802.11ax_D1.0, or otherwise knowing of, 802.11ax_D1.0 during December, 2016, or early January, 2017. *See* Ex. 1026. Dr. Hansen does not testify as to how or when he first became aware of, or was first able to access, 802.11ax_D1.0. *See id*.

We are aware, however, that we must not confuse access with accessibility. *See Samsung Elecs. Co. v. Infobridge Pte. Ltd.*, 929 F.3d 1363, 1374 (Fed. Cir. 2019) ("[A] petitioner need not establish that specific persons actually accessed or received a work to show that the work was publicly accessible."). Dr. Hansen notes that the cover of 802.11ax_D1.0 grants permission to reproduce the document to others for consideration. Ex. 1026 ¶ 72; *see* Ex. 1004, 1 ("Permission is hereby granted for IEEE Standards Committee participants to reproduce this document for purposes of international standardization consideration."). Dr. Hansen also testifies that meetings to discuss 802.11ax_D1.0 were open to the public. Ex. 1026 ¶ 58 (citing Appendix J to declaration). Thus, it appears, on the current record, that the purpose of 802.11ax_D1.0 was to promote dialogue with interested artisans, which indicates public accessibility. *See Valve Corp. v. Ironburg Inventions Ltd.*, 8 F.4th 1364, 1374 (Fed. Cir. 2021) ("We have previously held that where a publication's purpose is 'dialogue with the intended audience,' that purpose indicates public accessibility." (citation omitted)).

After having reviewed all the arguments and evidence presented by the parties, we would like to see further development of this issue during trial. The current record is not well-developed on this issue either factually or legally. With regard to the factual record, Patent Owner has not yet had the opportunity to depose Dr. Hansen or been given a full opportunity to marshal its own evidence on this issue. With regard to the law, we would like to see the parties apply the relevant case law to the developed facts as to the public accessibility and prior art status of 802.11ax_D1.0. We will determine, if necessary and appropriate, whether 802.11ax_D1.0 is prior art

to the challenged claims of the ’210 patent based on the full record as developed during trial.

E. Asserted Obviousness of Claims 1–9 Based on Bharadwaj and Sun

Petitioner challenges claims 1–9 as being obvious in view of a combination of the teachings of Bharadwaj and Sun. *See* Pet. 1, 61–81 (Ground 2). We start our analysis with a description of Bharadwaj and Sun and then consider the arguments and evidence presented by parties.

1. Bharadwaj (Ex. 1013)

Bharadwaj is titled “Preamble Design Aspects for High Efficiency Wireless Local Area Networks.” Ex. 1013, code (54). Bharadwaj relates to a “first signaling field and/or a second signaling field of a preamble used for transmitting frames in high efficiency (HE) wireless local area networks (WLANs) . . . modified to improve performance and efficiency of HE WLANs.” *Id.* ¶ 6.

Figure 1 of Bharadwaj is reproduced below:

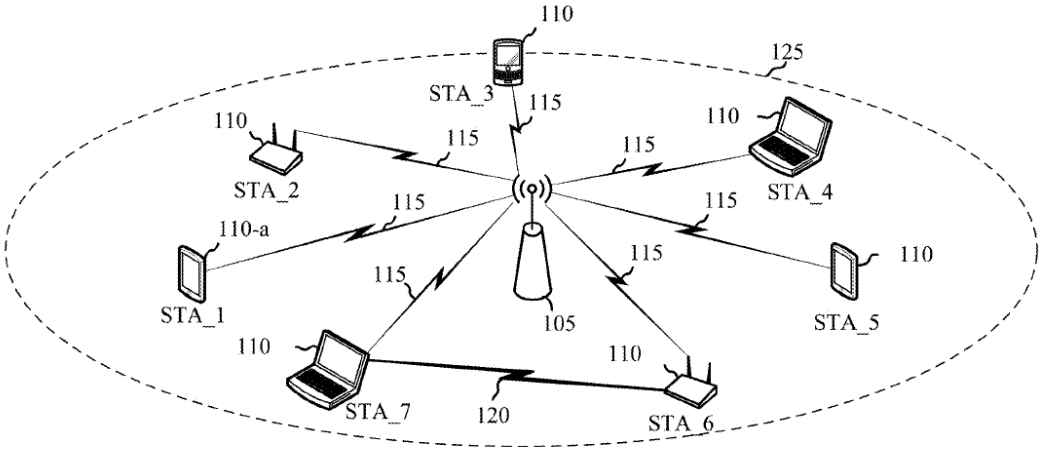

FIG. 1

100

According to Bharadwaj, Figure 1 "illustrates an example of a wireless communications system 100 that supports preamble design aspects for HE WLANs." *Id.* ¶ 60. Bharadwaj states that "[t]he WLAN 100 includes an AP 105 and wireless stations (STAs) 110 labeled as STA_l through STA_7." *Id.* ¶ 61. Bharadwaj further states that "[t]he STAs 110 can be mobile handsets, tablet computers, personal digital assistants (PDAs), other handheld devices, netbooks, notebook computers, tablet computers, laptops, desktop computers, display devices (e.g., TVs, computer monitors, etc.), printers, etc." *Id.* "The STAs 110 associate and communicate with the AP 105 via a communication link 115." *Id.*

Bharadwaj explains that "[h]igh efficiency (HE) WLAN preambles can be used to schedule multiple devices, such as STAs 110, for single-user simultaneous transmission (e.g., single-user orthogonal frequency division multiple access (SU-OFDMA)) and/or MU-MIMO transmissions (e.g., multiple-input/multiple-output MU-MIMO)." *Id.* ¶ 65. Bharadwaj states that "[i]n one example a HE WLAN signaling field is used to signal a resource allocation pattern to multiple receiving STAs 110." *Id.*

Bharadwaj states that a high efficiency WLAN preamble may include "any of: a repeated legacy WLAN field (e.g., an RL-SIG field), a first WLAN signaling field (e.g., a first HE WLAN signaling field such as HE-SIG-A), [and] a second WLAN signaling field (e.g., a second HE WLAN signaling field such as HE-SIG-B)." *Id.* ¶ 69. According to Bharadwaj, "[t]he HE WLAN preamble . . . uses a common signaling field and one or more dedicated (e.g., station-specific) signaling fields to schedule resources and to indicate the scheduling to other WLAN devices." *Id.*

Petitioner contends that "Bharadwaj is prior art at least as of its filing date under 35 U.S.C. § 102(a)(2)." Pet. 2. Patent Owner does not challenge Petitioner's contention that Bharadwaj is prior art. *See* Prelim. Resp. Bharadwaj is a U.S. Patent Application Publication that was filed on December 21, 2016.[11] Ex. 1013, code (22). 35 U.S.C. § 102(d)(2) provides that a published patent application is prior art as of its filing date. The earliest priority claimed for the '210 patent is January 9, 2017. Ex. 1001, code (30). On this record, Bharadwaj is prior art to the '210 patent.

2. Sun (Ex. 1015)

Sun is titled "Downlink Signaling in a High Efficiency Wireless Local Area Network (WLAN)." Ex. 1015, code (54). Sun relates to a method for generating a physical layer (PHY) data unit, including "generating a first signal field to include multiple copies of first signal field content, wherein the first signal field content spans one sub-band of a plurality of sub-bands of the PHY data unit, and wherein the multiple copies collectively span the plurality of sub-bands of the PHY data unit," and "generating a second signal field to include multiple copies of second signal field content, wherein the second signal field content spans multiple ones of the plurality of sub-bands of the PHY data unit, and wherein the multiple copies of the

[11] Bharadwaj claims priority to five provisional patent applications with earlier filing dates. Ex. 1013, code (60). Therefore, Bharadwaj may have an effective filing date under 35 U.S.C. § 102(a)(2) that is earlier than December 21, 2016. But, we need not, and do not, consider whether Bharadwaj is entitled to an effective filing date earlier than December 21, 2016, as this date is sufficient for Bharadwaj to be prior art to the '210 patent.

second signal field collectively span the plurality of sub-bands of the PHY data unit." *Id.* at code (57).

Sun teaches a data unit that includes a preamble including a first HE signal field (HE-SIG-A) and a second HE signal field (HE-SIG-B). *Id.* ¶ 43. Sun further teaches an HE-SIG-B signal field that includes a common portion and a per-allocation portion. *Id.* ¶¶ 72–73. According to Sun, the per-allocation portion "includes one or more user blocks . . . respectively corresponding to one or more users." *Id.* ¶ 73. Sun discusses user blocks that correspond to each of an MU-MIMO resource unit and a single user resource unit. *Id.* ¶¶ 31, 82.

Petitioner contends that "Sun is prior art under 35 U.S.C. § 102(a)(1)-(2)." Pet. 2. Patent Owner does not challenge Petitioner's contention that Sun is prior art. *See* Prelim. Resp. Sun is a U.S. Patent Application Publication that was filed on January 8, 2016.[12] Ex. 1015, code (22). 35 U.S.C. § 102(d)(2) provides that a published patent application is prior art as of its filing date. The earliest priority claimed for the '210 patent is January 9, 2017. Ex. 1001, code (30). On this record, Sun is prior art to the '210 patent.

3. Independent Claim 1

Our limitation-by-limitation analysis of the showing in the Petition for claim 1 is provided below.

---

[12] Sun claims priority to six provisional patent applications with earlier filing dates. Ex. 1015, code (60). Therefore, Sun may have an effective filing date under 35 U.S.C. § 102(a)(1)–(2) that is earlier than January 18, 2016. But, we need not, and do not, consider whether Sun is entitled to an effective filing date earlier than January 8, 2016, as this date is sufficient for Sun to be prior art to the '210 patent.

[1pre] A wireless communication terminal, the terminal comprising:[13]

Petitioner relies on Bharadwaj for teaching "a wireless communication terminal." Pet. 66 (citing Ex. 1003 ¶159; Ex. 1013 ¶¶ 61, 64, 65). Bharadwaj describes a wireless communication system (WLAN 100 (*see* Fig. 1)) that "includes an AP 105 and wireless stations (STAs) 110." Ex. 1013 ¶ 61.

Patent Owner does not challenge Petitioner's contention that Bharadwaj teaches "a wireless communication terminal." *See* Prelim. Resp.

We determine that the preamble of claim 1 is disclosed in Bharadwaj.

[1.] a communication unit; and

Petitioner relies on Bharadwaj for teaching "a communication unit." Pet. 66–67 (citing Ex. 1003 ¶¶ 160–162; Ex. 1013 ¶¶ 150, 151, Fig. 13A). Figure 13A of Bharadwaj, as annotated by Petitioner, is reproduced below.

[13] Petitioner does not address whether the preamble of claim 1 is limiting. *See* Pet. 66. We determine that the preamble of claim 1 is not limiting because it does not recite essential structure and is not necessary to give life, meaning, and vitality to the claim. *See Shoes by Firebug LLC v. Stride Rite Children's Group, LLC*, 962 F.3d 1362, 1367 (Fed. Cir. 2020).

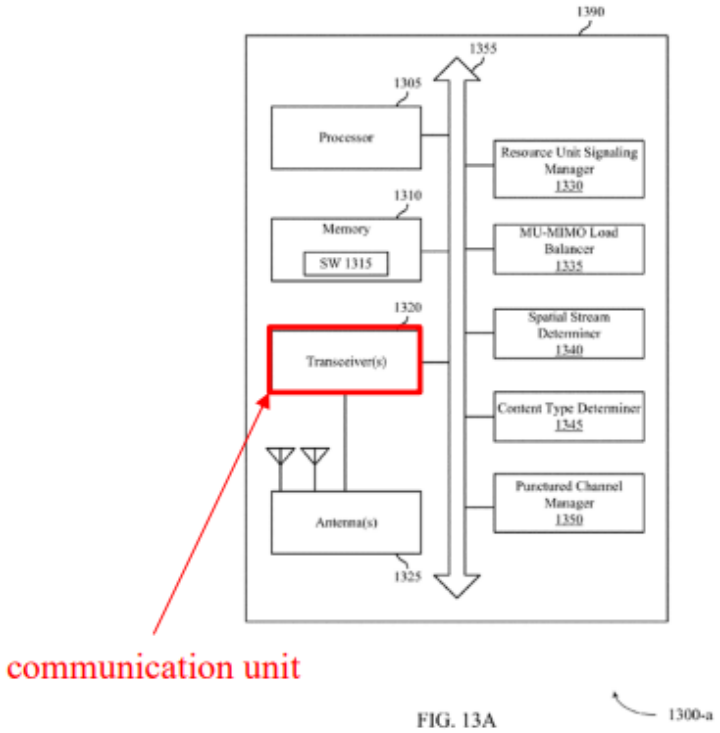

SAMSUNG-1013, FIG. 13A (annotated)

Id. at 67. Figure 13A depicts a "block diagram of an example device." Ex. 1013 ¶ 43. The Petition provides:

> "The transceiver(s) 1320 communicate bi-directionally with other wireless devices, such as APs 105, STAs 110, or other devices." SAMSUNG-1013, ¶[0151]. "The processor 1305 processes information received through the transceiver(s) 1320 and information to be sent to the transceiver(s) 1320 for transmission through the antenna (s) 1325." *Id*., ¶[0150]; SAMSUNG-1003, ¶¶160-162.

Pet. 67.

Patent Owner does not dispute the showing for this limitation. *See* Prelim Resp.

We determine that Bharadwaj teaches this limitation.

[1.2] a processor configured to process signals transmitted and received through the communication unit, wherein the processor is configured to:

Petitioner relies on Bharadwaj for teaching "a processor." Pet. 66–67 (citing Ex. 1003 ¶¶ 163–164; Ex. 1013 ¶ 150, Fig. 13A). Figure 13A of Bharadwaj, as annotated by Petitioner, is reproduced below.

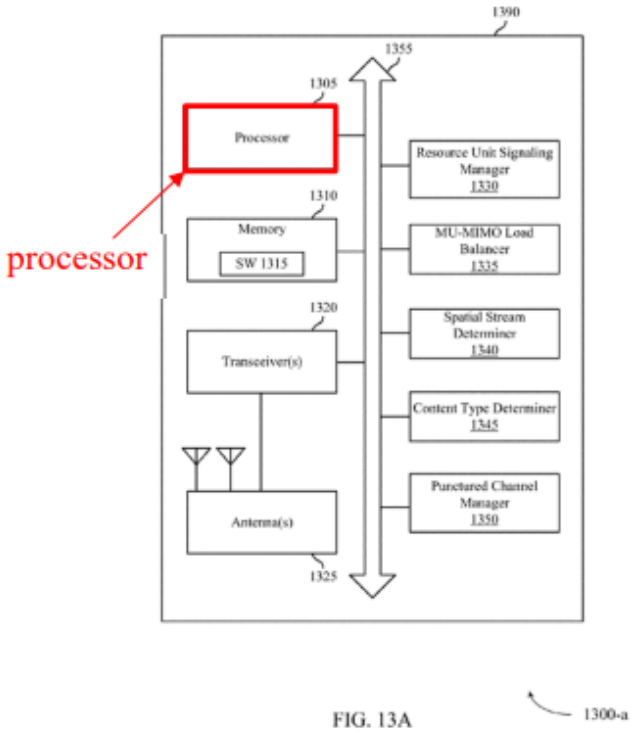

SAMSUNG-1013, FIG. 13A (annotated)

Id. at 68. Figure 13A depicts a "block diagram of an example device." Ex. 1013 ¶ 43. The Petition provides that "[i]n Bharadwaj, the station includes a processor configured to process signals transmitted and received through the communication unit." Pet. 67–68. Bharadwaj discloses that "[t]he processor 1305 processes information received through the transceiver(s) 1320 and information to be sent to the transceiver(s) 1320 for transmission through the antenna (s) 1325." Ex. 1013 ¶ 150.

Patent Owner does not dispute the showing for this limitation. *See* Prelim Resp.

We determine that Bharadwaj teaches this limitation.

[1.3] receive, through the communication unit, a high efficiency multiuser PHY protocol data unit (HE MU PPDU), wherein a preamble of the HE MU PPDU includes high efficiency signal A field (HE-SIGA) and high efficiency signal B field (HE-SIG-B), and

Petitioner relies on Bharadwaj for teaching all the elements of this limitation. Pet. 68–70 (citing Ex. 1003 ¶ 165; Ex. 1013 ¶¶ 70–72, 95–97, 139, 173, Figs. 3, 21A–21C, 25). Figure 3 of Bharadwaj, as annotated by Petitioner, is reproduced below.

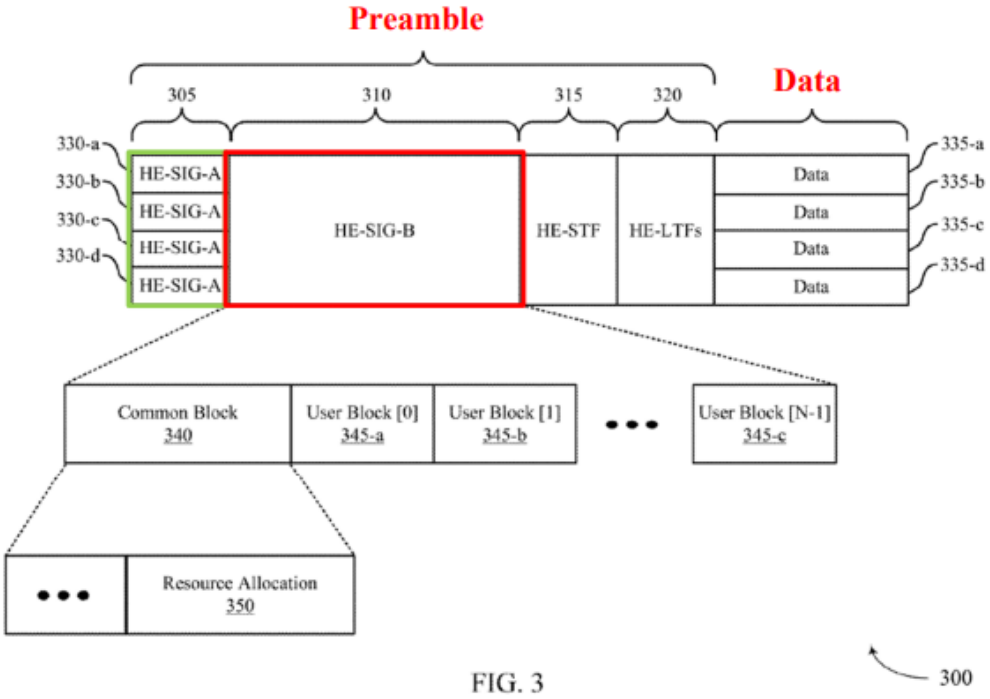

SAMSUNG-1013, FIG. 3 (annotated)

Pet. 69. Figure 3 depicts "an example of aspects of a WLAN protocol data unit for preamble design aspects for HE WLANs." Ex. 1013 ¶ 32. The Petition provides:

> Bharadwaj describes a processor (processor connected to transceiver) configured to receive an HE MU PPDU. *E.g.*, SAMSUNG-1013, ¶¶[0139], [0172], FIG. 25. As shown in FIG. 3, Bharadwaj also describes that the HE MU PPDU includes a preamble with HE-SIG-A and HE-SIG-B fields. *Id.*, ¶¶[0070]-[0072], [0095]-[0097], FIGS. 3, 21A-C; SAMSUNG-1003, ¶165.
>
> . . . .
>
> Bharadwaj discloses that the User Blocks 345 are part of an HE MU PPDU. SAMSUNG-1013, ¶[0094]; SAMSUNG-1003, ¶165. A POSITA would have recognized that Bharadwaj disclosed the HE MU PPDU based on Bharadwaj's disclosure of the HE-SIG-B field, which only appears in the HE MU PPDU.

Pet. 69. The cited passages and figures in Bharadwaj support Petitioner's contention that the cited art teaches all the elements of this limitation.

Patent Owner does not dispute the showing for this limitation. *See* Prelim Resp.

We determine that Bharadwaj teaches this limitation.

[1.4] decode the received HE MU PPDU based on information obtained from the preamble,

Petitioner relies on Bharadwaj for teaching all the elements of this limitation. Pet. 70 (citing Ex. 1003 ¶ 166; Ex. 1013 ¶¶ 65, 69–72). The Petition provides:

> Bharadwaj describes information provided in a preamble is used by a device to decode the subsequent data. SAMSUNG-1013, ¶[0065]. Per Bharadwaj, HE-WLAN preambles can be used to schedule multiple devices" for single-user simultaneous transmission and/or MU-MIMO transmissions. *Id.*; *see also id.*, ¶[0069]; SAMSUNG-1003, ¶166. Bharadwaj also teaches that the first WLAN signaling field (i.e., the HE-SIG-A) includes information to decode the second WLAN signaling field (i.e., the HE-SIG-B). SAMSUNG-1013, ¶¶[0069]-[0071]. The

> second WLAN signaling field (i.e., the HE-SIG-B) includes information usable by the station to "decode data in the data field" of the HE MU PPDU. *Id.*, ¶¶[0072], [0094]. Thus, a POSITA would have recognized, or found it obvious, that Bharadwaj teaches decoding the received HE MU PPDU based on information obtained from the preamble. SAMSUNG-1003, ¶166.

Pet. 70. The cited passages in Bharadwaj support Petitioner's contention that the cited art teaches all the elements of this limitation.

Patent Owner does not dispute the showing for this limitation. *See* Prelim Resp.

We determine that Bharadwaj teaches this limitation.

[1.5] wherein when a SIG-B compression field of the HE-SIG-A indicates full bandwidth multi User-Multiple Input Multiple Output (MU-MIMO) transmission, a format of user field(s) included in a user specific field of the HE-SIG-B is identified based on a number of MU-MIMO users indicated by a subfield of the HE-SIG-A,

Petitioner relies on Bharadwaj and Sun for this limitation. Pet. 70–72 (citing Ex. 1003 ¶ 167–168; Ex. 1013 ¶¶ 93, 96, 97, Figs. 21A, 21B; Ex. 1015 ¶ 84, Fig. 16B). Figures 21A and 21B of Bharadwaj, as annotated by Petitioner, are reproduced below.

	B18: B21	SIGB Number of Symbols/ Number of MU-MIMO Users	4	When SIGB compression field=0, indicates the number of HE-SIG-B symbols. Set to n for n+1 HE-SIG-B symbol, where n = 0, 1, 2,.....15 When SIGB compression field=1, indicates the number of MU-MIMO users minus1.
Two parts of HE-SIG-A	**Bits**	**Field**	**# of bits**	**Description**
HE-SIG-A1	B22	SIGB Compression	1	Set to 1 for full BW MU-MIMO. Set to 0 otherwise.

SAMSUNG-1013, FIGS. 21A-B (annotated)

Id. at 71. Figures 21A and 21B depict, "a HE-SIG-A field contents for a HE MU PPDU for supporting preamble design aspects for HE WLANs." Ex. 1013 ¶ 51. The Petition provides:

> Bharadwaj teaches that full bandwidth is indicated by the SIGB Compression bit being set to 1 in the HE-SIG-A. SAMSUNG-1013, FIGS. 21A-B, shown [above].
>
> . . . .
>
> When SIGB compression is set to 1, the "SIGB Number of Symbols/Number of MU-MIMO Users" field indicates the number of MU-MIMO users. *Id*. Bharadwaj also teaches that in the full bandwidth mode, no RU signal information is transmitted in a HE-SIG-B field. *Id*., ¶[0097]. A POSITA would have recognized, or found it obvious, therefore, that the number of MU-MIMO users was determined from the HE-SIG-A field when in full bandwidth. SAMSUNG-1003, ¶¶167-168.
>
> Bharadwaj also describes that "the station may differentiate between SU and MU-MIMO allocations." Bharadwaj, ¶[0096]; SAMSUNG-1003, ¶¶167-168. In the combination, as described [below], Bharadwaj differentiates the MU-MIMO user block from the SU (non-MU-MIMO) user block based on the number of MU-MIMO users identified in the HE-SIG-A field, where the MU-MIMO user block includes a spatial configuration subfield, and the SU (non-MU-MIMO) user block includes an Nsts subfield and a TxBF subfield. SAMSUNG-1013, ¶[0093]; SAMSUNG-1015, ¶[0084], FIG. 16B; *supra*, §IV.C.1-2. A POSITA would have understood and found it obvious that after Bharadwaj identifies the number of MU-MIMO users, it would have identified the corresponding format for the HE-SIG-B user field, as taught by both Bharadwaj (MU-MIMO) and Sun (non-MU-MIMO). SAMSUNG-1003, ¶¶167-168.

Pet. 70–72. The cited passages and figures in Bharadwaj and Sun support Petitioner's contention that the cited art teaches all the elements of this limitation.

Although Patent Owner purports to dispute Petitioner's contentions with respect to limitation 1.5 (*see* Prelim. Resp. 16), Patent Owner's argument appears directed to the "single user" subject matter in limitation 1.7, which we address further below.

We determine that the combination of Bharadwaj and Sun teaches this limitation.

[1.6] wherein when the number of MU-MIMO users indicates two or more users, the user specific field of the HE-SIG-B includes user fields for MU-MIMO allocation, and

Petitioner relies on Bharadwaj for teaching all the elements of this limitation. Pet. 72–73 (citing Ex. 1003 ¶ 169–170; Ex. 1013 ¶¶ 85–87, 93, 118, 119, Figs. 3, 5, 9, 9A, 9B). Figure 5 of Bharadwaj, as annotated by Petitioner, is reproduced below.

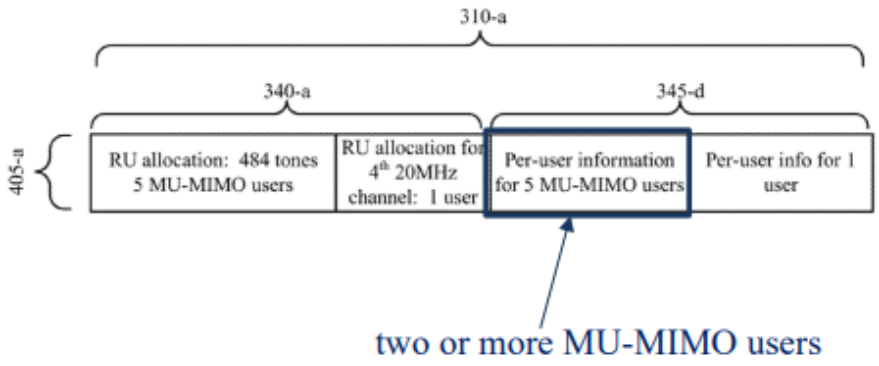

SAMSUNG-1013, FIG. 5 (annotated)

Id. at 72. Figure 5 depicts "an example of aspects of a WLAN protocol data unit for supporting preamble design aspects for HE WLANs." Ex. 1013 ¶ 34. The Petition provides:

> In Bharadwaj, when the number of MU-MIMO users is two or more, the HE-SIG-B field includes user fields for MU-MIMO allocation. For example, Bharadwaj describes the HE-SIG-B field includes user blocks, as shown in FIG. 5.

> . . . .
>
> User blocks 345-d each include per user information for MU-MIMO users. SAMSUNG-1013, ¶¶[0085]-[0087], FIGS. 3, 5, 8 (full bandwidth mode); see also *id*., ¶¶[0118]-[0119], FIGS. 9A-B.
>
> Bharadwaj also teaches that the "user field for an MU-MIMO allocation, e.g. in a HE-SIG-B field, may include a spatial configuration subfield of 4 bits indicating the number of spatial streams for each multiplexed STA, the index of the spatial stream, and the total number of spatial streams." SAMSUNG-1013, ¶[0093].

Pet. 72–73. The cited passages and figures in Bharadwaj support Petitioner's contention that the cited art teaches all the elements of this limitation.

Patent Owner does not dispute the showing for this limitation. *See* Prelim Resp.

We determine that Bharadwaj teaches this limitation.

[1.7] wherein when the number of MU-MIMO users indicates a single user, the user specific field of the HE-SIG-B includes one user field for non-MU-MIMO allocation.

Petitioner relies on Bharadwaj and Sun for this limitation. Pet. 73–74 (citing Ex. 1003 ¶ 171–172; Ex. 1013 ¶¶ 85, 87, Figs. 3, 5, 8; Ex. 1015 ¶¶ 72, 73, Figs. 13A, 13B). Figure 5 of Bharadwaj, as annotated by Petitioner, is reproduced below.

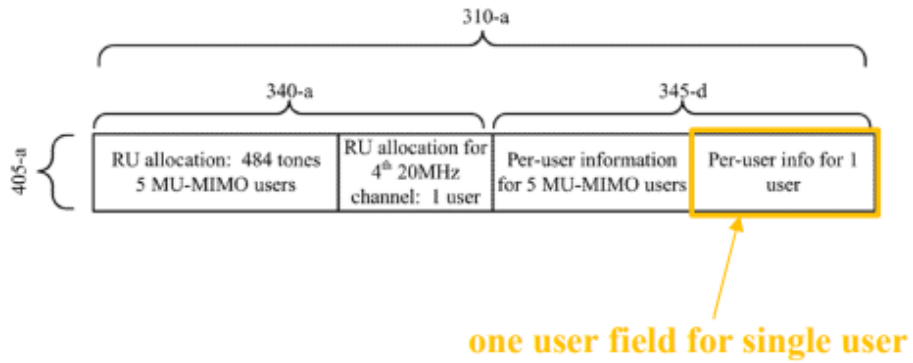

SAMSUNG-1013, FIG. 5 (annotated)

Id. at 73. Figure 5 depicts "an example of aspects of a WLAN protocol data unit for supporting preamble design aspects for HE WLANs." Ex. 1013 ¶ 34. The Petition provides:

> Bharadwaj describes that when the number of MU-MIMO users indicates a single user, the HE-SIG-B field includes a user-specific field for non-MU-MIMO (SU) allocation for one user. For example, Bharadwaj describes the HE-SIG-B field includes user block for a single user, as shown in FIG. 5.
>
> . . . .
>
> SAMSUNG-1013, ¶¶[0086] ("User blocks 345-d and 345-e each include … per-user information for SU users in user blocks."), [0085], [0087], FIGS. 3, 5, 8 (full bandwidth mode).

Pet. 73–74. The cited passages and figures in Bharadwaj support Petitioner's contentions.

Figures 13A and 13B of Sun, as annotated by Petitioner, are reproduced below.

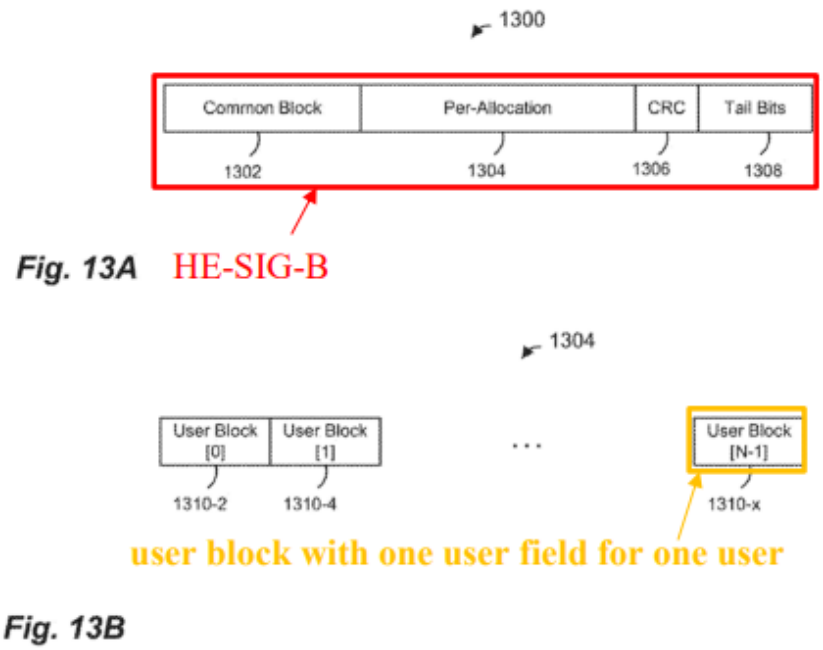

SAMSUNG-1015, FIGS. 13A-B (annotated)

Pet. 74. Figure 13A depicts "a signal field" and Figure 13B depicts, "a per-allocation portion of the signal field of FIG. 13A." Ex. 1015 ¶¶ 17, 18. The Petition provides:

> In the combination, Sun also describes the HE-SIG-B as including "***one*** or more user blocks 1310 respectively corresponding to ***one*** or more users (e.g., ***one*** or more client stations 25) that are scheduled to receive data." SAMSUNG-1015, ¶[0073] (emphasis added). When a single user is indicated, a single user block 1310 would thus provide a user field for a single user. *Id.*; SAMSUNG-1003, ¶¶171-172. The HE-SIG-B and user blocks are illustrated in FIGS. 13A-B, reproduced below. SAMSUNG-1015, ¶¶[0072]-[0073], FIGS. 13A-B.

Pet. 74. The cited passages and figures in Sun support Petitioner's contentions.

Patent Owner challenges the showing for this limitation. Prelim. Resp. 16–18. Patent Owner contends that "the Petition does not explain why

these disclosures . . . teach or suggest full bandwidth ***MU***-MIMO transmission ***for a single user***." *Id*. at 17 (emphasis added). Specifically, Patent Owner contends that "where Figure 5 of Bharadwaj accounts for a ***single user*** (e.g., as expressed in the right-hand portion of object 345-D of Figure 5 that the Petition maps), it is for a '***single user' (SU) transmission*** which does not use ***MU***-MIMO techniques and never described, in either the Figure or in the text of Bharadwaj, as for ***MU***-MIMO transmission." *Id*. (emphasis added). On this record, we do not see how Patent Owner's contentions distinguish the claims from the prior art. The limitation recites that when there is a ***single user,*** the user specific field of the HE-SIG-B includes one user field for ***non-MU***-MIMO allocation. As shown in the above quoted passages and figures from the Petition, the cited art teaches this limitation. We reject Patent Owner's argument.

We determine that the combination of Bharadwaj and Sun teaches this limitation.

Motivation to Combine the Teachings of Bharadwaj and Sun

With regard to combining the teachings of Bharadwaj and Sun, the Petition provides:

> Bharadwaj describes 1) in full bandwidth, determining the number of MU-MIMO users from a HE-SIG-A field, and 2) that the user field in HE-SIG-B for a MU-MIMO allocation indicates a spatial configuration for a number of users indicated by the common field of the HE-SIG-A. Bharadwaj, however, does not expressly disclose the format of the user field in HE-SIG-B for single-user allocation. In the same field of endeavor, Sun teaches that the user specific field of the HE-SIG-B has two possible structures: one for the single-user mode and one for the multi-user mode. **In the Bharadwaj-Sun combination ("Bharadwaj/Sun"), it would have been obvious to apply to Bharadwaj the format for the user field for the non-MU-**

> **MIMO (SU) allocation, as suggested by Sun, based on the number of users determined from the HE-SIG-A field indicating a single user.** SAMSUNG-1003, ¶152.

Pet. 61 (emphasis added). With regard to the motivation to combine these teachings, the Petition provides:

> As an initial matter, Bharadwaj and Sun are both analogous art to the '210 Patent in that that they are both concerned with the design of the PHY data unit for supporting MU-MIMO transmissions in the downlink. SAMSUNG-1003, ¶¶153-158. . . . In addition, both Bharadwaj and Sun describe MU-MIMO downlink PHY data unit structures in the context of 802.11ax. SAMSUNG-1013, ¶[0064]; SAMSUNG-1015, ¶[0031]; SAMSUNG-1003, ¶¶153-158.
>
> . . . .
>
> [A] POSITA implementing Bharadwaj's preamble designs would have been motivated to look to another reference, like Sun, for an understanding of the format of the user field that would support non-MU-MIMO allocations and the single-user transmission scenario. A POSITA would have combined the teachings of Bharadwaj with Sun to realize implementation details for the HE-SIG-A and HE-SIG-B fields of the HE MU PPDU to better support both MU-MIMO and non-MU-MIMO allocations. SAMSUNG-1003, ¶¶153-158.
>
> . . . .
>
> A POSITA would have found it obvious to look to Sun for modifying Bharadwaj to include the user field format for SU (non-MU-MIMO) allocation to complement Bharadwaj's disclosure of the MU-MIMO user field format and to provide a more complete system that would allow HE MU PPDUs to support both MU-MIMO allocations for multiple users and non-MU-MIMO allocations for a single user. SAMSUNG-1003, ¶¶153-158.

> The combination also would have been obvious and predictable for at least the following reasons:
>
> 1) both Bharadwaj and Sun describe designs for a PHY data unit (or PPDU) to support communications between an AP and a station within a high-efficiency Wi-Fi network, consistent with 802.11ax;
>
> 2) both Bharadwaj and Sun describe the PPDU design for supporting MU-MIMO downlink transmission as including HE-SIG-A and HE-SIG-B fields; and
>
> 3) Bharadwaj already describes the format for the user field for the MU-MIMO allocation, while also recognizing the single-user scenario, and the combination merely involves the addition to Bharadwaj of the user field format for the single-user allocation, as taught by Sun. SAMSUNG-1003, ¶¶153-158.
>
> The combination is obvious also because elements of the combined system would each perform similar functions they had been known to perform in similar contexts outside the combination. SAMSUNG-1003, ¶¶153-158.
>
> . . . .
>
> A POSITA would have reasonably expected success implementing the combination, especially considering the substantially similar 802.11ax techniques described in each reference. SAMSUNG-1003, ¶¶153-158. Additionally, combining the teachings of Bharadwaj with Sun would have merely involved combining prior art elements according to known methods to yield predictable results. SAMSUNG-1003, ¶¶153-158.

Id. at 62–65.

Patent Owner does not challenge the showing on motivation to combine the relevant teachings of Bharadwaj and Sun. *See* Prelim. Resp.

We determine that Petitioner has articulated and supported a motivation to combine the relevant teachings of Bharadwaj and Sun.

Summary as to Independent Claim 1

Petitioner has shown that the combination of Bharadwaj and Sun teaches or suggests all the limitations of claim 1 notwithstanding Patent Owner's arguments. Petitioner provides articulated reasoning with rational underpinnings to support combining the relevant teachings of Bharadwaj and Sun. We determine that there is a reasonable likelihood that Petitioner will prevail with respect to the unpatentability of claim 1.[14]

4. Independent Claim 6

Independent claim 6 is a method claim with limitations that are commensurate with the limitations of independent device claim 1. For claim 6, the Petitioner relies on its showing for claim 1. *See* Pet. 79–80. For claim 6, Patent Owner presents the same arguments as for claim 1. *See* Prelim. Resp. 16–18. We determine that Petitioner's showing for claim 6 is persuasive and well-supported and reject Patent Owner's arguments for the reasons discussed above with regard to claim 1. Therefore, we determine that there is a reasonable likelihood that Petitioner will prevail with respect to the unpatentability of claim 6.

5. Dependent Claims 2–5 and 7–9

Petitioner also asserts that dependent claims 2–5 and 7–9 would have been obvious in view of a combination of the teachings of Bharadwaj and

---

[14] Thus, we determine that there is a reasonable likelihood that the Petitioner will prevail with respect to at least one of the claims challenged in the Petition pursuant to 35 U.S.C. § 314 and that *inter partes* review should be instituted. Accordingly, we institute as to all the challenged claims and all the challenges raised in the Petition. 37 C.F.R. § 42.108(a) ("When instituting *inter partes* review, the Board will authorize the review to proceed on all of the challenged claims and on all grounds of unpatentability asserted for each claim.").

Sun. Pet. 1, 74–79, 80–81. The Petition provides a detailed and supported showing that the additional limitations recited in these dependent claims 2–5 are taught by Bharadwaj and Sun. *Id.*

Patent Owner does not dispute the showing as to the dependent claims. *See* Prelim. Resp.

We determine that there is a reasonable likelihood that Petitioner will prevail with respect to the unpatentability of claims 2–5 and 7–9.

III. CONCLUSION

For the foregoing reasons, we determine that there is a reasonable likelihood that Petitioner will prevail in its challenge with respect to claims 1–9 of the ’210 patent as obvious in view of the combination of Bharadwaj and Sun (Ground 2). Pursuant to *SAS Institute Inc. v. Iancu*, 584 U.S. 357, 364–65 (2018) and 37 C.F.R. § 42.108(a) providing that the Board must institute on all grounds or none, we determine that trial should be instituted on claims 1–9 of the ’210 patent on all the grounds asserted in the Petition.

IV. ORDER

Upon consideration of the record before us, it is:

ORDERED that, pursuant to 35 U.S.C. § 314(a), an *inter partes* review of claims 1–9 of U.S. Patent No. 11,159,210 B2 is instituted with respect the grounds set forth in the Petition (*see* Pet. 1); and

FURTHER ORDERED that, pursuant to 35 U.S.C. § 314(c) and 37 C.F.R. § 42.4(b), *inter partes* review of U.S. Patent No. 11,159,210 B2 shall commence on the entry date of this Order, and notice is hereby given of the institution of a trial.

FOR PETITIONER:

W. Karl Renner
Jeremy Monaldo
Nicholas Stephens
Rishi Gupta
FISH & RICHARDSON P.C.
axf-ptab@fr.com
jjm@fr.com
nstephens@fr.com
rgupta@fr.com

FOR PATENT OWNER:

Reza Mirzaie
Neil Rubin
Philip Wang
RUSS AUGUST & KABAT
rmirzaie@raklaw.com
nrubin@raklaw.com
pwang@raklaw.com

APPENDIX CJ

SUMMARY REPORTS & MINUTES OF 802.11 WG SESSIONS

IEEE 802.11 WLAN WORKING GROUP SESSIONS

As our sessions are open to the public, all interested parties are welcome to attend IEEE P802.11 Working Group sessions, for which there is a registration fee, to defray the cost of the session. At Plenary sessions this is administered by the IEEE P802 LMSC organization. Whereas, the Interim sessions are normally managed by our sponsoring host. This is in-addition to your individual hotel accommodation, and travel expenses. Click here to view Example Plenary and Interim Session Agenda.

Session	Date	Month	File URL or Doc# Report	Minutes	Location	Place	Type
For Year 2026							
215	11th - 16th	January	Report		Fairmont Empress	Victoria BC Canada	Interim
For Year 2025							
214	9th - 14th	November	Report	Minutes	Marriott Marquis Queen's Park	Bangkok Thailand	Plenary
213	13th - 19th	September	Report	Minutes	Hilton Waikoloa Village	Waikoloa HI USA	Interim
212	27th - 1st	Jul / Aug	Report	Minutes	Melia Castilla Hotel	Madrid Spain	Plenary
211	11th - 16th	May	Report	Minutes	Warsaw Presendential Hotel	Warsaw Poland	Interim
210	9th - 14th	March	Report	Minutes	Hilton Atlanta	Atlanta GA USA	Plenary
209	12th - 17th	January	Report	Minutes	Kobe Convention Center	Kobe Japan	Interim
For Year 2024							
208	10th - 15th	November	Report	Minutes	Hyatt Regency	Vancouver BC Canada	Plenary
207	8th - 13th	September	Report	Minutes	Hilton Waikoloa Village	Waikoloa HI USA	Interim
206	14th - 19th	July	Report	Minutes	Sheraton Le Centre	Montreal QC Canada	Plenary
205	12th - 17th	May	Report	Minutes	Warsaw Marriott	Warsaw Poland	Interim
204	10th - 15th	March	Report	Minutes	Hyatt Regency	Denver CO USA	Plenary
203	14th - 19th	January	Report	Minutes	Hilton Panama	Panama City Panama	Interim
For Year 2023							
202	12th - 17th	November	Report	Minutes	Hilton Hawaiian Village Waikiki	Honolulu HI USA	Plenary
201	10th - 15th	September	Report	Minutes	Grand Hyatt	Atlanta GA USA	Interim
200	9th - 14th	July	Report	Minutes	Estrel	Berlin Germany	Plenary
199	14th - 19th	May	Report	Minutes	Hilton Orlando Lake Buena Vista	Orlando FL USA	Interim
198	12th - 17th	March	Report	Minutes	Hilton Atlanta	Atlanta GA USA	Plenary
197	15th - 20th	January	Report	Minutes	Hilton Inner Harbor	Baltimore MD USA	Interim
For Year 2022							
196	13th - 18th	November	Report	Minutes	Marriott Marquis Queen's Park	Bangkok Thailand	Plenary
195	11th - 16th	September	Report	Minutes	Hilton Waikoloa Village	Waikoloa HI USA	Interim
194	10th - 15th	July	Report	Minutes	Marriott	Montreal QC Canada	Plenary
193	8th - 13th	May	Report	Minutes	Online	Online	Interim
192	7th - 15th	March	Report	Minutes	Online	Online	Plenary
191	17th - 25th	January	Report	Minutes	Online	Online	Interim
For Year 2021							
190	8th - 16th	November	Report	Minutes	Online	Online	Plenary
189	13th - 21st	September	Report	Minutes	Online	Online	Interim
188	12th - 20th	July	Report	Minutes	Online	Online	Plenary
187	10th - 18th	May	Report	Minutes	Online	Online	Interim
186	8th - 16th	March	Report	Minutes	Online	Online	Plenary
185	11th - 15th	January	Report	Minutes	Online	Online	Interim
For Year 2020							
184	2nd - 10th	November	Report	Minutes	Online	Online	Plenary
183	13th - 17th	September	Report	Minutes	Online	Online	Interim
182	13th - 16th	July	Report	Minutes	Online	Online	Plenary
181	10th - 15th	May	Cancelled Session		Marriott	Warsaw Poland	Interim
180	15th - 20th	March	Cancelled Session		Hilton Atlanta	Atlanta GA USA	Plenary

n/a Denotes - Not Applicable.

IEEE 802.11 WLAN WORKING GROUP SESSIONS

As our sessions are open to the public, all interested parties are welcome to attend IEEE P802.11 Working Group sessions, for which there is a registration fee, to defray the cost of the session. At Plenary sessions this is administered by the IEEE P802 LMSC organization. Whereas, the Interim sessions are normally managed by our sponsoring host. This is in-addition to your individual hotel accommodation, and travel expenses. Click here to view Example Plenary and Interim Session Agenda.

Session	Date	Month	File URL or Doc# Report	Minutes	Location	Place	Type
179	12th - 17th	January	Report	Minutes	Hotel Irvine	Irvine CA USA	Interim
For Year 2019							
178	11th - 15th	November	Report	Minutes	Hilton Waikoloa Village	Waikoloa HI USA	Plenary
177	16th - 20th	September	Report	Minutes	JW Marriott	Hanoi Vietnam	Interim
176	15th - 19th	July	Report	Minutes	Austria Center Vienna	Vienna Austria	Plenary
175	13th - 17th	May	Report	Minutes	Grand Hyatt	Atlanta GA USA	Interim
174	11th - 15th	March	Report	Minutes	Hyatt Regency	Vancouver BC Canada	Plenary
173	14th - 18th	January	Report	Minutes	Hilton at the ball park	St Louis MO USA	Interim
For Year 2018							
172	12th - 16th	November	Report	Minutes	Marriott Marquis Queen's Park	Bangkok Thailand	Plenary
171	10th - 14th	September	Report	Minutes	Hilton Waikoloa Village	Waikoloa HI USA	Interim
170	9th - 13th	July	Report	Minutes	Manchester Grand Hyatt	San Diego CA USA	Plenary
169	7th - 11th	May	Report	Minutes	Marriott	Warsaw Poland	Interim
168	5th - 9th	March	Report	Minutes	Hyatt Regency O'Hare	Rosemont IL USA	Plenary
167	15th - 19th	January	Report	Minutes	Hotel Irvine	Irvine CA USA	Interim
For Year 2017							
166	6th - 10th	November	Report	Minutes	Caribe Royale	Orlando FL USA	Plenary
165	11th - 15th	September	Report	Minutes	Hilton Waikoloa Village	Waikoloa HI USA	Interim
164	9th - 14th	July	Report	Minutes	Estrel	Berlin Germany	Plenary
163	8th - 12th	May	Report	Minutes	Lotte	Daejeon South Korea	Interim
162	13th - 17th	March	Report	Minutes	Hyatt Regency	Vancouver BC Canada	Plenary
161	16th - 20th	January	Report	Minutes	Grand Hyatt	Atlanta GA USA	Interim
For Year 2016							
160	7th - 11th	November	Report	Minutes	Grand Hyatt	San Antonio TX USA	Plenary
159	12th - 16th	September	Report	Minutes	Marriott	Warsaw Poland	Interim
158	25th - 29th	July	Report	Minutes	Manchester Grand Hyatt	San Diego CA USA	Plenary
157	16th - 20th	May	Report	Minutes	Hilton Waikoloa Village	Waikoloa HI USA	Interim
156	14th - 18th	March	Report	Minutes	Venetian	Macau	Plenary
155.5	27th - 27th	January	Report	Minutes	Heilongjiang Trade Union Hotel	Harbin China	Interim
155	18th - 22nd	January	Report	Minutes	Hyatt Regency	Atlanta GA USA	Interim
For Year 2015							
154	9th - 13th	November	Report	Minutes	Hyatt Regency	Dallas TX USA	Plenary
153	14th - 18th	September	Report	Minutes	Centara Grand	Bangkok Thailand	Interim
152	13th - 17th	July	Report	Minutes	Hilton Waikoloa Village	Waikoloa HI USA	Plenary
151.5	19th - 20th	May	Report	Minutes	Zhuhai Dehan	Zhuhai China	Interim
151	11th - 15th	May	Report	Minutes	Hyatt Regency	Vancouver BC Canada	Interim
150	9th - 13th	March	Report	Minutes	Estrel	Berlin Germany	Plenary
149.5	21st - 22nd	January	Report	Minutes	Kempinski	Xiamen China	Interim
149	11th - 16th	January	Report	Minutes	Hyatt Regency	Atlanta GA USA	Interim
For Year 2014							
148	2nd - 7th	November	Report	Minutes	Grand Hyatt	San Antonio TX USA	Plenary
147	14th - 19th	September	Report	Minutes	Hilton Athens	Athens Greece	Interim
146.5	9th - 10th	September	Report	Minutes	Sofitel Luxury	Chengdu China	Interim
146	13th - 18th	July	Report	Minutes	Manchester Hyatt	San Diego CA USA	Plenary
145.5	21st - 22nd	May	Report	Minutes	New Century	Beijing China	Interim
145	11th - 16th	May	Report	Minutes	Hilton Waikoloa Village	Waikoloa HI USA	Interim

n/a Denotes - Not Applicable.

IEEE 802.11 WLAN WORKING GROUP SESSIONS

As our sessions are open to the public, all interested parties are welcome to attend IEEE P802.11 Working Group sessions, for which there is a registration fee, to defray the cost of the session. At Plenary sessions this is administered by the IEEE P802 LMSC organization. Whereas, the Interim sessions are normally managed by our sponsoring host. This is in-addition to your individual hotel accommodation, and travel expenses. Click here to view Example Plenary and Interim Session Agenda.

Session	Date	Month	File URL or Doc# Report	Minutes	Location	Place	Type
144	16th - 21st	March	Report	Minutes	China World	Beijing China	Plenary
143.5	8th - 9th	January	Report	Minutes	Howard Johnson Resort	Sanya China	Interim
143	19th - 24th	January	Report	Minutes	Hyatt Century Plaza	Los Angeles CA USA	Interim
For Year 2013							
142	10th - 15th	November	Report	Minutes	Hyatt Regency	Dallas TX USA	Plenary
141	15th - 20th	September	Report	Minutes	Zhong Shan	Nanjing China	Interim
140	14th - 19th	July	Report	Minutes	ITU Headquarters	Geneva Switzerland	Plenary
139	11th - 17th	May	Report	Minutes	Hilton Waikoloa Village	Waikoloa HI USA	Interim
138.5	24th - 25th	April	Report	Minutes	Nikko New Century	Beijing China	Interim
138	17th - 22nd	March	Report	Minutes	Caribe Royale	Orlando FL USA	Plenary
137.5	23rd - 24th	January	Report	Minutes	Grand Mercure Oriental Ginza	Shenzhen China	Interim
137	12th - 18th	January	Report	Minutes	Hyatt Regency	Vancouver BC Canada	Interim
For Year 2012							
136	12th - 16th	November	Report	Minutes	Grand Hyatt	San Antonio TX USA	Plenary
135.5	26th - 27th	September	Report	Minutes	Nikko New Century	Beijing China	Interim
135	16th - 21st	September	Report	Minutes	Hyatt Regency	Indian Wells CA USA	Interim
134	14th - 20th	July	Report	Minutes	Manchester Grand Hyatt	San Diego CA USA	Plenary
133	13th - 18th	May	Report	Minutes	Hyatt Regency	Atlanta GA USA	Interim
132	11th - 16th	March	Report	Minutes	Hilton Waikoloa Village	Waikoloa HI USA	Plenary
131	15th - 20th	January	Report	Minutes	Hyatt Regency	Jacksonville FL USA	Interim
For Year 2011							
130	6th - 11th	November	Report	Minutes	Hyatt Regency	Atlanta GA USA	Plenary
129	18th - 23rd	September	Report	Minutes	Okinawa Convention Center	Okinawa Japan	Interim
128	17th - 22nd	July	Report	Minutes	Hyatt Regency	San Francisco CA USA	Plenary
127	8th - 13th	May	Report	Minutes	Hyatt Grand Champion	Indian Wells CA USA	Interim
126	13th - 18th	March	Report	Minutes	Marina Bay Sands	Singapore	Plenary
125	16th - 21st	January	Report	Minutes	Hyatt Century Plaza	Los Angeles CA USA	Interim
For Year 2010							
124	7th - 12th	November	Report	Minutes	Hyatt Regency	Dallas TX USA	Plenary
123	12th - 17th	September	Report	Minutes	Hilton Waikoloa Village	Waikoloa HI USA	Interim
122	11th - 16th	July	Report	Minutes	Manchester Grand Hyatt	San Diego CA USA	Plenary
121	16th - 21st	May	Report	Minutes	China World	Beijing PRC	Interim
120	14th - 19th	March	Report	Minutes	Caribe Royale	Orlando FL USA	Plenary
119	17th - 22nd	January	Report	Minutes	Hyatt Century Plaza	Los Angeles CA USA	Interim
For Year 2009							
118	15th - 20th	November	Report	Minutes	Hyatt Regency	Atlanta GA USA	Plenary
117	20th - 25th	September	Report	Minutes	Hilton Waikoloa Village	Waikoloa HI USA	Interim
116	12th - 17th	July	Report	Minutes	Hyatt Regency	San Francisco CA USA	Plenary
115	10th - 15th	May	Report	Minutes	Fairmont The Queen Elizabeth	Montreal PQ Canada	Interim
114	8th - 13th	March	Report	Minutes	Hyatt Regency	Vancouver BC Canada	Plenary
113	18th - 23rd	January	Report	Minutes	Hyatt Century Plaza	Los Angeles CA USA	Interim
For Year 2008							
112	9th - 14th	November	Report	Minutes	Hyatt Regency	Dallas TX USA	Plenary
111	7th - 12th	September	Report	Minutes	Hilton Waikoloa Village	Waikoloa HI USA	Interim
110	13th - 18th	July	Report	Minutes	Hyatt Regency	Denver CO USA	Plenary
109	11th - 16th	May	Report	Minutes	Hyatt Regency	Jacksonville FL USA	Interim

n/a Denotes - Not Applicable.

IEEE 802.11 WLAN WORKING GROUP SESSIONS

As our sessions are open to the public, all interested parties are welcome to attend IEEE P802.11 Working Group sessions, for which there is a registration fee, to defray the cost of the session. At Plenary sessions this is administered by the IEEE P802 LMSC organization. Whereas, the Interim sessions are normally managed by our sponsoring host. This is in-addition to your individual hotel accommodation, and travel expenses. Click here to view Example Plenary and Interim Session Agenda.

Session	Date	Month	File URL or Doc# Report	Minutes	Location	Place	Type
108	16th - 21st	March	Report	Minutes	Caribe Royale	Orlando FL USA	Plenary
107	13th - 18th	January	Report	Minutes	Howard Plaza	Taipei Taiwan ROC	Interim
For Year 2007							
106	11th - 16th	November	Report	Minutes	Hyatt Regency	Atlanta GA USA	Plenary
105	16th - 21st	September	Report	Minutes	Hilton Waikoloa Village	Waikoloa HI USA	Interim
104	15th - 20th	July	Report	Minutes	Hyatt Regency	San Francisco CA USA	Plenary
103	13th - 18th	May	Report	Minutes	Fairmont The Queen Elizabeth	Montreal PQ Canada	Interim
102	11th - 16th	March	Report	Minutes	Caribe Royale	Orlando FL USA	Plenary
101	14th - 19th	January	Report	Minutes	Hilton London Metropole	London United Kingdom	Interim
For Year 2006							
100	13th - 17th	November	Report	Minutes	Hyatt Regency	Dallas TX USA	Plenary
99	17th - 22nd	September	Report	Minutes	Exhibition Convention Centre	Melbourne Victoria Australia	Interim
98	16th - 21st	July	Report	Minutes	Manchester Grand Hyatt	San Diego CA USA	Plenary
97	15th - 19th	May	Report	Minutes	Hyatt Regency	Jacksonville FL USA	Interim
96	6th - 10th	March	Report	Minutes	Hyatt Regency	Denver CO USA	Plenary
95	15th - 20th	January	Report	Minutes	Hilton Waikoloa Village	Waikoloa HI USA	Interim
For Year 2005							
94	13th - 18th	November	Report	Minutes	Hyatt Regency	Vancouver BC Canada	Plenary
93	18th - 23rd	September	Report	Minutes	Hyatt Regency	Garden Grove CA USA	Interim
92	17th - 22nd	July	Report	Minutes	Hyatt Regency	San Francisco CA USA	Plenary
91	15th - 20th	May	Report	Minutes	Cairns Convention Centre	Cairns Queensland Australia	Interim
90	13th - 18th	March	Report	Minutes	Hyatt Regency	Atlanta GA USA	Plenary
89	16th - 21st	January	Report	Minutes	Hyatt Regency	Monterey CA USA	Interim
For Year 2004							
88	15th - 19th	November	Report	Minutes	Hyatt Regency	San Antonio TX USA	Plenary
87	12th - 17th	September	Report	Minutes	Estrel Hotel Berlin	Berlin Germany	Interim
86	12th - 16th	July	Report	Minutes	Portland Hilton	Portland OR USA	Plenary
85	9th - 14th	May	Report	Minutes	Hyatt Regency	Garden Grove CA USA	Interim
84	14th - 19th	March	Report	Minutes	Hilton in Walt Disney World	Lake Buena Vista FL USA	Plenary
83	11th - 16th	January	Report	Minutes	Hyatt Regency	Vancouver BC Canada	Interim
For Year 2003							
82	10th - 14th	November	Report	Minutes	Hyatt Regency	Albuquerque NM USA	Plenary
81	15th - 19th	September	Report	Minutes	Swisstel The Stamford	Singapore	Interim
80	20th - 25th	July	Report	Minutes	Hyatt Regency	San Francisco CA USA	Plenary
79	12th - 16th	May	Report	Minutes	Hyatt Regency	Dallas/Ft Worth Airport TX USA	Interim
78	10th - 14th	March	Report	Minutes	Hyatt Regency	Dallas/Ft Worth Airport TX USA	Plenary
77	13th - 17th	January	Report	Minutes	Fort Lauderdale Marina Marriott	Fort Lauderdale FL USA	Interim
For Year 2002							
76	11th - 15th	November	Report	Minutes	Hyatt Regency	Kauai HI USA	Plenary
75	9th - 13th	September	Report	Minutes	Hyatt Regency	Monterey CA USA	Interim
74	8th - 12th	July	Report	Minutes	Hyatt Regency	Vancouver BC Canada	Plenary
73	13th - 17th	May	Report	Minutes	Wentworth Sydney Hotel	Sydney NSW Australia	Interim
72	11th - 15th	March	Report	Minutes	Hyatt Regency	St. Louis MO USA	Plenary
71	21st - 25th	January	Report	Minutes	Wyndham Anatole Hotel	Dallas TX USA	Interim
For Year 2001							
70	11th - 16th	November	Report	Minutes	Hyatt Regency	Austin TX USA	Plenary

n/a Denotes - Not Applicable.

IEEE 802.11 WLAN WORKING GROUP SESSIONS

As our sessions are open to the public, all interested parties are welcome to attend IEEE P802.11 Working Group sessions, for which there is a registration fee, to defray the cost of the session. At Plenary sessions this is administered by the IEEE P802 LMSC organization. Whereas, the Interim sessions are normally managed by our sponsoring host. This is in-addition to your individual hotel accommodation, and travel expenses. Click here to view Example Plenary and Interim Session Agenda.

Session	Date	Month	File URL or Doc# Report	Minutes	Location	Place	Type
69	17th - 21st	September	Cancelled Session		Hyatt Regency	Bellevue WA USA	Interim
68	9th - 13th	July	Report	Minutes	Portland Marriott Downtown	Portland OR USA	Plenary
67	14th - 18th	May	Report	Minutes	Radisson at Universal Orlando	Orlando FL USA	Interim
66	12th - 16th	March	Report	Minutes	Marriott Resort	Hilton Head SC USA	Plenary
65	15th - 19th	January	Report	Minutes	Hyatt Regency Resort	Monterey CA USA	Interim
For Year 2000							
64	13th - 17th	November	Report	Minutes	Hyatt Regency	Tampa FL USA	Plenary
63	18th - 22nd	September	Report	Minutes	Radisson Resort Spa	Scottsdale AZ USA	Interim
62	10th - 14th	July	Report	Minutes	Hyatt Regency	La Jolla CA USA	Plenary
61	8th - 12th	May	Report	Minutes	Renaissance Madison Hotel	Seattle WA USA	Interim
60	6th - 10th	March	Report	Minutes	Hyatt Regency	Albuquerque NM USA	Plenary
59	10th - 14th	January	Report	Minutes	David Intercontinental Hotel	Tel Aviv Israel	Interim
For Year 1999							
58	8th - 12th	November	Report	Minutes	Hyatt Regency	Kauai HI USA	Plenary
57	13th - 17th	September	Report	Minutes	Hilton Sonoma County	Santa Rosa CA USA	Interim
56	5th - 9th	July	Report	Minutes	Queen Elizabeth	Montreal PQ Canada	Plenary
55	3rd - 7th	May	Report	Minutes	Makuhari Prince Hotel	Chiba Japan	Interim
54	8th - 12th	March	Report	Minutes	Hyatt Regency	Austin TX USA	Plenary
53	11th - 15th	January	Report	Minutes	Grosvenor	Lake Buena Vista FL USA	Interim
For Year 1998							
52	9th - 13th	November	n/a	Minutes	Hyatt Regency	Albuquerque NM USA	Plenary
51	1st - 1st	October	n/a	Minutes	Hyatt Regency	Atlanta GA USA	Special
50	14th - 18th	September	n/a	Minutes	Westford Regency Inn	Westford MA USA	Interim
49	6th - 11th	July	n/a	Minutes	Hyatt Regency	La Jolla CA USA	Plenary
48	19th - 21st	May	n/a	Minutes	Sheraton Grand	Irving TX USA	Special
47	8th - 9th	April	n/a	Minutes	Boston Marriott	Cambridge MA USA	Special
46	4th - 8th	May	n/a	Minutes	Holiday Inn	Utrecht Nederlands	Interim
45	9th - 13th	March	n/a	Minutes	Hyatt Regency	Irvine CA USA	Plenary
44	19th - 23rd	January	n/a	Minutes	Embassy Suites	Lynnwood WA USA	Interim
For Year 1997							
43	10th - 14th	November	n/a	Minutes	Queen Elizabeth	Montreal PQ Canada	Plenary
42	8th - 12th	September	n/a	Minutes	Grafton Radisson Edwardian	London United Kingdom	Interim
41	6th - 11th	July	n/a	Minutes	Hyatt Regency	Maui HI USA	Plenary
40	7th - 9th	May	n/a	Minutes	AMD Facility	Sunnyvale CA USA	Interim
39	10th - 14th	March	n/a	Minutes	Marriott	Irvine CA USA	Plenary
38	13th - 17th	January	n/a	Minutes	Harris Facility	Palm Bay FL USA	Interim
For Year 1996							
37	11th - 14th	November	n/a	Minutes	Hotel Vancouver	Vancouver BC Canada	Plenary
36	8th - 12th	July	n/a	Minutes	Various Campus Locations	Twente University Nederlands	Plenary
35	6th - 9th	May	n/a	Minutes	Westin	Waltham MA USA	Interim
34	11th - 15th	March	n/a	Minutes	Hyatt Regency	La Jolla CA USA	Plenary
33	8th - 12th	January	n/a	Minutes	Westgate Hotel	San Diego CA USA	Interim
For Year 1995							
32	6th - 9th	November	n/a	Minutes	Queen Elizabeth	Montreal PQ Canada	Plenary
31	28th - 31st	August	n/a	Minutes	Marriott	Schaumburg IL USA	Interim
30	10th - 13th	July	n/a	Minutes	Hyatt Regency	Maui HI USA	Plenary

n/a Denotes - Not Applicable.

IEEE 802.11 WLAN WORKING GROUP SESSIONS

As our sessions are open to the public, all interested parties are welcome to attend IEEE P802.11 Working Group sessions, for which there is a registration fee, to defray the cost of the session. At Plenary sessions this is administered by the IEEE P802 LMSC organization. Whereas, the Interim sessions are normally managed by our sponsoring host. This is in-addition to your individual hotel accommodation, and travel expenses. Click here to view Example Plenary and Interim Session Agenda.

Session	Date	Month	File URL or Doc# Report	Minutes	Location	Place	Type
29	8th - 11th	May	n/a	Minutes	Hilton Inn	Salt Lake City UT USA	Interim
28	6th - 10th	March	n/a	Minutes	Ramada Resort	West Palm Beach FL USA	Plenary
27	9th - 12th	January	n/a	Minutes	LeBaron	San Jose CA USA	Interim
For Year 1994							
26	7th - 11th	November	n/a	Minutes	Hyatt Regency	Incline Village NV USA	Plenary
25	29th - 1st	Aug / Sep	n/a	Minutes	Marriott Rivercenter	San Antonio TX USA	Interim
24	11th - 15th	July	n/a	Minutes	Walt Disney World Swan	Orlando FL USA	Plenary
23	9th - 12th	May	n/a	Minutes	Holiday Inn	Oshawa ON Canada	Interim
22	7th - 11th	March	n/a	Minutes	Hotel Vancouver	Vancouver BC Canada	Plenary
21	10th - 13th	January	n/a	Minutes	LeBaron	San Jose CA USA	Interim
For Year 1993							
20	8th - 12th	November	n/a	Minutes	Ramada	West Palm Beach FL USA	Plenary
19	20th - 23rd	September	n/a	Minutes	Wyndham Garden	Atlanta GA USA	Interim
18	12th - 15th	July	n/a	Minutes	Sheraton	Denver CO USA	Plenary
17	10th - 13th	May	n/a	Minutes	Holiday Inn	Wilmington DE USA	Interim
16	8th - 12th	March	n/a	Minutes	Omni Inner Harbor	Baltimore MD USA	Plenary
15	11th - 14th	January	n/a	Minutes	Ramada	Agoura Hills CA USA	Interim
For Year 1992							
14	9th - 12th	November	n/a	.doc .pdf	Hyatt Regency	La Jolla CA USA	Plenary
13	14th - 17th	September	n/a	.doc .pdf	Hilton	Dayton OH USA	Interim
12	6th - 9th	July	n/a	.doc .pdf	Radisson	Minneapolis MN USA	Plenary
11	11th - 14th	May	n/a	.doc .pdf	Holiday Inn	Leiden Nederlands	Interim
10	9th - 12th	March	n/a	.doc .pdf	Marriott	Irvine CA USA	Plenary
9	13th - 16th	January	n/a	.doc .pdf	Omni Europe	Chapel Hill NC USA	Interim
For Year 1991							
8	11th - 15th	November	n/a	.doc .pdf	Crown Sterling Suites	Ft. Lauderdale FL USA	Plenary
7	8th - 12th	September	n/a	.doc .pdf	Hyatt Regency	Palo Alto CA USA	Interim
6	8th - 11th	July	n/a	.doc .pdf	Hyatt Regency	Kauai HI USA	Plenary
5	6th - 9th	May	n/a	.doc .pdf	Marriott	Worcester MA USA	Interim
4	11th - 14th	March	n/a	.doc .pdf	Westin Resort	Hilton Head SC USA	Plenary
3	7th - 10th	January	n/a	.doc .pdf	Compri hotel	Gaithersburg MD USA	Interim
For Year 1990							
2	12th - 16th	November	n/a	.doc .pdf	Hyatt Regency	La Jolla CA USA	Plenary
1	10th - 14th	September	n/a	.doc .pdf	Holiday Inn	Oshawa ON Canada	Interim

n/a Denotes - Not Applicable.

Copyright (c), the Institute of Electrical and Electronics Engineers, Inc. (IEEE). All rights reserved.

This website may contain names, logos, designs, titles, words, or phrases that may constitute trademarks, service marks, or tradenames of the IEEE or other entities which may be registered in certain jurisdictions.