UNITED STATES INTERNATIONAL TRADE COMMISSION

Washington, D.C.

In the Matter of **CERTAIN HYDRODERMABRASION SYSTEMS AND COMPONENTS THEREOF**	**Inv. No. 337-TA-1408**

ORDER NO. 50: EXPLANATION OF CLAIM TERMS CONSTRUED IN ORDER NOS. 29 AND 32

(June 11, 2025)

Table of Contents

I. INTRODUCTION 1

II. ADOPTED CLAIM TERMS 1

A. Disputed Claim Terms of the ’287 Patent 1

1. “Fluid control member” 1

2. “Collection lumen” 9

3. “Handpiece” / “handpiece Assembly” 14

4. “Sequentially” 22

III. TERMS CONSTRUED IN THIS ORDER 26

IV. CONCLUSION 27

Aesthetic Management Partners, LLC et al v. HydraFacial
IPR2025-01169
HydraFacial Ex. 2166

Table of Abbreviations

Compl.	Complaint
CMBr.	Complainant's *Markman* Brief
RMBr.	Respondent's *Markman* Brief
PH JCCC	Post-Hearing Joint Claim Construction Chart
CXM	Complainant's *Markman* Exhibit
RXM	Respondent's *Markman* Exhibit
JXM	Joint *Markman* Exhibit
MHr'g Tr.	*Markman* Hearing Transcript

I. INTRODUCTION[1]

This Order contains the explanation of each adopted construction set forth in Order Nos. 29 and 32. (*See* Order No. 29 (Mar. 14, 2025); Order No. 32 (Mar. 19, 2025).) Shortly after the claim term "block" was found to be indefinite in Order No. 29, Complainant HydraFacial LLC f/k/a Edge Systems LLC ("Complainant") terminated, *inter alia*, all asserted claims that recite "block." (Motion Docket No. 1408-034 (Mar. 20, 2025); *see also* Order No. 34 (Mar. 26, 2025) (granting Complainant's motion for partial termination).)[2]

With respect to the claim term "fluid control member," this Order modifies the adopted construction set forth in Order No. 32, which is included as part of a discussion of "manifold system 24." (*See* Order No. 32 at 2.)

While the contents of the Notice of Investigation and of the "Applicable Law" section of Order No. 29 have not been repeated here, they nonetheless apply.

II. ADOPTED CLAIM TERMS

A. Disputed Claim Terms of the '287 Patent

1. "Fluid control member"

Claim Term	Complainant's Proposed Construction	Respondent's Proposed Construction	Adopted Construction
fluid control member	Subject to 35 U.S.C. § 112, ¶6. <u>Function</u>: "be in fluid communication with at	This term is indefinite and lacks written description.	Subject to 35 U.S.C. § 112, ¶6. Function: "be in fluid communication with at least

[1] The background, applicable law, description of the asserted patent, U.S. Patent No. 11,865,287 ("the '287 patent"), and definition of a person of ordinary skill in the art are discussed in Order No. 29, which is incorporated by reference herein in its entirety. Order No. 32 is also incorporated by reference herein in its entirety.

[2] Respondent Cartessa Aesthetics, LLC ("Respondent"), the only remaining respondent in this Investigation, did not oppose Complainant's motion for partial termination. (*See* Order No. 34 at 1 n.1.) Therefore, for all purposes, the arguments that were eliminated with respect to the claim term "block" are no longer in issue for any purposes. Any arguments pertaining to the same are also, therefore, waived.

Claim Term	Complainant's Proposed Construction	Respondent's Proposed Construction	Adopted Construction
'287 Patent Claim 11	least a first container and a second container" and "be in fluid communication with the handpiece assembly" <u>Structure</u>: "manifold system 24" ('287 Patent at 17:17–18:37; Figures 15A–15D), or "lumen 171" (18:15–18), or "valves, fluid lines, and the like" (18:38–42), and equivalents of these structures.	Alternatively, this term is subject to 35 U.S.C. § 112, ¶6. Its function is - be in fluid communication with at least a first container and a second container when the first container and the second container are connected to the fluid control member; and - be in fluid communication with the handpiece assembly. Its corresponding structure is a manifold or its equivalent.	a first container and a second container when the first container and the second container are connected to the fluid control member" and "be in fluid communication with the handpiece assembly" Structure: "manifold system 24" ('287 Patent at 17:17–18:37; Figures 15A–15D), "switches 29" (17:21-22), or "lumen 171" (18:15-18), or "valves, fluid lines, and the like" (18:38- 42), and equivalents of these structures.

a) Means-Plus-Function

If the term is not indefinite, the parties agree "fluid control member" should be subject to § 112 ¶ 6, and therefore interpreted as a means-plus-function term. "Means-plus-function claiming applies only to purely functional limitations that do not provide the structure that performs the recited function." *Phillips,* 425 F.3d at 1311. The first inquiry is "whether the words of the claim are understood by persons of ordinary skill in the art to have a sufficiently definite meaning as the name for structure." *Williamson v. Citrix Online*, 792 F.3d 1339, 1349 (Fed. Cir. 2015) (en banc in relevant part to "abandon characterizing as 'strong' the presumption that a limitation lacking the word 'means' is not subject to § 112, para. 6").

Here, no party has argued that a person of ordinary skill in the art would understand the term "fluid control member" to recite sufficiently definite structure, which is consistent with the parties' proposed constructions that the term be construed subject to § 112, paragraph 6. Respondent characterizes this claim term as "written as a descriptor plus 'member,'" a form that can support construing the term as means-plus-function. (RMBr. at 26-27 (citing *Mas-Hamilton Grp. v. LaGard, Inc.*, 156 F.3d 1206, 1215 (Fed. Cir. 1998) ("moveable link member" determined to be a means-plus-function term).)

"Fluid control member" will be construed subject to § 112, paragraph 6 because there is a lack of evidence that "fluid control member" has a well-understood structural meaning in the art.

Under § 112, paragraph 6, the functions proposed by the parties do not vary much, each reciting limitations of claim 11, which is copied below in relevant part:

> . . . a fluid control member that is configured to be in fluid communication with at least a first container and a second container when the first container and the second container are connected to the fluid control member;
>
> a handpiece assembly configured to contact a skin surface of a subject; . . .
>
> wherein when the handpiece assembly is connected to the console, the fluid control member is configured to be in fluid communication with the handpiece assembly;

(JXM-0001 at claim 11.)

Respondent's proposed construction more fully reflects the conditions when the proposed functions occur, i.e., "when the first container and the second container are connected to the fluid control member," and will therefore be adopted. Complainant appears to agree there is no material difference between the parties' proposed functions. (*See* CMBr. at 20 (describing the parties' proposed functions as "undisputed").) Regardless, Complainant has not argued that the fluid control member would "be in fluid communication with at least a first container and a

second container" other than "when the first container and the second container are connected to the fluid control member" as such a scenario would seem illogical.

The parties' dispute revolves around the corresponding structures that would perform the claimed functions. Although Complainant seeks a broader list of structures, these structures are disclosed in the specification. (CMBr. at 20–22.) Respondent improperly seeks to limit the corresponding structure to only the manifold or its equivalent. (RMBr. at 26–28.)

As Complainant points out, the corresponding structures described in the specification include the "manifold system 24" (JXM-0001 at 17:17-18:37, Figs. 15A-15D), the lumen 171 (18:15-18) and/or other structures such as "valves, fluid lines, and the like" (18:38-42).[3] (CMBr. at 21.) The specification also discloses "switches 29" that could "control flow." (JXM-0001 at 17:21-22.) For example, with respect to the manifold system and switches, the specification discloses:

> A ***manifold system 24*** can ***control the flow of treatment material*** from containers 26 into and through the line 20.
>
> * * *
>
> As illustrated in FIG. 1, the console 12 comprises the ***manifold system 24*** designed to draw treatment fluid from at least one of the containers 26 based on user selection. The manifold system 24 may include ***switches 29***, each corresponding to one of the bottles. ***The switches 29 can be used to control fluid flow from the containers 26***. The illustrated switches 29 can be used to turn Off/On to permit or prevent fluid flow from the bottles 26. The illustrated manifold system 24 has a switch corresponding to each bottle 26. As such, the switches can be used to independently ***control fluid flow*** from each of the bottles 26. In other embodiments, a single switch can be used to ***control the flow of treatment fluid*** from more than one of the bottles 26.

(*Id.* at 5:28-30, 17:17-29 (emphases added); *see also id.* at cl. 21 ("The skin treatment apparatus of claim 11, wherein the fluid control member includes a first switch corresponding to the first

[3] In its *Markman* Brief, Complainant also references "flow rate controllers . . . clamps, pinch valves, or other suitable devices," which was not specifically included in its proposed construction. (CMBr. at 21 (citing JXM-0001 at 9:11-23).) This additional disclosure in the specification, and Complainant's reference to it, is understood to be specific examples of "valves, fluid lines, and the like."

container and a second switch corresponding to the second container, the first switch and the second switch configured to permit or prevent flow from the first container and the second container to independently control flow from each of the first container and the second container.”).)

With respect to lumen 171, the specification discloses:

> Both FIGS. 15B and 15C show the fluid pick up conduit 62 in operative engagement with the bottle 26 through the seal 267. Suction device(s) is preferably in fluid communication with the fluid pick up conduit 62, and draws fluid out of the bottle 26 through the fluid pick up conduit 62. The fluid can flow through a passageway 161 (see FIG. 15C) extending through the pick up conduit 62. The fluid can ***flow to and through the lumen 171 towards the line 20***. If the switch 29 is off, the fluid from one or more of the upstream bottles can flow along the passage 173. The manifold system 24 then directs the fluid into the line 20.[4]

(*Id.* at 18:8-18 (emphases added).)

With respect to “valves, fluid lines, and the like,” the specification discloses: “The console 12 can also comprise a mechanical system for ***controlling fluid flow*** from the containers to the handpiece. One or more ***pumps, valves, fluid lines, and the like can cooperate to deliver fluid*** from the containers to the handpiece.” (*Id.* at 18:38-42 (emphases added).)

Complainant’s expert, Dr. Karl Leinsing, opined that one of ordinary skill in the art could have used the disclosed structures, including manifolds, lumens, fluid lines, and valves, to perform the recited functions of selectively receiving fluid from the containers and being in fluid communication with the handpiece. (CXM-0034 (Leinsing Decl.) at ¶¶ 34-35.) Dr. Leinsing explained that based on the specification, a person of ordinary skill could use a fluid line with one or more valves. (*Id.*) He also explained that one of ordinary skill could have used the disclosed manifold with multiple valves to perform the recited functions or could use the disclosed central lumen in combination with fluid lines to perform the functions. (*Id.*) Dr.

[4] Line 20 is described in the specification as the component that connects the handpiece assembly 18 to the console 12. (JXM-0001 at 5:26-28, Fig. 1.) Line 20 is not part of the manifold system 24. (*See, e.g.*, *id.* at Fig. 1.)

Leinsing opined that alternatively, a skilled artisan could use a combination of fluid line tubes interconnected with valves to perform the functions. (*Id.*)

Respondent asserts that the "same relevant prosecution history discussed with respect to 'block' . . . is relevant with respect to 'fluid control member.'" (RMBr. at 26; *see also id.* at 12–14.) In particular, Respondent argues that Complainant's amendments during prosecution to replace claims containing the term "manifold" and "manifold system" with ones that use "fluid control member" instead indicate that the different terms have different meanings. (*Id.*) Because the term "block" was found to be indefinite, and Complainant subsequently terminated all asserted claims that recite "block," which Respondent did not oppose, Complainant and Respondent have waived any argument on how, if at all, the prosecution history impacts the construction of "fluid control member" for appeal purposes.

Additionally, Respondent contends that Complainant's corresponding structure is too broad. (RMBr. at 27.) With respect to the lumen 171, Respondent asserts that the specification does not link this structure with the claimed function. (*Id.*) Respondent also argues that the lumen 171 is "only a conduit" and "does not 'control' fluid in any way[.]" (*Id.*) Neither argument is supported. The specification makes clear that the lumen 171 is a part of, and involved in, the structure that controls fluid flow in the claimed system. Moreover, the lumen 171 is encompassed in the "equivalents of these structures."

For the foregoing reasons, "fluid control member" is construed to a means-plus-function term where the function is to "be in fluid communication with at least a first container and a second container when the first container and the second container are connected to the fluid control member" and "be in fluid communication with the handpiece assembly." The

corresponding structures disclosed in the specification are "manifold system 24," "switches 29," "lumen 171," "valves, fluid lines, and the like," and equivalents of these structures.

b) Indefiniteness

Respondent argues "fluid control member" is indefinite because Complainant "cannot amend to remove manifold and replace it with a term that immediately recaptures manifold." (RMBr. at 28.) In support, Respondent states:

> an ordinarily skilled artisan would understand that the amendment was made to avoid the "manifold," because the amendment was made in the context of and immediately following the publication of the summary judgment against [Complainant] because of the term "manifold" and in furtherance of a strategy to capture different aspects of a specification.

(*Id*.)

To the contrary, there are sufficient other structures disclosed in the specification to perform the recited functions such that the term is not indefinite.

As discussed above, the specification discloses various structures that permit fluid communication with a first container, a second container, and handpiece assembly when the first container and the second container are connected to the fluid control member. The specification discloses "switches" that "can be used to control fluid flow from the containers 26. The illustrated switches 29 can be used to turn Off/On to permit or prevent fluid flow from the bottles 26." (JXM-0001 at 17:21–22.) The switches can operate in conjunction with disclosed lumens: "The fluid can flow to and through the lumen 171 towards the line 20. If the switch 29 is off, the fluid from one or more of the upstream bottles can flow along the passage 173." (*Id*. at 18:15–17.) Both "bottles 26" and "upstream bottles" refer to the claimed containers. (*See, e.g.*, *id*. at 5:42–46, 5:63–65, 14:49–56, Figs. 1, 15A–15C.) The specification discloses "one or more pumps, valves, fluid lines, and the like can cooperate to deliver fluid from the containers to the handpiece." (*Id*. at 18:40–42.)

The specification also discloses "[t]he manifold system 24 can deliver treatment material from the containers 26 to the line 20 [and] to be passed through the line 20 to the handpiece assembly 18" as recited functions of the "fluid control member." (JXM-001 at 6:22–27.)

Complainant's position that the disclosed structures can operate individually or in combination to perform the recited functions is consistent with the specification. (*See* CMBr. at 21.) The recited functions are to "be in fluid communication with at least a first container and a second container when the first container and the second container are connected to the fluid control member" and "be in fluid communication with the handpiece assembly." As described above, the specification describes both individual components and cooperation between the components to permit fluid flow between the containers and handpiece. (*See, e.g.*, JXM-0001 at 18:40–42 ("[O]ne or more pumps, valves, fluid lines, and the like can cooperate to deliver fluid from the containers to the handpiece.").)

Respondent's arguments about the specification disclosures are unpersuasive. With respect to lumen 171, Respondent argues "[i]t is no more associated with the claimed functions than any other portion of the manifold – or the rest of the device – that is in fluid communication with containers and the handpiece" and "does not 'control' fluid flow in any way from the containers or to the handpiece. It is only a conduit." (RMBr. at 27–28.) Respondent acknowledges that lumen 171 is "in fluid communication with containers and the handpiece," which is consistent with the function proposed by both Complainant and Respondent, that is, to "be in fluid communication with at least a first container and a second container . . ." and "be in fluid communication with the handpiece assembly." Respondent has not argued what "control" of fluid flow is missing under its own proposed function.

Respondent also takes issue with the disclosure in the specification of "valves, fluid lines, and the like" arguing the portion of the list "and the like" is undefined and open ended. (RMBr. at 28.) Respondent has not presented any persuasive evidence that a person of skill would fail to understand the structures similar to valves and fluid lines disclosed in the specification. Furthermore, under section 112 paragraph 6, "such claim shall be construed to cover the corresponding structure, material, or acts described in the specification *and equivalents thereof*." 35 U.S.C. § 112(6) (emphasis added). Here, "and the like" should have the same meaning as "equivalents thereof" conveyed by statute.

For the foregoing reasons, "fluid control member" is not indefinite.

2. "Collection lumen"

Claim Term	**Complainant's Proposed Construction**	**Respondent's Proposed Construction**	**Adopted Construction**
collection lumen '287 Patent Claim 22	Plain and ordinary meaning If construed: "an interior space or pathway that receives fluid"	This term is indefinite and lacks written support. Alternatively, the term is subject to 35 U.S.C. § 112, ¶6. The function is to be in fluid communication with the first container and the at least one additional container when the first container and the at least one additional container are connected to the console. The corresponding structure is a manifold or its equivalent.	Plain and ordinary meaning, i.e., an interior space or pathway that receives fluid

Complainant's proposed construction of "collection lumen," i.e., "an interior space or pathway that receives fluid," reflects the term's plain and ordinary meaning as demonstrated in

the intrinsic evidence and as understood in the field of art. For the following reasons, Complainant's proposed definition is adopted.

"Collection lumen" only appears in claim 22 , which recites in part:

> a collection lumen configured to be in fluid communication with the first container and the at least one additional container when the first container and the at least one additional container are connected to the console . . . wherein the working end of the handpiece is configured to be placed in fluid communication with the first container or the at least one additional container through the collection lumen; and
>
> a supply conduit that places the collection lumen in fluid communication with the working end of the handpiece when the handpiece is connected to the console; . . .

(JXM-0001 at claim 22.)

The claim language describes the collection lumen as being in fluid communication with multiple containers, the working end of the handpiece is in fluid communication with the containers through the collection lumen, which itself is placed in fluid communication with the handpiece by a supply conduit.

The term "collection lumen" does not appear in the specification, but the claims and specification inform a person of ordinary skill of its meaning. Respondent focuses on the lack of the term "collection lumen" in the specification to argue the specification "provides no guidance regarding its meaning. (RMBr. at 29.) However, this is not the end of the inquiry. As Respondent acknowledges, "[v]arious lumens are discussed throughout" the specification. (*Id.*) In particular, the specification discloses:

> Both FIGS. 15B and 15C show the fluid pick up conduit 62 in operative engagement with the bottle 26 through the seal 267. Suction device(s) is preferably in fluid communication with the fluid pick up conduit 62, and draws fluid out of the bottle 26 through the fluid pick up conduit 62. The fluid can flow through a passageway 161 (see FIG. 15C) extending through the pick up conduit 62. The fluid can flow to and through the lumen 171 towards the line 20. If the switch 29 is off, the fluid from one or more of the upstream bottles can flow along the passage 173. The manifold system 24 then directs the fluid into the line 20.

(JXM-0001 at 18:6–16.)

This excerpt describes the fluid flow path from the bottle 26 "through the lumen 171 towards the line 20" and line 20 is connected to the handpiece. (*Id*. at 7:27–31, 18:6–16.)

Respondent has not demonstrated that collection lumen should deviate from its plain and ordinary meaning. The parties' dispute centers on the "collection" portion of the term rather than "lumen." No party has argued that a person of skill would fail to understand what a lumen is in the context of the '287 patent. (CMBr. at 23–25 (arguing a plain and ordinary meaning for this term); (RMBr. at 29–30 (noting various known lumens: e.g., "lumen in the manifold," "delivery lumens," and "lumens that bring fluid to the patient treatment cite").) Respondent relies on contradictory statements by the inventors when questioned about their understanding of "collection lumen." (RMBr. at 30–31.) Inventor Ignon stated:

> Q. So what is a collection lumen specifically?
>
> A. It is a tubing that goes from the handpiece to the -- in this iteration, to the waste container.
>
> Q. And is your understanding "a collection," meaning collecting waste. Is that what you're saying?
>
> A. Correct.

(RXM-0048 at 77:18–24.) Inventor Cohen stated:

> Q. Okay. Have you ever heard the term collection lumen?
>
> A. Yeah. From the handpiece, there's a delivery of fluid, and then there's a lumen, a tube, that's connected to the handpiece.
>
> Q. Okay.
>
> A. That takes away the debris.
>
> Q. So the collection lumen goes from the handpiece, it's like the waste conduit?
>
> A. Goes to the collection container.
>
> Q. Okay.

A. The fluid, the debris all drops in there, right.

(RXM-0029 at 129:1–13.)

In contrast, Inventor Mallett described the "collection lumen" as:

Q. As used in these patents do you know what a collection lumen is?

A. It's the lumen in the manifold. It's the lumen that's going to combine our fluids into our handpiece lumen.

(RXM-0049 at 132:16–20.)

Here, the testimony of the inventors carries little weight. While inventor testimony is a form of extrinsic evidence that can be considered in claim construction that "can shed useful light on the relevant art, . . . it is less significant than the intrinsic record in determining the legally operative meaning of claim language." *Phillips*, 415 F.3d at 1317 (internal quotations omitted). "The subjective intent of the inventor when he used a particular term is of little or no probative weight in determining the scope of a claim (except as documented in the prosecution history)." *Markman v. Westview Instruments, Inc.*, 52 F.3d 967, 985 (Fed. Cir. 1995), *aff'd,* 517 U.S. 370, 116 S. Ct. 1384, 134 L. Ed. 2d 577 (1996); *Howmedica Osteonics Corp. v. Wright Med. Tech., Inc.*, 540 F.3d 1337, 1346 (Fed. Cir. 2008). The "collection lumen" described by Inventors Ignon and Cohen directly contradicts the claim language as a lumen collecting waste from the handpiece is inconsistent with "the handpiece is configured to be placed in fluid communication with the first container or the at least one additional container through the collection lumen" as the claim requires. (JXM-0001 at claim 22.) In other words, the collection lumen must be between the container and handpiece. It appears Inventors Ignon and Cohen focus on "waste collection" or a "waste collection lumen" in their characterization of the term's meaning. Similarly, Dr. Jensen also associates "collection" with "collection of waste. (RMBr. at 30; RXM-0053 ¶ 198.) However, neither the claim nor the specification describes waste in

connection to a lumen as claimed in the ’287 patent. Inventor Mallett’s description aligns with the claim language—as Respondent recognizes (RMBr. at 31)—describing “collection lumen” as “the lumen in the manifold. It's the lumen that's going to combine our fluids into our handpiece lumen.” (RXM-0049 at 132:16–20.) In summary, the testimony of the various inventors is insufficient to deviate from the plain and ordinary meaning of “collection lumen.”

Respondent bears the burden of overcoming the presumption of validity and showing, by clear and convincing evidence, that claim 22 of the ’287 patent is indefinite. Respondent has not met its burden here. As discussed above the claims and specification inform on of ordinary skill about the scope of the invention, specifically “collection lumen” is described by at least lumen 171. (*See* JXM-0001 at 18:6–16.)

Similarly, Respondent’s means-plus-function argument fails. “Means-plus-function claiming applies only to purely functional limitations that do not provide the structure that performs the recited function.” *Phillips,* 425 F.3d at 1311. The first inquiry is “whether the words of the claim are understood by persons of ordinary skill in the art to have a sufficiently definite meaning as the name for structure.” *Williamson v. Citrix Online*, 792 F.3d 1339, 1349 (Fed. Cir. 2015) (en banc in relevant part to “abandon characterizing as ‘strong’ the presumption that a limitation lacking the word ‘means’ is not subject to § 112, para. 6”). If a claim does not use the word “means,” there is a rebuttable presumption that the statute does not apply. *Id*. However, if “the claim term fails to ‘recite[ ] sufficiently definite structure’ or else recites ‘function without reciting sufficient structure for performing that function,’” the presumption may be rebutted and the statute may be applied. *Id*. at 1348 (quoting *Watts v. XL Sys., Inc.*, 232 F.3d 877, 880 (Fed. Cir. 2000)). Here, the claims do not include the word “means, and accordingly there is no presumption that “collection lumen” should be construed pursuant to

section 112 ¶ 6. The inquiry then becomes whether a person of ordinary skill in the art would understand the term to recite sufficiently definite structure. The parties do not dispute that lumen is a well understood term that connotes structure. (*See* CMBr. at 23–25; RMBr. at 29–30.) As discussed above, the claims and specification describe the collection lumen's location in the device and the components connected to it. Despite disagreeing on the precise meaning that collection has when combined with lumen, no party argues that it would fail to convey a meaning to one of skill in the art. The intrinsic evidence provides sufficient structure to "collection lumen" such that it should not be interpreted as a means-plus-function term.

For the foregoing reasons, "collection lumen" is given its plain and ordinary meaning, i.e., "an interior space or pathway that receives fluid."

3. "Handpiece" / "handpiece Assembly"

Claim Term	Complainant's Proposed Construction	Respondent's Proposed Construction	Adopted Construction
handpiece '287 Patent Claim 22	Plain and ordinary meaning If construed: "part that is designed to be held by hand"	A handpiece is a unitary device for treatment, including a handle and tip.	Plain and ordinary meaning, i.e., the part that is designed to be held by hand
handpiece assembly '287 Patent Claims 11	Plain and ordinary meaning If construed: "part that is designed to be held by hand"	A handpiece assembly is multiple pieces that can be interconnected to make the handheld portion of the apparatus.	Plain and ordinary meaning, i.e., the part that is designed to be held by hand

The terms "handpiece" and "handpiece assembly" will be construed together. The Parties agree that the '287 specification uses the two terms interchangeably. (CMBr. at 28 ("The specification of the '287 Patent uses the terms 'handpiece' and 'handpiece assembly'

interchangeably."); RMBr. at 37 ("The specification treats handpiece and handpiece assembly as synonyms.").) The specification identifies component 18 as the handpiece or handpiece assembly, even within the same paragraph:

> The ***handpiece assembly 18*** can preferably massage, abrade, ablate, or otherwise treat the target skin area while also applying a treatment material to the patient. In certain embodiments, the treatment material and tip of the ***handpiece 18*** can work in combination for an effective and rapid skin treatment.

(JXM-0001 at 5:54-60 (emphases added).)

Other disclosures in the specification confirm that the two terms are used interchangeably: "the ***handpiece assemblies*** can be used without treatment material, i.e., the ***handpieces*** can be used in a dry procedure." (*Id*. at 13:28–33 (emphases added).) The claims also use the terms similarly. (*Compare id*. at claim 1 ("a handpiece configured to contact skin tissue of a subject . . .when the handpiece is connected to the console") *with id*. at claim 11 ("a handpiece assembly configured to contact a skin surface of a subject . . . when the handpiece assembly is connected to the console").) "The interchangeable use of the two terms is akin to a definition equating the two." *Edwards Lifesciences LLC v. Cook Inc.*, 582 F.3d 1322, 1329 (Fed. Cir. 2009); *see also Baran v. Med. Device Techs., Inc.*, 616 F.3d 1309, 1316 (Fed. Cir. 2010) (construing the terms "detachable" and "releasable" to have the same meaning when "the evidence indicates that the patentee used the two terms interchangeably").

The claim language does not support either of Respondent's proposed constructions for these two terms. Each of these terms appears in the claims in connection to several other components, but do not disclose they are comprised of "multiple pieces that can be interconnected" and are silent on whether there is a tip.

Similarly, the specification does not support Respondent's proposed narrowing constructions. Respondent asserts that a handpiece is a unitary device that includes a handle and

a tip. (PH JCCC; RMBr. at 36 ("The difference between the parties' position is whether a 'handpiece' or 'handpiece assembly' that is 'configured to contact skin' includes an easily removable tip.").) However, the specification discloses using the handpiece in conjunction with both removable tips, "[i]n some embodiments, the tip 34 is removably coupled to the main body 30 such that the tip may be removed from the main body 30 and thrown away to avoid cross-contamination," and permanently coupled tips, "[t]he tip 34 can be permanently or temporarily coupled to the distal end 36 of the main body 30." (JXM-0001 at 7:11–26.) Respondent acknowledges this. (RMBr. at 36–37 ("The specification provides different examples of different types of handpieces, some with removable tips and some without.").)

The specification does not contain a clear disclaimer that the claims should be limited to only a subset of the disclosed tip and handpiece combinations. Respondent argues that it is only the unitary embodiments where there is "a handpiece configured to contact skin tissue of a subject." (JXM-0001 at claim 1; RMBr. at 36–37.) Respondent read the specification too narrowly. The specification discloses:

> With reference to FIGS. 2A and 2B, the handpiece assembly 18 includes a main body 30 and a tip 34. The handpiece assembly 18 can be conveniently held within the hand of a user so that the user can place the tip 34 in operative engagement with a person's skin.

FIG. 2A

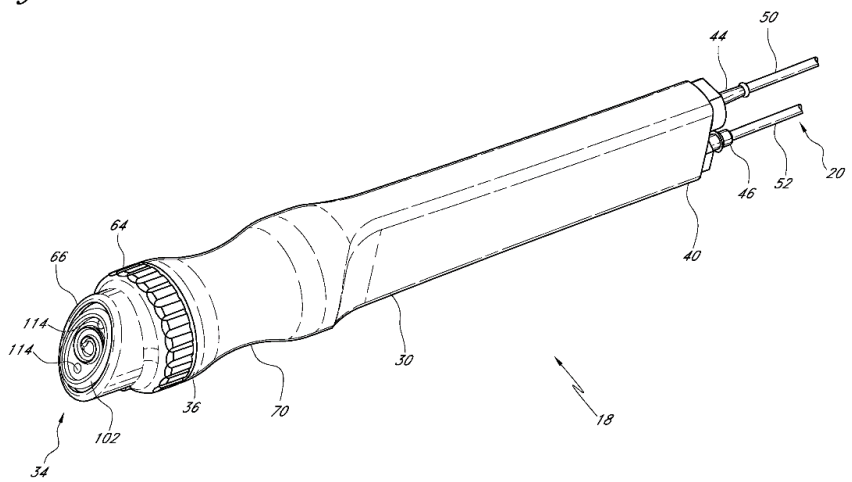

(JXM-0001 at 6:49–53, Fig. 2A.)

This disclosure makes clear that the handpiece assembly can include the tip when describing contact with the skin. It is also clear from the figures that removable tips are contemplated: "The skirt 64 is preferably configured to provide a gripping surface suitable for applying leverage or force sufficient to remove the tip 34 from the main body 30." (*Id*. at 9:30–34.)

The specification supports that a person of ordinary skill would understand "handpiece" and "handpiece assembly." The specification describes a handpiece assembly that "be conveniently held within the hand of a user," "the user can comfortably grip the handpiece assembly 18 during use," and "have other designs to provide a comfortable grip." (*Id*. at 6:49–61.) Respondent's arguments that the term does not include a removable tip is rejected because it is unsupported. Respondent does not address what a person of ordinary skill in the art would understand to be the plain and ordinary meaning of "handpiece" or "handpiece assembly." (*See generally* RMBr. at 35–46.)

a) Patent Family

Respondent's other arguments are insufficient to overcome the disclosures of the claims and specification. Respondent argues the claims of other patents in the same family are "repeatedly clear that the 'handpiece' or 'handpiece assembly' is a structure that does not include an easily removable tip." (RMBr. at 38–40.) Respondent relies on language in the claims of the other patents that describe the tip as "coupled" or "secured" to the handpiece. (*Id*.) Respondent is making a claim differentiation argument among the claims of the patent family.

Claim differentiation can be applied "[b]eyond the independent/dependent claim scenario," but also "cautioned that '[c]laim differentiation is a guide, not a rigid rule.'" *Curtiss-Wright Flow Control Corp. v. Velan, Inc.*, 438 F.3d 1374, 1380–81 (Fed. Cir. 2006) (quoting

Laitram Corp. v. Rexnord, Inc., 939 F.2d 1533, 1538 (Fed.Cir.1991)). The Federal Circuit elaborated that:

> Different claims with different words can, of course, define different subject matter within the ambit of the invention. On the other hand, claim drafters can also use different terms to define the exact same subject matter. Indeed this court has acknowledged that two claims with different terminology can define the exact same subject matter.

Id. at 1380.

Furthermore, an inventor has a basic right "to claim his invention as he chooses." *Application of Weber*, 580 F.2d 455, 459 (C.C.P.A. 1978); *see also Cooper Cameron Corp. v. Kvaerner Oilfield Prod., Inc.*, 291 F.3d 1317, 1322 (Fed. Cir. 2002) ("An inventor is entitled to claim his invention in more than one way."). Although inventors are entitled to claim in a patent the entirety of what they have invented, they can also "claim less, to avoid prior art or for any other reason." *MySpace, Inc. v. GraphOn Corp.*, 672 F.3d 1250, 1256 (Fed. Cir. 2012); *ScriptPro LLC v. Innovation Assocs., Inc.*, 833 F.3d 1336, 1342 (Fed. Cir. 2016) ("Not every claim must contain every limitation or achieve every disclosed purpose."); *Rodime PLC v. Seagate Tech., Inc.*, 174 F.3d 1294, 1303 (Fed. Cir. 1999) ("A claim need not claim every function of a working device. Rather, a claim may specify improvements in one function without claiming the entire machine with its many functions."); *Phillips*, 415 F.3d at 1327 (noting that not every advantage of the invention must appear in every claim).

Here, in view of the specification that clearly discloses that the handpiece assembly can include a tip, and the tips can be permanently or temporarily attached, the various language used in claims of the patents in the family is insufficient to restrict the claims of the '287 patent to a particular embodiment.

b) Inventor Testimony

The inventor testimony Respondent cited is equally unpersuasive. Respondent relies on deposition testimony of Roger Ignon, a named inventor of the ’287 patent, who stated in the context of a related patent, U.S. Patent No. 10,357,641:

> You agree that the handpiece assembly does not include the releasable tip; correct?
>
> MR. RAZAI: Objection. Asked and answered. Misstates the testimony.
>
> THE WITNESS: Do I need to answer this?
>
> MR. RAZAI: It is up to you.
>
> THE WITNESS: I think I answered it before.
>
> BY MR. TEPERA:
>
> Q. Have you answered it with respect to the ’641 patent?
>
> A. I answered it on a previous tip patent.
>
> Q. And so is your answer the same on the ’641 patent, which is the handpiece assembly does not include the releasable tip?
>
> A. Yes.

(RXM-0048 (Ignon Dep. Tr.) at 118:9–23.)

Mr. Ignon’s testimony is inconsistent at best. In the same deposition, he also testified the “[h]andpiece assembly is the handpiece with the tip together” and “I consider that handpiece with a tip the assembly.” (*Id*. at 97:7–9, 100:23–24.) At most, Mr. Ignon’s testimony indicates that some embodiments may include a removable tip as part of the handpiece assembly and others may not.

Respondent also cites testimony from inventor Scott Mallett as support that the handpiece assembly does not include a releasable tip. (RMBr. at 40–41.) Neither of the excerpts

Respondent cited is directed to the ’287 patent. When asked about how a customer would assemble the handpiece, Mr. Mallett stated:

> I would assume -- again, I don’t know how they’re shipping them out, but I’m assuming the handpiece is likely the handle or the body of the handpiece with the O-ring and the barbed fittings and the tubing and the coupling is in a bag that you take out and you uncoil and plug it into the machine and then put your tips on it and off you go. I’m assuming that’s how you would get that.

(RXM-0049 (Mallett Dep. Tr.) at 119:7–120:8.)

Similarly, Inventor Mallett described company documents of the handpiece assembly:

> Again, I don’t know what Edge’s documents looks like these days but back in the day and maybe even now there's likely a drawing for the handpiece assembly which would be the handle, the barbs, the tubing and the coupler that goes to the device and the O-ring.

(*Id*. at 122:13–24.)

It is unclear if Mr. Mallett is commenting on commercial embodiments of the patented invention or his understanding of the patent claim as demonstrated by his statement that “I don’t know what Edge’s documents looks like these days but back in the day and maybe even now there’s likely a drawing . . . .” (*Id*.) “[C]laim construction, from which an infringement analysis depends, focuses on the recited limitations of the *claims*, not on the features of a commercial embodiment of the invention.” *Myco Indus., Inc. v. BlephEx, LLC*, 955 F.3d 1, 15 (Fed. Cir. 2020). The likelihood that Mr. Mallett was referring to commercialized products and not the meaning of the patent claims is reinforced because immediately after the excerpt above, Mr. Mallett was shown “a printout from HydraFacial’s website and so these are the sort of tips that you put on the handpiece assembly.” (RXM-0049 at 123:5–124:6.)

It is also unclear how much knowledge Mr. Mallett has on the topic of the tips and handpiece assembly of the invention. When shown a website with a variety of Complainant’s tips, Mr. Mallett stated he could identify “a little bit” and had “never seen this hammerhead shark

looking one," "never seen the bottom right one on the second page which is a Keravive tip, and he did not "understand the significance between a blue tip and a clear tip and an orange tip," only reading that "the orange tip says 'aggressive.'" (*Id*. at 123:5–124:6.) Mr. Mallett had already acknowledged that he was "not familiar with this part of the language of the patent that says the tip can be permanently coupled to it" and had "never developed anything like that and never saw anything like that that I can recall." (*Id*. at 99:6–10.) These points make Mr. Mallett's testimony have less probative value in construing the present term. Even accepting Mr. Mallett's testimony as Respondent asserts, it would be insufficient to alter the scope of the claims in light of the embodiments clearly disclosed in the specification. *Phillips*, 415 F.3d at 1317.

In sum, the inventor testimony adds little to construing "handpiece" and "handpiece assembly."

c) Extrinsic Evidence

Respondent's reliance on Complainant's commercial embodiments is of limited relevance when construing claims. *Myco Indus., Inc. v. BlephEx, LLC*, 955 F.3d 1, 15 (Fed. Cir. 2020) ("[C]laim construction . . . focuses on the recited limitations of the *claims*, not on the features of a commercial embodiment of the invention."). Respondent describes HydraFacial's product user guides as not including the removeable tips when listing the contents of the "Handpiece kit." (RMBr. at 42–43 (citing RXM-0051).) The instruction manuals of Complainant's commercial embodiments are insufficient to limit the broader disclosures in the specification described above.

Similarly, Dr. Jensen's discussion of other patents and products is of limited relevance here. Extrinsic evidence such as expert testimony can be useful to "establish that a particular term in the patent or the prior art has a particular meaning in the pertinent field." *Phillips*, 415 F.3d at 1318. However, such testimony, generated at the time of and for the purpose of

litigation, can suffer from bias, particularly if not subject to cross-examination. *Id*. Extrinsic evidence, while possibly useful, is "unlikely to result in a reliable interpretation of patent claim scope unless considered in the context of the intrinsic evidence." *Id*. at 1319.

None of Dr. Jensen's opinions are sufficient to narrow the scope when considered in the context of the disclosures in the '287 patent. Dr. Jensen discusses various other patents that discuss coupling tips and handpieces. (RXM-0053 ¶¶ 136–149.) However, the claims of the '287 patent are silent with respect to the tip and the specification describes several embodiments of handpieces, tips, and handpiece assemblies. Reading the claims in the context of the specification, it would be improper to limit "handpiece" or "handpiece assembly" to only embodiments where there is no removable tip.

For the foregoing reasons, "handpiece" and "handpiece assembly" are construed together and given their plain and ordinary meaning, i.e., "the part that is designed to be held by hand."

4. "Sequentially"

Claim Term	**Complainant's Proposed Construction**	**Respondent's Proposed Construction**	**Adopted Construction**
sequentially '287 Patent Claims 12, 22	Plain and ordinary meaning If construed: "one after the other"	Following a fixed order.	Plain and ordinary meaning, i.e., one after the other or not simultaneously

The parties' dispute of the term "sequentially" centers on whether the actions occur one after another or follow a fixed order. Claim 22 is exemplary to show the use of the term in the claims of the '287 patent "wherein treatment materials from the first container and the at least one additional container are configured to be delivered to the supply conduit sequentially when

the first container and the at least one additional container are connected to the console." (JXM-0001 at claim 22.)

As the parties recognize, the specification describes the treatment fluid in the containers being delivered sequentially or simultaneously. (CMBr. at 39–40; RMBr. at 49.) "Sequentially" appears only once in the specification:

> During some skin treatment procedures, treatment materials from multiple containers 26 are sequentially or simultaneously applied to the patient's skin during a "wet" mode of operation. Alternatively, the skin treatment system 10 can be used to deliver a single treatment material to the patient's skin. In some embodiments, the console 12 can be used for a "dry" mode of operation. That is, the console 12 can be used to exfoliate skin, for example, without delivering little or substantially no treatment fluid. The skin treatment system 10 can thus provide flexibility in selecting a treatment plan.

(JXM-0001 at 6:27-37.)

Here, the language describes three general types of operation: use of multiple treatment materials, use of a single treatment material, and a "dry" mode where little or no treatment fluid is utilized. (*Id.*) When addressing the use of treatment materials from multiple containers, only two options are presented, "sequentially or simultaneously" applying to the patient's skin. The broad categories described here indicate "sequentially" has a broad meaning to distinguish it from simultaneously. No specific treatment orders are mentioned. The disclosure describes encompasses all options for use: one can use zero, one, or multiple treatment materials, and if multiple treatment materials are used, they are either applied sequentially or simultaneously. In this context, "sequentially or simultaneously" would encompass all options when utilizing multiple treatment materials. Stated differently, the disjunctive form of the clause indicates "sequentially" would include any multiple treatment material delivery that is not simultaneous.

Other disclosures in the specification are consistent with "sequentially" have a broad meaning. The specification describes the use of tips in wet and dry mode to indicate one after

another or not at the same time:

> In some embodiments, the tip 34 is used in a dry mode to remove a desired amount of skin. After removing a desired amount of skin, the tip 34 can be used in a wet mode on the same or different area of the patient's kin[sic]. During wet mode, fluid can be passed out of the tip 34 onto the patient's skin. The wet tip 34 can exfoliate, hydrate, and/or perform other types of treatments. Alternatively, the tip 34 can be used in a wet mode and than [sic] a dry mode. The sequence of wet and dry modes of operation can be selected based on the type of tip, treatment material, skin condition, and the like.

(*Id*. at 13:17–27.)

Here, the specification describes two alternatives when using a tip in "dry mode" and "wet mode": use dry mode and then wet mode, or the opposite, wet mode and then dry mode. In this context, the sequence is selecting which one goes first and which goes after, with both modes of operation selectable. This selection certainly results in an "order" to the modes of operation used, but not restricted to a "fixed order" as Respondent proposes. Instead, a user would select the sequence "based on the type of tip, treatment material, skin condition, and the like." (*Id*.)

Respondent cites the following disclosure:

> In some embodiments, a method of treating a target region on a patient's skin comprises engaging a first skin treatment tip with the patient's skin. A first material is delivered out of the first skin treatment tip to a target region. A second skin treatment tip engages the target region while the first material effectively facilitates exfoliation with the second skin treatment tip. In some variations, the first material comprises an acid, hydrator, and combination thereof. In some variations, the first skin treatment tip is configured to remove skin at a different rate than the second skin treatment tip. In some variations, the first skin treatment tip is configured to exfoliate at a higher rate than the second skin treatment tip. In some variations, material is delivered out of the second treatment tip to the target region of the patient's skin.

(*Id*. at 3:38–51; RMBr. at 51.)

Respondent characterizes this disclosure as a multi-fluid treatment "applied in a set sequence for a combined treatment." (RMBr. at 51.) Even accepting Respondent's

characterization, the exemplary nature of this disclosure is evident from the repeated use of the phrases "in some embodiments" and "in some variations." It is improper to limit the claims to such an embodiment, especially in light of other disclosures above. Requiring a "fixed order" based on these exemplary treatments would improperly limit the term "sequentially" when there is no clear definition or disclaimer in this language.

a) Prosecution history

The patent prosecution history of the '287 patent supports a conclusion that "sequentially" is meant to broadly mean not simultaneously. As Respondent notes, "sequentially" was added to the independent claim after the patent examiner's rejection of the claim in light of Coleman (U.S. Patent Application Publication No. 2001/0049511 A1). (RMBr. at 49–50; JXM-0002 at 1316, 1443–44.) The patent examiner explained that Coleman disclosed treatment materials "delivered together/mixed during the procedure to provide treatment to the skin":

> However, Coleman fails to disclose or suggest that the system is configured to deliver a first treatment fluid contained in the first container and an additional treatment fluid contained in the at least one additional container to the handpiece sequentially. This limitation, in combination with the other limitations in the claim and the limitations of claim 2, is not disclosed or suggested in the prior art of record. It would not be obvious to modify Coleman to function as claimed because Coleman discloses that the treatment materials are delivered together/mixed during the procedure to provide treatment to the skin. Sequential delivery of the treatment materials from containers disclosed by Coleman would not provide the intended effect. For example, delivery of fluid from container 60C disclosed by Coleman would only provide sterile water to the skin and abrasion would not occur. Coleman also discloses that the sterile water is necessary to delivery [sic] the abrasive material to the skin, so it would not be possible to sequentially deliver the water and then the abrasive material.

(JXM-0002 at 1316.)

It is clear from the description of the prior art that Coleman must deliver its treatment materials simultaneously to function and delivering the materials separately was neither

disclosed nor feasible. Delivering the treatment materials sequentially did not require a fixed order as Respondent argues, but only that the treatment materials were not delivered simultaneously.

The parties also use extrinsic evidence in the form of dictionary definitions. (CMBr. at 39; RMBr. at 51–52.) Each party cites a definition that supports each of the proposed constructions. (*Id.*) Dictionaries can be useful in claim construction to better understand the underlying technology and the meaning of particular terminology. *Phillips*, 415 F.3d at 1318 (citations omitted).

For the foregoing reasons, "sequentially" is given its plain and ordinary meaning, i.e., "one after the other or not simultaneously."

III. TERMS CONSTRUED IN THIS ORDER

Claim terms are construed in this Order solely for the purposes of this Section 337 Investigation. Only claim terms in controversy need to be construed, and then only to the extent necessary to resolve the controversy. *Vanderlande Indus. Nederland BV v. Int'l Trade Comm.*, 366 F.3d 1311, 1323 (Fed. Cir. 2004); *Vivid Tech., Inc. v. Am. Sci. & Eng'g, Inc.*, 200 F.3d 795, 803 (Fed. Cir. 1999).

The Parties will be limited to the constructions adopted in this Order. Ground Rule 1.14 states that "[t]he parties will be bound by their claim construction positions set forth on the date they are required to submit a joint list showing each party's final proposed construction of the disputed claim terms and will not be permitted to alter these absent a timely showing of good cause." Modified or new constructions set forth for the first time in post-hearing briefs have been considered waived unless a party agrees with the other on a construction, thereby conceding its position.

Similarly, it will not be appropriate for any party to state or try to argue that a claim term that may be implicated in an expert report or expert testimony has a "plain or ordinary" meaning now that disputed claim terms have been construed. (*See* G.R. 1.14.) At this stage of the proceedings, such an argument will not be entertained, whether as an *ipse dixit* argument or an argument with explanations.

IV. CONCLUSION

Constructions of the disputed claim terms are hereby adopted by this Order.

SO ORDERED.

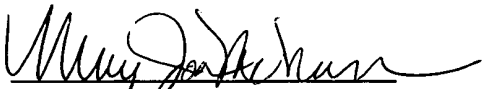

MaryJoan McNamara
Administrative Law Judge