US011362645B2

(12) **United States Patent**
Hoberman et al.

(10) **Patent No.: US 11,362,645 B2**
(45) **Date of Patent: Jun. 14, 2022**

(54) **POWER MANAGERS FOR AN INTEGRATED CIRCUIT**

(71) Applicant: **Mosaid Technologies Incorporated**, Ottawa (CA)

(72) Inventors: **Barry Alan Hoberman**, Cupertino, CA (US); **Daniel L. Hillman**, San Jose, CA (US); **Jon Shiell**, San Jose, CA (US)

(73) Assignee: **Mosaid Technologies Incorporated**, Ottawa (CA)

(*) Notice: Subject to any disclaimer, the term of this patent is extended or adjusted under 35 U.S.C. 154(b) by 94 days.

(21) Appl. No.: **16/928,311**

(22) Filed: **Jul. 14, 2020**

(65) **Prior Publication Data**

US 2021/0036689 A1 Feb. 4, 2021

Related U.S. Application Data

(63) Continuation of application No. 16/226,917, filed on Dec. 20, 2018, now Pat. No. 10,749,506, which is a continuation of application No. 15/490,557, filed on Apr. 18, 2017, now Pat. No. 10,243,542, which is a continuation of application No. 14/865,905, filed on Sep. 25, 2015, now Pat. No. 9,660,616, which is a (Continued)

(51) **Int. Cl.**

H03K 3/012	(2006.01)
G06F 1/3203	(2019.01)
G06F 1/324	(2019.01)
G06F 1/3296	(2019.01)
H02J 4/00	(2006.01)

(52) **U.S. Cl.**

CPC ***H03K 3/012*** (2013.01); ***G06F 1/3203*** (2013.01); ***G06F 1/324*** (2013.01); ***G06F 1/3296*** (2013.01); ***H02J 4/00*** (2013.01); *H01L 2924/00* (2013.01); *H01L 2924/0002* (2013.01); *Y02D 10/00* (2018.01); *Y02D 30/50* (2020.08)

(58) **Field of Classification Search**

CPC H03K 3/012; G06F 1/3203; G06F 1/324; G06F 1/3296; H01L 2924/00; H01L 2924/0002; Y02D 10/00; Y02D 30/50; H02J 4/00

USPC 716/127, 100, 133

See application file for complete search history.

(56) **References Cited**

U.S. PATENT DOCUMENTS

7,051,306 B2 * 5/2006 Hoberman et al. G06F 1/324 716/127

7,415,680 B2 * 8/2008 Hoberman et al. H03K 3/012 716/133

(Continued)

Primary Examiner — Sun J Lin

(74) *Attorney, Agent, or Firm* — Conversant IP Management Corp

(57) **ABSTRACT**

Systems and methods manage power in an integrated circuit using power islands. The integrated circuit includes a plurality of power islands wherein a power consumption of each power island within the plurality of power islands is independently controlled within each power island of the plurality of power islands. A power manager determines a target power level for one power island of the plurality of power islands. The power manager then determines an action to change a consumption power level of the one power island of the plurality of power islands to the target power level. The power manager performs the action to change the consumption power level of the one power island of the plurality of power islands to the target power level.

14 Claims, 13 Drawing Sheets

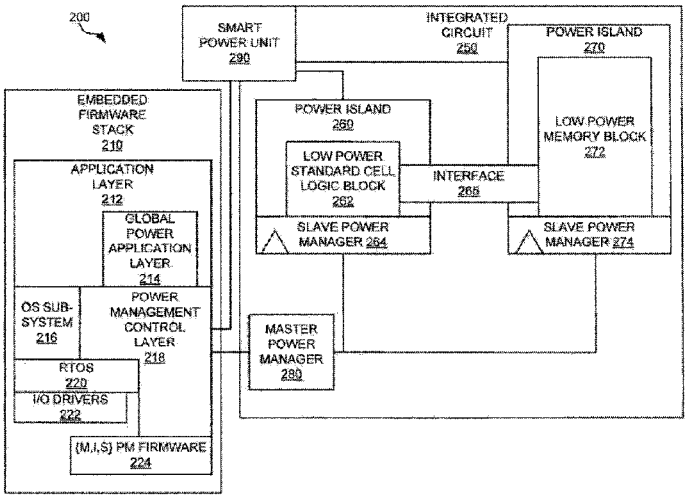

INFINEON 1055
Infineon v. Mosaid
IPR2025-01171

Related U.S. Application Data

continuation of application No. 14/324,297, filed on Jul. 7, 2014, now Pat. No. 9,166,412, which is a continuation of application No. 13/164,362, filed on Jun. 20, 2011, now Pat. No. 8,782,590, which is a continuation of application No. 12/332,529, filed on Dec. 11, 2008, now Pat. No. 7,996,811, which is a continuation of application No. 12/176,645, filed on Jul. 21, 2008, now Pat. No. 7,945,885, which is a continuation of application No. 11/336,097, filed on Jan. 20, 2006, now Pat. No. 7,415,680, which is a continuation of application No. 10/840,893, filed on May 7, 2004, now Pat. No. 7,051,306.

(60) Provisional application No. 60/468,742, filed on May 7, 2003.

(56) **References Cited**

U.S. PATENT DOCUMENTS

7,945,885	B2 *	5/2011	Hoberman et al.	H02J 4/00 716/133
7,996,811	B2 *	8/2011	Hoberman et al.	H03K 3/012 716/133
8,782,590	B2 *	7/2014	Hoberman et al.	G06F 1/324 716/133
9,166,412	B2 *	10/2015	Hoberman et al.	H02J 4/00
9,660,616	B2 *	5/2017	Hoberman et al.	G06F 1/324
10,243,542	B2 *	3/2019	Hoberman et al.	H02J 4/00
10,749,506	B2 *	8/2020	Hoberman et al.	G06F 1/324
2002/0029352	A1	3/2002	Shekhar et al.	
2002/0055961	A1	5/2002	Chauvel et al.	

* cited by examiner

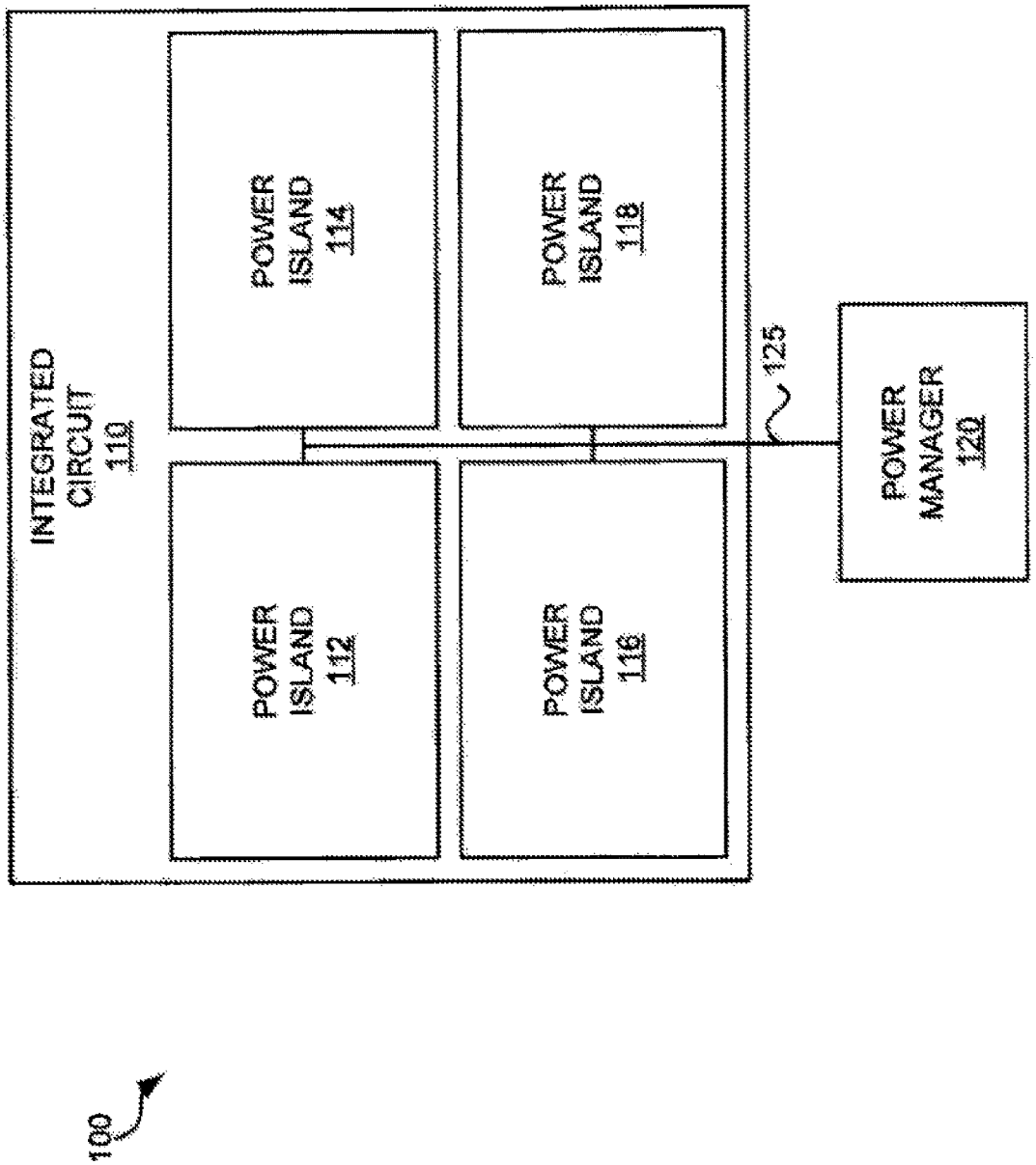
INTEGRATED CIRCUIT 110
POWER ISLAND 112
POWER ISLAND 114
POWER ISLAND 116
POWER ISLAND 118
125
POWER MANAGER 120
100

FIG. 1

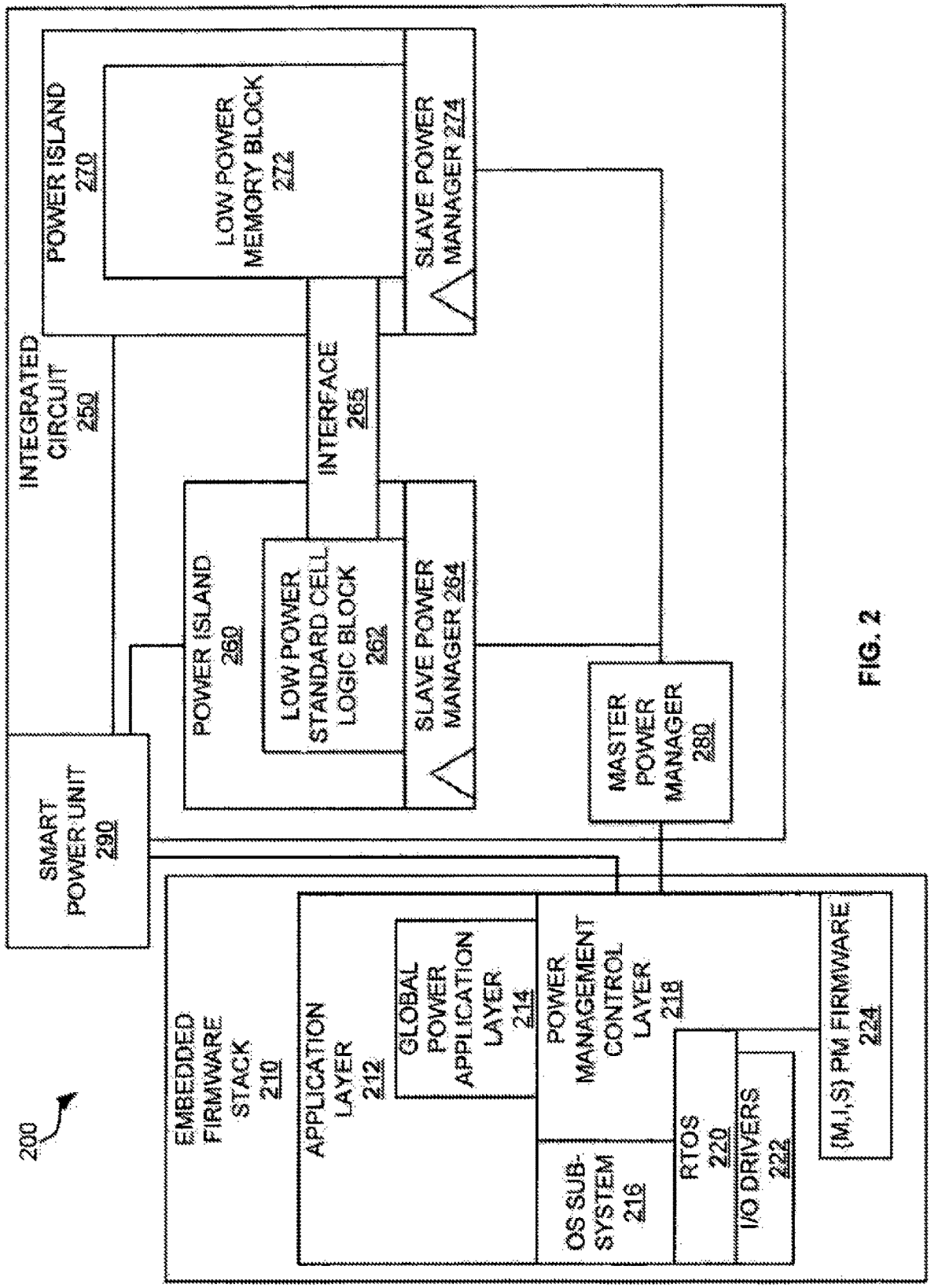
200
INTEGRATED CIRCUIT 250
POWER ISLAND 270
LOW POWER MEMORY BLOCK 272
SLAVE POWER MANAGER 274
INTERFACE 265
POWER ISLAND 260
LOW POWER STANDARD CELL LOGIC BLOCK 262
SLAVE POWER MANAGER 264
MASTER POWER MANAGER 280
SMART POWER UNIT 290
EMBEDDED FIRMWARE STACK 210
APPLICATION LAYER 212
GLOBAL POWER APPLICATION LAYER 214
POWER MANAGEMENT CONTROL LAYER 218
OS SUB-SYSTEM 216
RTOS 220
I/O DRIVERS 222
{M,I,S} PM FIRMWARE 224

FIG. 2

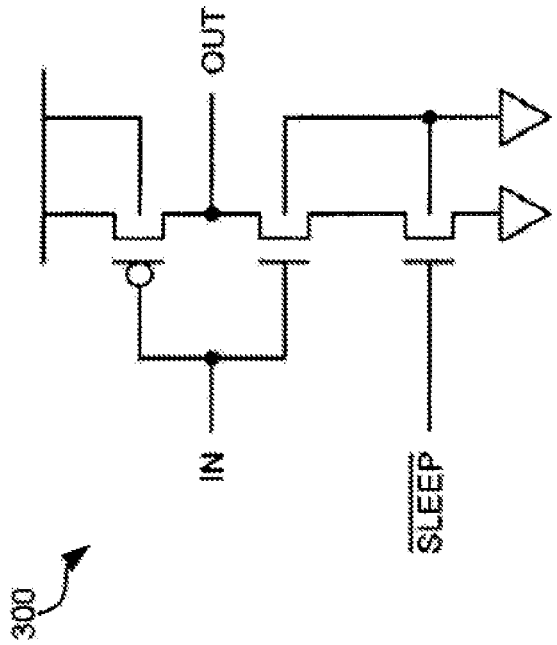

FIG. 3

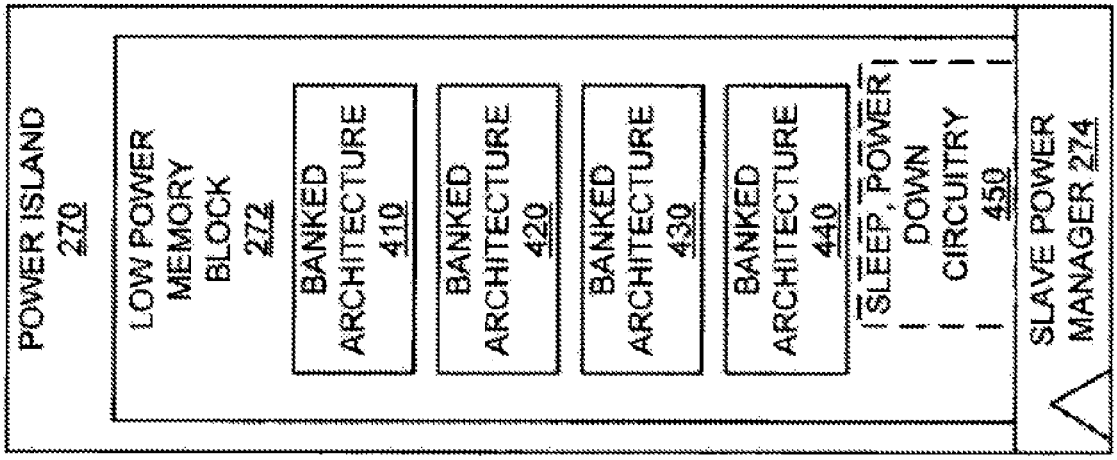
POWER ISLAND
270
LOW POWER
MEMORY
BLOCK
272
BANKED
ARCHITECTURE
410
BANKED
ARCHITECTURE
420
BANKED
ARCHITECTURE
430
BANKED
ARCHITECTURE
440
$\overline{SLEEP}$, $\overline{POWER}$
DOWN
CIRCUITRY
450
SLAVE POWER
MANAGER 274

FIG. 4

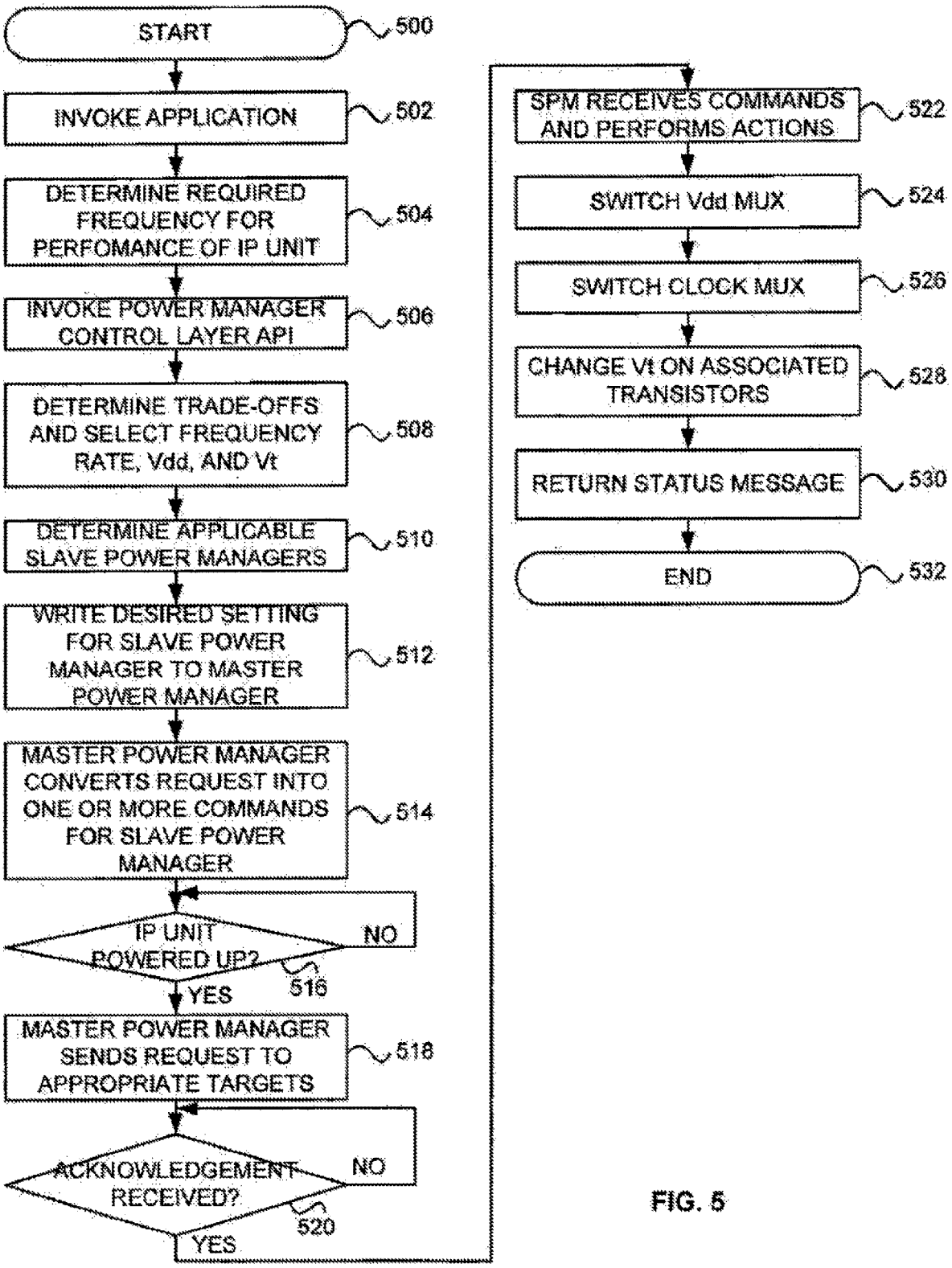
START
500
INVOKE APPLICATION
502
DETERMINE REQUIRED FREQUENCY FOR PERFOMANCE OF IP UNIT
504
INVOKE POWER MANAGER CONTROL LAYER API
506
DETERMINE TRADE-OFFS AND SELECT FREQUENCY RATE, Vdd, AND Vt
508
DETERMINE APPLICABLE SLAVE POWER MANAGERS
510
WRITE DESIRED SETTING FOR SLAVE POWER MANAGER TO MASTER POWER MANAGER
512
MASTER POWER MANAGER CONVERTS REQUEST INTO ONE OR MORE COMMANDS FOR SLAVE POWER MANAGER
514
IP UNIT POWERED UP?
NO
YES
516
MASTER POWER MANAGER SENDS REQUEST TO APPROPRIATE TARGETS
518
ACKNOWLEDGEMENT RECEIVED?
NO
YES
520
SPM RECEIVES COMMANDS AND PERFORMS ACTIONS
522
SWITCH Vdd MUX
524
SWITCH CLOCK MUX
526
CHANGE Vt ON ASSOCIATED TRANSISTORS
528
RETURN STATUS MESSAGE
530
END
532

FIG. 5

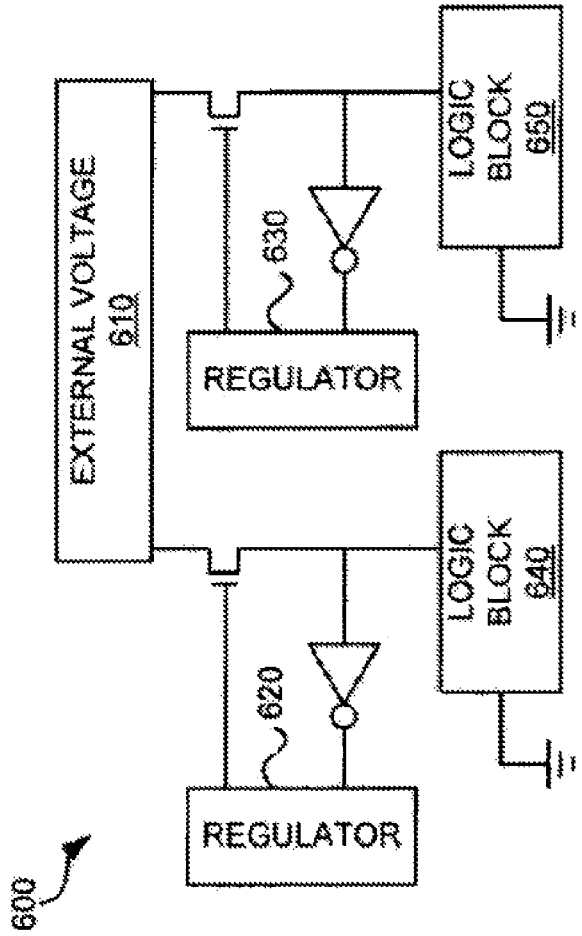
600
EXTERNAL VOLTAGE
610
REGULATOR
620
REGULATOR
630
LOGIC
BLOCK
640
LOGIC
BLOCK
650

FIG. 6

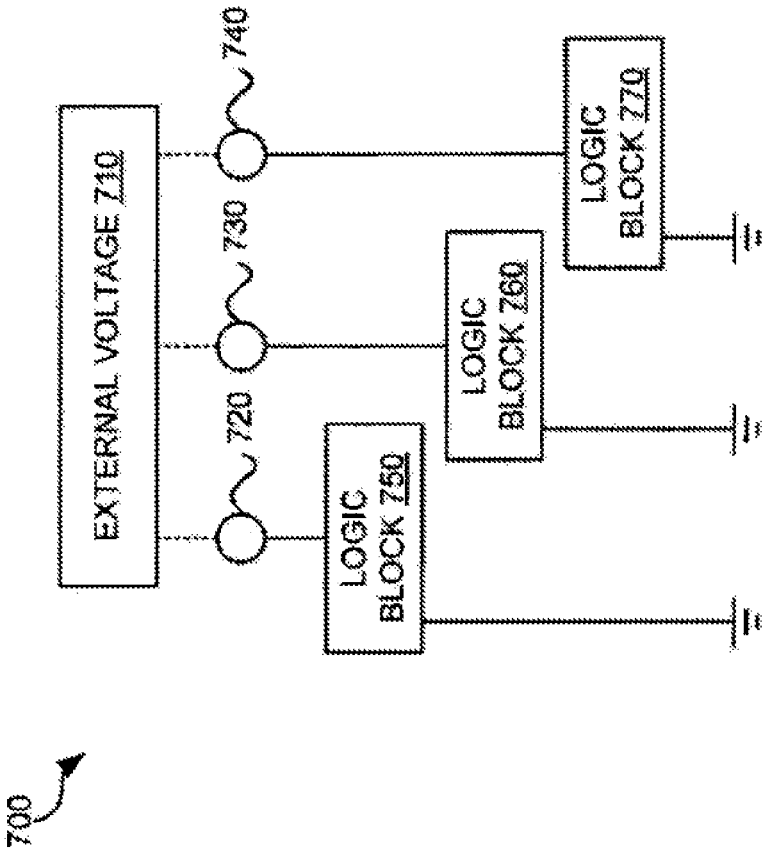
700
EXTERNAL VOLTAGE 710
720
730
740
LOGIC BLOCK 750
LOGIC BLOCK 760
LOGIC BLOCK 770

FIG. 7

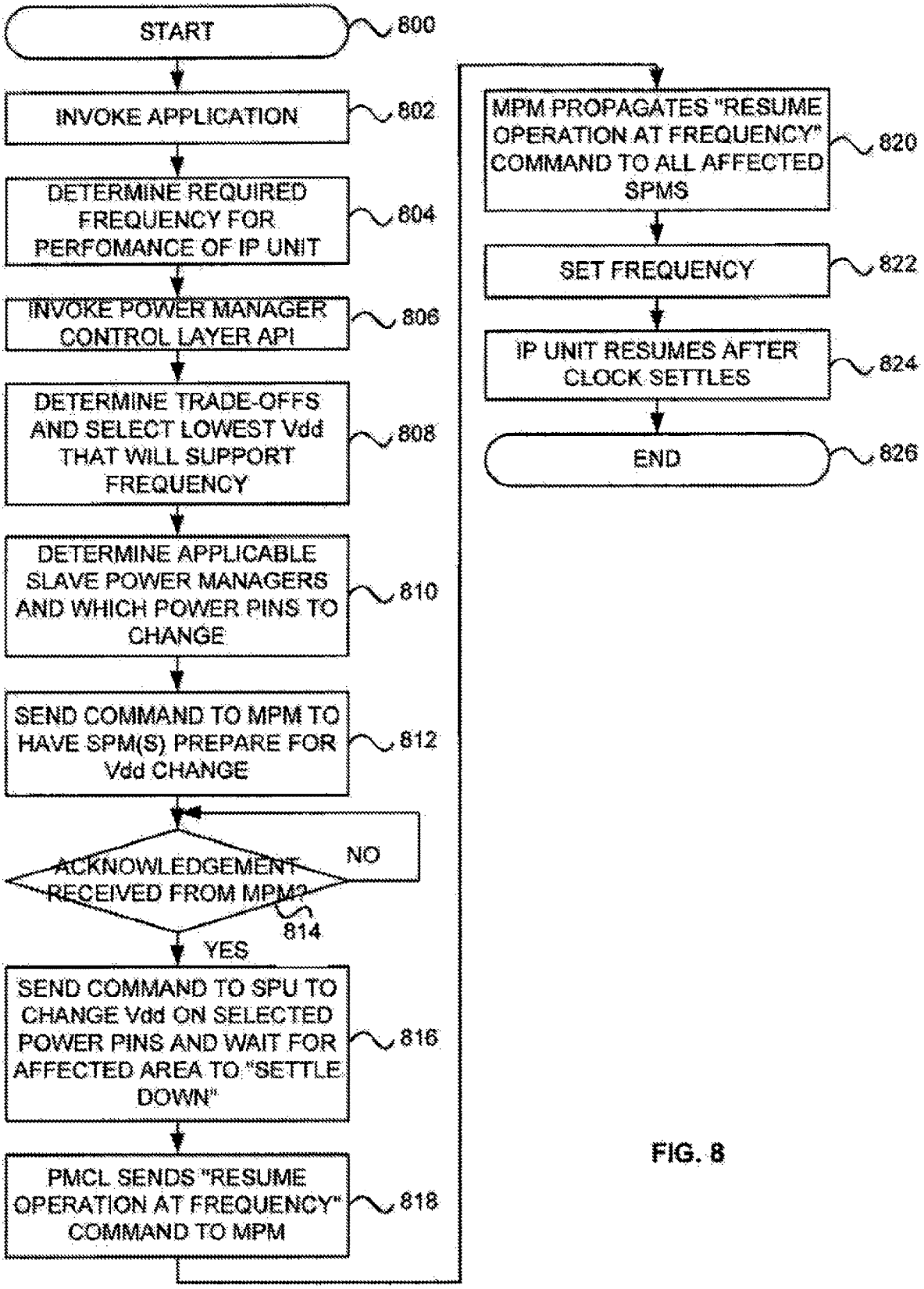
START
800
INVOKE APPLICATION
802
DETERMINE REQUIRED FREQUENCY FOR PERFOMANCE OF IP UNIT
804
INVOKE POWER MANAGER CONTROL LAYER API
806
DETERMINE TRADE-OFFS AND SELECT LOWEST Vdd THAT WILL SUPPORT FREQUENCY
808
DETERMINE APPLICABLE SLAVE POWER MANAGERS AND WHICH POWER PINS TO CHANGE
810
SEND COMMAND TO MPM TO HAVE SPM(S) PREPARE FOR Vdd CHANGE
812
ACKNOWLEDGEMENT RECEIVED FROM MPM?
814
NO
YES
SEND COMMAND TO SPU TO CHANGE Vdd ON SELECTED POWER PINS AND WAIT FOR AFFECTED AREA TO "SETTLE DOWN"
816
PMCL SENDS "RESUME OPERATION AT FREQUENCY" COMMAND TO MPM
818
MPM PROPAGATES "RESUME OPERATION AT FREQUENCY" COMMAND TO ALL AFFECTED SPMS
820
SET FREQUENCY
822
IP UNIT RESUMES AFTER CLOCK SETTLES
824
END
826

FIG. 8

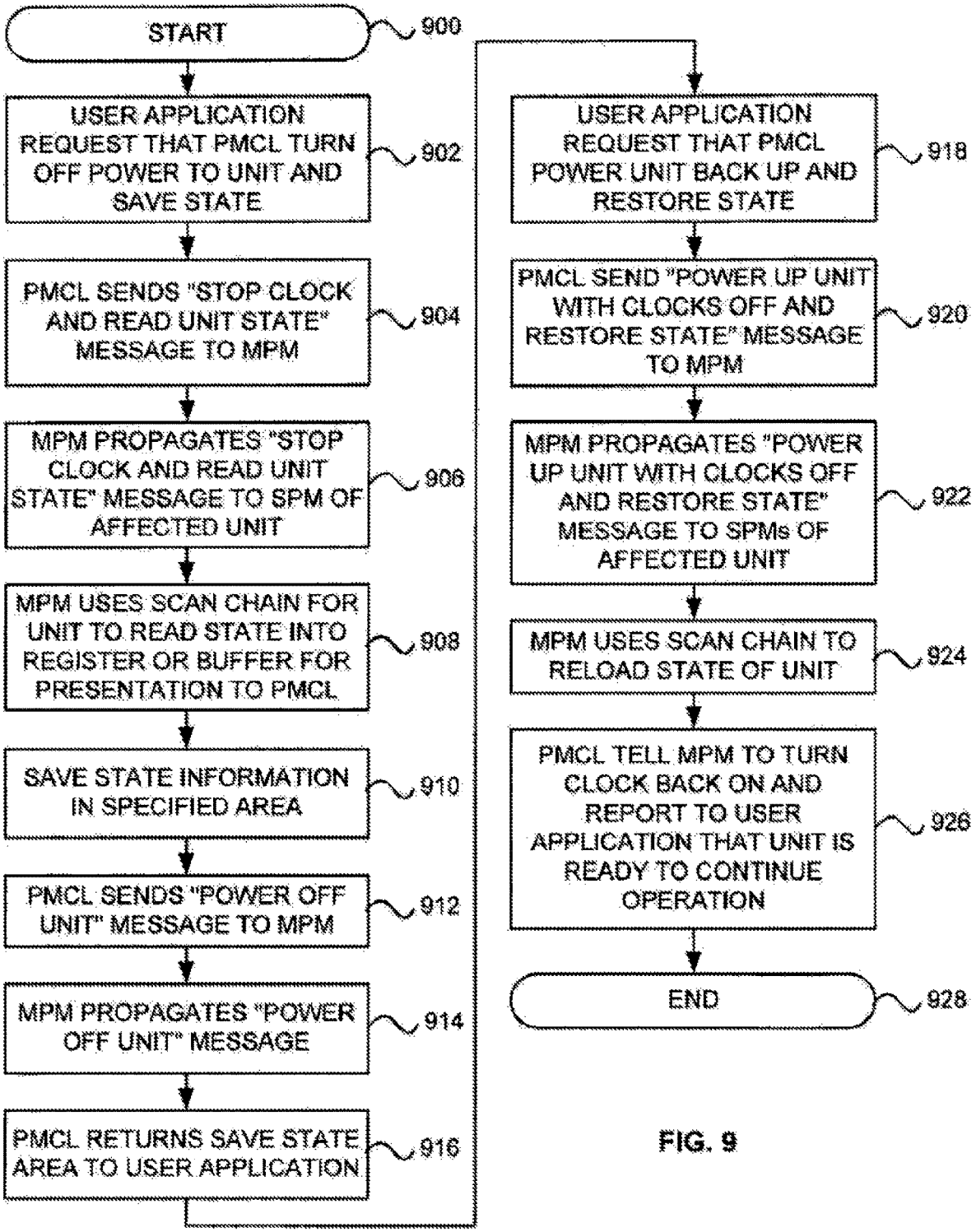
START
900
USER APPLICATION REQUEST THAT PMCL TURN OFF POWER TO UNIT AND SAVE STATE
902
PMCL SENDS "STOP CLOCK AND READ UNIT STATE" MESSAGE TO MPM
904
MPM PROPAGATES "STOP CLOCK AND READ UNIT STATE" MESSAGE TO SPM OF AFFECTED UNIT
906
MPM USES SCAN CHAIN FOR UNIT TO READ STATE INTO REGISTER OR BUFFER FOR PRESENTATION TO PMCL
908
SAVE STATE INFORMATION IN SPECIFIED AREA
910
PMCL SENDS "POWER OFF UNIT" MESSAGE TO MPM
912
MPM PROPAGATES "POWER OFF UNIT" MESSAGE
914
PMCL RETURNS SAVE STATE AREA TO USER APPLICATION
916
USER APPLICATION REQUEST THAT PMCL POWER UNIT BACK UP AND RESTORE STATE
918
PMCL SEND "POWER UP UNIT WITH CLOCKS OFF AND RESTORE STATE" MESSAGE TO MPM
920
MPM PROPAGATES "POWER UP UNIT WITH CLOCKS OFF AND RESTORE STATE" MESSAGE TO SPMs OF AFFECTED UNIT
922
MPM USES SCAN CHAIN TO RELOAD STATE OF UNIT
924
PMCL TELL MPM TO TURN CLOCK BACK ON AND REPORT TO USER APPLICATION THAT UNIT IS READY TO CONTINUE OPERATION
926
END
928

FIG. 9

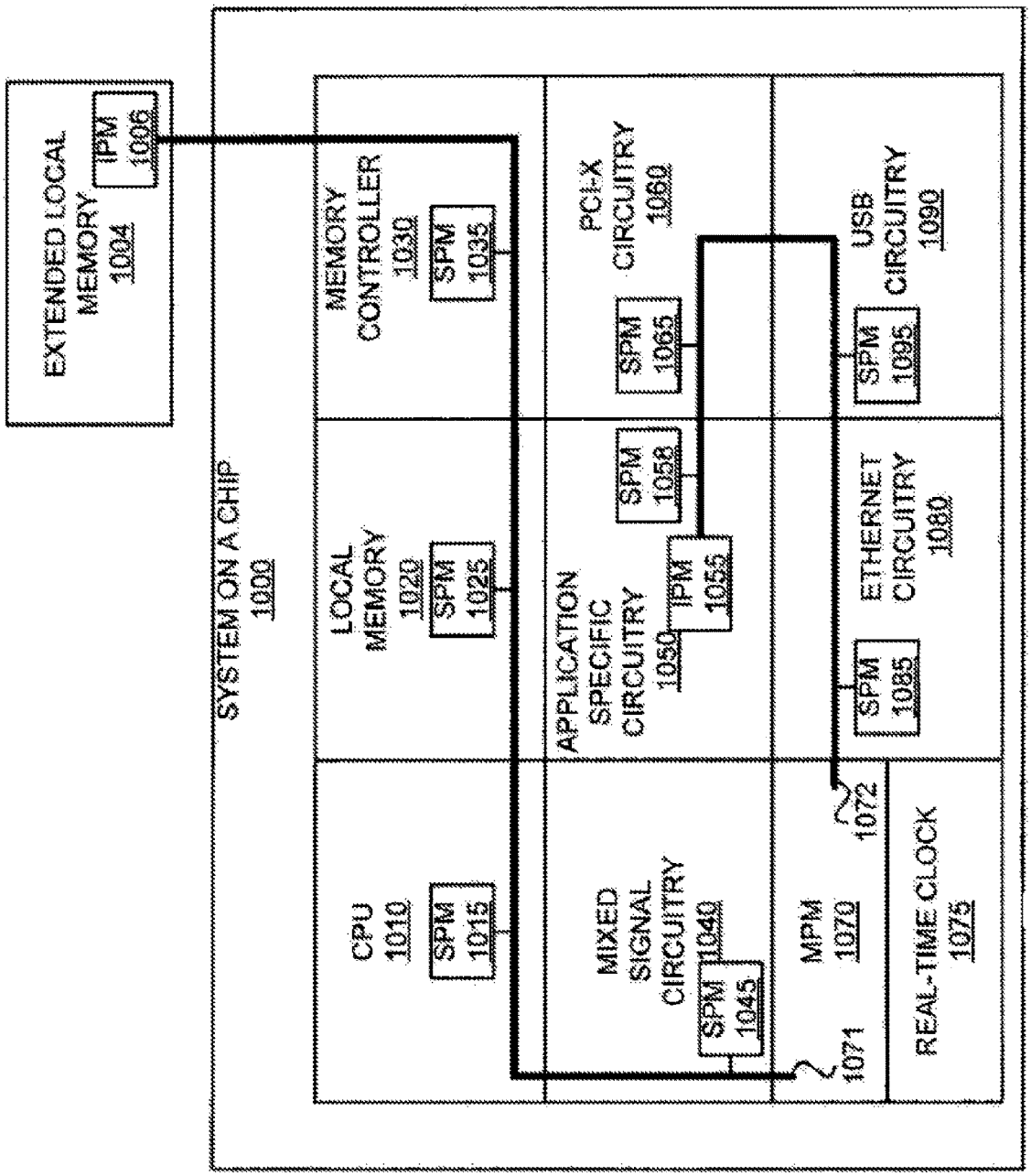
EXTENDED LOCAL MEMORY 1004
IPM 1006
SYSTEM ON A CHIP 1000
CPU 1010
SPM 1015
LOCAL MEMORY 1020
SPM 1025
MEMORY CONTROLLER 1030
SPM 1035
MIXED SIGNAL CIRCUITRY 1040
SPM 1045
APPLICATION SPECIFIC CIRCUITRY 1050
IPM 1055
SPM 1058
PCI-X CIRCUITRY 1060
SPM 1065
MPM 1070
1071
1072
ETHERNET CIRCUITRY 1080
SPM 1085
USB CIRCUITRY 1090
SPM 1095
REAL-TIME CLOCK 1075

FIG. 10

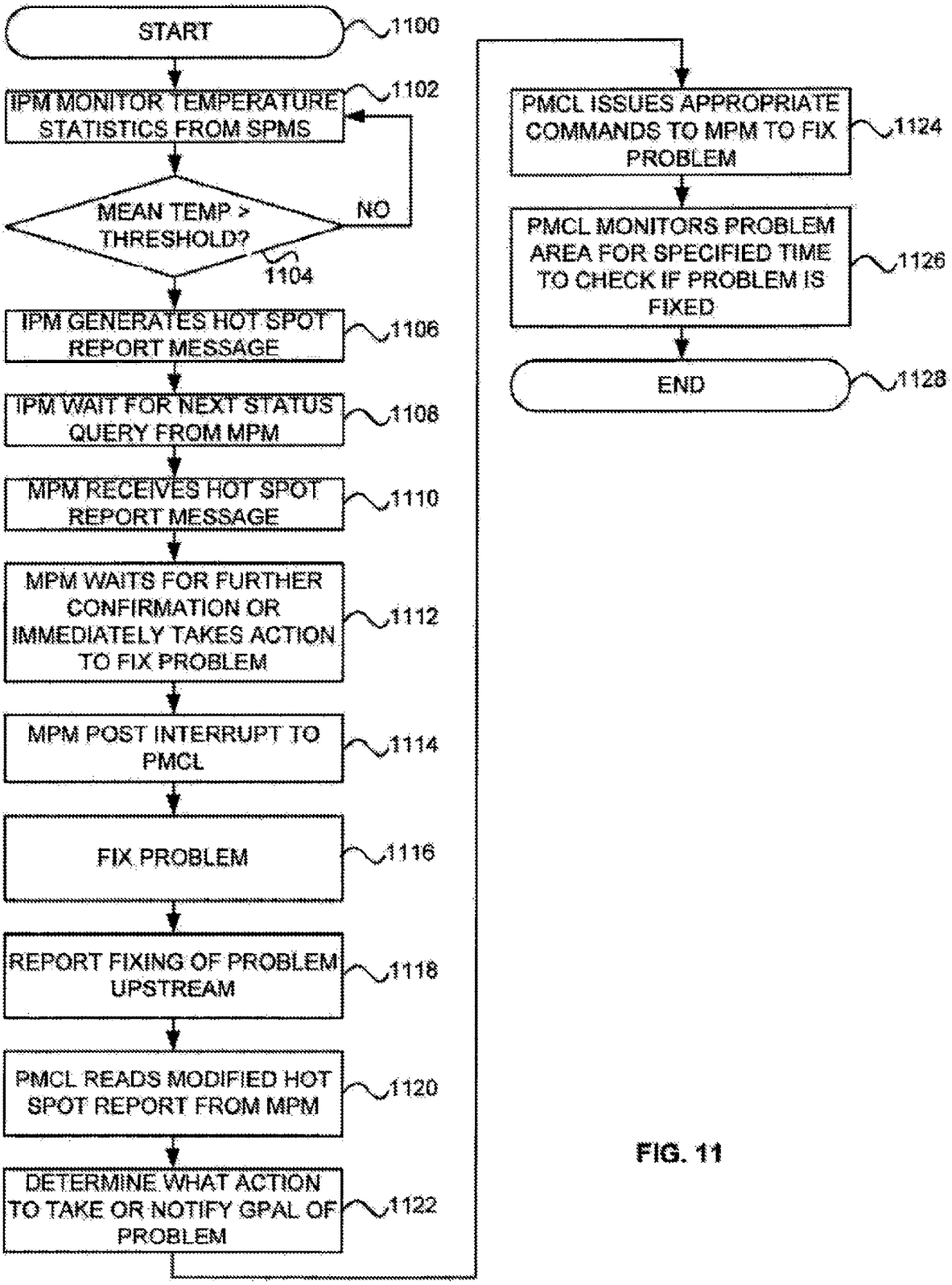
START
1100
IPM MONITOR TEMPERATURE STATISTICS FROM SPMS
1102
MEAN TEMP > THRESHOLD?
NO
1104
IPM GENERATES HOT SPOT REPORT MESSAGE
1106
IPM WAIT FOR NEXT STATUS QUERY FROM MPM
1108
MPM RECEIVES HOT SPOT REPORT MESSAGE
1110
MPM WAITS FOR FURTHER CONFIRMATION OR IMMEDIATELY TAKES ACTION TO FIX PROBLEM
1112
MPM POST INTERRUPT TO PMCL
1114
FIX PROBLEM
1116
REPORT FIXING OF PROBLEM UPSTREAM
1118
PMCL READS MODIFIED HOT SPOT REPORT FROM MPM
1120
DETERMINE WHAT ACTION TO TAKE OR NOTIFY GPAL OF PROBLEM
1122
PMCL ISSUES APPROPRIATE COMMANDS TO MPM TO FIX PROBLEM
1124
PMCL MONITORS PROBLEM AREA FOR SPECIFIED TIME TO CHECK IF PROBLEM IS FIXED
1126
END
1128

FIG. 11

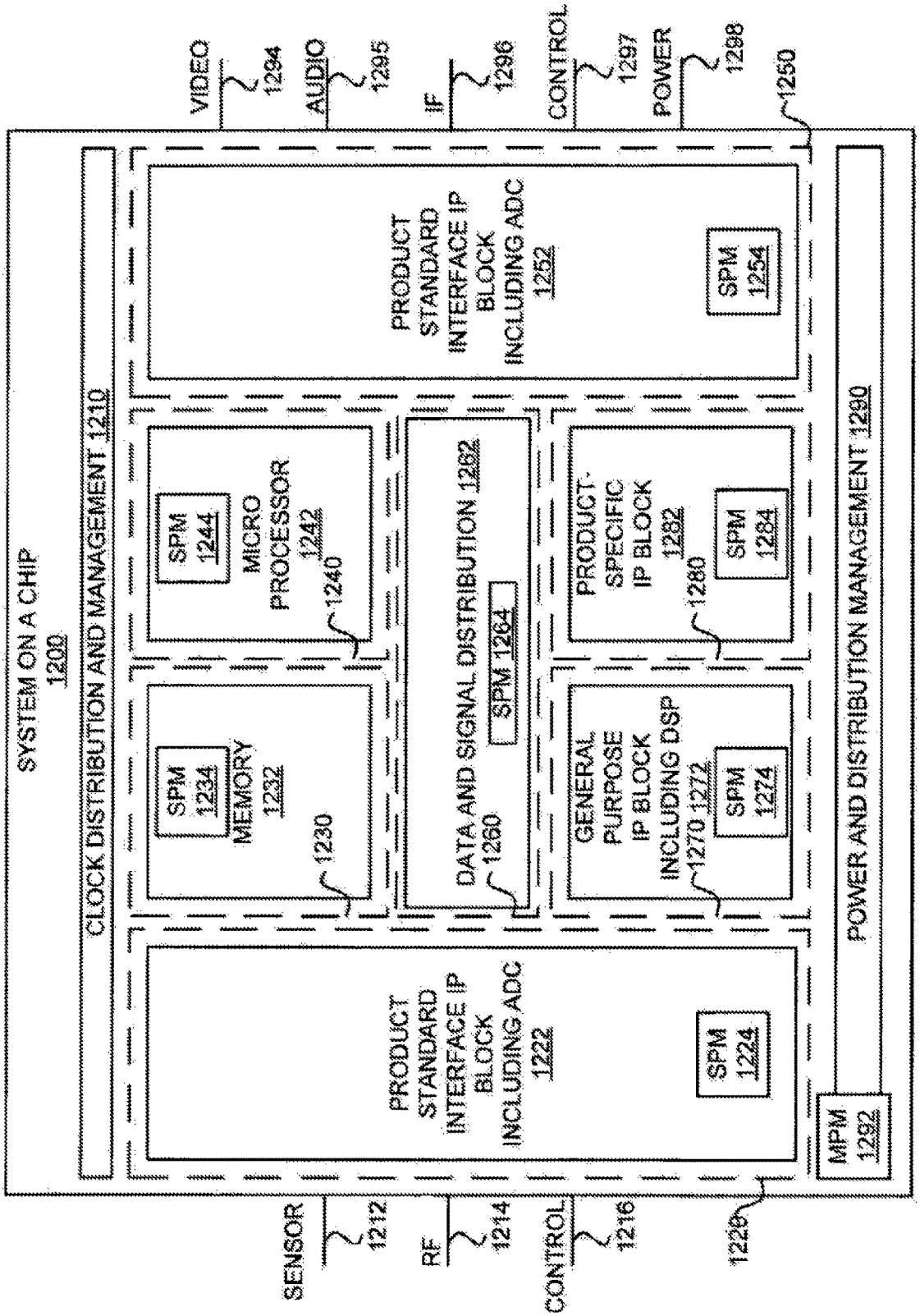
SYSTEM ON A CHIP
1200
CLOCK DISTRIBUTION AND MANAGEMENT 1210
VIDEO
1294
AUDIO
1295
IF
1296
CONTROL
1297
POWER
1298
1250
PRODUCT STANDARD INTERFACE IP BLOCK INCLUDING ADC
1252
SPM
1254
SPM
1244
MICRO PROCESSOR
1242
1240
DATA AND SIGNAL DISTRIBUTION 1262
SPM 1264
PRODUCT-SPECIFIC IP BLOCK
1282
SPM
1284
1280
SPM
1234
MEMORY
1232
1230
GENERAL PURPOSE IP BLOCK INCLUDING DSP
1270 1272
SPM
1274
1260
PRODUCT STANDARD INTERFACE IP BLOCK INCLUDING ADC
1222
SPM
1224
POWER AND DISTRIBUTION MANAGEMENT 1290
MPM
1292
SENSOR
1212
RF
1214
CONTROL
1216
1220

FIG. 12

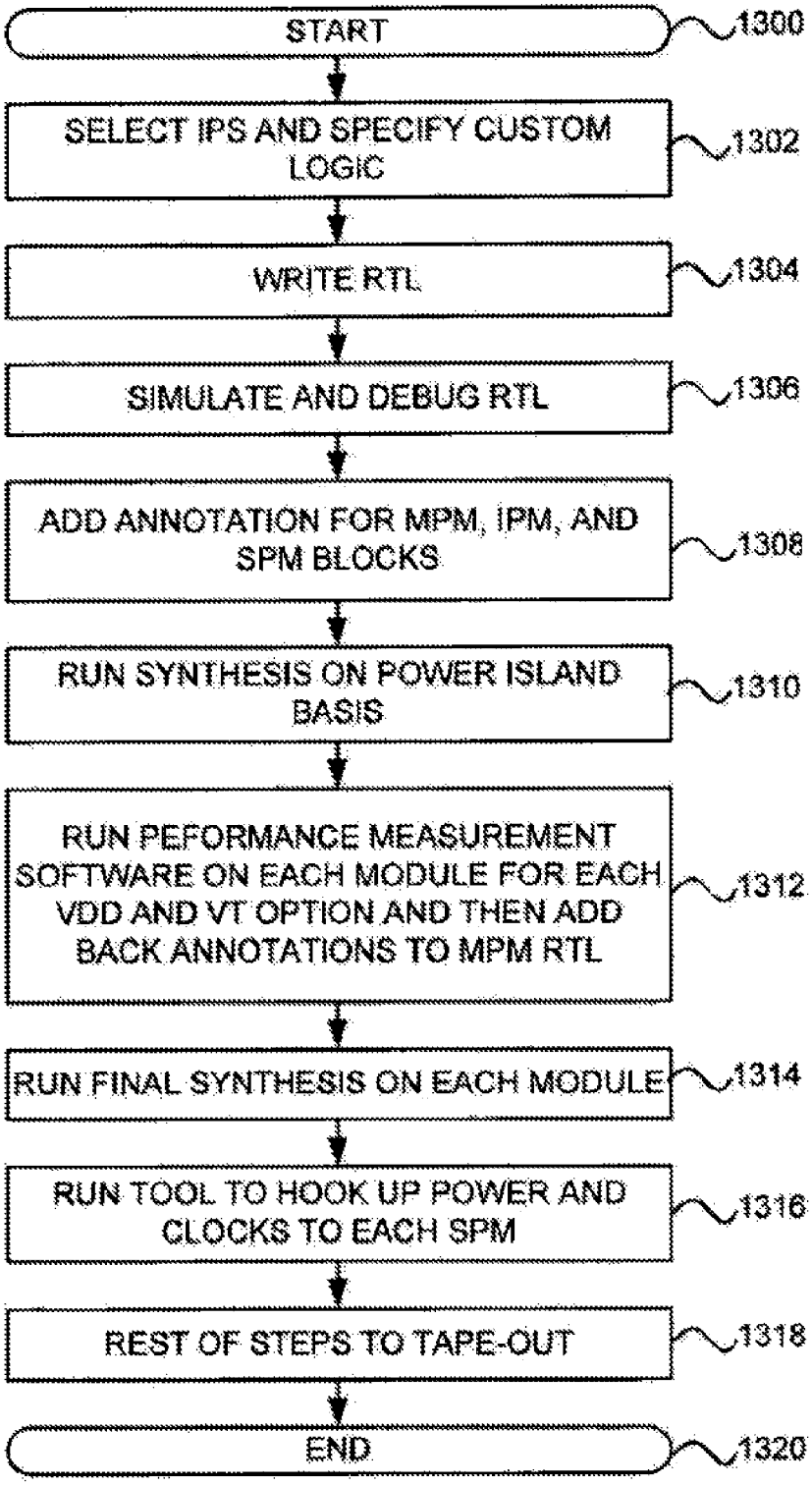
START
1300
SELECT IPS AND SPECIFY CUSTOM LOGIC
1302
WRITE RTL
1304
SIMULATE AND DEBUG RTL
1306
ADD ANNOTATION FOR MPM, IPM, AND SPM BLOCKS
1308
RUN SYNTHESIS ON POWER ISLAND BASIS
1310
RUN PEFORMANCE MEASUREMENT SOFTWARE ON EACH MODULE FOR EACH VDD AND VT OPTION AND THEN ADD BACK ANNOTATIONS TO MPM RTL
1312
RUN FINAL SYNTHESIS ON EACH MODULE
1314
RUN TOOL TO HOOK UP POWER AND CLOCKS TO EACH SPM
1316
REST OF STEPS TO TAPE-OUT
1318
END
1320

FIG. 13

POWER MANAGERS FOR AN INTEGRATED CIRCUIT

RELATED APPLICATIONS

The present application is a continuation of U.S. application Ser. No. 16/226,917, filed Dec. 20, 2008, which is a continuation of U.S. application Ser. No. 15/490,557, filed Apr. 18, 2017, now U.S. Pat. No. 10,243,542, which is a continuation of U.S. application Ser. No. 14/865,905, filed Sep. 25, 2016, now U.S. Pat. No. 9,660,616, which is a continuation of U.S. application Ser. No. 14/324,297, filed Jul. 7, 2014, now U.S. Pat. No. 9,166,412, which is a continuation of U.S. application Ser. No. 13/164,362, filed Jun. 20, 2011, now U.S. Pat. No. 8,782,590, which is a continuation of U.S. application Ser. No. 12/332,529, filed Dec. 11, 2008, now U.S. Pat. No. 7,996,811, which is a continuation of U.S. application Ser. No. 12/176,645, filed Jul. 21, 2008, now U.S. Pat. No. 7,945,885, which is a continuation of U.S. application Ser. No. 11/336,097, filed Jan. 20, 2006, now U.S. Pat. No. 7,415,680, which is a continuation of U.S. application Ser. No. 10/840,893, filed May 7, 2004, now U.S. Pat. No. 7,051,306, which claims the benefit of U.S. Provisional Application No. 60/468,742, filed May 7, 2003, the entire teachings of the above applications are incorporated herein by reference in their entireties.

BACKGROUND OF THE INVENTION

1. Field of the Invention

The present invention relates generally to integrated circuits, and more particularly to managing power on integrated circuits using power islands.

2. Description of the Prior Art

One design goal for integrated circuits is to reduce power consumption. Devices with batteries such as cell phones and laptops especially need a reduction in power consumption in the integrated circuit to extend the charge of the battery. Additionally, a reduction in power consumption prevents overheating and lowers the heat dissipation of the integrated circuit, which in some cases, eliminates or simplifies the heat sinks and/or fans for the integrated circuit.

Some integrated circuits are designed using building blocks of library cells. These library cells are blocks of circuitry performing a function. Some examples of library cells are NAND gates, multiplexers, decoders, comparators, and memory.

In a "full-custom" flow, the integrated circuit is designed at the lowest level such as at the individual transistors, capacitors, and resistors level. The "full-custom" flow may use library cells that are internally developed. The integrated circuit can have optimal performance because the integrated circuit is designed in great detail at the lowest level. However, some problems with the "full-custom" flow are the long time and expensive costs associated with designing at such a detailed level. Furthermore, the "full-custom" flow is cumbersome because the design is at the lowest level.

In a "standard-cell" flow, the integrated circuit is designed using library cells acquired from a third party or other outside source. These library cells are standardized at the logic or function level. The design time for the standard-cell flow is reduced because the library cells are already pre-designed and pre-tested.

In one example for designing an integrated circuit, the library cells are selected, and the custom logic is specified to build the integrated circuit. The register transfer level (RTL) for the integrated circuit is then written for simulation and debugging. After simulation and debugging, the synthesis is run for the integrated circuit. Performance measurement software is executed to determine performance of the integrated circuit. The final synthesis of the integrated circuit can then be run based on the optimal performance of the integrated circuit.

One problem with many integrated circuits is that power consumption is not efficiently utilized. For example, the entire integrated circuit may operate at a maximum frequency just to support an application needing that maximum frequency, while other portions of the integrated circuit can operate at a lower frequency. In another example, inactive circuitry within the integrated circuit consumes power and increases the likelihood of leakage. Inefficient power consumption may also adversely affect performance of the integrated circuit.

With the growing complexity of integrated circuits, the reduction of power consumption is even more important when the integrated circuit employs more functionality. One example of an integrated circuit is a system-on-a-chip that includes a microprocessor, memory, I/O interfaces, and an analog-to-digital converter all in a single chip. With many different types of functionality employed within a single chip, the system-on-a-chip consumes even more power than single function integrated circuits.

Some prior integrated circuits have employed voltage islands or multiple clocks to lower power consumption. One problem with these integrated circuits is that the voltages in the power island and the frequencies of the multiple clocks are static. The voltages and the frequencies do not dynamically change based on the needs and operation of the integrated circuit.

SUMMARY OF THE INVENTION

The invention addresses the above problems by providing power managers for an integrated circuit. A system for an integrated circuit comprising a plurality of power islands includes a first power manager and a second power manager. The first power manager manages a first power consumption for the integrated circuit based on needs and operation of the integrated circuit. The second power manager communicates with the first power manager and manages a second power consumption for one of the power islands.

The first power manager may determine power trade offs between the power islands. The second power manager may determine status information about the one of the power islands and may transmit the status information to the first power manager. The first power manager may receive the status information and may manage the first power consumption for the integrated circuit using the status information. The first power manager may determine status information about the integrated circuit and may transmit the status information to power interface software. The first power manager may receive a message from power interface software to change the first power consumption for the integrated circuit. The first power manager may transmit a message to the second power manager and the second power manager may receive and process the message to change the second power consumption for the one of the power islands.

The second power manager may register capabilities of the second power manager with the first power manager.

BRIEF DESCRIPTION OF THE DRAWINGS

FIG. **1** is a block diagram of a system for managing power in an integrated circuit in an exemplary implementation of the invention;

FIG. **2** is a diagram of a system for managing power in an integrated circuit in an exemplary implementation of the invention;

FIG. **3** is an illustration for low leakage circuitry for a low power standard cell logic block in an exemplary implementation of the invention;

FIG. **4** is a diagram of a power island in an exemplary implementation of the invention;

FIG. **5** is a flowchart from an application request to a slave power manager action in an exemplary implementation of the invention;

FIG. **6** is an illustration of internal circuitry for a smart power unit in an exemplary implementation of the invention;

FIG. **7** is an illustration of external circuitry for a smart power unit in an exemplary implementation of the invention;

FIG. **8** is a flowchart from an application request to a smart power unit action in an exemplary implementation of the invention;

FIG. **9** is a flowchart for saving an IP unit's state prior to powering down and restoring the IP unit's state when powering up in an exemplary implementation of the invention;

FIG. **10** is diagram of a system on a chip and an extended local memory in an exemplary implementation of the invention;

FIG. **11** is a flowchart for generating a "hot spot" report from an intermediate power manager to a power management control layer in an exemplary implementation of the invention.

FIG. **12** is a diagram of a system on a chip in an exemplary implementation of the invention; and

FIG. **13** is a flowchart for building a chip with power islands in an exemplary implementation of the invention.

DETAILED DESCRIPTION OF THE INVENTION

As shown in the exemplary drawings wherein like reference numerals indicate like or corresponding elements among the figures, exemplary embodiments of a system and method according to the present invention are described below in detail. It is to be understood, however, that the present invention may be embodied in various forms. Therefore, specific details disclosed herein are not to be interpreted as limiting, but rather as a basis for the claims and as a representative basis for teaching one skilled in the art to employ the present invention in virtually any appropriately detailed system, structure, method, process or manner.

FIG. **1** depicts a block diagram of a system **100** for managing power in an integrated circuit **110** in an exemplary implementation of the invention. The system **100** includes an integrated circuit **110** and a power manager **120**. The integrated circuit **110** is any electronic device that is instantiated into silicon and/or related manufacturing materials. One example of the integrated circuit **110** is a system-on-a-chip. The integrated circuit **110** includes multiple IP units, which are blocks of circuitry performing specific functions.

The integrated circuit **110** includes four power islands **112**, **114**, **116**, and **118**. FIG. **1** only depicts four power islands **112**, **114**, **116**, and **118** for the sake of simplicity. Other embodiments of the integrated circuit **110** include a plurality of power islands **112**, **114**, **116**, and **118**. The power islands **112**, **114**, **116**, and **118** are coupled to a bus **125**.

A power island **112**, **114**, **116**, and **118** is any section, delineation, partition, or division of the integrated circuit **110** where power consumption is controlled within the section, delineation, partition, or division. In some embodiments, the power islands **112**, **114**, **116**, and **118** are delineated based on geographic factors of the integrated circuit **110**. In some embodiments, the power islands **112**, **114**, **116**, and **118** are delineated based on functional IP units of the integrated circuit **110**. In one example depicted in FIG. **10**, power islands are delineated by memory, a microprocessor, and separate IP blocks. In some embodiments, the power islands **112**, **114**, **116**, and **118** are asynchronous or synchronous to each other. In some embodiments, the power islands **112**, **114**, **116**, and **118** comprise sub-islands of power to provide further specificity in controlling power in the integrated circuit **110**. In some embodiments, each of the power islands **112**, **114**, **116**, and **118** supports multiple clock domains with its own control. In some embodiments, the clocks within the power islands **112**, **114**, **116**, and **118** are variable.

In some embodiments, each of the power islands **112**, **114**, **116**, and **118** includes power control circuitry. Power control circuitry is any circuitry configured to control power within one of the power islands **112**, **114**, **116**, and **118**. Some examples of power control circuitry include circuitry for level shifting, signal isolation, Vdd multiplexing, clock multiplexing, and dynamic back bias. In some embodiments, the power control circuitry is included in a standard cell library for standard cell design of the integrated circuit **110**.

The power manager **120** is also coupled to the bus **125**. One example of the bus **125** is a power command bus described in further detail below in FIG. **10**. Other embodiments of the system **100** include numerous variations in which the power manager **120** and the power islands **112**, **114**, **116**, and **118** are interconnected. The power manager **120** is any circuitry, device, or system configured to (1) determine a target power level for one of the power islands **112**, **114**, **116**, and **118** where power consumption is independently controlled within each of the power islands **112**, **114**, **116**, and **118**, (2) determine action to change a consumption power level of the one of the power islands **112**, **114**, **116**, and **118** to the target power level, and (3) perform the action to change the consumption power level of the one of the power islands **112**, **114**, **116**, and **118** to the target power level. The power manager **120** can dynamically change the power consumption of the power islands **112**, **114**, **116**, and **118** based on the needs and operation of the integrated circuit **110**. The target power level is a desired, calculated, or specified power consumption of the power islands **112**, **114**, **116**, and **118**. Some examples of the power manager **120** are the slave power manager (SPM), the intermediate power manager (IPM), and the master power manager (MPM), which are described in further detail below. The power manager **120** may be a hierarchy or group of power managers **120**. Although FIG. **1** depicts the power manager **120** as being located outside the integrated circuit **110**, other embodiments may have the power manager **120** located in the integrated circuit **110**. In other embodiments, the power manager **120** may be distributed among multiple power managers that are on or off the integrated circuit **110** or integrated with a CPU. The action is any instruction, message, process, function, signal, or variable that controls power consumption in the power island **112**, **114**, **116**, and

118. Some examples of actions are clock gating and dynamic clock selection. Another example of an action is modifying a clock frequency of one of the power islands **112**, **114**, **116**, and **118**. Another example of an action is to modify voltage of one of the power islands **112**, **114**, **116**, and **118** such as dynamic voltage source, Vdd, selection. Another example of an action is to control dynamic leakage by controlling variable Vt transistors.

FIG. **2** depicts a diagram of a system **200** for managing power in an integrated circuit **250** in an exemplary implementation of the invention. The system **200** includes an embedded firmware stack **210** and an integrated circuit **250**. The embedded firmware stack **210** includes software layers that run on a central processing unit (CPU). In some embodiments, the embedded firmware stack **210** may include an application layer **212**, an operating system (OS) sub-system **216**, a power management control layer (PMCL) **218**, a real-time operating system (RTOS) **220**, I/O drivers **222**, and power manager (PM) firmware **224** for the MPM, IPM and/or SPM.

The integrated circuit **250** includes a power island **260**, a power island **270**, and a MPM **280**. The power island **260** includes a low power standard cell logic block **262** and a SPM **264**. The power island **270** includes a low power memory block **272** and a SPM **274**. The low power standard cell logic block **262** and the low power memory block are coupled to an interface **265**. The MPM **280** is coupled to the PMCL **218**, the SPM **264**, and the SPM **274**.

In some embodiments, the application layer **212** includes a global power application layer (GP AL) **214**. This GP AL **214** may be useful for more complex applications. If the GPAL **214** is present, then all calls to the PMCL **218** application program interfaces (API) are first directed to the GPAL **214**. Both the GPAL **214** and the PMCL **218** provide power management for the integrated circuit **250**. In some embodiments, the GP AL **214** and/or the PMCL **218** monitor what load is on each power island **260** and **270**. Also, the GPAL **214** and/or the PMCL **218** may build a history of power levels on the power island **260** and **270** and store the history data in a database. The GPAL **214** and the PMCL **218** may also provide data for on-demand resources interested in the power levels of the power islands **260** and **270**.

In some embodiments when the GP AL **214** is present, the GP AL **214** provides guidance to the PMCL **218** in making local decisions for power management of the integrated circuit **250**. In some embodiments, the GPAL **214** and the PMCL **218** include complex algorithms for a static schedule. The GPAL **214** and the PMCL **218** provide the facility for use code to interact and control power behavior and parameters including providing a database and statistics.

The PMCL **218** also collects information from the MPM **280** and provides commands to the MPM **280** for possible IPMs, SPMs **264** and **274**, and the power islands **260** and **270**. Some of the commands may be to power on/off, change the power level, or change the frequency of the power islands **260** and **270**. In some embodiments with a smart power unit (SPU) **290**, the GP AL **214** and the PMCL **218** are responsible for communication with the SPU **290** to implement a power policy and collect information on the actual power supply. The SPU **290** is described in further detail below in FIGS. **6-8**. In some embodiments, the GPAL **214** and the PMCL **218** provides sockets for existing power management techniques.

The power manager firmware **224** is firmware executed by the master power manager **280**, the intermediate power manager, and the slave power managers **264** and **274**.

The MPM **280** is any circuitry configured to control the "global" power behavior of the entire integrated circuit **250**. In some embodiments, there are multiple MPMs **280** that control the power behavior of the entire integrated circuit **250**. In some embodiments, the MPM **280** communicates with existing IPMs and SPMs **264** and **274** to control power within the power islands **260** and **270**. The MPM **280** may receive status information about the power islands **260** and **270** from the SPMs **264** and **274** and the IPMs. The MPM **280** may also determine power trade-offs between the IPMs and the SPMs **264** and **274**.

The MPM **280** may also provide a main interface to the PMCL **218** firmware. In some embodiments, the MPM **280** communicates with the PMCL **218** to accept commands (e.g., memory mapped commands) and provide status information, about the power within the integrated circuit **250**. In some embodiments, the MPM **280** communicates with the PMCL **218** through the main bus for the integrated circuit **250**. The MPM **280** may also register each of the SPMs **264** and **274** and IPMs and capabilities with the PMCL **218**. Some operations of the MPM **280** are described in further detail below in FIGS. **5**, **8**, **9**, and **11**. In some embodiments, the MPM **280** reads and writes scan chains for state save and restore along with the local logic analyzer ability.

Some embodiments may include an IPM (not shown) that coordinates SPMs **264** and **274** on behalf of the MPM **280**. In some embodiments, the IPM controls and coordinates power behavior on portions of the area controlled by the MPM **280**. In some embodiments, the IPM controls the SPMs **264** and **274** that are on a separate chip from the MPM **280**.

The SPM **264** is any circuitry configured to control power within a power island **264** in the integrated circuit **250**. One example of the SPM **264** is an IP block that controls power within a power island **264** in the integrated circuit **250**. The SPM **264** may include signal buffering, level shifting, and signal isolation. In some embodiments, the SPM **264** is integrated into scan chains to provide easier implementation and integration. Also, in some embodiments, the SPM **264** has a very small "footprint" with a low gate count and low power. In some embodiments, the SPM **264** comprises a command interface to communicate status information, service requests, and commands. Some of the commands are load, sleep, and idle. The SPM **264** may also recognize its own address to allow for multi-drop bussing.

In some embodiments, the SPM **264** has registration capabilities. For registration at power-up, the SPM **264** uses callback registration that is typically used for off chip SPMs and IPMs. For static registration when the integrated circuit is generated for on chip SPMs, the SPM **264** registers what the SPM **264** can do, what the IPM can do, and the type of commands that the SPM **264** or IPM can service. The SPM **264** may also have save and restore functions for power off periods. The SPM **264** may have watch-dog timer(s). In some embodiments, the SPM **264** has a debug interface coordination to the power island **260**. The SPM **264** may also monitor local state and collect information for components within the power island **260**. The SPM **264** may also locally control Vdd, clocks for frequency selection, and dynamic back biasing. The description for the SPM **264** also applies to the SPM **274** for the power island **270**.

In some embodiments, the SPM **264** checks whether an event occurs when the collected information from the power island **260** crosses a threshold or exceeds a range. In some embodiments, the SPM **264**, IPMs, or the MPM **280** monitors power consumption levels of the power island **260** to check whether the power consumption levels cross a thresh-

old level or exceed a range. A power consumption level is any information, data, or statistic that indicate the power consumed in a power island **260**. Some examples of power consumption levels are temperature and power. The threshold or range may be programmable. The SPM **264** may report the event asynchronously, or another element such as the MPM **280** may solicit whether an event has occurred. The event may also be a multi-level test such as the conditions occur at a greater than a given, programmable frequency or exceed a given, programmable duration.

In some embodiments, the low power standard cell logic block **262** one example of a standard cell library that may be included in the power island **260**. In some embodiments, the standard cell library is optimized for lower power. The standard cell library may be characterized over a range of operating voltages. In some embodiments, the standard cell library includes synchronous circuits and/or asynchronous circuits. In some embodiments, the standard cell library includes static circuits and/or encapsulated, dynamic logic circuits. The standard cell library may also include multiple voltage domain interface circuits such as level shifters and signal isolation circuits. The standard cell library may also have a multi-threshold design and characterization such as standard Vt, high Vt, low Vt, and variable Vt circuits. The standard cell library may also include data retention (shadow) circuits and anti-glitch circuits. The standard cell library may also include low leakage "sleep" circuits. FIG. **3** depicts an illustration of low leakage circuitry **300** for the low power standard cell logic block **262** in an exemplary implementation of the invention.

FIG. **4** depicts a diagram of the power island **270** in an exemplary implementation of the invention. The power island **270** includes a low power memory block **272** and the SPM **274**. The low power memory block **272** includes banked architectures **410**, **420**, **430**, and **440** for memories and sleep, power down circuitry **450**. In some embodiments, the memory in the power island **270** is RAM and/or ROM. Some examples of the RAM are the SRAM compilers such as single-port, 2-port, and dual-port. Some examples of the ROM are ROM compilers. Some memories in the power island **270** are optimized for low power such as the low power memory block **272**. In one embodiment, the low power memory block **272** includes multiple bank architectures via the compiler such as banked architectures **410**, **420**, **430**, and **440**. The memories in the power island **270** may also include sleep, power down circuitry **450** for low power modes such as sleep, nap, and full power down. The memories in the power island **270** may also include programmable read/write ports. The memories in the power island **270** may also be an asynchronous and/or synchronous design.

In some embodiments, the system **200** also includes a smart power unit (SPU) **290**. In some embodiments, the SPU **290** is off-chip to the integrated circuit **250**. The SPU **290** is an external unit configured to control power and clock distribution to the integrated circuit. The circuitry of the SPU is described in further detail below in FIGS. **7** and **8**.

FIG. **5** depicts a flowchart from an application request to an SPM action in an exemplary implementation of the invention. FIG. **5** begins in step **500**. In step **502**, an application is invoked such as playing a movie. In step **504**, the application determines the required frequency for performance of an IP unit. For example, the application determines a specified frequency in MHz for IP unit for an MPEG decoder. In some embodiments, when the IP unit is totally asynchronous, the required frequency will be an artificial measure of performance. In some embodiments that have multiple clocks involved, the minimum performance for each clock is specified.

In step **506**, the application invokes the PMCL **218** API call. One example of this call is "Set_Rate (unit Y, N MHz, degree of dynamic power management (DPM) allowed, DPM threshold, other information to allow DPM trade-offs, starting back bias for SPMs with dynamic bias, wait for power up flag)." In this example, the other information could be "no power off, use high Vt and clocks off instead" and "major waits are about 10 us, with a 400 ns threshold." In some embodiments with multiple clocks, the PMCL **218** API call allows the application to specify all required frequencies.

The PMCL **218** determines possible trade-offs available for the unit and selects a frequency rate, Vdd, and Vt if applicable for the unit that best meets the given requirements in step **508** and determines the applicable SPMs **264** and **274** in step **510**. In some embodiments, the MPM **280** or IPM performs steps **508** and **510**. In some embodiments for multiple clocks, the Vdd and Vt specified would allow for all specified clocks to meet or exceed their required frequencies.

In step **512**, the PMCL **218** then writes the desired setting for the SPMs **264** and **274** to the MPM **280** (or IPM). In step **514**, the MPM **280** (or IPM) converts the request into one or more commands for the SPMs **264** and **274** (or IPM) associated with the unit.

In step **516**, if the application sets the wait for power up flag, the PMCL **218** then waits until the IP unit is fully powered up before returning from the call. Otherwise, the call returns as soon as the command is acknowledged, with status of 0 for okay, 1 for fast power-up, 2 for slow power-up, or 3+ for error conditions. The powered up state is when the unit is at the desired Vdd for the requested frequency, and not just that the unit is turned on.

In step **518**, the MPM **280** (or IPM) sends the requests to the appropriate targets. In step **520**, the MPM **280** waits for the receipt of the acknowledgements that indicate message received and executed or execution has begun. A NACK or negative acknowledgement may also be returned from the SPM **264** and **274**.

In step **522**, the SPM **264** receives the commands and performs the actions. Steps **524**-**528** are possible actions that the SPM **264** may perform. In step **524**, the SPM **264** switches the Vdd mux. In step **526**, the SPM **264** switches a clock mux. In some embodiments when the voltage goes down, step **526** is performed before step **524**. In step **528**, the SPM **264** changes the Vt on the associated transistors. After the SPM **264** performs the actions, the SPM **264** returns a status message upstream indicating acknowledgement or negative acknowledgement in step **530**. FIG. **5** ends in step **532**.

FIG. **6** depicts an illustration of internal circuitry **600** for an SPU **290** in an exemplary implementation of the invention. In this embodiment, the internal circuitry **600** for the SPU **290** is internal to the integrated circuit **250** of FIG. **2**. The internal circuitry **600** includes an external voltage **610**, a dropout voltage regulator **620**, a dropout voltage regulator **630**, a logic block **640**, and a logic block **650**.

FIG. **7** depicts an illustration of external circuitry **700** for an SPU **290** in an exemplary implementation of the invention. In this embodiment, the external circuitry **700** for the SPU **290** is external to the integrated circuit **250** of FIG. **2**. The internal circuitry **700** includes an external voltage **710**, a power supply pin **720**, a power supply pin **730**, a power supply pin **740**, a logic block **750**, a logic block **760**, and a

logic block **770**. The external circuitry **700** for the SPU **290** provides a DC/DC conversion. The DC/DC conversion provides multiple independent power supply pins **720**, **730**, and **740**. The power supply pins **720**, **730**, and **740** have a variable voltage supply on each separate power pin. Also, in some embodiments, the variable voltage is within a range and in steps. In some embodiments, the PMCL **218** controls the voltage to power supply pins **720**, **730**, and **740**.

FIG. **8** depicts a flowchart from an application request to an SPU action in an exemplary implementation of the invention. FIG. **8** begins in step **800**. In step **802**, an application is invoked. In step **804**, the application determines the required frequency for performance of an IP unit. For example, the application determines a specified frequency in MHz for IP unit for an MPEG decoder.

In step **806**, the application invokes the PMCL **218** API call. One example of this call is "Set_Rate (unit Y, N MHz, degree of dynamic power management (DPM) allowed, DPM threshold, other information to allow DPM trade-offs, starting back bias for SPMs with dynamic bias, wait for power up flag)." In this example, the other information could be "no power off, use high Vt and clocks off instead" and "major waits are about 10 us, with a 400 ns threshold."

The PMCL **218** determines possible trade-offs available for the unit and selects a the lowest possible Vdd that will support the requested frequency in step **808** and determines the SPMs **264** and **274** that will be affected and which power PINs to change in step **810**.

In step **812**, the PMCL **218** sends a command to the MPM **280** to have the SPMs **264** and **274** (and IPM) to prepare for a Vdd change. In step **814**, the PMCL **218** waits for the acknowledgement from the MPM **280**. In step **816**, the PMCL **218** sends a command to the SPU **290** to change the Vdd on the selected power pins and waits for the affected area to "settle down." In step **818**, the PMCL **218** then sends a "resume operation at a specified frequency" command to the MPM **280**. In step **820**, the MPM **280** propagates the resume command to all affected SPMs **264** and **274** (and IPMs). In step **822**, one of the power managers (i.e. MPM **280**, IPM, or SPMs **264** and **274**) sets the specified frequency. In step **824**, the IP unit operation resumes after the clock has settled. FIG. **8** ends in step **826**. In some embodiments, the user application has the option of waiting for the entire operation to finish or to continue and either query the PMCL **218** as to the progress of the operation or wait for a "finished" interrupt from the PMCL **218**.

FIG. **9** depicts a flowchart for saving an IP unit's state prior to powering down and restoring the IP unit's state when powering up in an exemplary implementation of the invention. FIG. **9** begins in step **900**. In step **902**, the user application requests that the PMCL **218** power off an IP unit and wants to save the IP unit's state. In some embodiments, the reconfiguration of the IP unit takes a long time. The request in step **902** may be accompanied by the address of an area to which the state should be saved.

In step **904**, the PMCL **218** sends a "stop clock and read IP unit state" message to the MPM **280**. The MPM **280** then propagates the "stop clock and read IP unit state" message to the SPMs **264** and **274** of the affected unit in step **906**. In step **908**, the MPM **280** uses the scan chain for the IP unit to read the state into a register or buffer for presentation to the PMCL **218**. In step **910**, if the PMCL **218** provided the MPM **280** with the address of the save area, the MPM **280** saves the state information directly in the specified area. In step **912**, after all of the IP units' state has been saved, the PMCL **218** sends a "power off IP unit" message to the MPM **280**. In step **914**, the MPM **280** then propagates out the "power off IP unit" message. In step **916**, the PMCL **218** returns the save state area to the user application. The save state area contains the state of the unit.

At a later time, in step **918**, the user application requests that the PMCL **218** power the IP unit-back up and restore the state of the IP unit. In some embodiments, the user application request includes the address of the area to which the state was saved. In step **920**, the PMCL **218** sends a "power up IP unit with clocks off and restore state" message to the MPM **280**. In step **922**, the MPM **280** propagates the "power up IP unit with clocks off and restore state" message to the SPMs **264** and **274** of the affected IP unit. In step **924**, after the IP unit is powered up, the MPM **280** uses the scan chain to reload the unit's state. In some embodiments, the reloading of the unit's state originates directly from the save area or from information passed to the MPM **280** from the PMCL **218**. In step **926**, the PMCL **218** sends a message to the MPM **280** to turn clock back on and report to user application that the IP unit is ready to continue operations. FIG. **9** ends in step **928**.

In some embodiments, the same functionality of FIG. **9** can be used to implement an internal "logic analyzer" function, in which the IP unit in question would not be powered down after being read. If the associated SPMs **264** and **274** of the IP unit have the ability to single- or multi-step the clock, the local scan testing is performed by having the SPMs **264** and **274** "signal isolate" the IP unit. Then, use of a combination of the ability of single- or multi-step the clock and the ability to use the scan chain can read/write the IP unit's internal state.

FIG. **10** depicts a diagram of a system-on-a-chip (SOC) **1000** and an extended local memory **1004** in an exemplary implementation of the invention. The SOC **1000** is one example of the integrated circuit **250** and communicates with the embedded firmware stack **210** in FIG. **2** as described above. The SOC **1000** includes a CPU **1010**, a local memory **1020**, a memory controller **1030**, a mixed signal circuitry **1040**, an application specific circuitry **1050**, a PCI-X circuitry **1060**, a MPM **1070**, a real-time clock (RTC) **1075**, an Ethernet circuitry **1080**, and a USB circuitry **1090**. The CPU **1010**, the local memory **1020**, the memory controller **1030**, the mixed signal circuitry **1040**, the application specific circuitry **1050**, the PCI-X circuitry **1060**, the Ethernet circuitry **1080**, and the USB circuitry **1090** are all power islands in which power is controlled within the power islands by power managers. In this embodiment, the power islands are delineated by the functionality of a part of the SOC **1000**.

The extended local memory **1004** includes an IPM **1006** that is coupled to the bus **1071**. The CPU **1010** includes an SPM **1015** that is coupled to the bus **1071**. The local memory **1020** includes an SPM **1025** that is also coupled to the bus **1071**. The memory controller **1030** comprises an SPM **1035** that is coupled to the bus **1071**. The mixed signal circuitry **1040** includes an SPM **1045** that is coupled to the bus **1071**. The application specific circuitry **1050** includes an IPM **1055** and an SPM **1058** that are both coupled to the bus **1072**. The PCI-X circuitry **1060** includes an SPM **1065** that is coupled to the bus **1072**. The MPM **1070** is coupled to the bus **1071** and the bus **1072**. The MPM **1070** is one example of the MPM **280** as described above. The Ethernet circuitry **1080** includes an SPM **1085** that is coupled to the bus **1072**. The USB circuitry **1090** includes an SPM **1095** that is coupled to the bus **1072**.

In this embodiment, power command buses comprise the bus **1071** and the bus **1072**. The bus **1071** and **1072** are simple multi-drop serial buses that may cross chip bound-

aries and interconnect power managers. The power command bus may be a combination of serial busses, such as the bus **1071** and the bus **1072**, with one per region of the chip and then multi-drop within the region. In other embodiments, the power command bus includes a parallel bus or a combination of serial and parallel busses. In some embodiments, the power command bus is the system bus. The power command bus may contain messages with at least a unit ID with the associated payload. For a fixed point to point bus, the message does not need a unit ID only the payload.

In some embodiments, the power command bus uses an error detection scheme such as parity, ECC, or a redundant code. In some embodiments, the power command bus is a low performance bus that does not interfere with the integrated circuit design and is not visible to the user. In some embodiments, the communication between the PMCL **218** and the MPM **1070** is memory mapped and based on the main bus such as an AHB for an SOC **1000**.

Some embodiments may include a separate bus for reporting status information between the power managers. In one example, this separate bus provides asynchronous "Alert" type status messages from SPMs to the MPM.

There can be various message formats for the power command bus. In one example for a basic format, the message format includes a start of message indicator, a power manager address, type code, basic command, and an end of message indicator. In one example for an extended format, the message format includes the basic format, an additional length, and additional information. In one example for a response message format, the message format includes a start of message reply indictor, a power manager address, a 3b ACK or NAK or return status (implied ACK), a payload length for return status messages, a payload for return status messages, a reason code for NAK, and an end of message indicator.

In some embodiments, the SPM **1015** or the IPM **1006** times out on replying to a command, and the MPM **1070** reissues the command a programmable number of times. If the SPM **1015** or the IPM **1006** still fails, the MPM **1070** marks the SPM **1015** or the IPM **1006** as unusable and reports back the failure to the PMCL **218**. In one embodiment, the PMCL **218** has the MPM **1070** reinitialize the failing SPM **1015** or the IPM **1006** via the scan system and then retries sending the message. Other conditions such as invalid responses to commands or invalid status reports are also handled by the re-initialization. In some embodiments, the state of the failing SPM **1015** or the IPM **1006** may be read out and saved for later analysis.

FIG. **11** depicts a flowchart for generating a "hot spot" report from an IPM **1055** to the PMCL **218** in an exemplary implementation of the invention. FIG. **11** begins in step **1100**. In step **1102**, the IPM **1055** monitors the temperature statistics of the SPMs. In step **1104**, the IPM **1055** checks whether the mean temperature has exceeded a predetermined and programmed threshold. If the mean temperature has not exceeded the threshold, the IPM **1055** returns to step **1102** to keep monitoring. If the mean temperature has exceeded the threshold, the IPM **1055** then generates a problem ("hot spot") report message in step **1106**. In step **1108**, the IPM **1055** waits for the next status query the MPM **1070**. In some embodiments, a logically separate bus is provided for asynchronous status reports to the MPM **280**.

In step **1110**, the MPM **1070** receives the hot spot report message. In step **1112**, the MPM **1070** either waits for further confirmation (i.e. see that the "hot spot" last pasts a predetermined threshold) or immediately takes action to fix the problem depending on the internal logic of the MPM **1070**. In some embodiments, in step **1114**, the MPM **1070** takes action by posting an interrupt to the PMCL **280** that it needs attention. In other embodiments, if the PMCL **280** queries the MPM **1070** often enough, then the interrupt is not needed. In step **1116**, the MPM **1070** (or IPM) fixes the problem by making a local trade-off, performing the action, or ordering the action to be performed. One example of fixing the problem is lowering the operating frequency of the hot spot area. In step **1118**, the MPM **1070** reports both the problem and the fixing of the problem upstream.

In step **1120**, the PMCL **218** reads the modified hot spot report from the MPM **1070**. In step **1122**, the PMCL **218** determines what action to take to fix the problem or notify the GPAL **214** of the problem. In step **1124**, the PMCL **218** issues the appropriate commands to the MPM **1070** to fix the problem. In this step, the software will make the trade-off required to fix the problem. In some embodiments, if the GPAL **214** determines the high level fix, then the GPAL **214** sends it to the PMCL **280** to be converted into MPM commands. In step **1126**, the PMCL **218** monitors the problem area for a specified time to check if the problem is fixed. FIG. **11** ends in step **1128**.

In some embodiments, the type of functionality in FIG. **11** can be performed at other levels such as the PMCL **218**. In one example, the PMCL **218** queries (via the MPM **1070**) all the SPMs that have the desired measurement ability (and IPMs) as to their local conditions and can then, for example, build a "map" of power usage that it can then act on.

FIG. **12** depicts a diagram of a system-on-a-chip (SOC) **1200** in another exemplary implementation of the invention. The SOC **1200** is attached to a sensor link **1212**, an RF link **1214**, a control link **1216**, a video link **1294**, an audio link **1295**, an interface link **1296**, a control link **1297**, and a power link **1298**. The SOC **1200** includes clock and distribution management **1210**, an IP block power island **1220**, a memory power island **1230**, a microprocessor power island **1240**, an IP block power island **1250**, a distribution power island **1260**, an IP block power island **1270**, an IP block power island **1280**, and power and distribution management **1290**.

The IP block power island **1220** includes a product standard interface IP block including an analog-to-digital converter (ADC) **1222**, which includes an SPM **1224**. The IP block power island **1230** includes a memory **1232**, which includes an SPM **1234**. The microprocessor power island **1240** includes a microprocessor **1242**, which includes an SPM **1244**. The IP block power island **1250** includes a product standard interface IP block including ADC **1252**, which includes an SPM **1254**. The distribution power island **1260** includes a data and signal distribution **1262**, which includes an SPM **1264**. The IP block power island **1270** includes a general purpose IP block including a digital signal processor (DSP) **1272**, which includes an SPM **1274**. The IP block power island **1280** includes a product-specific IP block **1282**, which includes an SPM **1284**. The power and distribution management **1290** includes an MPM **1292**.

FIG. **13** depicts a flowchart for building a chip with power islands in an exemplary implementation of the invention. FIG. **13** begins in step **1300**. In step **1302**, the IPs or library cells are selected, and the custom logic, if any, is specified to be used to build the chip. In some embodiments, the maximum and sub clock rate, % idle time, and minimum and maximum Vdd are specified. In step **1304**, the register transfer level (RTL) is written. In step **1306**, the RTL is simulated and debugged.

Either during or after the writing of the RTL, a software tool may be used to add annotations for the MPM, IPM, and/or SPM blocks in step **1308**. In some embodiments, the desired functionality options are specified in the annotations. In some embodiments, the optional functionality is specified per SPM block. In some embodiments, the RTL is annotated with SPM configuration information on a per-module basis. In some embodiments, the proper annotation is inserted by hand on a per module basis during or after the RTL is written. In other embodiments, a separate table in the proper format is created with the module names and respective annotations. In some embodiments, a separate software tool provides the ability to interactively build the separate table. In some embodiments, the software tool adds the proper annotation to the un-annotated modules in the RTL using information from the table.

In step **1310**, the synthesis is run on a power island basis, where power islands are not mixed. In step **1312**, performance measurement software is run on each module for each Vdd and Vt option, and then the annotations for the MPM are added to the RTL. In some embodiments, the performance of the design is measured at all desired voltages and Vt combinations. The software tool then derives the actual frequency, Vdd, and Vt tables for each SPM and back annotates the MPM (or IPM) RTL of the SPM characteristics.

In step **1314**, the final synthesis is run on a power island basis. In some embodiments, the modules are separately routed or by SPM. In step **1316**, the software tool is run to hook up power and clocks to each SPM. Step **1318** is the rest of the steps to tape-out. In some embodiments, the software tool generates the finished net-list with all information. FIG. **13** ends in step **1320**.

The above-described elements can be comprised of instructions that are stored on storage media. The instructions can be retrieved and executed by a processor. Some examples of instructions are software, program code, and firmware. Some examples of storage media are memory devices, tape, disks, integrated circuits, and servers. The instructions are operational when executed by the processor to direct the processor to operate in accord with the invention. Those skilled in the art are familiar with instructions, processor, and storage media.

The above description is illustrative and not restrictive. Many variations of the invention will become apparent to those of skill in the art upon review of this disclosure. The scope of the invention should, therefore, be determined not with reference to the above description, but instead should be determined with reference to the appended claims along with their full scope of equivalents.

What is claimed is:

1. A method of building an integrated circuit, comprising:

selecting a plurality of functional circuitry units in the integrated circuit, the plurality of functional circuitry units to be arranged in a plurality of power islands;

synthesizing the integrated circuit on a power island basis;

running a performance measurement on each power island of the plurality of power islands of the synthesized integrated circuit; and

running a final synthesis of the synthesized integrated circuit in a form suitable for fabrication of the synthesized integrated circuit.

2. The method of claim **1**, wherein the plurality of functional circuitry units comprise, for at least one power island of the plurality of power islands, an IP block for implementing a circuit function, the IP block including a second power manager block.

3. The method of claim **1**, wherein at least two power islands of the plurality of power islands have a different power supply voltage from one another.

4. The method of claim **1** wherein at least two power islands of the plurality of power islands have a different clock rate from one another.

5. The method of claim **1** wherein the plurality of functional circuitry units differ among the plurality of power islands according to a desired power level for each power island of the plurality of power islands.

6. The method of claim **5**, wherein the plurality of functional circuitry units comprise library cells that differ among the plurality of power islands.

7. The method of claim **6** wherein the plurality of functional circuitry units in the plurality of power islands have different track heights relative to one another.

8. The method of claim **6** wherein one or more power islands of the plurality of power islands are delineated based on geographic factors of the integrated circuit.

9. The method of claim **6** wherein one or more power islands of the plurality of power islands are delineated based on functional circuitry of the integrated circuit.

10. The method of claim **1** wherein one or more power islands of the plurality of power islands comprise power sub-islands.

11. The method of claim **1** wherein at least two power islands of the plurality of power islands comprise different clock domains from one another.

12. The method of claim **1**, further comprising:

after selecting the plurality of functional circuitry units, specifying a register transfer level (RTL) description of the integrated circuit; and

before the synthesizing step, adding, to the RTL description, annotation for a first power manager block and a second power manager block, the second power manager block associated with one power island of the plurality of power islands, and the first power manager block to be configured for managing a power consumption of the integrated circuit based on needs and operation of the integrated circuit;

wherein the step of running a performance measurement is performed at a plurality of power supply voltage levels and transistor threshold voltages to derive one or more tables of frequency, power supply voltage, and threshold voltage;

and further comprising:

before running the final synthesis, adding, to the RTL description, annotation for the first power manger block according to the one or more tables derived in the running of a performance measurement.

13. The method of claim **1**, wherein the final synthesis produces a tape out for production of photomasks for the integrated circuit.

14. The method of claim **1**, wherein the final synthesis produces a net list of the integrated circuit.

* * * * *