ELSEVIER

DECLARATION OF MICHAEL MAGOULIAS

I, Michael Magoulias, am over twenty-one (21) years of age. I have never been convicted of a felony, and I am fully competent to make this declaration. I declare the following to be true to the best of my knowledge, information and belief:

1. I am Director of Operations and Product Fulfilment, SSRN for Elsevier, Inc. ("Elsevier").

2. Elsevier is a neutral third party in this dispute.

3. I am not being compensated for this declaration.

4. Among my responsibilities as Director of Operations and Product Fulfilment, SSRN I act as a custodian of certain records for Elsevier.

5. I make this declaration based on my personal knowledge and information contained in the business records of Elsevier.

6. SSRN is an open access research platform used to share early-stage research, evolve ideas, measure results, and connect scholars around the world. SSRN is used by academic and corporate research authors to reach viewers and subscribers around the world.

7. SSRN is a searchable online library that enables authors to post their papers and abstracts free of charge.

8. It is the regular practice of Elsevier to publish articles and other writings and make them available to the public through SSRN. Elsevier maintains copies of publications in the ordinary course of its regularly conducted activities.

9. The article below has been attached as Exhibit A to this declaration:

   "Progress Update on the Allam Cycle: Commercialization of NET Power and the NET Power Demonstration Facility," by Scott Martin et al

10. I obtained a copy of Exhibit A through SSRN, where it is maintained in the ordinary course of Elsevier's business. Exhibit A is a true and correct copy of the Exhibit, as it existed on or about November 11, 2024.

11. The article and abstract from SSRN shows the date of publication for the first online version. SSRN populates this information using persistent publication metadata that is

ELSEVIER

embedded in the articles metadata. Once this publication metadata has been first calculated it is not changed.

12. "Progress Update on the Allam Cycle: Commercialization of NET Power and the NET Power Demonstration Facility," by Scott Martin et al was posted online on SSRN on April 11, 2019, and was available for public download at SSRN on April 11, 2019.

13. I hereby declare that all statements made herein of my own knowledge are true and that all statements made on information and belief are believed to be true, and further that these statements were made with the knowledge that willful false statements and the like are punishable by fine or imprisonment, or both, under 18 U.S.C. § 1001.

I declare under penalty of perjury that the foregoing statements are true and correct.

Date

_____November 20, 2024_____

Signature

EXHIBIT A

To Declaration of Michael Magoulias

14th International Conference on Greenhouse Gas Control Technologies, GHGT-14

21st -25th October 2018, Melbourne, Australia

Progress Update on the Allam Cycle: Commercialization of NET Power and the NET Power Demonstration Facility

Scott Martin*, Brock Forrest, Navid Rafati, Xijia Lu, Jeremy Fetvedt, Mike McGroddy, Bill Brown, Rodney Allam, Damian Beauchamp, David Freed◊

8 Rivers, 406 Blackwell Street, Crowe Building 4th Floor, Durham NC 27701 USA

Abstract

The Allam Cycle is a highly-recuperated, oxy-fuel, semi-closed supercritical CO_2 Brayton cycle that offers significant advantages over traditional power cycles, including high efficiencies, low capital costs, low or no water consumption, and elimination of all air emissions, including CO_2. The natural gas cycle, under commercialization by NET Power, was first presented at GHGT-11 as a novel cycle under development. Progress on the overall cycle design and on the design and construction of a 50 MWth demonstration plant was presented and published at GHGT-13. This paper will present the final constructed design of the demonstration plant, as well as an update on the commissioning, start-up and operation of the facility, underway as of January 2018. It will provide further updates on the commercial design of a NET Power facility. Tangentially, 8 Rivers has pursued work inspired by the aspirations of the Allam Cycle – creating new cycle designs, new CO_2 uses, concepts in clean sour gas combustion, and the clean production of chemical and industrial commodities such as hydrogen and urea.

Keywords: Supercritical, carbon, CCS, Carbon dioxide, demonstration, natural gas, coal, fuel, clean, capture, sequestration, supercritical, CO_2, Power, Energy, hydrogen, NET Power, McDermott, Exelon, 8 Rivers, Toshiba

1. Introduction

In 2008, inspired by the opportunities pouring forth from the American Recovery and Reinvestment Act in the United States, a team at 8 Rivers set out to develop an idea for a new type of clean coal project, setting aspirational goals for a cycle that could create cheap and clean carbon-based energy for the world. The team was discouraged by existing concepts for emissions capture, which largely focused on correcting known processes through technologies such as post combustion carbon capture – processes that both significantly downgraded performance and increased capital cost. While this was and remains today the typical approach to emissions capture, ballooning costs create more and more difficult returns on investment. In most cases, these modified plants are infeasible without heavy subsidization or a cost of CO_2 well above the current market price. The team wanted to find a solution that could stand up on its own.

* Corresponding author. Tel.: +1-919-667-1800
E-mail address: scott.martin@8rivers.com
◊ Independent

While the team believed they could capture emissions for no extra cost, doing so required pursuing a completely new design paradigm. The cycle that evolved was the Allam Cycle, named after its lead inventor, Rodney Allam. While the original design proposed using gasified coal syngas as the principal fuel source, it was determined that a concept for natural gas would provide a more feasible short term path to commercialization, and natural gas was emerging as the dominant fuel on the global power generation scene. NET Power was stood up as the commercial entity that would bring the natural gas Allam Cycle technology to market. Commercial interest followed suit. In 2011, Toshiba joined as technology partner to design and build the first-of-a-kind supercritical CO_2 turbine specific to the cycle. In 2012, NET Power saw its first major investment of $50 million from McDermott International (formerly CB&I; formerly The Shaw Group). The investment provided the funding necessary to begin developing a demonstration NET Power facility. Then, in 2014, Exelon Corporation joined the company, providing a $90 million investment and further in-kind support to ensure the technology could be brought through demonstration scale. Now, four years later, the demonstration plant has completed its first operational phase to prove out the new Toshiba combustor and integrated operation and controllability of the cycle. The next stage of testing, set to begin in Q4 of 2018, will test the cycle in its entirety.

The Allam Cycle was developed with the aim of producing power at a cost competitive with existing best-in-class, non-carbon capture power generation technologies while inherently capturing all carbon and non-carbon emissions for no additional cost. Based on the advancement of NET Power and the Allam Cycle to date, 8 Rivers has applied the same innovation approach to adjacent and related markets, generating several new innovative clean energy processes. Work on novel CO_2 uses, fuel clean-up, combustion, and hydrogen production technologies has taken place, with an overview of that work provided in this paper.

2. Overview of the Allam Cycle

The Allam Cycle is a highly-recuperated, oxy-fuel, semi-closed supercritical CO_2 Brayton cycle that offers significant advantages over traditional power cycles, including high efficiencies, low capital costs, low or no water consumption, and the near elimination of all air emissions while capturing near all generated CO_2. The natural gas cycle, under commercialization by NET Power, was first presented at GHGT-11 as a novel cycle under development [1]. Progress on the overall cycle design and the design and construction of a 50 MWth demonstration plant was presented and published at GHGT-13 [2]. This paper will present the final construction of the demonstration plant, as well as an update on the commissioning, start-up and operation of the facility that is underway as of January 2018.

Traditional power cycles, such as natural gas combined cycle, supercritical coal cycle, and integrated gasification combined cycle, require the addition of expensive, efficiency-reducing equipment in order to decrease and capture emissions of carbon dioxide and other pollutants. The Allam Cycle takes a novel approach to reducing emissions from fossil fuel power generation through the use of an oxy-combustion cycle that employs high-pressure supercritical CO_2 as a working fluid in a highly recuperated manner. In this configuration, the cycle is able to reach high performance efficiencies—currently 58.9% net LHV efficiency for natural gas—and the only by-products are liquid water and a stream of nominally pure CO_2 that is already at pipeline pressure as a result of the operating conditions of the cycle. The inherent operational characteristics of the Allam Cycle allows it to avoid the necessity of additional capture, clean-up, and compression systems for CO_2 carbon capture and storage (CCS) or carbon capture utilization and storage (CCUS). The cycle is able to utilize a variety of hydrocarbon fuels, including natural gas, unprocessed raw and sour gas, and gasified solid fuels such as coal or biomass [3]. The result is a power cycle with major advantages over conventional systems that do not capture CO_2.

The 50 MWth NET Power demonstration facility functions to validate both the cycle as a whole as well as the new supercritical carbon dioxide powered turbine and oxy-fuel combustor designed and manufactured by Toshiba [4]. The first stage of testing at the demonstration facility utilized the overall process in addition to a specially designed combustor test stand to accommodate the testing of a standalone Toshiba oxy-fuel combustor in a recirculating fashion akin to the final design and operation of the overall cycle. The next stage, now in progress, utilizes the full cycle design to accommodate integrated hot operation of both the combustor and turbine for full process demonstration.

In addition to the demonstration plant, NET Power has completed a comprehensive pre-FEED (Front End Engineering Design) of the full commercial design which has provided preliminary information on the expected economics of a commercially deployed full scale 300 MWe NET Power natural gas plant.

3. Progress of the Demonstration Natural-Gas-Based Facility

3.1. Combustor Test Rig (CTR) Operations

The NET Power (NP) Demonstration facility began testing in Q2 of 2018. The focus was to test the novel 50 MWth Toshiba combustor in the NET Power recirculating cycle at steady state and transient conditions while receiving dynamic feedback from the cycle's recuperation. The combustor was tested using a special plant layout known as the Combustor Test Rig (CTR), designed by NET Power, 8 Rivers and WSP, and a special combustor test stand designed by Toshiba.

Activities involved operation of the entire balance of plant (BOP), enabling integrated cycle equipment and control system operability to be validated and tuned. Operators fed fuel, oxidant, and recirculating carbon dioxide to the combustor in the semi-closed process. As a substitute for the hot gas path of the turbine, a pressure and temperature release device was employed. By doing so, the plant mimicked the turbine's pressure and temperature letdown due to expansion work, allowing the cycle and combustor to operate in a semi-closed fashion per the cycle design, while isolating the turbine from the combustor during testing.

In order to drive the Main CO_2 Compressor mechanically coupled to the turbine, a VFD motorized the Toshiba turbine via its generator. Toshiba commissioned and NET Power operated the turbine at fully rated speed with a specialized air coolant supply to counter turbine windage losses during combustor testing. In this way, the hot gas path was isolated from the cycle while process flow was directed through the rest of the plant.

Key Dates:

- May 2018 – First-fire (steady flame) in the Toshiba combustor and subsequent operation of the demonstration plant was achieved May 2018 and announced publicly.
- August 2018 – Combustor testing concluded in early August and it was determined the plant was ready to move on to the next phase of testing.
    - *Note*: the tested combustor is the same as the commercial plant production unit, where 10 – 12 units will operate in parallel.

The operation of the combustor was considered an important risk which was successfully addressed in testing. Furthermore, during test operation the overall plant was controlled continuously through startup, shutdown, and excursions at key operational points, thus serving as further proof of concept. Major equipment underwent 500-900 hours of operation, including 170 hours of runtime with both fuel and oxygen supplied to the cycle. During testing, the maximum coincident pressure and temperature that the main recuperator train experienced was 110 bar (1595 psi) and 538°C (1000°F) respectively.

More importantly, operation of the hot recuperator permitted the demonstration facility to gain critical experience with hot operations. In-situ testing of the working fluid's chemistry was also performed on a multi-second basis monitoring seven key species that can largely impact various turbomachinery performance profiles. While data validation remains ongoing, cycle performance has matched the performance of process simulations predicted by computer modeling, thereby signaling readiness to move on to the next stage of testing.

3.2. Fully Integrated Plant Operations

Since the balance of plant was kept intact for the Combustor Test Rig, major adjustments were only necessary to the area of the plant near the Toshiba combustion turbine. This includes:

- Installation of the high temperature recuperator for operation up to 700°C (1292°F)
- Inspection and refurbishment of the Toshiba combustor and installation at the Toshiba turbine
- High energy piping welds and low energy piping welds for fit-up to turbine and main high temperature recuperator
- I&C changes for high energy piping and turbine (to match the demonstration configuration) as well as software modifications to the plant control systems
- Other plant turnover and refurbishment items and implementation of lessons learned.

Full startup of the plant is expected in Q4 of 2018. Following cold flow, ignition, and low load testing, the plant will be ramped to the synchronization point where energy will be exported to the grid. An overhead view of the demonstration facility is shown in Figure 1.

3.3. Turbine and Plant Performance Run

Following achievement of synchronization, the plant will be loaded to the operational points required for turbine and plant performance testing. This process will entail a semi-continuous run time whereby load following and full load operation will be tested, as the plant will be directly bidding into the local power market. At the conclusion of the turbine and plant performance testing, the plant will be unloaded for planned inspections.

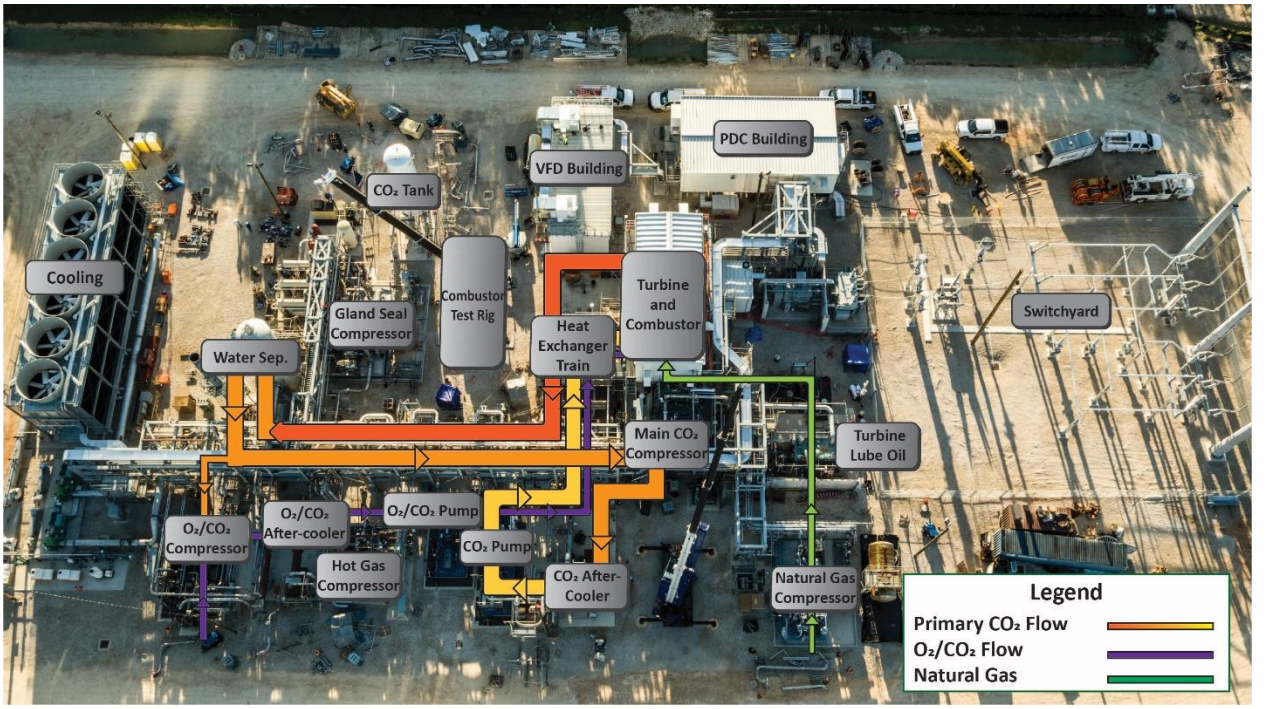

Figure 1: Overhead view of the demonstration facility and key process streams

3.4. Extended Run Operation

Following the performance run, an extended operational period is planned to address the integrity of the plant and its components, as well as early metrics on changes in performance over time and season.

4. Progress of the Commercial Natural-Gas-Based Facility

In 2016, NET Power commissioned CB&I (now McDermott) and partner 8 Rivers to develop a Pre-FEED (Front End Engineering Design) for the first-of-a-kind NET Power Commercial Plant design. The Pre-FEED Phase I was completed in January 2017, culminating in a preliminary design and a design review of in-process work products. Further optimization work was performed in a second iteration of the design (Pre-FEED Phase II) with the main objective of further reducing the capital cost especially for the piping used in high temperature service and its associated labor services. In addition, a design and performance profile specific to a United States customer base was developed and optimized at this stage. The Pre-FEED Phase II scope included the development of early engineering design deliverables such as P&IDs and a plant layout, a Level 2 project schedule, and a Class 4 AACE cost estimate for a nominal 300 MWe NET Power commercial plant. This work was completed in September 2017, and included the detailing of all high energy systems critical to the success of an Allam Cycle-based power plant. Furthermore, it sought to develop a portfolio of operational conditions and characteristics that would entail the co-production of various industrial gases as well as load following profiles for integration with dynamic grids. Ongoing work seeks to address a global customer base with focus points on further compacting the plant footprint, integrating modularization, substituting metallurgy with larger supply chain options, and tailoring plant control to collaborate with renewables powered grid operations.

Figure 2: NET Power nominal 300MWe Commercial Plant Concept

Table 1: First-of-a-kind (FOAK) Commercial Plant Performance

FOAK Commercial Plant Performance	USA* (%)	World (%)
Thermal Heat Input	100%	100%
Turbine Shaft Power	-17.9%	-16.7%
Shaft-mounted CO_2 compressor and generator	-8%	-7.5%
ASU auxiliary load	-12%	-11.2%
BOP parasitic (pumps, cooling, tower, etc.)	-7%	-6.5%
Net Plant Efficiency (% on LHV)	55.1%	58.9%
Net Plant Heat Rate (LHV)	6,193	5,793

Table 2: Potential Industrial gas cogeneration from a NET Power commercial facility

Industrial Gas Outputs	Approximate Tons/yr
High-pressure, high-purity CO_2	890,000
High-purity N2, 99.9%	1,500,000
Low-purity N2, 98.6%	2,600,000
High-purity Ar, 99.99%	63,000
High-purity O2, 99.5%	45,000

The Commercial Plant Pre-FEED Phase II was built upon the NET Power natural gas fired supercritical CO_2 oxy-fueled power cycle scope, technology, and the project design experience obtained via NET Power's demonstration facility in La Porte, TX. The study assumed a generic site, located near the U.S. Gulf Coast region. An indicative cost for the commercial plant was generated. The commercial development team has continued to optimize the design development to reduce commercial plant capital cost and program risks. The timing and schedule for finalization of this optimization is targeted to be in sync with the result of a commercial plant COD in 2021.

The base commercial plant design uses natural gas as fuel and oxygen from an on-site air separation unit (ASU) to reliably produce electricity and carbon dioxide (CO_2) for local pipeline export to downstream consumers such as enhanced oil recovery (EOR) operations. Under normal operation, the plant does not emit CO_2 into the atmosphere or any other emissions.

The CO_2 recuperative heat exchangers and the combustion turbine generator (CTG) are the key pieces of equipment for the plant. Toshiba is currently developing the design of the commercial scale CTG utilizing lessons learned from the 50 MWth Demonstration Plant. The design of the recuperative heat exchanger train optimizes heat recovery for the required extreme temperature and pressure conditions demonstrating existing technology but in a first-of-a-kind regime of coincident pressure and temperature.

5. CO_2 Uses – A Review of Emerging Opportunities

The market potential for CO_2 products is coming into focus. The Global CO_2 Initiative and CO_2 Sciences have estimated that by 2030, CO_2 products could generate between $800 billion and $1.2 trillion annually and reduce CO_2 emissions by 10% to 15% [5].

There is increased interest in finding non-injection based uses for CO_2, which is exemplified by the $20 million NRG/COSIA Carbon X-Prize that is aimed at scaling CO_2 utilization applications and is currently underway. Existing uses for CO_2, which have been in commercial practice for decades, include the production of urea, methanol, carbonate salts, polycarbonates, and other specialty chemicals (including carbon nanotubes).

Recently, methods for curing cement/concrete have deployed commercially. Companies deploying these technologies include Solidia, CarbonCure, Carbcrete, and Carbon Upcycling. There are also other technologies in development for converting ethane to ethylene using CO_2 as a soft oxidant.

Conversion of CO_2 to specialty chemicals is attractive due to the high-margins, but the total CO_2 consumed is low relative to EOR. These high-margins provide a near-term financial justification/incentive for the build out of the required CO_2 transportation infrastructure. On the other hand the volume of CO_2 consumed for processes like fuel production and aggregates (e.g. cement) offset higher margins with larger volumes. It is predicted that high volume applications will become market drivers. Indeed, a recently released study predicted that the markets for concrete and aggregates ($165B - $550B) and fuels ($10B - $250B) would likely dwarf that of chemicals ($1B - $12B) by 2050. This may speak to more insight and/or optimism into those subsectors by respondents who have some stake in it [5].

Use of CO_2 as the feedstock for plastics and polymers productions processes is another attractive application. One example is US-based Novomer, a company that converts CO_2 to polycarbonates/polyols, which initially received investment from Saudi Aramco. Additionally, German polymer company, Covestro, is already using CO_2 in the production of foams used in mattresses and upholstered furniture and is planning to expand its production lines of CO_2-feedstock-based polyols. Perhaps the most interesting application lies in “new materials,” including the likes of carbon fiber, carbon nanotubes, and carbon-based nanoparticles.

Nevertheless, an even larger opportunity may exist to support further CCUS and associated innovation. 8 Rivers is exploring a whole host of applications where cryogenic CO_2 separation can be exploited to create more cost effective energy resources, with CO_2 provided by a NET Power facility or other source of captured high pressure carbon dioxide.

6. The Many Uses of Cryogenic CO_2 Enables a New Energy Portfolio

6.1. TarT Process for Natural Gas Sweetening

A significant portion of natural gas reserves around the world contain large quantities of sulfur species and carbon dioxide, which are often referred to as sour gas reservoirs. The IEA reports that more than 40% of the world’s gas reserves outside of North America are sour, with the number increasing to 60% for Middle Eastern gas reserves [6] [7]. Sulfur species, such as hydrogen sulfide (H_2S), are highly corrosive when mixed with water and toxic to biological organisms. In addition, the CO_2 has a negative effect on energy content of natural gas and increases the greenhouse gas emissions upon the usage of such natural gas source. In order to meet pipeline quality standards, natural gas is usually required to contain no more than 2% CO_2 and 4 ppm_v H_2S on a volume basis. The process of removing acid gases from the natural gas, also called gas sweetening, is traditionally carried out using commercial solvents such as MEA, MDEA and Selexol based on their composition and the amount of acid gases to be removed. Putting the environmental impact of such solvents aside, high concentrations of acid gases (e.g. >20% H_2S+CO_2) tend to increase the capital and operating costs of natural gas sweetening processes, which would make the economic utilization of such acid gas reserves difficult.

Cryogenic separation of acid gases from natural gas can be a cost effective alternative to conventional acid gas removal processes, especially in the presence of large quantities of acid gases. 8 Rivers' TarT™ liquid CO_2 scrubbing process is a new technology that exploits cryogenic separation and thermo-physical properties of liquid CO_2 for natural gas sweetening. A simplified block flow diagram of the TarT process for natural gas sweetening is shown in Figure 3.

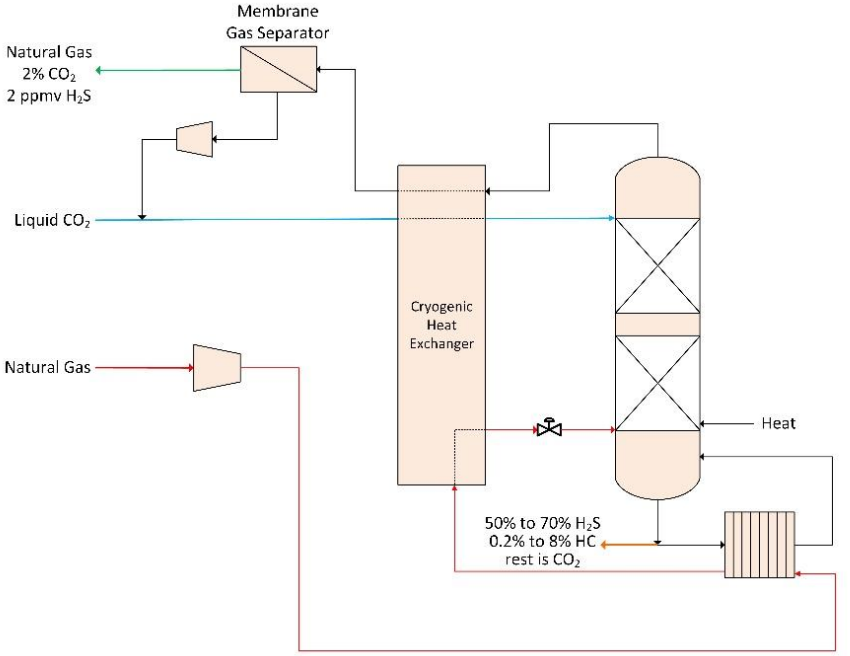

Figure 3. Block flow diagram of TarT process for sweetening of sour gas

The TarT process relies on the use of liquid CO_2 as a solvent to efficiently scrub the H_2S out of sour gas. A simple packed distillation column with rectifying and stripping zones is at the heart of the TarT process. Liquid CO_2 and sour gas are cooled to a temperature near CO_2 triple point (-56.6 °C) and then are introduced into the top and bottom sections of the column, respectively. Operation of the column above the triple point of CO_2 avoids solidification of CO_2 within the column and connecting pipes at any operational conditions and thus the need for an advanced and complex column design such as that used in the Controlled Free Zone ® (CFZ ®) process. The bottom liquid product from the distillation column contains nearly all H_2S within the sour gas feed as well as some CO_2 and hydrocarbons. The removal rate of H_2S from the column can be tuned by controlling the flow rate of fresh makeup CO_2 fed into the column. Clean natural gas leaving the top of the column is processed in a membrane separation unit to achieve desired CO_2 content in the final clean gas product, and the CO_2 on the permeate side of the membrane will be compressed and recycled back to the system. Meeting the pipeline requirements for CO_2 content (<2% volume) can be achieved using a single stage commercial membrane systems for CO_2 removal. The sour residue collected at the bottom of column is in liquid phase, which facilitates its pumping for reinjection operations. Alternatively, it can be readily used as a feedstock in Claus process for sulfur production.

Table 3. Overall performance of the TarT process for sweetening of two highly sour natural gas compositions.

Sour gas composition	72% CH_4, 18% H_2S, 10% CO_2	72% CH_4, 10% H_2S, 18% CO_2
CH_4 content within sour feed (kmol/hr)	5760	5760
Total parasitic load (MW)	17.88	19.56
Makeup CO_2 (tonne/day)	210.14	256.5
Specific parasitic load (kWh/kmol-H_2S removed)	12.42	24.45
Specific parasitic load (kWh/kmol-H_2S + CO_2 removed)	8.40	9.20
Heat/steam input (MW)	0	0
CH_4 lost in the bottom product (% of total CH_4 input)	4.0	4.0
Clean gas composition (% CO_2, ppmv H_2S)	2, 2	2, 2

Table 3 shows the overall mass and energy balance of the TarT process for sweetening of two highly sour natural gas feedstock. Once integrated with a process that relies on natural gas feedstock and equipped with CO_2 capture, the TarT process can utilize by-product CO_2 to generate low-cost pipeline quality gas that can substantially improve the economics of the downstream process.

6.2. Solid Fuel Allam Cycle

In addition to burning natural gas, the Allam Cycle can be applied to coal syngas power generation by integrating with a commercially proven coal gasification system, where it is projected to make major efficiency gains and capital cost reductions over conventional coal systems while still realize full carbon capture [3] [8]. To address the specific challenges for the coal-based Allam cycle, including gasifier selection and integration, materials corrosion, syngas impurities removal, and design of a high-pressure oxy-fired syngas combustor, 8 Rivers has worked with the Energy & Environmental Research Center (EERC) and the North Dakota Industrial Commission (NDIC) Lignite Energy Council (LEC) on a lignite-based Allam Cycle technology development program in support of an industry team comprising ALLETE, Inc., and Basin Electric Power Cooperative (BEPC). In parallel, 8 Rivers has developed a proprietary fuel flexible sCO_2 combustor for the coal syngas Allam Cycle [9]. Current highlights of coal the Allam Cycle research program include the following activities:

- A detailed gasifier selection study was completed to investigate suitable gasifiers for the Allam Cycle. The results show that both entrained flow gasifiers and fluidized bed gasifiers provide good economics across a wide range of fuel types. A detailed feasibility study showed that the Allam Cycle coal system provides significant cost of electricity advantage compared to IGCC/SCPC.

- The initial design of a fuel flexible combustor and test rig were completed. A CFD simulation was conducted to validate the feasibility of multi-fuel operation. The CFD results show that the combustor can achieve designed combustor exit temperature and pressure, as well as a complete fuel burnout [10].

- Two 1500 hour dynamic corrosion tests under 30 bar (435 psi) / 750°C (1382°F) and 269 bar (3902 psi) / 750°C (1382°F) were completed. The test gas at 30 bar (435 psi) / 750°C (1382°F) was simulated to represent a typical combustion flue gas in the coal based Allam Cycle with amine-based pre-combustion

sulfur removal. Test gas at 269 bar (3902 psi) / 750°C (1382°F) represented the oxidant stream in the coal based Allam Cycle. The corrosion mechanisms and rates from the tests did not present any barriers to uses of any high nickel alloys under consideration in the coal based Allam Cycle.

- A patented post-combustion sulfur removal concept was tested and demonstrated with the sulfur removal rate of over 99% [11].

Additionally, 8 Rivers has begun to evaluate a modified version of the TarT natural gas scrubbing process for use with syngas. Initial results are promising and show that cryogenically washing H_2S containing syngas with CO_2 derived from the Allam Cycle may serve as a low-cost alternative to conventional pre-combustion sulfur removal systems often used in gasification trains. Furthermore, the liquid scrubber effluent of CO_2 and H_2S is capable of further processing via conventional Claus plant tail gas cleanup systems to produce pipeline quality CO_2 and elementary sulfur.

6.3. TarT Process for Sour Gas Combustion

8 Rivers developed a novel method which enables sour natural gas as well as the liquid effluent from the TarT process for natural gas sweetening to be directly burned for power generation without any pretreatment. This method can potentially reduce the cost of power production using sour gas feedstock products by eliminating the natural gas pretreatment steps. Oxidized sulfur compounds are captured by limestone in the combustion process to eliminate downstream sulfur corrosion. The desulfurized flue gas then goes through a solids removal process before entering a gas turbine or a turbine expander for power generation. A steam cycle is used for waste heat recuperation from both the turbine exhaust stream and the solids stream to improve the cycle performance. Both air-combustion (see Figure 4) and oxy-combustion configurations (see Figure 5) were investigated and modeled using Aspen Plus.

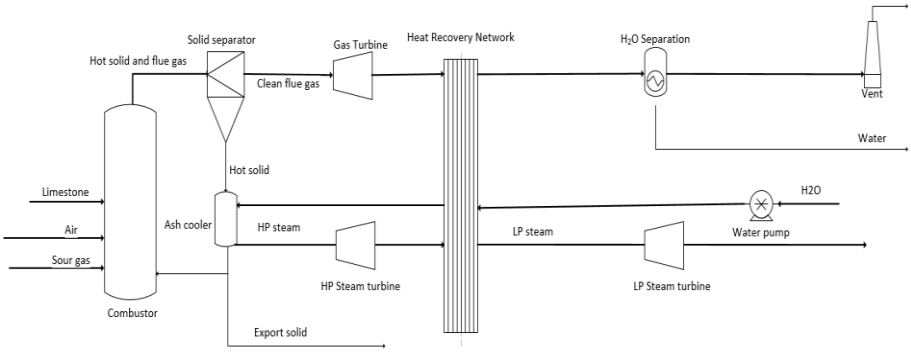

Figure 4. Flow diagram of air-combustion sour gas cycle

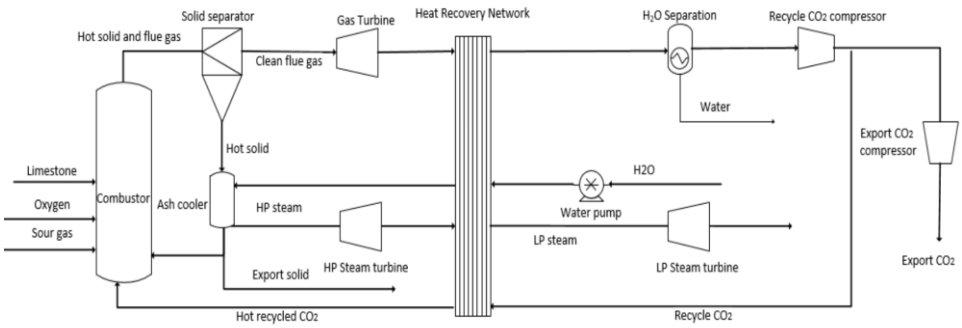

Figure 5. Flow diagram of oxy-combustion sour gas cycle with carbon capture

The design conditions of each cycle are within the operating envelope of commercially available equipment, including compressors, turbines and heat exchangers, enabling near-term deployment of the proposed system. The result of process modeling using ASPEN Plus shows that overall thermal efficiency in a 40-50% range (LHV basis) are achievable using this approach. Without pretreatment, the heating value of sulfur in the sour gas and the heat released from the limestone scrubbing process can be fully utilized for power generation, thus improving the cycle performance. Lu, et al. have completed a detailed techno-economic analysis of the sour gas combustion system. The economic analysis estimates that a baseline air-combustion sour gas system is 41% cheaper than NGCC in 2011, and about 28% cheaper than advanced NGCC in 2022 on a simplified Levelized Cost of Electricity (LCOE) basis. The LCOE of the oxy-combustion sour gas system is estimated to be 53% lower than advanced NGCC in 2022 when the revenue from CO_2 and Argon sales are taken into account. The Capex estimation of the sour gas combustion system is based on the cost of a commercial scale Pressurized Fluidized bed Combustion (PBFC) coal system in 2018 U.S. dollars. This is a conservative approach since the capital costs associated with coal grinding/handling, ash treatment/disposal, and other coal related processes are eliminated in the sour gas power system. Therefore, the novel untreated sour gas combustion system presented suggests that the petroleum and power industries have an opportunity to use sour gas for power generation efficiently, cost effectively and potentially with full carbon capture [12].

6.4. Carbon Free Hydrogen

Large scale hydrogen generation is traditionally carried out using steam-methane reforming process as shown in Figure 6.

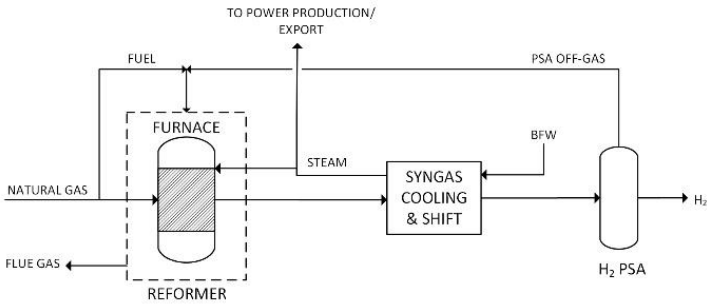

Figure 6: simplified block flow diagram of steam methane reforming process

The SMR process has a relatively high CO_2 footprint of around of 916 kg-CO_2/kNm^3-H_2 [13]. The most effective method to substantially reduce the carbon footprint of such a process is to capture CO_2 from the reformer flue gas using conventional systems. The flue gas from reformer furnace is at near atmospheric pressure, which will require a large absorption tower and other associated equipment. In addition, the recovery of solvent requires a relatively large amount of heat in the form of heat that significantly reduces overall hydrogen generation efficiency. A recent study suggests that using a solvent-based CO_2 capture unit to achieve an overall CO_2 capture rate of 90% in an SMR process would increase the levelized cost of hydrogen by about 45%.

An alternative method of hydrogen generation is the use of a two-stage high pressure syngas generation system utilizing a combination of partial oxidation and steam methane reforming reactors. In such a scheme, the former is utilized to generate heat (and syngas of lower quality) while the latter is to generate high quality syngas using the heat generated in the partial oxidation step. In this way, all CO_2 generated due to the reforming reactions is contained within the high pressure syngas loop which makes the downstream separation of CO_2 more facile. A simplified block flow diagram of a hydrogen generation process using the alternative method, which is referred to as 8RH2 is shown in Figure 7.

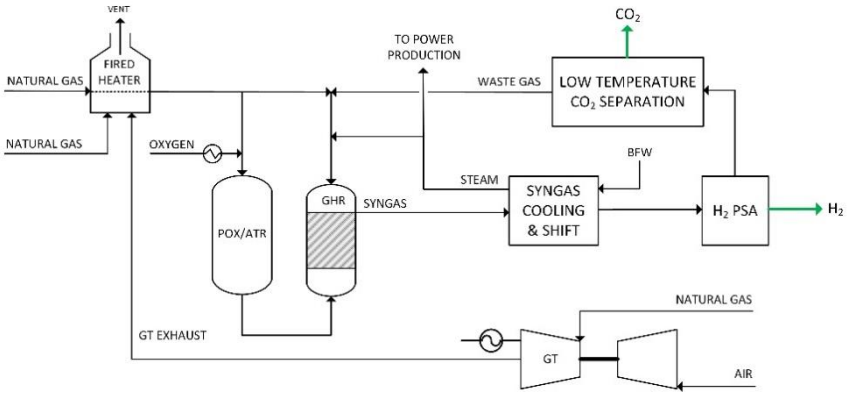

Figure 7: Simplified block flow diagram of 8RH2 process for hydrogen generation with carbon capture

In the combined reforming concept, natural gas is partially oxidized in an oxygen deficient environment. In catalytic variation of partial oxidation, also known as auto-thermal reforming (ATR), the product gas from the partial oxidation section of the reactor is passed through a catalyst bed to enhance syngas generation reactions. The product gas from the first step, is directed to a heat exchanger reformer, also called gas heated reformer (GHR), which is essentially a conventional reformer without the burner and furnace section. The hot product gas at 1050-1400 C (depending on the type of partial oxidation reactor used) drives the steam methane reforming reactions within the GHR tubes, and eventually both syngas streams combines to form the main syngas stream at 550-600 C. After syngas shifting and cooling steps and hydrogen separation, the PSA waste gas contains about 76% CO_2 (mole basis) which is suitable for processing in a low temperature removal system. Such a system uses the auto-refrigeration principle to cool down the process stream near CO_2 triple point, and separates and purifies CO_2 product in a distillation column. 8 Rivers' proprietary low temperature CO_2 removal system captures CO_2 at 150 bar and 99%+ (mole basis) purity by only using electrical energy at 200-220 kWh/tonne-CO_2. The residual gas from CO_2 separation system can be recycled back to the reforming rectors to maximize the process efficiency and CO_2 capture.

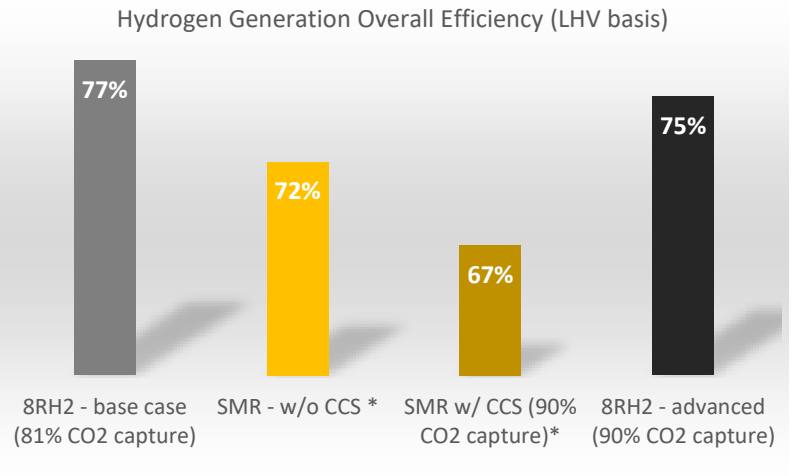

Figure 8. Comparison of overall thermodynamic efficiency of the 8RH2 process and a conventional steam methane reforming process with and without carbon capture.

**SMR process figures were taken from* [13]. *SMR with CCS removes CO_2 from SMR furnace flue gas using Shell Cansolv process.*

Due to the use high purity oxygen and relatively higher electricity consumption in the combined reforming method, additional electricity will be required that can be drawn from the grid or provided using on-site gas turbine. The latter would allow more efficient heat integration within the process at the expense of CO_2 emission due to firing in the gas turbine. In this process as depicted in Figure 7, about 81% of process overall CO_2 is captured. Up to 100% CO_2 captured can be achieved by partially or completely replacing the gas turbine fuel with a portion of hydrogen product from the process. A comparison of the overall thermodynamic efficiency of 8RH2 and a conventional steam methane reforming process is shown in Figure 8.

7. Conclusions

Progress at NET Power continues to move forward. The NET Power demonstration facility is nearing full proof-of-concept following successful testing of the combustor. In tandem, the commercial design of a NET Power facility continues to be progressed. The Allam Cycle, developed with the aim of producing power at a cost competitive with existing best-in-class, non-carbon capture power generation technologies while capturing all emissions for no additional cost is inspiring work in other areas. 8 Rivers has applied the same approach to adjacent and related markets, generating new innovative clean energy processes. Work on novel CO_2 uses, fuel clean-up, combustion, and hydrogen production technologies has taken place, with an overview of that work provided in this paper.

8. Acknowledgements

We would like to thank our team members at 8 Rivers who have supported this work, as well as our partners Exelon Corporation and McDermott International and our technology developer Toshiba Corporation for their tireless contributions.

References

[1] R. J. Allam, M. R. Palmer, G. W. Brown, J. Fetvedt, D. Freed, H. Nomoto, M. Itoh, N. Okita and C. Jones, "High Efficiency and Low Cost of Electricity Generation from Fossil Fuels While Eliminating Atmospheric Emissions, Including Carbon Dioxide," *Energy Procedia,* vol. 37, pp. 1135-1149, 2013.

[2] R. Allam, S. Martin, B. Forrest, J. Fetvedt, X. Lu, D. Freed, G. W. Brown, T. Sasaki, M. Itoh and J. Manning, "Demonstration of the Allam Cycle: An Update on the Development Status of a High Efficiency Supercritical Carbon Dioxide Power Process Employing Full Carbon Capture," *Energy Procedia,* vol. 114, pp. 5948-5966, 2017.

[3] X. Lu, B. Forrest, S. Martin, J. Fetvedt, M. McGroddy and D. Freed, *Integration and Optimization of Coal Gasification Systems with a Near-Zero Emissions Supercritical Carbon Dioxide Power Cycle,* 2016.

[4] T. Sasaki, M. Itoh, H. Maeda, J. Tominaga, D. Saito and Y. Niizeki, *Development of Turbine and Combustor for a Semi-Closed Recuperated Brayton Cycle of Supercritical Carbon Dioxide,* 2017.

[5] C. S. Initiative and C. The Global, *Global Roadmap for Implementing CO2 Utilization,* 2016.

[6] International Energy Agency, "Natural Gas Resources and Production Prospects," in *World Energy Outlook,* Paris, Organisation for Economic Co-operation and Development, 2008, p. 283.

[7] W. F. J. Burgers, P. S. Northrop, H. S. Kheshgi and J. A. Valencia, "Worldwide development potential for sour gas," *Energy Procedia,* vol. 4, pp. 2178-2184, 11 2011.

[8] J. D. Laumb, M. J. Holmes, J. J. Stanislowski, X. Lu, B. Forrest and M. McGroddy, "Supercritical CO2 Cycles for Power Production," *Energy Procedia,* vol. 114, pp. 573-580, 2017.

[9] J. Fetvedt, *Coal Syngas Combustor Development for High-Pressure, Oxy-Fuel SC02 Cycle Applications,* 2014.

[10] H. Abdul-Sater, J. Lenertz, C. Bonilha, X. Lu and J. Fetvedt, *A CFD Simulation of Coal Syngas Oxy-Combustion In a High-Pressure Supercritical CO2 Environment,* 2017.

[11] X. Lu, S. Martin, M. McGroddy, M. Swanson, J. Stanislowski and J. Laumb, "Testing of a Novel Post Combustion Acid Removal Process for the Direct-Fired, Oxy-Combustion Allam Cycle Power Generation System," *Journal of Engineering for Gas Turbines and Power,* 2017.

[12] M. P. B. F. M. M. Xijia Lu, A Novel Power Generation System Utilizing Un-treated Sour Gas Fuel, "SPE-192823-MS, ABU DHABI INTERNATIONAL PETROLEUM EXHIBITION & CONFERENCE 12-15 NOVEMBER, , 2018.

[13] G. Collodi, G. Azzaro, N. Ferrari and S. Santos, "Techno-economic Evaluation of Deploying CCS in SMR Based Merchant H2 Production with NG as Feedstock and Fuel," *Energy Procedia,* vol. 114, pp. 2690-2712, 2017.