US006295920B1

(12) **United States Patent**
Barden et al.

(10) **Patent No.: US 6,295,920 B1**
(45) **Date of Patent: Oct. 2, 2001**

(54) **INSULATING PRESS-TYPE COFFEE MAKER AND ACCESSORIES**

(76) Inventors: **Elliot Barden**, P.O. Box 1665, Pacific Palisades, CA (US) 90265; **Sheila S. Turner**, 850 Haverford Ave., Suite 12, Pacific Palisades, CA (US) 90272

(*) Notice: Subject to any disclaimer, the term of this patent is extended or adjusted under 35 U.S.C. 154(b) by 0 days.

(21) Appl. No.: **09/507,905**

(22) Filed: **Feb. 22, 2000**

Related U.S. Application Data

(62) Division of application No. 09/268,569, filed on Mar. 15, 1999, now Pat. No. 6,079,316.

(51) **Int. Cl.**[7] **A47J 31/38**; B65D 25/34

(52) **U.S. Cl.** **99/297**; 99/287; 150/901; 220/449

(58) **Field of Search** 99/285, 286, 287, 99/297, 279, 290; 206/545, 548; 150/901, 154; 220/449

(56) **References Cited**

U.S. PATENT DOCUMENTS

5,570,623 * 11/1996 Lin ..... 99/297 X
5,635,233 * 6/1997 Levinson ..... 99/297 X
5,761,987 * 6/1998 Leon et al. 99/297

* cited by examiner

Primary Examiner—Reginald L. Alexander
(74) *Attorney, Agent, or Firm*—David A. Belasco; Beehler & Pavitt

(57) **ABSTRACT**

The invention pertains to insulated coffee makers and insulating accessories for use with insulated and non-insulated coffee makers. A coffee press brews coffee from a mixture of ground coffee and boiling water placed in a heat resistant container. The mixture is allowed to brew for a specified period after which a plunger affixed to a filter screen is pushed downward in the container. This separates the coffee grounds from the brewed coffee. Coffee press coffee makers provide a superior flavor, however heat tends to dissipate rapidly from the container. The invention includes an insulated cylindrical brewing container. Another variant is an insulated insert fitted onto the coffee press lid. Still another is an insulating jacket extending from the top rim of the coffee press to its base with openings provided for the handle and the spout. The jacket may include an openable means to secure the jacket about the handle. The jacket could also include a hinged flap to seal the spout. Another variation on the invention is an insulated heat tube installed between the handle and frame assembly and the cylindrical brewing container. Another variant of the invention is an insulated handle and frame assembly. The insulated cylindrical brewing container, the insulated tube, and the insulated handle and frame assembly may each incorporate a temperature sensing film to allow continuous brew temperature monitoring. Another variant has an insulated lid. In a final variant, the insulated lid incorporates a hinged insulated flap to cover the spout opening.

15 Claims, 5 Drawing Sheets

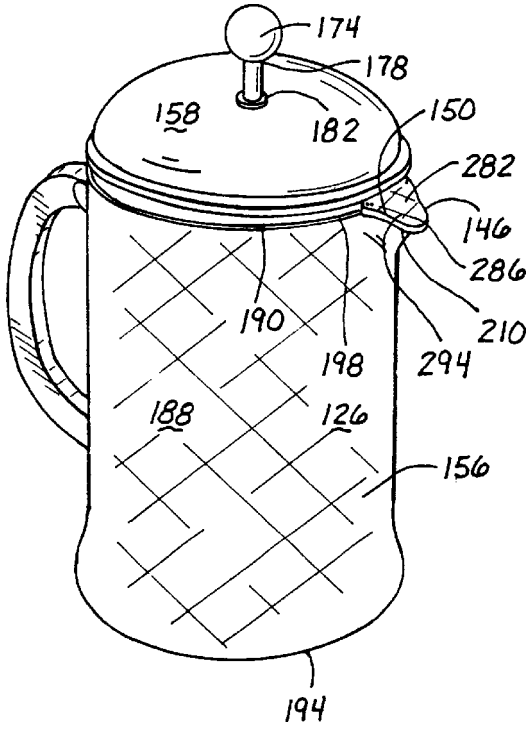

STARBUCKS EX1006

Fig. 1

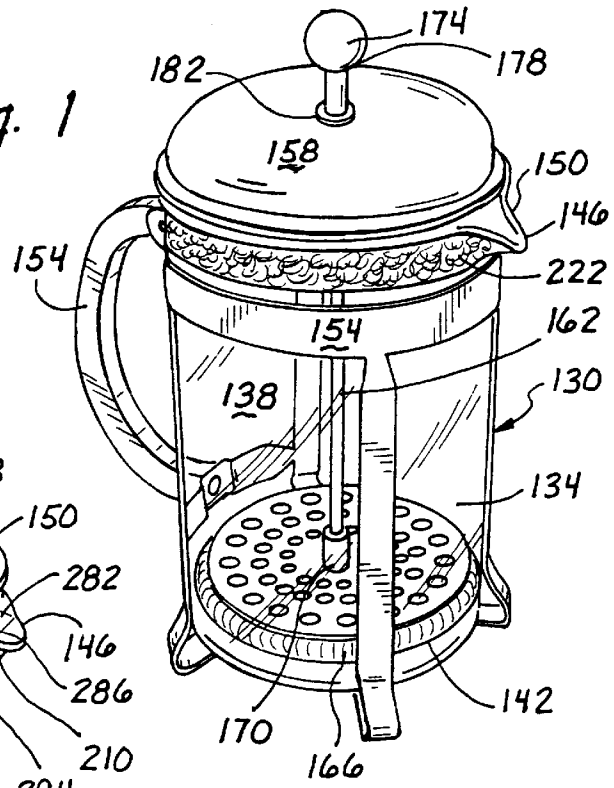

Fig. 2

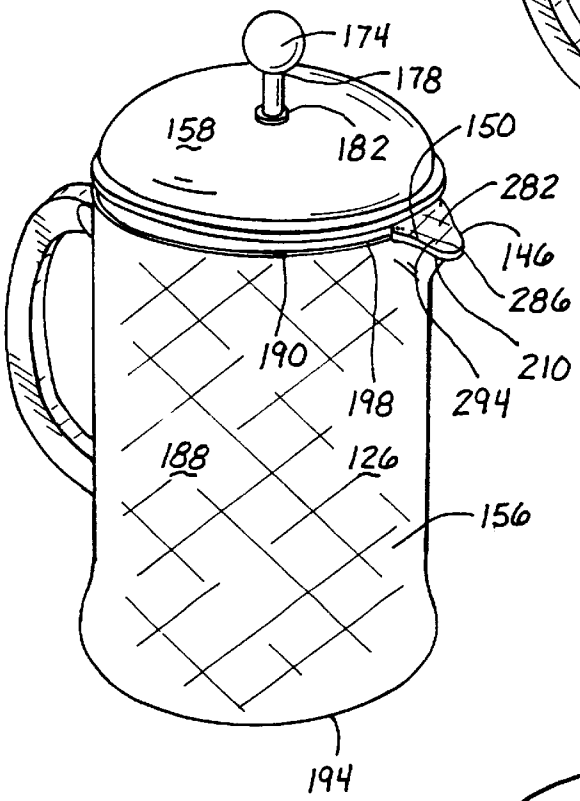

Fig. 2A

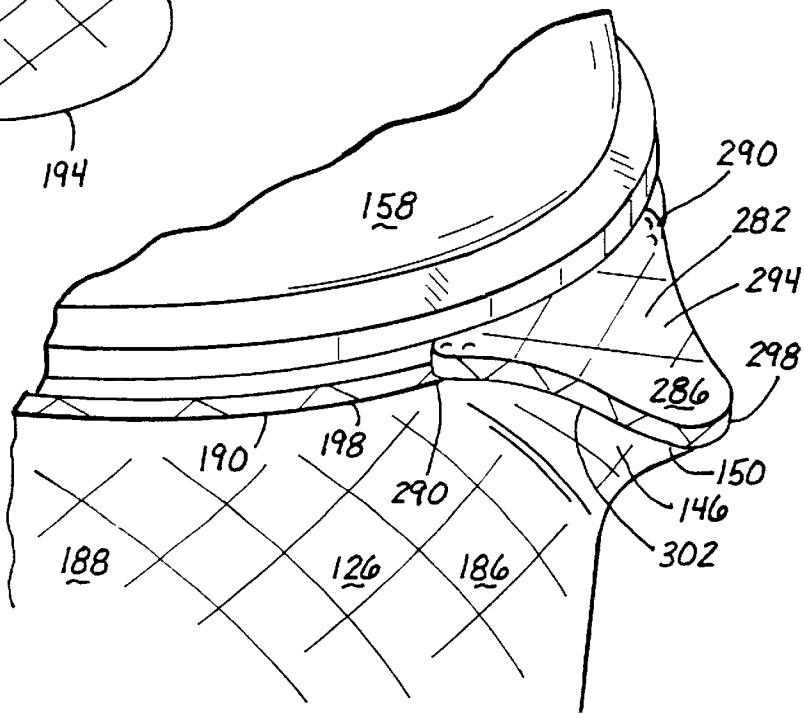

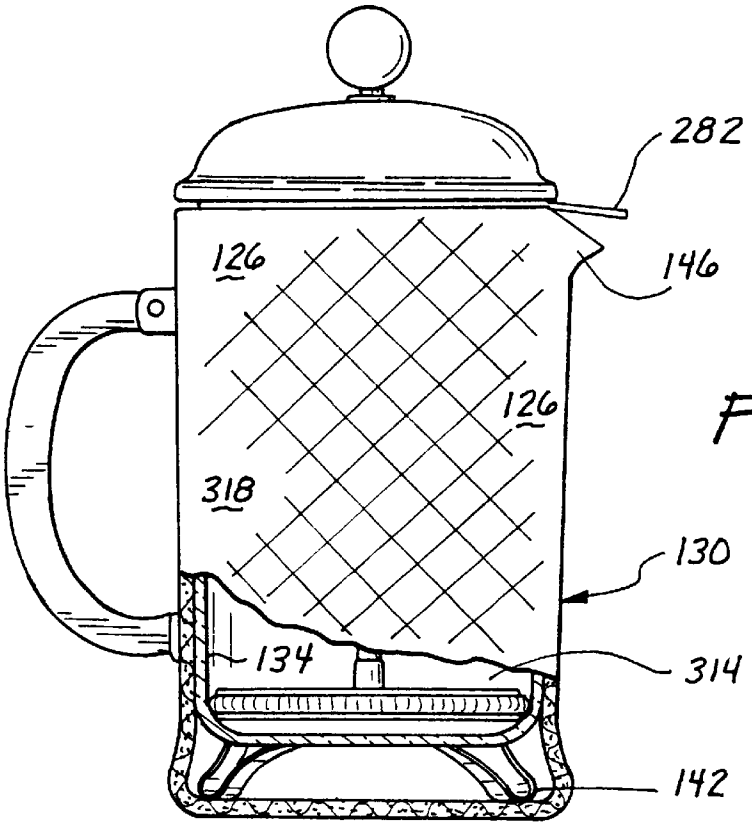
282
146
126
126
318
130
134
314
142

Fig. 3

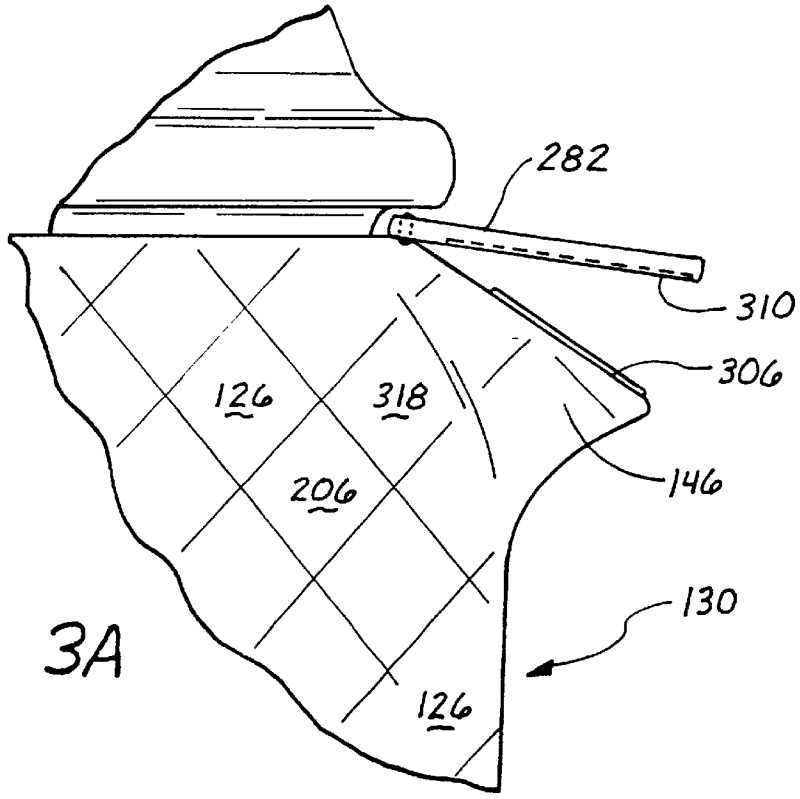
282
310
306
126
318
206
146
130
126

Fig. 3A

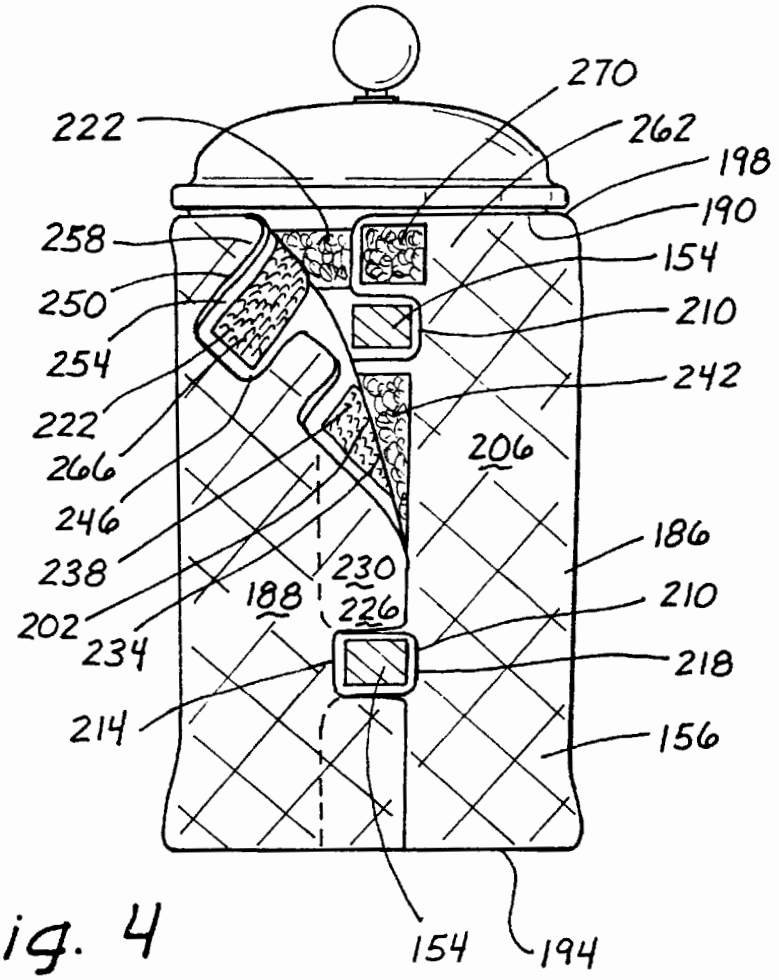
270
222
262
198
190
258
154
250
210
254
242
222
206
266
246
186
238
230
188
210
202
226
234
218
214
156
154
194

Fig. 4

Fig. 10

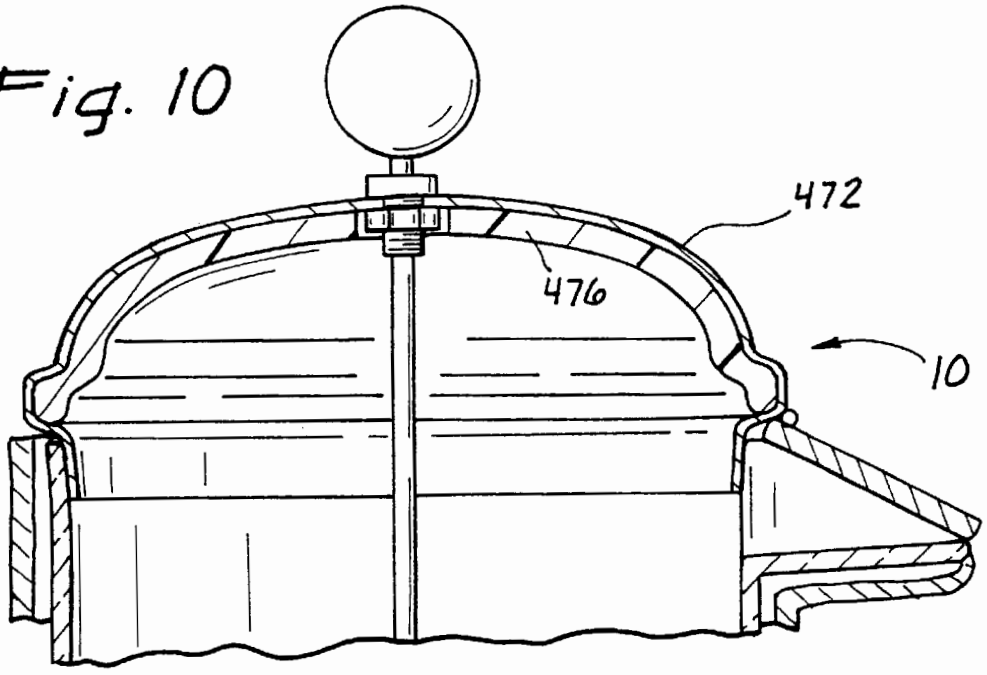
472
476
10

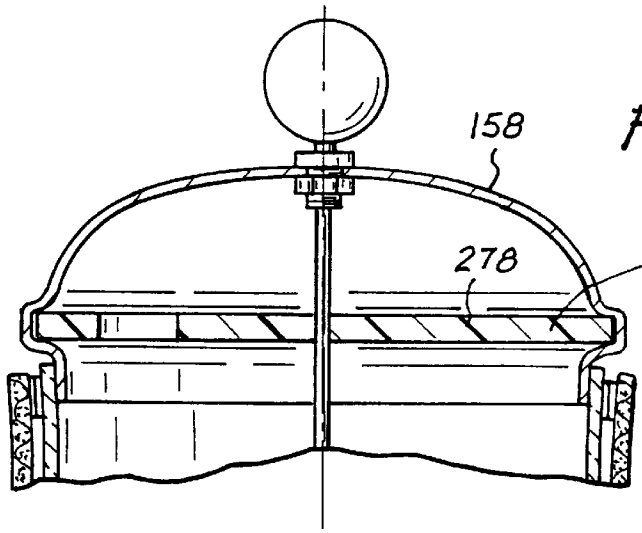

Fig. 5

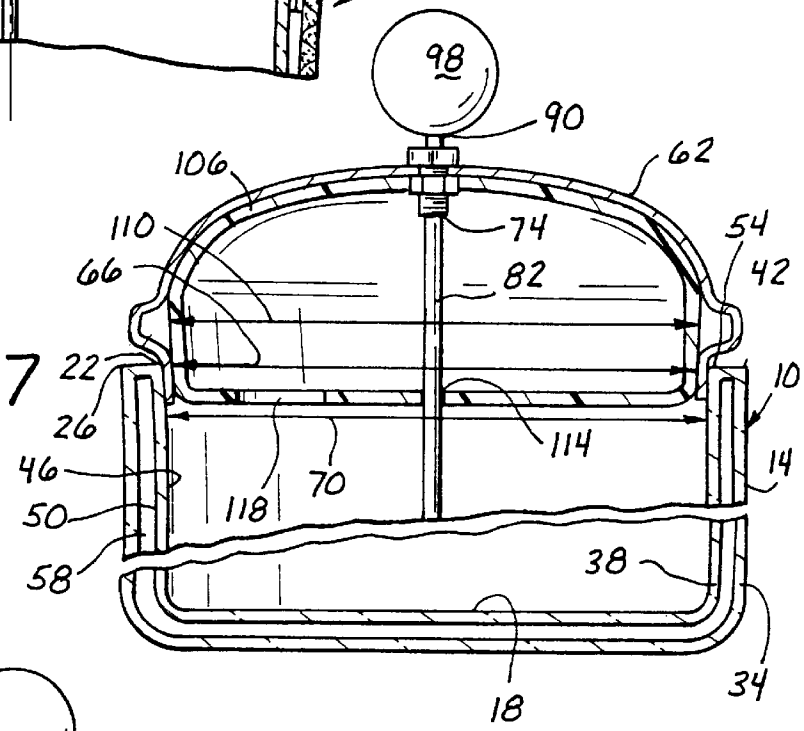

Fig. 7

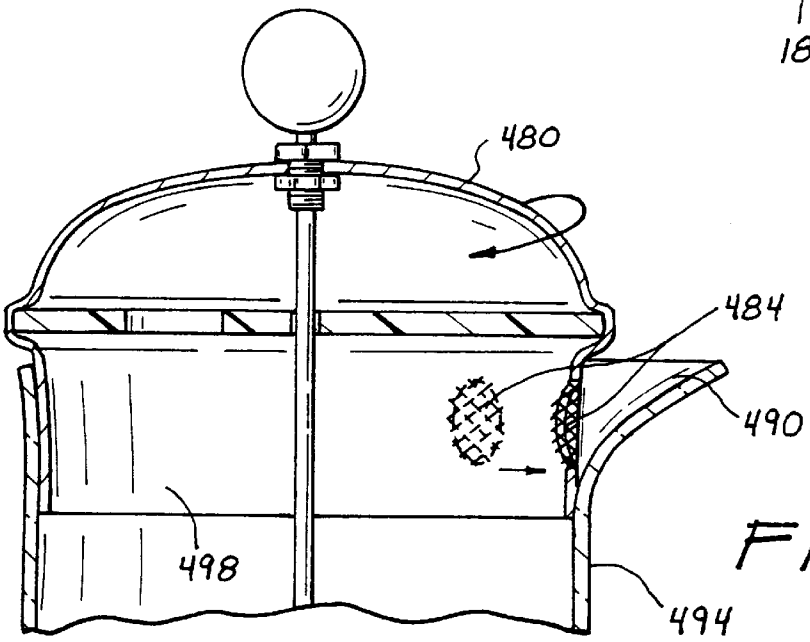

Fig. 11

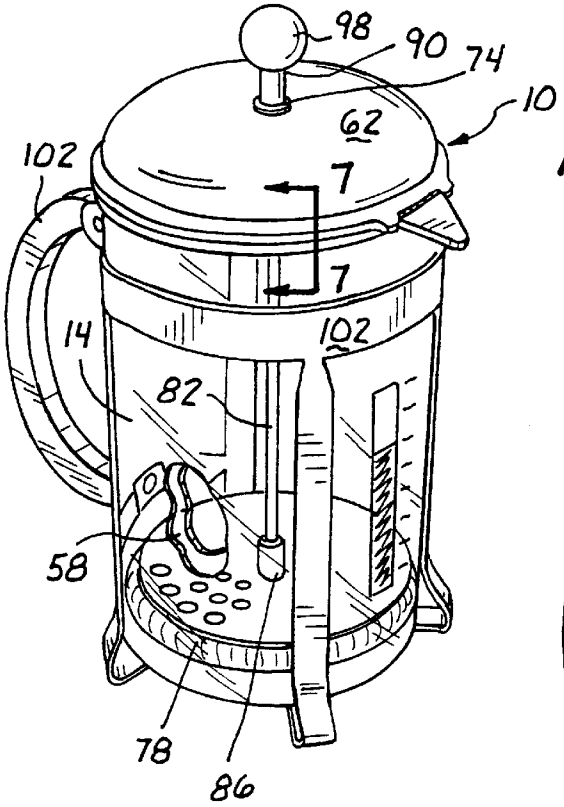

Fig. 6

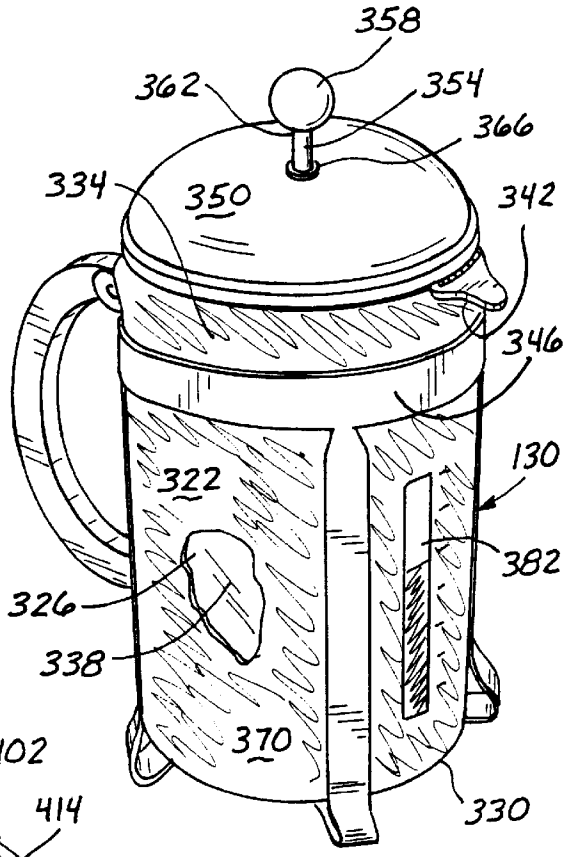

Fig. 8

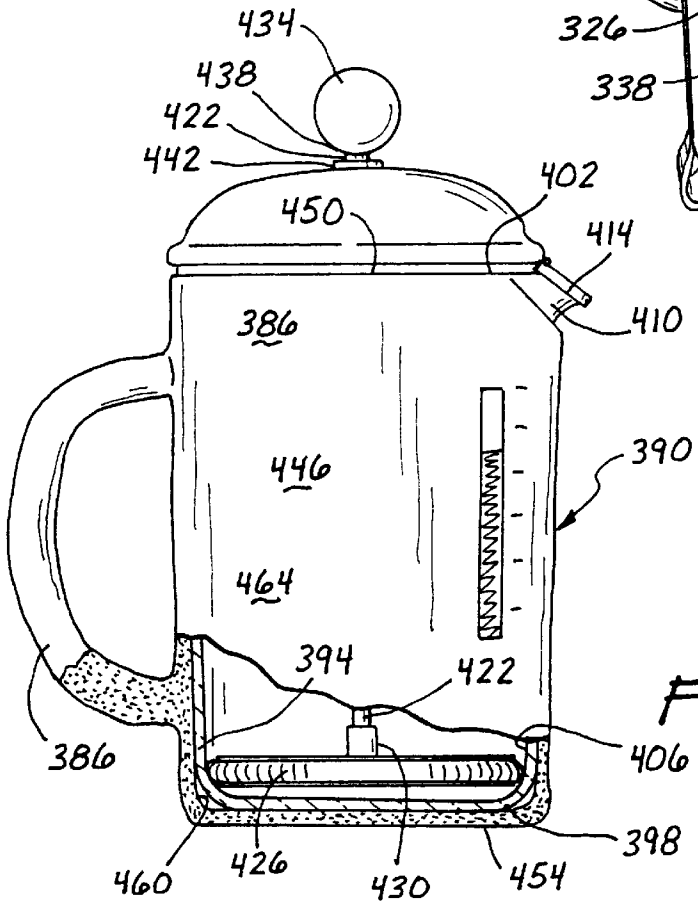

Fig. 9

INSULATING PRESS-TYPE COFFEE MAKER AND ACCESSORIES

This application is a divisional of Ser. No. 09/268,569 filed Mar. 15, 1999, now U.S. Pat. No. 6,079,316.

FIELD OF THE INVENTION

The invention pertains to insulated containers for beverages and more particularly to insulated coffee makers and insulating accessories for use with insulated and non-insulated coffee makers.

BACKGROUND OF THE INVENTION

The French Press or Coffee Press (referred hereinafter as a coffee press) has become a preferred way of brewing coffee among professional coffee tasters and the coffee drinking public in general. The coffee press is a relatively simple device comprising a pitcher (typically made of glass), a lid with a central hole, and a plunger fitted with a fine mesh screen or filter which is operated through the hole in the lid. In use, the ground coffee is placed in the pitcher and boiling water is added. The top is placed on the pitcher with the plunger withdrawn so that the filter is above the grounds and the water, allowing the coffee to brew. After about five minutes, the plunger is pushed down towards the bottom of the pitcher, so that the coffee grounds are separated from the liquid. While the coffee press has the ability to make superior coffee, it has the drawback of allowing the coffee to cool rapidly, thus losing the desired taste and temperature.

The prior art includes a number of inventions directed towards insulating beverage and other liquid containers. U.S. Pat. No. 1,116,932 issued to Schwartz et al. in 1914 provided for an insulating cover for a hot water bottle, the cover serving both to protect the user from burns and to retain the heat within the bottle. U.S. Pat. No. 1,346,485 issued to Arrigunaga in 1920 describes a device for the preparation of coffee or like beverages incorporating an insulated container with removable insulated cover. The cover of the device includes a plunger device with a screen at the lower end to separate coffee grounds or tea leaves from the brewing liquid. This device is designed to brew a single glass or serving of coffee or similar beverage with the beverage being drunk from the container directly.

U.S. Pat. No. 2,154,772 issued to Rathemacher in 1937 illustrates a bottle holder and protector for maintaining a wine bottle in a chilled condition. The invention is basically an insulating cloth that wraps around the bottle with the neck projecting through a hole in the cloth. U.S. Pat. No. 2,482,322 issued to Cortese in 1947 describes an insulating jacket for a baby bottle that zips or snaps over the feeding bottle. Likewise, U.S. Pat. No. 2,522,381 issued to Kramer in 1948 illustrates a baby bottle-insulating bag with a drawstring enclosure.

Of a slightly different nature, U.S. Pat. No. 2,740,544 issued to Vaughan in 1950 relates to a protective cover designed to minimized breakage of glass coffee pots typically used with commercial drip type coffee makers. U.S. Pat. No. 4,197,890 issued to Simko in 1980 describes an insulating jacket for bottles that has a bottom zipper enclosure. Finally, U.S. Pat. No. 5,415,305 issued to Drake-Tipton et al. in 1995 illustrates an insulating sleeve for a beverage pitcher.

U.S. Pat. No. 5,809,867 issued to the present inventors in September 1998, describes an insulating jacket for a press-type coffee maker incorporating a magnetically sealed spout cover and hinged bottom cover.

It is an objective of this invention to provide a means for maintaining beverages brewed in a coffee press at a desirable drinking temperature. It is a further objective of the invention to provide a coffee press that can be easily used and easily cleaned. It is yet a further objective of the invention to provide a means for insulating the lid and spout of the coffee press. It is a still further objective of the invention to provide a means to determine the level of beverage remaining within the coffee press. It is yet a further objective of the invention to provide a means of determining the temperature or relative temperature of the coffee within the coffee press. It is still another objective of the invention to provide accessories for maintaining the temperature of coffee brewed in non-insulated coffee presses.

While many of the desired features of an insulated coffee press or insulating accessories for a press-type coffee maker may be found in the prior art, no invention previously known incorporates all of the desired features in an insulated coffee press or related accessories which is easy and inexpensive to manufacture and effective and simple to use.

SUMMARY OF THE INVENTION

The invention is an insulated press-type coffee maker (coffee press) and accessories. An insulated coffee press may be constructed from the following components. An insulated cylindrical brewing container, formed of heat resistant material is provided. The insulated cylindrical brewing container has a closed bottom, an open top, a top edge and an integral spout formed at the top edge. The insulated cylindrical brewing container includes an outer, closed bottom cylinder and a smaller inner closed bottom cylinder. The outer cylinder has a first upper edge and the smaller inner cylinder has an inner surface, an outer surface and a second upper edge. The inner cylinder is located within the outer cylinder.

The first upper edge of the outer cylinder is sealably joined to the upper edge of the inner cylinder to form the top edge of the cylindrical brewing container, thereby forming an enclosed and sealed space between the outer and inner cylinders.

A cylindrical lid is provided. The lid has an inner diameter and an outer diameter and is sized and shaped to removably attach to the inner surface of the inner cylinder at the top edge of the container. The cylindrical lid includes a centrally located circular orifice.

A circular fine mesh screen is provided. The screen is sized and shaped to fit slidably within the inner cylinder. A plunger rod is provided. The plunger rod has a first end and a second end and is removably attached at its first end to the center of the screen. The rod is sized and shaped to fit slidably through the orifice in the lid.

A plunger handle is affixed to the second end of the plunger rod and a handle and frame assembly is attached to the cylindrical brewing container.

In a variation on the insulated coffee press, the enclosed and sealed space between the inner cylinder and the outer cylinder of the insulated container is evacuated to form a vacuum within the space.

In another variant of the present invention, an insulated coffee press further includes an insulating lid insert. The insulating lid insert is sized and shaped to fit within the lid and has an outer diameter slightly smaller than the inner diameter of the lid. The insulating lid insert has a central orifice sized and located to permit the plunger rod to pass through it. A means for removing or inserting the insulating lid insert into the lid is provided.

Yet another variant on the insulated coffee press includes a temperature sensing means that displays a visible change

in response to a temperature change. The sensing means is affixed to the outer surface of the inner cylinder so as to be visible from the outside of the cylindrical container.

In yet a further variant of the invention, an insulating jacket for a coffee press is provided. The coffee press includes a heat resistant cylindrical brewing container with a cylindrical inner surface, a closed base, a spout with an upper edge. The coffee press further includes a handle and frame assembly, a lid fitting the cylindrical brewing container and a plunger having a fine mesh screen at the bottom end and a handle at the top end. The plunger rod passes through an orifice in the lid and the screen separates brewed coffee from coffee grounds at the base of the cylindrical brewing container.

The jacket includes a fitted sleeve formed of insulating material. The sleeve is shaped to conform roughly to the exterior shape of the cylindrical brewing container. The sleeve has an open top, a closed bottom, a top edge, an inner surface, an outer surface and openings to accommodate the handle and the spout of the cylindrical brewing container. The handle opening has a first side and a second side. A means for removably securing the sleeve to the cylindrical brewing container is provided.

In a still further variation, the means for removably securing the sleeve to the cylindrical brewing container includes a first flap. The first flap has a top surface and an under surface and is sized, shaped and located to extend from one side of the handle opening in the sleeve, through the handle and over the insulating material on the second side of the handle opening. There is a first hooking element attached to the under surface of the first flap and a first loop element attached to the outer surface of the sleeve adjacent to the second side of the handle opening. When the sleeve is positioned over the coffee press, and the first flap is passed through the handle, and the first hooking element is pressed onto the first looping element, the sleeve will be removably secured to the cylindrical brewing container. When the first hooking element is removed from the first looping element and the first flap lifted, the user may determine the level of coffee remaining in the coffee press.

In yet another variant of the invention, the means for removably securing the sleeve to the cylindrical brewing container further includes a second flap. The second flap has a top surface and a under surface and is sized, and shaped to extend from a first side of the sleeve above the handle opening and over the insulating material to a second side of the sleeve above the handle opening. A second hooking element is attached to the under surface of the second flap and a second loop element is attached to the outer surface of the sleeve adjacent to the second handle opening.

In use, the sleeve is positioned over the coffee press and the first flap is passed through the handle. The first hooking element is then pressed onto the first loop element, and the second hooking element is pressed onto the second loop element. The second flap will then be removably secured to the sleeve and the sleeve will be removably secured to the cylindrical brewing container.

In a further variant of the invention, an insulating lid insert for a coffee press is provided. The lid insert includes a cylindrical element formed of an insulating material. The element is sized and shaped to fit frictionally within a lid of a coffee press.

Yet a further variant of the coffee press invention includes a means for removably covering the spout of the cylindrical brewing container.

In still a further variant, the means for removably covering the spout of the cylindrical brewing container includes a flap shaped to cover the spout of the cylindrical brewing container. The flap is hingedly attached to the top edge of the sleeve at either side of the spout opening. The flap has a top surface and a bottom surface. The bottom surface is located upon an upper edge of the spout. The bottom surface of the flap is formed of a non-porous, heat resistant material.

When the coffee press is positioned vertically on its base, the flap rests upon the upper edge of the spout, thereby closing the spout and preserving heat within the coffee press. When the coffee press is tilted to pour coffee from the cylindrical brewing container, the flap will be displaced upwardly away from the spout by the weight of the coffee leaving the cylindrical brewing container.

In another variant of the invention, the means for removably covering the spout of the coffee press includes the top surface of the flap being formed of insulating material.

In still another variant, the means for removably covering the spout of a coffee press further includes a strip of magnetized material affixed to the sleeve adjacent to the upper edge of the spout. The bottom surface of the flap includes material that is attracted by a magnet.

When the coffee press is positioned vertically on its base, the flap rests upon the upper edge of the spout. The flap is held in place by magnetic attraction. This closes the spout and preserves heat within the coffee press. When the coffee press is tilted to pour coffee from the cylindrical brewing container, the flap is displaced upwardly away from the spout by the weight of coffee leaving the container with sufficient force to separate the flap from the upper edge of the spout despite the magnetic force attracting the flap to the magnetic strip.

In yet another variant of the invention, the insulating jacket for a coffee press further includes a heat-reflecting metallic inner surface for maximizing heat retention.

In still another variant the insulating jacket for a coffee press further includes a stain-resistant coating for the outer surface of the sleeve.

In a further variant of the invention, an insulating tube for a coffee press is provided. The coffee press includes a heat resistant cylinder. The cylinder has a closed bottom, an open top, a cylindrical outer surface and a spout. A handle and frame assembly sized to frictionally retain the cylinder is provided, as are a lid fitting the cylinder, a plunger having a fine mesh screen at the bottom end and a handle at the top end. The plunger rod passes through an orifice in the lid and operates to separate brewed coffee from coffee grounds at the bottom of the cylindrical brewing container.

The insulating tube includes a cylinder of heat-reflecting material that has an open top and a closed bottom. The heat-reflecting cylinder is sized and shaped to surround the heat resistant cylinder and to fit slidably between the cylinder and the handle and frame assembly of the coffee press. When the tube is installed between the handle and frame assembly and the cylinder, coffee brewed in the coffee press will better retain its heat due to the heat-reflecting qualities of the tube.

In still a further variant, the insulating tube for a coffee press further includes a temperature sensing means. The means displays a visible change in reaction to a temperature change and is incorporated into the heat-reflecting material of the tube so as to be in contact with the cylindrical brewing container and visible from the outside of the coffee press.

In still another variant of the invention, an insulated handle and frame assembly for a coffee press is provided. The coffee press includes a heat resistant cylinder with a

closed bottom, an open top, a cylindrical inner surface, and a spout that includes an upper edge. The coffee press also includes a lid fitting the heat resistant cylinder, a plunger rod having a fine mesh screen at the bottom end and a handle at the top end. The plunger rod passes through an orifice in the lid and operates to separate brewed coffee from coffee grounds at the bottom of the heat resistant cylinder. The insulated handle and frame assembly includes a cylinder of heat reflecting material having an open top and a closed bottom, an inner surface and an outer surface. The assembly is sized and shaped to surround the heat resistant cylinder.

When the cylindrical brewing container is installed within the insulated handle and frame assembly, coffee brewed in the coffee press will better retain its heat due to the insulating qualities of the handle and frame assembly.

A variant of the insulated handle and frame assembly further a temperature sensing means. The temperature sensing means displays a visible change in reaction to a temperature change. The temperature sensing means is incorporated into the heat-reflecting material of the insulated handle and frame assembly so that it is in contact with the cylindrical brewing container and visible from outside of the coffee press.

In still another variant on the insulated coffee press invention, an insulated lid is provided. The lid includes heat-reflecting material. The material is sized and shaped to fit frictionally within the lid thereby retaining heat within the coffee press

In yet another variant of the invention, the insulated lid includes a means for opening and closing access to the spout of the cylindrical brewing container.

In still a further variant, the means for opening and closing access to the spout of the cylindrical brewing container further includes a projecting lip extending downward from the lid. The lid is rotatable to a first position and a second position. When the lid is rotated to the first position, the projecting lip allows access to the spout from the cylindrical brewing container. When the lid is rotated to the second position, the projecting lip does not allow access to the spout from the cylindrical brewing container.

DESCRIPTION OF THE DRAWINGS

FIG. **1** is a perspective view of a press-type coffee maker illustrating a means for attaching an insulating jacket thereto;

FIG. **2** is a perspective view of the preferred embodiment of the insulating jacket illustrating a hinged spout-covering flap attached to the jacket;

FIG. **2***a* is a detailed perspective view of the FIG. **1** embodiment illustrating the hinged attachment of the spout-covering flap;

FIG. **3** is a cross sectional view of the coffee press and a partial cut-away view of the insulating jacket illustrating the hinged spout-covering flap;

FIG. **3***a* is a side elevational detail of the FIG. **3** embodiment illustrating the hinged spout-covering flap with magnetic attachment means;

FIG. **4** is a side elevation of the closing means about the handle opening of the FIG. **2** embodiment;

FIG. **5** is a cross sectional view of an insulating lid insert for a press-type coffee maker;

FIG. **6** is a partial cut-away perspective view of an insulated press-type coffee maker incorporating a temperature sensing strip and insulating lid insert;

FIG. **7** is a partial cut-away cross sectional view of the FIG. **6** embodiment, taken along the line **7**—**7**, illustrating a second embodiment of an insulating lid insert;

FIG. **8** is a partial cut-away perspective view of a press-type coffee maker illustrating an attached insulating tube fitted between the heat resistant cylinder and the frame incorporating a temperature sensing strip;

FIG. **9** is a partial cut-away side elevational view of a press-type coffee maker incorporating an insulated handle and frame assembly;

FIG. **10** is a cross-sectional side elevational view of an insulating lid for a press-type coffee maker; and

FIG. **11** is a cross-sectional side elevational view of an insulating lid for a press-type coffee maker incorporating a means for opening and closing a passage way to the coffee pot spout.

DETAILED DESCRIPTION OF THE PREFERRED EMBODIMENT

The invention is an insulated press-type coffee maker (coffee press) **10** and accessories. As illustrated in FIGS. **6** and **7**, an insulated coffee press **10** may be constructed from the following components. An insulated cylindrical brewing container **14**, formed of heat resistant material is provided. The insulated cylindrical brewing container **14** has a closed bottom **18**, an open top **22**, a top edge **26** and an integral spout **30** formed at the top edge **26**. The insulated cylindrical brewing container **14** includes an outer, closed bottom cylinder **34** and a smaller inner closed bottom cylinder **38**. The outer cylinder has a first upper edge **42** and the smaller inner cylinder has an inner surface **46**, an outer surface **50** and a second upper edge **54**. The inner cylinder **38** is located within the outer cylinder **34**.

The first upper edge **42** of the outer cylinder **34** is sealably joined to the upper edge **54** of the inner cylinder **38** to form the top edge **26** of the cylindrical brewing container **14**, thereby forming an enclosed and sealed space **58** between the outer **34** and inner **38** cylinders.

A cylindrical lid **62** is provided. The lid **62** has an inner diameter **66** and an outer diameter **70** and is sized and shaped to removably attach to the inner surface **46** of the inner cylinder **38** at the top edge **26** of the container **14**. The cylindrical lid **62** includes a centrally located circular orifice **74**.

A circular fine mesh screen **78** is provided. The screen **78** is sized and shaped to fit slidably within the inner cylinder **38**. A plunger rod **82** is provided. The plunger rod **82** has a first end **86** and a second end **90** and is removably attached at its first end **86** to the center **94** of the screen **78**. The rod **82** is sized and shaped to fit slidably through the orifice **74** in the lid **62**.

A plunger handle **98** is affixed to the second end **90** of the plunger rod **82** and a handle and frame assembly **102** is attached to the cylindrical brewing container **14**.

In a variation on the insulated coffee press **10**, the enclosed and sealed space **58** between the inner cylinder **38** and the outer cylinder **34** of the insulated container **14** is evacuated to form a vacuum within the space **58**.

In another variant of the present invention, an insulated coffee press further includes an insulating lid insert **106**, as illustrated in FIG. **7**. The insulating lid insert **106** is sized and shaped to fit within the lid **62** and has an outer diameter **110** slightly smaller than the inner diameter **66** of the lid **62**. The insulating lid insert **106** has a central orifice **114** sized and located to permit the plunger rod **82** to pass through it. A means **118** for removing or inserting the insulating lid insert **106** into the lid **62** is provided.

Yet another variant on the insulated coffee press **10**, illustrated by FIG. **6**, includes a temperature sensing means

122 that displays a visible change in response to a temperature change. The sensing means **122** is affixed to the outer surface **50** of the inner cylinder **38** so as to be visible from the outside of the cylinder container **14**.

In yet a further variant of the invention, illustrated in FIGS. **1**, **2**, **2***a*, **3**, **3***a* and **4**, an insulating jacket **126** for a coffee press **130** is provided. The coffee press **130** includes a heat resistant cylindrical brewing container **134** with a cylindrical inner surface **138**, a closed base **142**, a spout **146** with an upper edge **150**. The coffee press **130** further includes a handle **154** and frame assembly **156**, a lid **158** fitting the cylindrical brewing container **134** and a plunger rod **162** having a fine mesh screen **166** at the bottom end **170** and a handle **174** at the top end **178**. The plunger rod **162** passes through an orifice **182** in the lid **158**, and the screen **166** separates brewed coffee from coffee grounds at the base **142** of the cylindrical brewing container **134**.

The jacket **126** includes a fitted sleeve **186** formed of insulating material **188**. The sleeve **186** is shaped to conform roughly to the exterior shape of the cylindrical brewing container **134**. The sleeve **186** has an open top **190**, a closed bottom **194**, a top edge **198**, an inner surface **202**, an outer surface **206** and openings **210** to accommodate the handle **154** and the spout **146** of the cylindrical brewing container **134**. The handle opening **210** has a first side **214** and a second side **218**. A means **222** for removably securing the sleeve **186** to the cylindrical brewing container **134** is provided.

In a still further variation, the means **222** for removably securing the sleeve **186** to the cylindrical brewing container **134** includes a first flap **226**. The first flap **226** has a top surface **230** and an under surface **234** and is sized, shaped and located to extend from one side **214** of the handle opening **210** in the sleeve **186**, through the handle **154** and over the insulating material **188** on the second side **218** of the handle opening **210**. There is a first hooking element **238** attached to the under surface **234** of the first flap **226** and a first loop element **242** attached to the outer surface **206** of the sleeve **186** adjacent to the second side **218** of the handle opening **210**.

When the sleeve **186** is positioned over the coffee press **130**, and the first flap **226** is passed through the handle **154**, and the first hooking element **238** is pressed onto the first looping element **242**, the sleeve **186** will be removably secured to the cylindrical brewing container **134**. When the first hooking element **238** is removed from the first looping element **242** and the first flap **226** lifted, the user may determine the level of coffee remaining in the coffee press **130**.

In yet another variant of the invention, also illustrated by FIG. **4**, the means **222** for removably securing the sleeve **186** to the cylindrical brewing container **134** further includes a second flap **246**. The second flap **246** has a top surface **250** and a under surface **254** and is sized, and shaped to extend from a first side **258** of the sleeve **186** above the handle opening **210** and over the insulating material **188** to a second side **262** of the sleeve **186** above the handle opening **210**. A second hooking element **266** is attached to the under surface **254** of the second flap **246** and a second loop element **270** is attached to the outer surface **206** of the sleeve **186** adjacent to the handle opening **210**.

In use, the sleeve **186** is positioned over the coffee press **130** and the first flap **226** is passed through the handle **154**. The first hooking element **238** is then pressed onto the first loop element **242**, and the second hooking element **266** is pressed onto the second loop element **270**. The second flap **246** will then be removably secured to the sleeve **186** and the sleeve **186** will be removably secured to the cylindrical brewing container **134**.

In a further variant of the invention, illustrated in FIG. **5**, an insulating lid insert **274** for a coffee press **130** is provided. The lid insert **274** includes a cylindrical element **278** formed of an insulating material. The element **278** is sized and shaped to fit frictionally within a lid **158** of a coffee press **130**.

Yet a further variant of the coffee press invention, as illustrated in FIGS. **2** and **2***a*, includes a means **282** for removably covering the spout **146** of the cylindrical brewing container **134**.

In still a further variant, also illustrated in FIGS. **2** and **2***a*, the means **282** for removably covering the spout **146** of the cylindrical brewing container **134** includes a flap **286** shaped to cover the spout **146** of the cylindrical brewing container **134**. The flap **286** is hingedly attached to the top edge **198** of the sleeve **186** at either side **290** of the spout **146**. The flap **286** has a top surface **294** and a bottom surface **298**. The bottom surface **298** is located upon an upper edge **302** of the spout **146**. The bottom surface **298** of the flap **286** is formed of a non-porous, heat resistant material.

When the coffee press **130** is positioned vertically on its base **142**, the flap **286** rests upon the upper edge **302** of the spout **146**, thereby closing the spout **146** and preserving heat within the coffee press **130**. When the coffee press **130** is tilted to pour coffee from the cylindrical brewing container **134**, the flap **286** will be displaced upwardly away from the spout **146** by the weight of the coffee leaving the cylindrical brewing container **134**.

In another variant of the invention, also illustrated in FIGS. **2** and **2***a*, the means **282** for removably covering the spout **146** of the coffee press **130** includes the top surface **294** of the flap **286** being formed of insulating material.

In still another variant, illustrated in FIGS. **3** and **3***a*, the means **282** for removably covering the spout **146** of a coffee press **130** further includes a strip of magnetized material **306** affixed to the sleeve **186** adjacent to the upper edge **302** of the spout **146**. The bottom surface **298** of the flap **286** includes material **310** that is attracted by a magnet.

When the coffee press **130** is positioned vertically on its base **142**, the flap **286** rests upon the upper edge **302** of the spout **146**. The flap **286** is held in place by magnetic attraction. This closes the spout **146** and preserves heat within the coffee press **130**. When the coffee press **130** is tilted to pour coffee from the cylindrical brewing container **134**, the flap **286** is displaced upwardly away from the spout **146** by the weight of coffee leaving the container **134** with sufficient force to separate the flap **286** from the upper edge **302** of the spout **146** despite the magnetic force attracting the flap **286** to the magnetic strip **306**.

In yet another variant of the invention, also illustrated by FIG. **3**, the insulating jacket **126** for a coffee press **130** further includes a heat-reflecting metallic inner surface **314** for maximizing heat retention.

In still another variant, also illustrated by FIGS. **3** and **3***a*, the insulating jacket **126** for a coffee press **130** further includes a stain-resistant coating **318** for the outer surface **206** of the sleeve **186**.

In a further variant of the invention, illustrated by FIG. **8**, an insulating tube **322** for a coffee press **130** is provided. The coffee press **130** includes a heat resistant cylinder **326** . The cylinder **326** has a closed bottom **330**, an open top **334**, a cylindrical outer surface **338** and a spout **342**. A handle and

frame assembly **346** sized to frictionally retain the cylinder **326** is provided, as are a lid **350** fitting the cylinder **326**, a plunger rod **354** having a fine mesh screen (not shown) at the bottom end (not shown) and a handle **358** at the top end **362**. The plunger rod **354** passes through an orifice **366** in the lid **350** and operates to separate brewed coffee from coffee grounds at the bottom **330** of the cylinder **326**.

The insulating tube **322** includes a cylinder of heat-reflecting material **370** that has an open top **374** and a closed bottom **378**. The heat-reflecting cylinder **370** is sized and shaped to surround the heat resistant cylinder **326** and to fit slidably between the cylinder **326** and the handle and frame assembly **346** of the coffee press **130**. When the tube **322** is installed between the handle and frame assembly **346** and the cylinder **326**, coffee brewed in the coffee press **130** will better retain its heat due to the heat-reflecting qualities of the tube **322**.

In still a further variant, also illustrated by FIG. **8**, the insulating tube **322** for a coffee press **130** further includes a temperature sensing means **382**. The means **382** displays a visible change in reaction to a temperature change and is incorporated into the heat-reflecting material **370** of the tube **322** so as to be in contact with the heat resistant cylinder **326** and visible from the outside of the coffee press **130**.

In still another variant of the invention, illustrated by FIG. **9**, an insulated handle and frame assembly **386** for a coffee press **390** is provided. The coffee press **390** includes a heat resistant cylinder **394** with a closed bottom **398**, an open top **402**, a cylindrical inner surface **406**, and a spout **410** that includes an upper edge **414**. The coffee press **390** also includes a lid **418** fitting the heat resistant cylinder **394**, a plunger rod **422** having a fine mesh screen **426** at the bottom end **430** and a handle **434** at the top end **438**. The plunger rod **422** passes through an orifice **442** in the lid **418** and operates to separate brewed coffee from coffee grounds at the bottom **398** of the heat resistant cylinder **394**. The insulated handle and frame assembly **386** includes a cylinder of heat reflecting material **446** having an open top **450** and a closed bottom **454**, an inner surface **460** and an outer surface **464**. The assembly **386** is sized and shaped to surround the heat resistant cylinder **394**.

When the heat resistant cylinder **394** is installed within the insulated handle and frame assembly **386**, coffee brewed in the coffee press **390** will better retain its heat due to the insulating qualities of the handle and frame assembly **386**.

A variant of the insulated handle and frame assembly, also illustrated by FIG. **9**, further a temperature sensing means **468**. The temperature sensing means **468** displays a visible change in reaction to a temperature change. The temperature sensing means **468** is incorporated into the heat-reflecting material **446** of the insulated handle and frame assembly **386** so that it is in contact with the heat resistant cylinder **394** and visible from outside of the coffee press **390**.

In still another variant on the insulated coffee press invention, illustrated by FIG. **10**, an insulated lid **472** is provided. The lid **472** includes heat-reflecting material **476**. The material **476** is sized and shaped to fit frictionally within the lid **472** thereby retaining heat within the coffee press **10**.

In yet another variant of the invention, illustrated by FIG. **11**, the insulated lid **480** includes a means **484** for opening and closing access to the spout **490** of the cylindrical brewing container **494**.

In still a further variant, also illustrated by FIG. **11**, the means **484** for opening and closing access to the spout **490** of the cylindrical brewing container **494** further includes a projecting lip **498** extending downward from the lid **480**. The lid **480** is rotatable to a first position and a second position. When the lid **480** is rotated to the first position, the projecting lip **498** allows access to the spout **490** from the cylindrical brewing container **494**. When the lid **480** is rotated to the second position, the projecting lip **498** does not allow access to the spout **480** from the cylindrical brewing container **494**.

What is claimed is:

1. An insulating jacket for a coffee press, said coffee press comprising a heat resistant cylindrical brewing container having a cylindrical inner surface, a closed base, a spout with an upper edge, a handle and frame assembly, a lid fitting the cylindrical brewing container and a plunger rod having a fine mesh screen at the bottom end and a handle at the top end, the plunger rod passes through an orifice in the lid and the screen separates brewed coffee from coffee grounds at the base of the cylindrical brewing container, said jacket comprising:

a fitted sleeve formed of insulating material, said sleeve being shaped to conform roughly to the exterior shape of the cylindrical brewing container;

said sleeve having an open top, a closed bottom, a top edge, an inner surface, an outer surface and openings to accommodate the handle and the spout of the cylindrical brewing container cylindrical brewing container;

said handle opening having a first side and a second side; and

a means for removably securing the sleeve to the cylindrical brewing container.

2. An insulating jacket for a coffee press, as described in claim **1** wherein the means for removably securing the sleeve to the cylindrical brewing container further comprises:

a first flap, said first flap having a top surface and an under surface and being sized, shaped and disposed to extend from one side of the handle opening in the sleeve, through the handle and over the insulating material on the second side of the handle opening;

a first hooking element fixedly attached to the under surface of said first flap;

a first loop element fixedly attached to the outer surface of the sleeve adjacent the second side of the handle opening;

whereby when the sleeve is positioned over the coffee press, and the first flap is passed through the handle, and the first hooking element is pressed onto the first loop element, the sleeve will be removably secured to the cylindrical brewing container; and

whereby, when the first hooking element is removed from the first loop element and the first flap lifted, the user may determine the level of coffee remaining in the coffee press.

3. An insulating jacket for a coffee press, as described in claim **2** wherein the means for removably securing the sleeve to the cylindrical brewing container further comprises:

a second flap, said second flap having a top surface and an under surface and being sized, shaped and disposed to extend from a first side of the sleeve above the handle opening, to a second side of the sleeve above the handle opening;

a second hooking element fixedly attached to the under surface of said first flap;

a second loop element fixedly attached to the outer surface of the sleeve adjacent the second of the handle opening; and

whereby, when the sleeve is positioned over the coffee press, and the first flap is passed through the handle, and the first hooking element is pressed onto the first loop element, and the second hooking element is pressed onto the second loop element the second flap will be removably secured to the sleeve and the sleeve will be removably secured to the cylindrical brewing container.

4. An insulating jacket for a coffee press, as described in claim **1** further comprising a means for removably covering the spout of the cylindrical brewing container.

5. An insulating jacket for a coffee press, as described in claim **4** wherein the means for removably covering the spout of the cylindrical brewing container further comprises:

a flap shaped to cover the spout of the cylindrical brewing container, said flap being hingedly attached to the top edge of the sleeve at either side of the spout opening;

said flap having a top surface and a bottom surface, said bottom surface disposed upon an upper edge of the spout;

said bottom surface being formed of a non-porous, heat resistant material; and

wherein, when the coffee press is positioned vertically on its base the flap rests upon the upper edge of the spout, thereby closing the spout and preserving heat within the coffee press, and when the coffee press is tilted to pour coffee from the cylindrical brewing container, the flap will be displaced upwardly away from the spout by the weight of coffee leaving the cylindrical brewing container.

6. A means for removably covering the spout of the coffee press as described in claim **5** wherein the top surface of the flap is formed of insulating material.

7. A means for removably covering the spout of the coffee press as described in claim **5**, further comprising:

a strip of magnetized material affixed to the sleeve adjacent the upper edge of the spout;

said bottom surface of the flap being formed of material attracted by a magnet; and

wherein, when the coffee press is positioned vertically on its base the flap rests upon the upper edge of the spout, said flap being held in place by magnetic attraction, thereby closing the spout and preserving heat within the coffee press, and when the coffee press is tilted to pour a coffee from the cylindrical brewing container, the flap will be displaced upwardly away from the spout by the weight of coffee leaving the container with sufficient force to separate the flap from the top edge of the spout despite the magnetic force attracting the flap to the magnetic strip.

8. An insulating jacket for a coffee press as described in claim **1** further comprising a heat-reflecting metallic inner surface for maximizing heat retention.

9. An insulating jacket for a coffee press as described in claim **1** further comprising a stain-resistant coating for the outer surface of the sleeve.

10. An insulating tube for a coffee press, said coffee press comprising a heat resistant cylinder having a closed bottom, an open top, a cylindrical inner surface, a spout, a handle and frame assembly sized to frictionally retain the cylinder, a lid fitting the cylinder, a plunger rod having a fine mesh screen at the bottom end and a handle at the top end, the plunger rod passes through an orifice in the lid and operates to separate brewed coffee from coffee grounds at the bottom of the cylinder, said tube comprising:

a cylinder of heat-reflecting material having an open top and a closed bottom;

said cylinder being sized and shaped to surround the heat-reflecting cylinder and to fit slidably between the cylinder and the handle and frame assembly of the coffee press; and

whereby, when the tube is installed between the handle and frame assembly and the cylinder, coffee brewed in the coffee press will better retain its heat due to the heat-reflecting qualities of the tube.

11. An insulating tube for a coffee press as described in claim **10**, further comprising:

a temperature sensing means, said means displaying a visible change in reaction to a temperature change; and

said means being incorporated into the heat-reflecting material of the tube so as to be in contact with the cylindrical brewing container and visible from the outside of the coffee press.

12. An insulated handle and frame assembly for a coffee press, said coffee press comprising a heat resistant cylinder having a closed bottom, an open top, a cylindrical inner surface, a spout, a lid fitting the heat resistant cylinder, a plunger rod having a fine mesh screen at the bottom end and a handle at the top end, the plunger rod passes through an orifice in the lid and operates to separate brewed coffee from coffee grounds at the bottom of the heat resistant cylinder, said insulated handle and frame assembly comprising:

a cylinder of heat-reflecting material having an open top and an closed bottom;

said cylinder being sized and shaped to surround the heat resistant cylinder;

a temperature sensing means, said means displaying a visible change in reaction to a temperature change; and

said means being incorporated into the heat-reflecting material of the tube so as to be in contact with the cylindrical brewing container and visible from the outside of the coffee press; and

whereby, when the coffee press is installed within the handle and frame assembly, coffee brewed in the coffee press will better retain its heat due to the insulating qualities of the tube.

13. An insulated handle and frame assembly for a coffee press as described in claim **12**, further comprising:

an insulated lid;

said insulated lid including insulating material sized and shaped to fit within the lid.

14. An insulated lid for a coffee press, as described in claim **13**, further comprising a means for opening and closing access to said spout of said cylindrical brewing container.

15. An insulated lid for a coffee press, as described in claim **14** wherein said means for opening and closing access to said spout of said cylindrical brewing container further comprises:

a projecting lip extending downwardly from the lid;

said lid being rotatable to a first position and a second position;

and wherein, when said lid is rotated to said first position said projecting lip allows access to said spout from said cylindrical brewing container;

and wherein, when said lid is rotated to a said second position said projecting lip does not allow access to said spout from said cylindrical brewing.

* * * * *