US 20070295760A1

(19) United States

(12) Patent Application Publication

(10) Pub. No.: US 2007/0295760 A1

(43) Pub. Date: Dec. 27, 2007

Geroult et al.

(54) POURER CONTAINER AND BREWING APPLIANCE COMPRISING SAME

(76) Inventors: **Marc Geroult**, Oisseau-le Petit (FR); **Christian Jouatel**, Radon (FR)

Correspondence Address:
YOUNG & THOMPSON
745 SOUTH 23RD STREET
2ND FLOOR
ARLINGTON, VA 22202 (US)

(21) Appl. No.: 11/658,140

(22) PCT Filed: Jun. 28, 2005

(86) PCT No.: PCT/FR05/01644

§ 371(c)(1),
(2), (4) Date: Mar. 23, 2007

(30) Foreign Application Priority Data

Jul. 26, 2004 (FR) 0408242

Publication Classification

(51) Int. Cl.
A47G 19/12 (2006.01)

(52) U.S. Cl. 222/472

(57) ABSTRACT

A pourer container includes a body (**2**) including a pouring member (**9**), an opening (**4**) and defining a chamber (**3**), a lid (**5**) including an inner check valve (**40**) and a conduit (**24**) communicating the chamber with the pourer member, the check valve being mobile between a closed position wherein it closes the conduit and an open position wherein it allows communication through the conduit and a pouring control (**30**) connected to the valve through an actuating mechanism adapted to place the check valve in open position when the pouring control is actuated. The lid (**5**) further includes a pouring indicator (**31**) connected to the pouring control and mobile between a closing position and an opening position wherein it projects outside the container upon actuation of the pouring control. A brewing appliance including such a container is also disclosed.

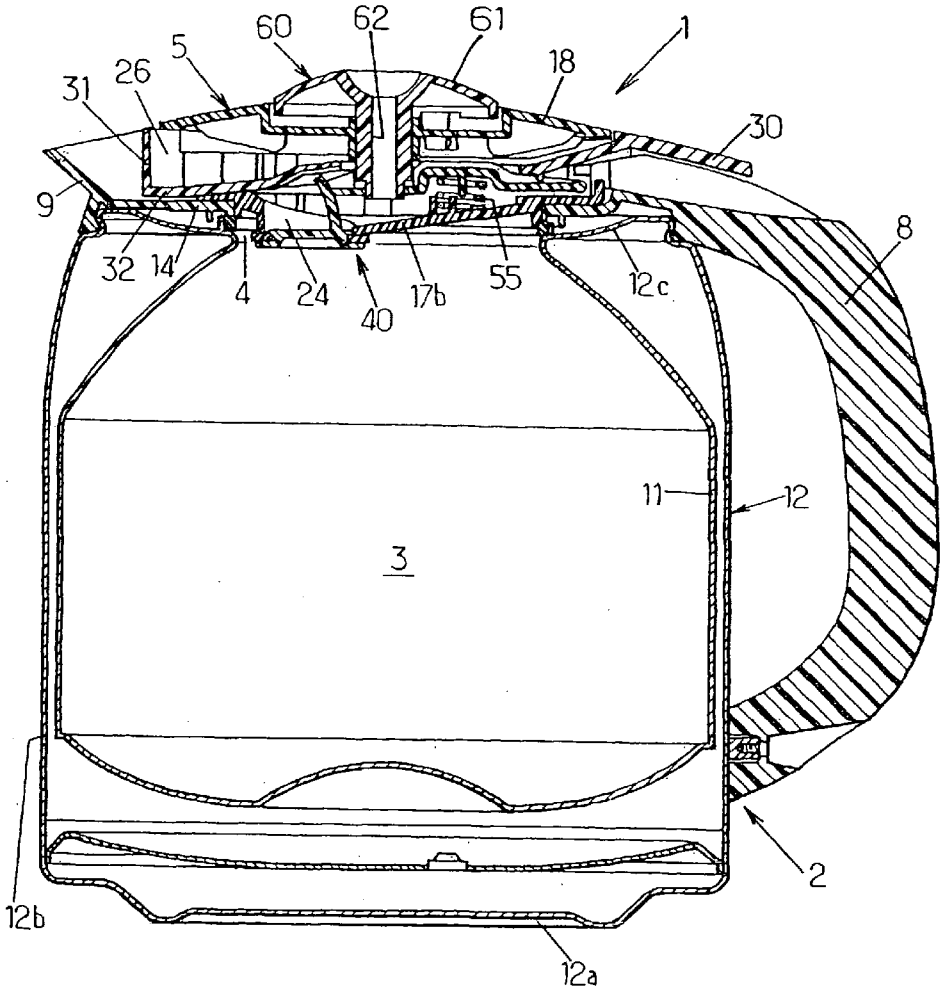

STARBUCKS EX1015

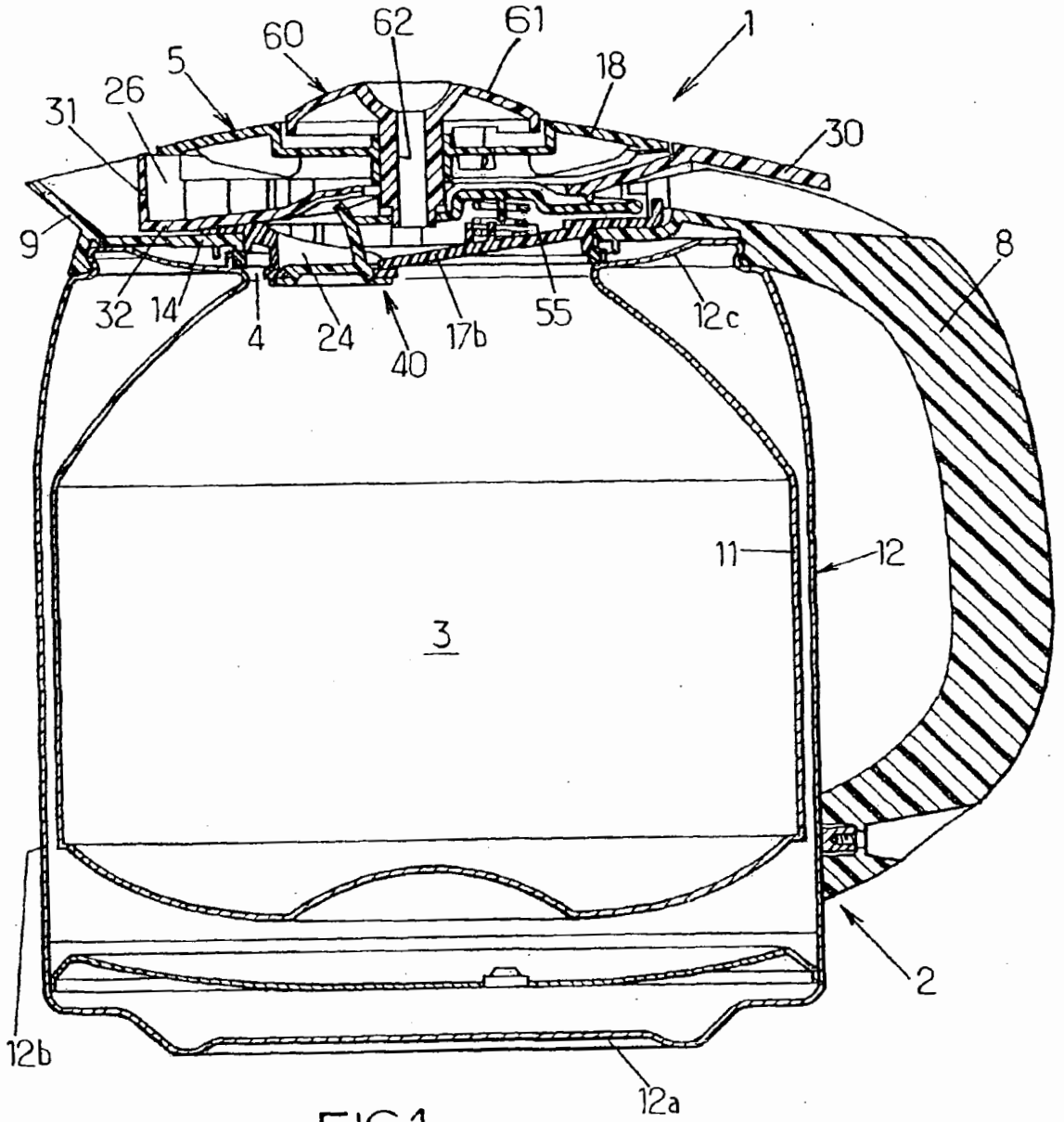

FIG.1.

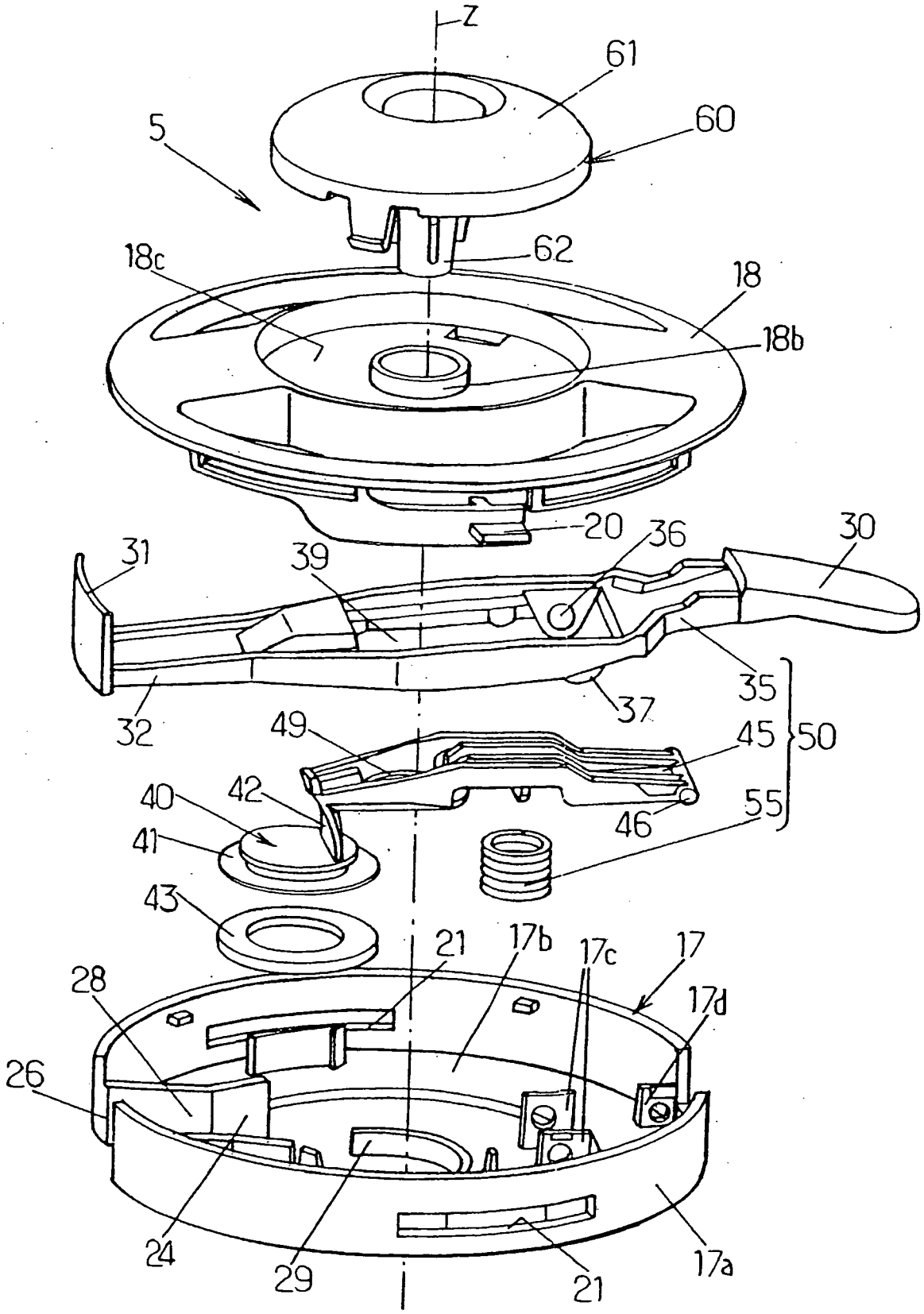
Z
61
60
5
62
18c
18
18b
20
36
30
31
39
35
37
32
49
45
50
40
42
46
55
41
43
21
17b
17c
17
28
17d
26
24
29
21
17a

FIG.2.

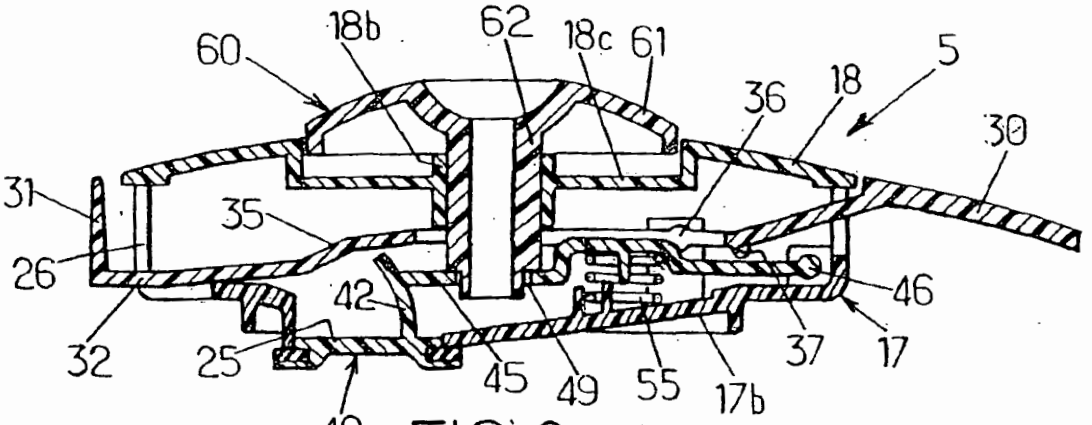

FIG. 3.

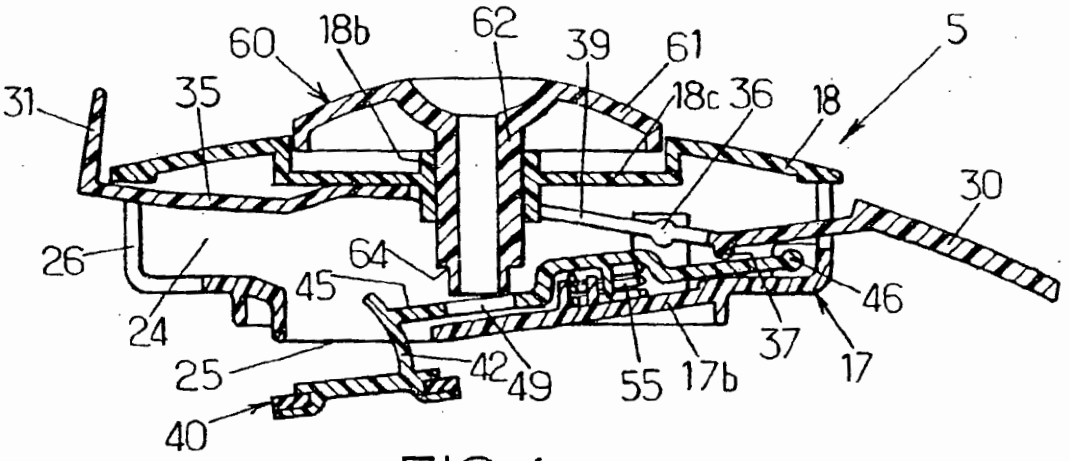

FIG. 4.

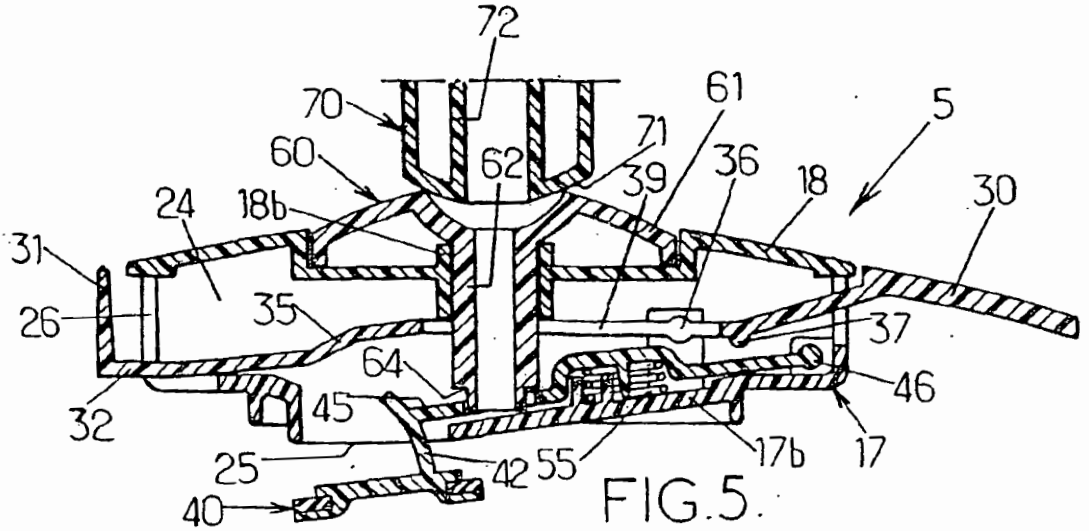

FIG. 5.

POURER CONTAINER AND BREWING APPLIANCE COMPRISING SAME

[0001] The present invention relates to a pouring receptacle, and particularly but not exclusively, to an isothermal receptacle adapted for a coffeemaker or an electric tea maker.

[0002] More particularly, the invention relates to a pouring receptacle comprising:

[0003] a body comprising a pouring member and an upper opening, and defining a chamber adapted to contain a liquid;

[0004] a cover adapted to close the opening, and comprising a check valve internal to the chamber and a conduit ensuring fluid communication from the chamber toward the pouring member through a first and a second outlet, said check valve being movable between a closed position in which it closes said conduit and an open position in which it permits communication between the first and second outlets of the cover; and

[0005] a pouring control connected to said check valve by an actuating mechanism and adapted to place said check valve in an open position when the pouring control is actuated.

[0006] There is known a pouring receptacle of this type from FR 2 752 712, in which the chamber is thermally insulated. Given that the check valve connected to the cover is located within the chamber, its open position is thus not visible by the user when he wants to pour a beverage. Also, in the absence of any visual indication permitting the user to know that the chamber is in communication or not with the pouring member, it may happen that the user does not understand intuitively the function of the pouring control. Moreover, said users not knowing in which position the check valve is, hesitate to carry out the pouring movement or on the contrary carry out a too abrupt pouring movement. In the opinion of certain users, such isothermal pouring receptacles are thus poorly adapted to the user.

[0007] The present invention has for its object to overcome this drawback by providing a pouring receptacle whose use will be more intuitive and more comfortable.

[0008] To this end, the present invention has for its object a pouring receptacle of the mentioned type, characterized in that the cover comprises moreover an indicator or pouring connected to the pouring control and movable between a so-called closing position and a so-called opening position in which it projects outside the receptacle when the pouring control is actuated.

[0009] Thus, the user has an indicator connected to the cover, clearly visible when he actuates the pouring control, permitting him thus to decide intuitively that the action of this control has an effect on the check valve, and as a result, on the possibility of pouring or not the beverage contained in the receptacle. It will thus be seen that the majority of the users will carry out the pouring movement in a more natural manner.

[0010] In the preferred embodiments of the invention, reference will be had moreover to one and/or the other of the following arrangements:

[0011] the pouring indicator is a blade carried by an arm connected to the pouring control and projecting outside the cover through the second outlet;

[0012] the pouring control is resiliently urged toward an inactive position in which the pouring indicator will occupy its closing position;

[0013] the pouring indicator carries out, from its closing position toward its opening position, a movement overall directed upwardly and of an amplitude suitable that the pouring indicator will project beyond the upper surface of the cover;

[0014] the actuating mechanism comprises a first lever swingably mounted relative to the cover about a transverse axis, and extending longitudinally between a first end secured to the pouring control and a second end connected to the pouring indicator, and a second lever having a first end mounted pivotably relative to the cover about an axis and a second end secured to the check valve, said second lever being urged by a resilient member toward a position in which the check valve is in closed position, and the first lever having a finger adapted to come to bear against the second lever, said first and second levers being arranged relative to each other such that the actuation of the pouring control brings the check valve into open position and the pouring indicator into the opening position;

[0015] the swinging axis of the first lever is positioned longitudinally at a predetermined distance from the pouring control so as to amplify the movement of the pouring indicator relative to the movement of the pouring control;

[0016] the cover comprises moreover a filling means movably mounted in the cover and adapted to act on the second lever so as to bring the check valve into open position during actuation of said filling means, said first lever having an opening through which freely passes the filling means.

[0017] The present invention relates also to an infusion apparatus, such as for example a coffeemaker or a tea maker, comprising a pouring receptacle as defined above, in which the infusion apparatus comprises an actuating member provided with an infused beverage outlet and adapted to actuate the filling means of the pouring receptacle when the latter is correctly positioned relative to said outlet.

[0018] Because of the coaction by simple contact between the first and second levers, the pouring indicator remains in the closing position when the filling means is actuated. There is no risk that this indicator will come into contact with a portion of the apparatus.

[0019] Other characteristics and advantages of the invention will become apparent from the description which follows, given by way of non-limiting example, with reference to the accompanying drawings, in which:

[0020] FIG. **1** is a vertical cross-sectional view of an isothermal pouring receptacle according to the invention, comprising a cover;

[0021] FIG. **2** is an exploded view of the cover shown in FIG. **1**;

[0022] FIG. **3** is a simplified cross-sectional view of the cover shown in FIG. **1**, in which the cover is of a so-called closed configuration;

[0023] FIG. **4** is a view analogous to that of FIG. **3** in which the cover is in a so-called pouring configuration;

[0024] FIG. **5** is a view similar to FIG. **3** in which the cover is in a so-called filling configuration.

[0025] In the different figures, the same reference numerals are used to designate identical or similar elements.

[0026] In FIG. **1** there is shown a pouring receptacle **1**. It is more particularly an isothermal receptacle adapted to be placed below the coffee outlet of a drip coffeemaker so as to gather the coffee product and to maintain the latter hot until poured by the user. But it could be a pouring receptacle that is not thermally insulated, or which will not be used with a particular infusion apparatus.

[0027] The receptacle **1** comprises a body **2** which defines a chamber **3** and has an upper opening **4** permitting filling the chamber **3**. A removable cover **5** is provided to close the opening **4** of the body.

[0028] The body **2** moreover comprises a gripping handle **8**, a pouring member **9** and walls delimiting the chamber **3** and the opening **4**.

[0029] The pouring member **9** is present in the form of a spout arranged opposite the handle **8** on a perimeter **14** delimiting the upper opening **4**, but the pouring member could have a substantially different configuration. It will be noted that the pouring member **9** does not communication directly with the chamber **3**, but is separated from the latter by the perimeter **14** of the opening of the cover **5** when the latter is in place.

[0030] If it is an isothermal receptacle, the walls of the body **2** comprise an internal wall **11** which delimits the chamber **3** and an external wall **12** separated from the internal wall by a space filled with air, which ensures thermal insulation between the container and the chamber **3** and the exterior of the receptacle **1**. The outer wall **12** comprises a portion **12***a* defining the bottom of the receptacle, a portion **12***b* forming a sidewall which is overall cylindrical and an upper portion **12***c* which extends to the inner wall **11**, such that this latter is suspended in the internal space defined by the external wall **12**.

[0031] In the illustrated embodiment, the internal and external walls (**11**, **12**) are metal, but they could also be of a plastic material insulated from each other by the air or any other insulation. The body could also comprise an isothermal glass flask, or else a wall only of plastic, in the case in which it is not necessary that the receptacle be insulated.

[0032] Preferably, the handle **8**, the pouring spout **9** and the periphery **14** of the opening **4** are made of a same piece of plastic material which is fixed by any suitable means to the upper portion **12***c* of the outer wall **12**.

[0033] The perimeter **14** of the opening **4** has a horizontal annular portion and a vertical cylindrical portion, not shown in the figures, which extends from the external wall of the annular portion. However, this vertical cylindrical portion has a notch at the level of the pouring member **9**, such that at this position, the horizontal annular portion extends up to the pouring member.

[0034] As is better seen in FIG. **2**, the cover **5** comprises a cup **17** formed by a circular sidewall **17***a* and a bottom **17***b*, as well as a circular upper surface **18**. In the illustrated embodiment, the cup **17** and the upper surface **18** are assembled so as to be rotatable relative to each other about a central vertical axis Z. This permits having a locking system for the cover **5** on the body **2** with the help of lugs **20** secured to the upper surface **18**, which pass through openings **21** in the cup **17** and coact with release (not shown) formed in the vertical portion of the periphery **14** of the opening **4**, the bottom **17***b* of the cover resting on the horizontal annular portion of this periphery. A coaction between the cover **5** and the perimeter **14** of the opening ensures preferably a certain sealing between these two members.

[0035] The cover **5** comprises a conduit **24** extending from a first outlet **25**, shown in FIGS. **4** and **5**, formed in the bottom **17***b*, and a second outlet **26** in the sidewall **17***a* of the cover. The second outlet **26** is arranged relative to the locking system for the cover on the body **2**, such that the second outlet **26** will face the pouring member **29** and the conduit **24** ensures fluid communication between the chamber **3** and the pouring member **9** in the locked position. It will be noted that in the illustrated embodiment, the conduit **24** is defined by internal walls of the cup **17** and by an upper surface **18** of the cover, said internal walls being particularly formed, as shown in FIG. **2**, by ribs **28** and a flange **29** in the arc of a circle, oriented toward the first outlet **25**. However, it could be a conduit having a substantially closed tubular configuration between the two outlets (**25**, **26**).

[0036] The cover **5** also comprises a pouring control **30** connected, in a manner which will be described in detail hereafter, to a check valve **40** which is movable between the closed position in which it closes the outlet **25** and an open position in which it permits flow of fluid between the first and the second outlets (**25**, **26**) of the conduit **24**, particularly when the pouring control **30** is actuated.

[0037] In the illustrated embodiment, and as better visible in FIG. **2**, the check valve **40** comprises a disc **41** adapted to cover the outlet **25** of the conduit **24**, a vertical arm **42** adapted to be moved through the outlet **25** and a sealing ring **43** permitting increasing the sealing between the disc **41** and the periphery of the outlet **25**. As can be seen in FIG. **3**, in the closed position, the check valve **40** is pressed against the outer periphery of the outlet **25** under the influence of the traction exerted inwardly of the cover **5** by the arm **42**. In the open position, shown in FIGS. **4** and **5**, the check valve **40** is spaced from the bottom **17***b* of the cover, such that a fluid can flow through the space separating the check valve **40** from the periphery of the outlet **25**.

[0038] It will be noted that the check valve **40** is located in the chamber **3** of the receptacle, whether in the open or closed position, when the cover is mounted on the body **2**, which is to say in the normal use position. This arrangement of check valve **40** permits forming with the bottom **17***b* of the cover a continuous wall delimiting the chamber **3**, thereby avoiding loss of heat through the cover **5**. In the case in which it is not necessary that the receptacle be isothermal, or even in the case in which the conduit **24** will comprise at least one more closed portion, the check valve could be arranged in the conduit **24** between the first and second outlets. But even in this case, the check valve would be

internal to the chamber and as a result, not visible from outside the receptacle under normal conditions of use, such that a user could not determine if it is in the open or closed position.

[0039] The cover **5** comprises moreover an indicator of pouring **31** connected to the pouring control **30** and movable between a so-called closing position, shown in FIG. **3**, in which it is arranged within the pouring member **9** when the pouring control **30** is not activated, and a so-called opening position, shown in FIG. **4**, in which it projects outside the receptacle when the pouring control **30** is actuated.

[0040] The pouring indicator **31** is present in the form of a plate in the arc of a circle, as shown in FIG. **2**, covering substantially the surface of the second outlet **26** and located facing this latter outside the cover **5**. This arrangement of the pouring indicator **31** suggests to the user that in the closing position, it closes the second outlet **26** of the cover **5**, although it does not have this function when the conduit **24** is closed by the check valve **40**. As a result, the pouring indicator **31** could have a quite different shape and be located differently relative to the second outlet **26** of the cover.

[0041] The plate **31** is secured at its lower end to an arm **32** passing through the second outlet **26**, which permits connecting the pouring indicator **31** to the pouring control **30** located diametrically opposed relative to the cover, by an actuating mechanism **50** internal to the cover and as a result not visible to the user.

[0042] On the other hand, in the opening position, shown in FIG. **4**, the pouring indicator **31** projects outside the receptacle, and particularly beyond the upper surface **18** of the cover **5**, which permits the user to know that the actuation of the pouring control **30** has an effect on the cover **5** which closes the opening **4**, and to intuitively deduce that when the pouring indicator **31** carries out a movement overall directly upwardly, it is possible to pour the beverage contained in the chamber **3** through the pouring member **9**.

[0043] In the illustrated embodiment, the actuating mechanism **50** (FIG. **2**) permitting connecting the check valve **40** and the pouring indicator **31** to the pouring control **30**, comprises a first lever **35**, a second lever **45** and a resilient member **55** which, as will be detailed hereafter, permits returning the pouring indicator **31** resiliently toward its closing position when the pouring control **30** is not actuated, so that the pouring indicator does not remain blocked in its so-called opening position when the check valve **40** is in the closed position.

[0044] The first lever **35** extends longitudinally between a first end forming the pouring control **30** and a second end constituted by the arm **32** supporting the pouring indicator **31**. The first lever **35** has a pivotal axle **36** supported by bearings **17***c* formed integrally with the bottom **17***b* of the cover.

[0045] The pivoting axle **36** is transverse to the first lever **35**. It will also be noted that it is positioned longitudinally nearer the pouring control **30** than the pouring indicator **31**, such that when said control **30** is actuated, which is to say depressed by a finger of the user from the position shown in FIGS. **1** and **3** in which it is flush with the handle, to an actuated position shown in FIG. **4**, the pouring indicator **31** carries out an amplified movement relative to the pouring control **30**, and as a result, it is quite visible. By way of example, in the illustrated embodiment, depressing the pouring control **30** by the amount of 2 mm gives rise to a vertical movement of the pouring indicator **31** of about 8 mm.

[0046] On the other hand, the lever **35** whose axle **36** extends in a horizontal plane when the receptacle **1** is on its bottom **12***a*, is balanced on opposite sides of the axle **36** such that beyond any urging of the latter, the pouring indicator **31** remains in the closing position. This balancing is obtained by a higher weight of the lever portion **35** extending from the axle **36** toward the pouring indicator **31**, than the portion extending from the axle **36** toward the pouring control **30**, such that in the equilibrium position, the pouring indicator **31** remains in the lower closing position.

[0047] The second lever **45** has a first end constituted by a pivoting axle **46** parallel to the pivoting axle **36** of the first lever **35**, and is secured to the arm **42** of the check valve **40** at its second end. The pivoting axle **46** is supported by bearings **17***d* formed integrally with the bottom **17***b* of the cover **5**.

[0048] The resilient member **55**, formed here by a coil compression spring, is disposed between the bottom **17***b* of the cover and a second lever **45**, such that it resiliently urges the lever **45** toward an upper position in which the check valve **40** occupies its closed position.

[0049] The first lever **35** is arranged above the second lever **45** and their respective pivotal axles (**36**, **46**) are horizontally offset, such that the portion of the first lever **35** extending between the axle **36** and the pouring control **30** is located above a portion of the second lever **45**. The first lever **35** has in this portion a finger **37** adapted to come into contact against the second lever **45**. This bearing of the finger **37** permits simultaneously, following the actuation of the pouring control **30**, to lower the second lever **45**, hence to place the check valve **40** in open position and to raise the first lever **35**, thus to place the pouring indicator **31** in the opening position, as will be apparent from FIG. **4**. The actuating mechanism **50** thus provided with pivoting levers coacting in bearing relationship is less cumbersome to make, the pouring indicator **31** being formed by simple prolongation of the first lever **35**. Moreover, the vertical size of this actual mechanism **50** is reduced, which permits having a cover **5** of low height.

[0050] The cover **5** comprises, in the embodiment shown in which the pouring receptacle **1** is adapted for a coffeemaker, a filling means **60** having an upper dome **61** and a vertical tubular portion **61** which opens at an upper end in the center of the dome **61** and at a lower end within the cover **5**. The filling means **60** is slidably mounted along the central axis Z (FIG. **2**) through a cylindrical guide **18***b* on the upper surface **18** of the cover and concentric to this latter. The amplitude of sliding of the filling means **60** is limited by a cup **18***c* formed by the upper surface **18** of the cover **5**, said dome **61** at the end of the path of movement coming into abutment against the bottom of the cup **18***c*. The tubular portion **62** of the filling means **60** extends within the cover through an opening **39** of the first lever **35**, such that the filling means does not interfere with this first lever. This tubular portion **62** has, adjacent its lower end, a shoulder **64** against which bears the periphery of an opening **49** formed in the second lever **45** when the check valve is in its closed position, as can be seen in FIG. **3**.

[0051] When the filling means **60** is actuated, which is to say moved downwardly from the rest position shown in FIG. **3** to the position shown in FIG. **5**, the shoulder **64** moves downwardly the second lever **45** and thus places this latter into a lower position in which the check valve **40** is in the open position. A liquid poured from the upper outlet of the tubular portion **62**, which has the shape of a cap, thus flows through this tubular portion, onto the bottom **17***b* of the cover which is preferably inclined and provided with the rib **29** in the arc of a circle (FIG. **2**), then toward the chamber **3** through the first outlet **25** formed in the cover **5**.

[0052] The filling means **60** thus provided permits filling the isothermal receptacle **1** when it is used with a coffeemaker provided with an actuating member **70**, shown in FIG. **5**, whilst maintaining the cover **5** in position on the body **2**, and as a result, by limiting the loss of heat in the course of the preparation of the beverage.

[0053] The actuating member **70** of the coffeemaker has a cylindrical shape with a bulbous lower end **71** adapted to coact by sliding contact with the dome **61** of the filling means **60** when the receptacle **1** is in place in the coffeemaker.

[0054] The actuating member **70** has a conduit **72** through which flows the infused beverage and which opens in the center of the end **71** so as to come into correspondence with the upper outlet of the filling means **60**.

[0055] When the user wishes to pour the liquid contained in the chamber **3**, he grasps the handle **8** of the receptacle and actuates with the thumb the pouring control **30**, given that the cover **5** is locked on the body **2**. The actuation of the pouring control **30** gives rise to swinging of the first lever **35** from the position shown in FIG. **3** to the position shown in FIG. **4**. The pouring indicator **31** then carries out a movement through the arc of a circle, directed upwardly, such that it takes the projecting and easily visible position shown in FIG. **4**. Simultaneously the swinging of the first lever **35** causes, by means of the finger **37**, a downward swinging of the second lever **45** by compressing the resilient member **55**, and thus the check valve **40** takes its open position shown in FIG. **4**. The user can visually determine, thanks to the projecting position of the pouring indicator **31**, that the chamber **3** is in communication with the pouring member **9** even he cannot see that the check valve **40** is in the open position. The user then carries out a pouring movement by inclining the receptacle in a more natural manner than in the absence of a visual indication.

[0056] When the user releases the pressure exerted on the pouring control **30**, this latter returns to the inactive position under the action of the resilient member **55**, the check valve **40** and the pouring indicator **31** return respectively to their closed and closing position shown in FIG. **3**.

[0057] For the preparation of coffee, the user places in the usual manner the pouring receptacle **1** in the coffeemaker, which is to say generally on a base of the coffeemaker and below the conduit **70** for the outlet of coffee. The filling means **60** of the pouring receptacle thus coacts with the control member **70** secured to the coffeemaker, which has the result of lowering the filling means **60**, and hence to open the check valve **40**, as shown in FIG. **5**. The coffee flows through the outlet conduit **72** and then passes through the tubular portion **62** of the filling means **60**, the bottom **17***b* of the cover **5**, and the outlet **25** to fill the chamber **3** of the receptacle.

[0058] It will be noted that this operation is automatic, which is to say that it does not require any manipulation by the user. As a result, it is necessary for this configuration of filling only that the user be notified that the first outlet **25** of the cover **5** is in communication with the chamber **3**; on the contrary, such a notice could give rise to an erroneous interpretation of the function of the filling indicator **31** and even be detrimental because of the free space necessary for the pouring indicator **31** to project, as shown in FIG. **4**. The illustrated embodiment permits fulfilling this function thanks to the possible decoupling between the movements of swinging of the first and second levers (**35**, **45**). Thus, as can be seen in FIG. **5**, when the filling means **60** is actuated, the second lever **45** is no longer in contact with the finger **37** of the first lever **35** which, because of its balancing, remains naturally in the inactive position, which is to say with the pouring indicator **31** in the closing position.

[0059] In the illustrated embodiment, the actuating mechanism **50** is provided with the help of pivoting levers, which has the advantage particularly to reduce the size of the mechanism and its cost of production, but of course, the present invention does not exclude the use of any other type of mechanism fulfilling the opening functions of the check valve **40** and for movement of the pouring indicator **31**, as such as for example mechanisms having sectors and toothed wheels coacting together. Similarly, the pouring control **30** and the assembly of actuating mechanism **50** are connected to the cover. However, it is perfectly envisagable that the pouring control **30** and/or a portion of the actuating mechanism **50** be connected to the body **2** of the receptacle.

1. Pouring receptacle comprising:

a body (**2**) comprising a pouring member (**9**) and an upper opening (**4**), and defining a chamber (**3**) adapted to contain a liquid;

a cover (**5**) adapted to close the opening, and comprising a check valve (**40**) internal to the chamber and a conduit (**24**) ensuring fluid communication from the chamber (**3**) to the pouring member (**9**) through a first (**25**) and a second (**26**) outlet, said check valve (**40**) being movable between a closed position in which it closes said conduit and an open position in which it permits communication between the first (**25**) and second (**26**) outlets of the cover; and

a pouring control (**30**) connected to said check valve (**40**) by an actuating mechanism (**50**) adapted to place said check valve in the open position when the pouring control is actuated, characterized in that the cover (**5**) comprises moreover a pouring indicator (**31**) connected to the pouring control (**30**) and movable between a so-called closing position and a so-called opening position in which it projects outside the receptacle when the pouring control (**30**) is actuated.

2. Pouring receptacle according to claim 1, in which the pouring indicator (**31**) is a plate carried by an arm (**32**) connected to the pouring control (**30**) and projecting outside the cover (**5**) through the second outlet (**26**).

3. Pouring receptacle according to claim 1, in which the pouring control (**30**) is returned resiliently toward an inactive position in which the pouring indicator (**31**) occupies its closing position.

4. Pouring receptacle according to claim 1, in which the pouring indicator (**31**) carries out, from its closing position

toward its opening position, an overall upwardly directed movement of an amplitude such that the pouring indicator will project beyond the upper surface (**18**) of the cover (**5**).

5. Pouring receptacle according to claim 1, in which the actuating mechanism (**50**) comprises a first lever (**35**) swingably mounted relative to the cover (**5**) about a transverse axle (**36**), and extending longitudinally between a first end secured to the pouring control (**30**) and a second end connected to the pouring indictor (**31**), and a second lever (**35**) having a first end mounted pivotably relative to the cover about an axle (**46**) and a second end secured to the check valve (**40**), said second lever (**45**) being urged by a resilient member (**45**) toward a position in which the check valve (**40**) is in the closed position, and in which the first lever (**35**) has a finger (**37**) adapted to come into bearing against the second lever (**45**), said first (**35**) and second (**45**) levers being arranged relative to each other such that the actuation of the pouring control (**30**) brings the check valve (**40**) into open position and the pouring indicator (**31**) into the opening position.

6. Pouring receptacle according to claim 5, in which the swinging axle (**36**) of the first lever (**35**) is positioned longitudinally at a predetermined distance from the pouring control (**3**) so as to amplify the movement of the pouring indicator (**31**) relative to the movement of the pouring control (**30**).

7. Pouring receptacle according to claim 5, in which the swinging axle (**36**) of the first lever (**35**) is located in a substantially horizontal plane, and in which the first lever (**35**) is balanced relative to said axle such that in the equilibrium position, the pouring indicator (**31**) will be disposed in the closing position.

8. Pouring receptacle according to claim 1, in which the cover (**5**) moreover comprises a filling means (**60**) movingly mounted in the cover and adapted to act on the second lever (**45**) so as to bring the check valve (**40**) into the open position upon actuation of said filling means (**60**), the first lever (**35**) having an opening (**39**) through which freely passes said filling means.

9. Infusion apparatus comprising a pouring receptacle according to claim 8, in which the infusion apparatus comprises an actuating member (**70**) provided with an outlet (**72**) for infused beverage and adapted to actuate the filling means (**60**) of the pouring receptacle when this latter is correctly positioned relative to said outlet (**72**).

10. Pouring receptacle according to claim 2, in which the pouring control (**30**) is returned resiliently toward an inactive position in which the pouring indicator (**31**) occupies its closing position.

11. Pouring receptacle according to claim 6, in which the swinging axle (**36**) of the first lever (**35**) is located in a substantially horizontal plane, and in which the first lever (**35**) is balanced relative to said axle such that in the equilibrium position, the pouring indicator (**31**) will be disposed in the closing position.

* * * * *