US009800283B2

(12) **United States Patent**
**Schmidt**

(10) **Patent No.: US 9,800,283 B2**
(45) **Date of Patent: *Oct. 24, 2017**

(54) **MOBILE DEVICE HOLDER**

(71) Applicant: **AIRO COLLECTIVE, INC.**, Elk Grove, CA (US)

(72) Inventor: **Steve Schmidt**, Elk Grove, CA (US)

(73) Assignee: **AIRO COLLECTIVE, INC.**, Elk Grove

( * ) Notice: Subject to any disclaimer, the term of this patent is extended or adjusted under 35 U.S.C. 154(b) by 0 days.

This patent is subject to a terminal disclaimer.

(21) Appl. No.: **15/157,744**

(22) Filed: **May 18, 2016**

(65) **Prior Publication Data**

US 2016/0373152 A1 Dec. 22, 2016

**Related U.S. Application Data**

(63) Continuation of application No. 14/741,960, filed on Jun. 17, 2015, now Pat. No. 9,397,719.

(51) **Int. Cl.**
***H04M 1/02*** (2006.01)
***H04B 1/3877*** (2015.01)
(Continued)

(52) **U.S. Cl.**
CPC ..... ***H04B 1/3877*** (2013.01); ***A45C 11/00*** (2013.01); ***A45C 13/1069*** (2013.01);
(Continued)

(58) **Field of Classification Search**
CPC ... H04W 88/02; H04W 88/04; H04W 1/3888; H04B 1/04; H04B 1/3877; F16M 13/02;
(Continued)

(56) **References Cited**

U.S. PATENT DOCUMENTS

2002/0139822 A1 10/2002 Infanti
2013/0303000 A1 11/2013 Witter et al.
(Continued)

FOREIGN PATENT DOCUMENTS

CA 2912329 A1 11/2014

OTHER PUBLICATIONS

International Search Report & Written Opinion dated Aug. 29, 2016 from corresponding International PCT Patent Application No. PCT/US2016/036508, 10 pages.

*Primary Examiner* — Thanh Le
(74) *Attorney, Agent, or Firm* — Innovation Capital Law Group, LLP; Vic Lin

(57) **ABSTRACT**

A two-piece mobile device holder having a case assembly and a mounting assembly is disclosed. The case assembly is configured to receive and secure a mobile device such as a smart phone. The mounting assembly is configured to be detachably coupled to other objects. Sets of permanent magnets are arranged in a circular pattern in the case assembly and the mounting assembly. The magnets in both the first and second set of magnets are arranged with alternating magnetic polarity. As the case assembly is placed on top of the mounting assembly, the magnets in the mounting assembly will attract magnets with opposite polarities in the case assembly. A user may detach the case assembly from the mounting assembly by rotating the case assembly such that the magnets in the case assembly are now adjacent to magnets in the mounting assembly of the same polarity.

**18 Claims, 21 Drawing Sheets**

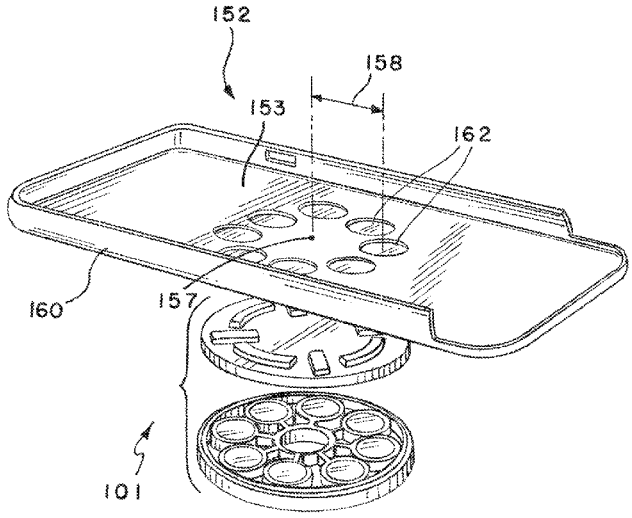

(51) **Int. Cl.**

| | |
|---|---|
| ***H04B 1/3888*** | (2015.01) |
| ***F16M 13/02*** | (2006.01) |
| ***F16M 11/38*** | (2006.01) |
| ***B60R 11/02*** | (2006.01) |
| ***F16M 11/22*** | (2006.01) |
| ***A45F 5/02*** | (2006.01) |
| ***F16M 11/24*** | (2006.01) |
| ***A45C 11/00*** | (2006.01) |
| ***A45C 13/10*** | (2006.01) |
| *F16B 1/00* | (2006.01) |
| *B60R 11/00* | (2006.01) |
| *A45F 5/00* | (2006.01) |
| *A45F 5/10* | (2006.01) |
| *A45C 13/02* | (2006.01) |

(52) **U.S. Cl.**

CPC ..... ***A45F 5/021*** (2013.01); ***B60R 11/02*** (2013.01); ***F16M 11/22*** (2013.01); ***F16M 11/242*** (2013.01); ***F16M 11/38*** (2013.01); ***F16M 13/02*** (2013.01); ***H04B 1/3888*** (2013.01); *A45C 2011/002* (2013.01); *A45C 2011/003* (2013.01); *A45C 2013/025* (2013.01); *A45C 2200/15* (2013.01); *A45F 2005/008* (2013.01); *A45F 2005/1006* (2013.01); *A45F 2200/0516* (2013.01); *A45F 2200/0525* (2013.01); *B60R 2011/0005* (2013.01); *B60R 2011/007* (2013.01); *B60R 2011/0008* (2013.01); *B60R 2011/0035* (2013.01); *B60R 2011/0078* (2013.01); *F16B 2001/0035* (2013.01)

(58) **Field of Classification Search**

CPC . F16M 11/041; A45F 5/00; A45F 5/02; F16B 1/00; F16B 11/22; F16B 11/24

See application file for complete search history.

(56) **References Cited**

U.S. PATENT DOCUMENTS

| | | | | |
|---|---|---|---|---|
| 2014/0265765 | A1 | 9/2014 | Khodapanah et al. | |
| 2014/0355200 | A1* | 12/2014 | Thiers | H04W 88/02 361/679.41 |
| 2016/0040825 | A1* | 2/2016 | Franklin | F16M 13/02 439/39 |

* cited by examiner

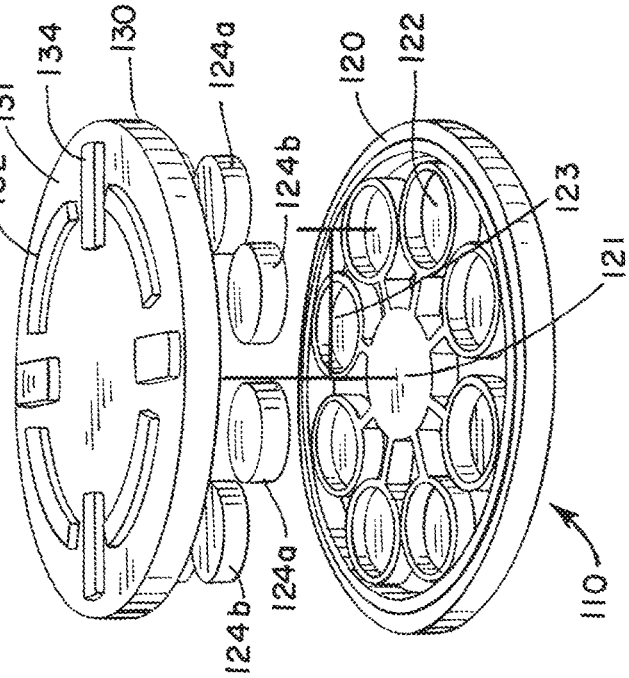
132
131
134
130
124a
124b
124b
124a
120
122
123
121
110

FIG. 2

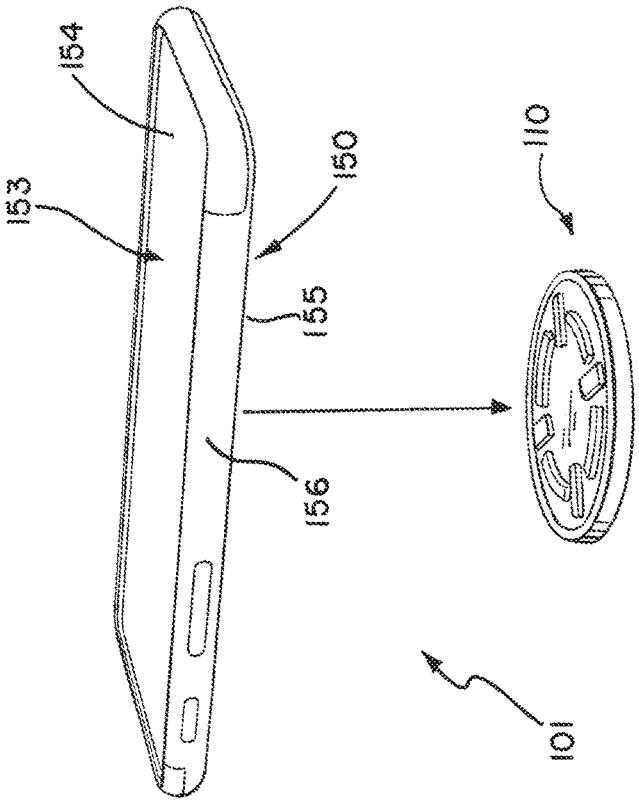
154
153
150
155
156
110
101

FIG. 1

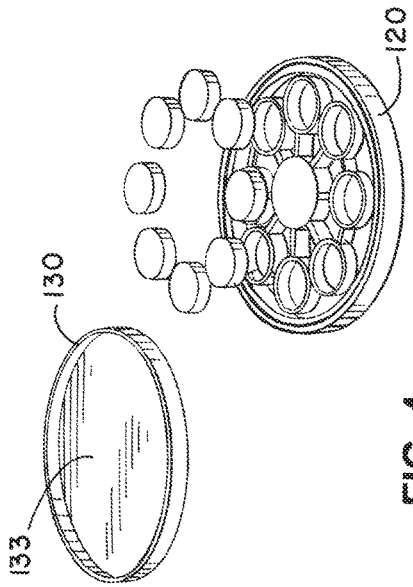


FIG. 4

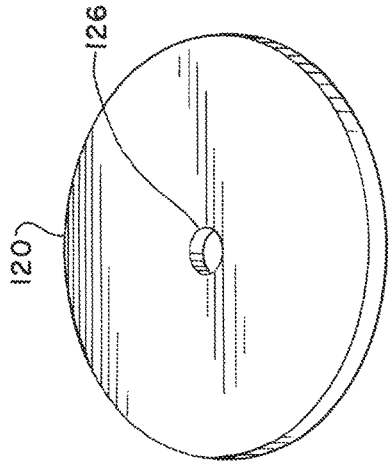


FIG. 5

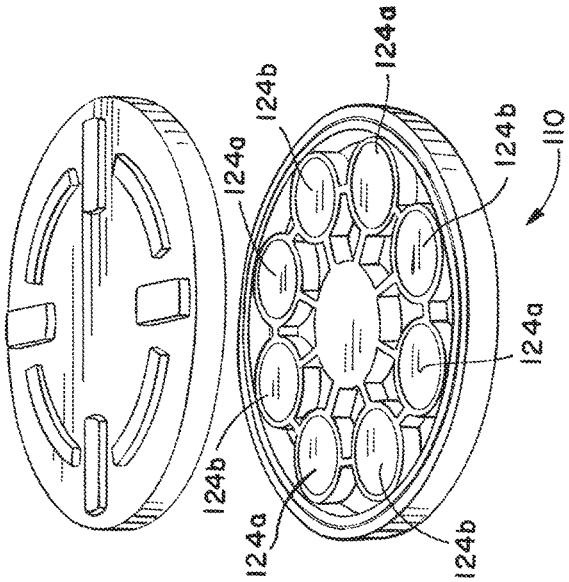


FIG. 3

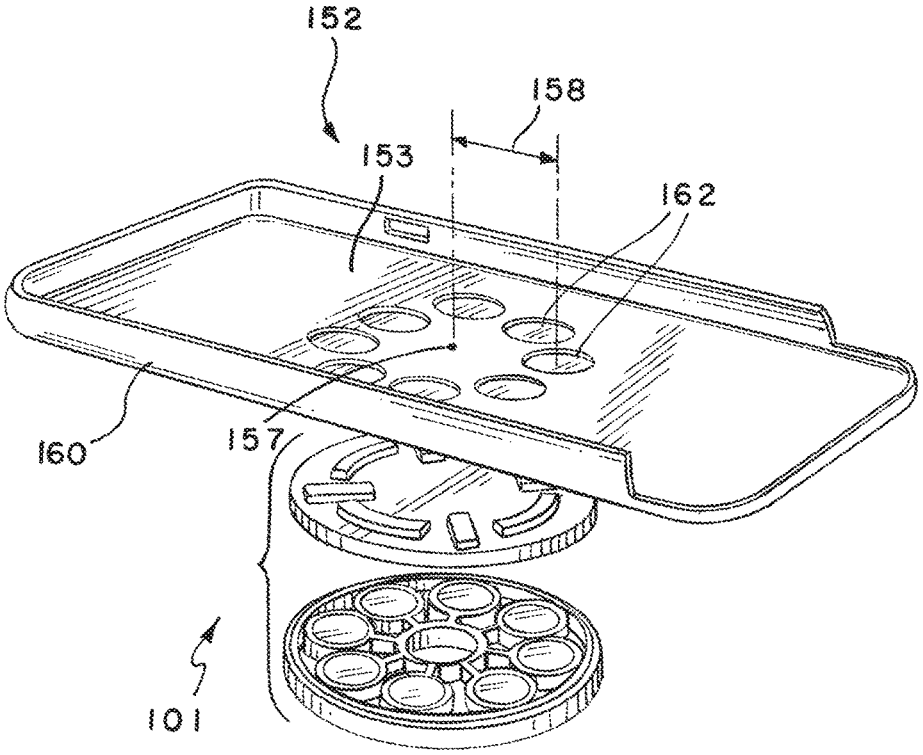
152
158
153
162
160
157
101

FIG. 6

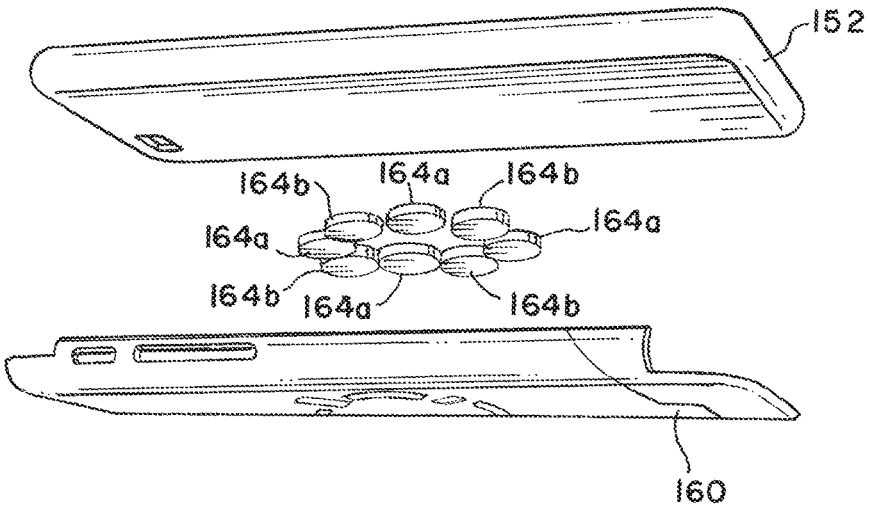
152
164b
164a
164b
164a
164a
164b
164a
164b
160

FIG. 7

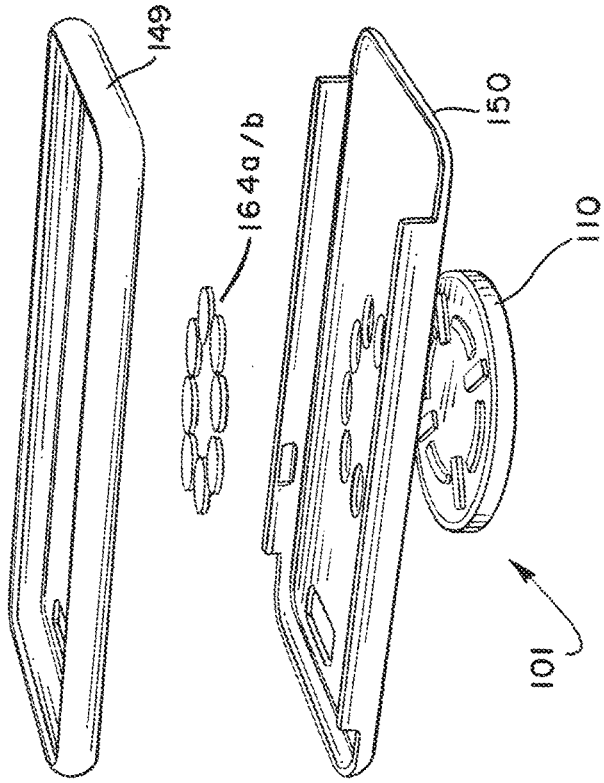


FIG. 9

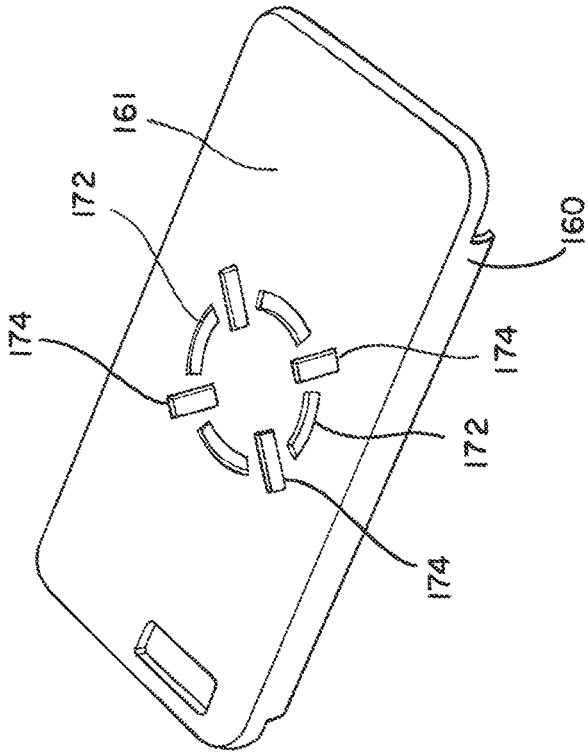


FIG. 8

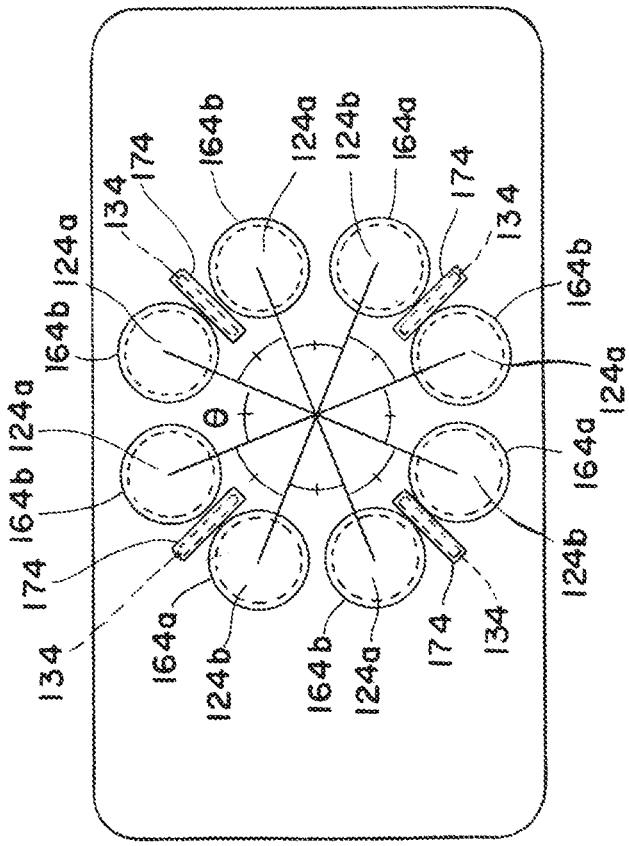


FIG. 11

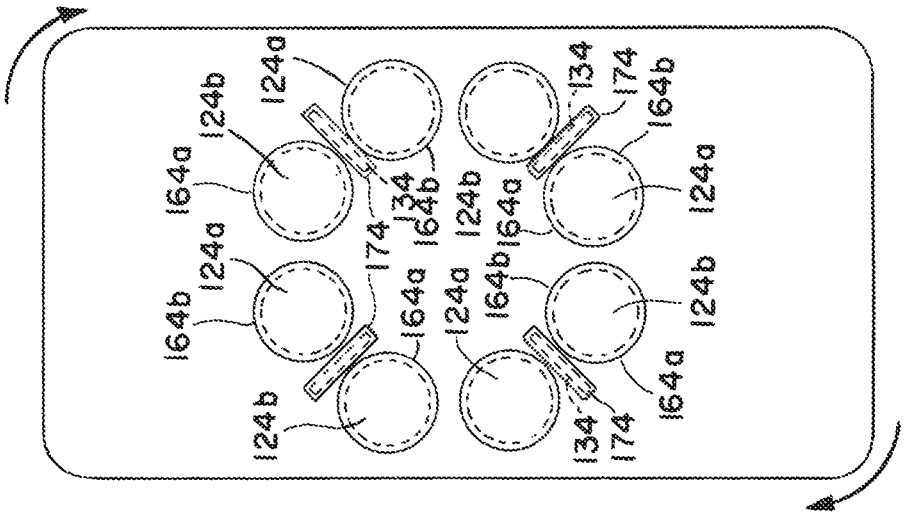


FIG. 10

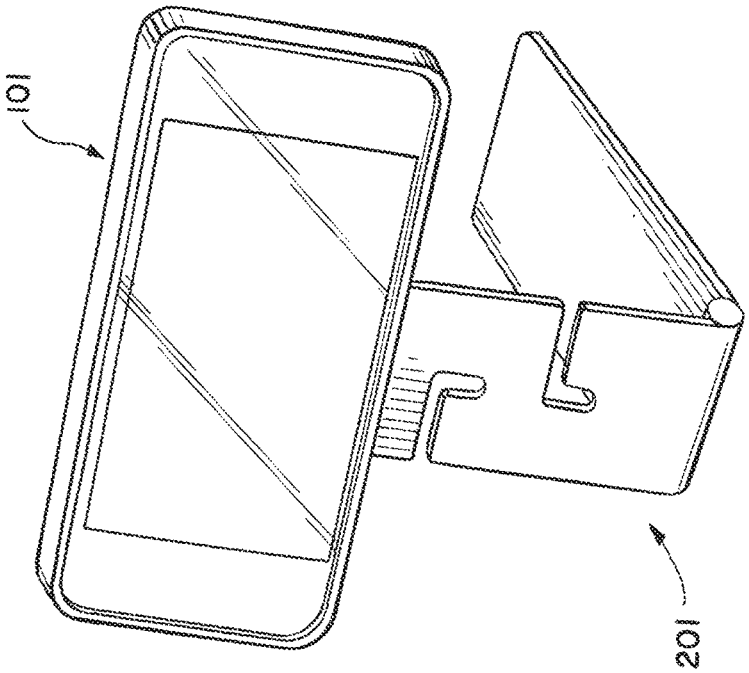


FIG. 13

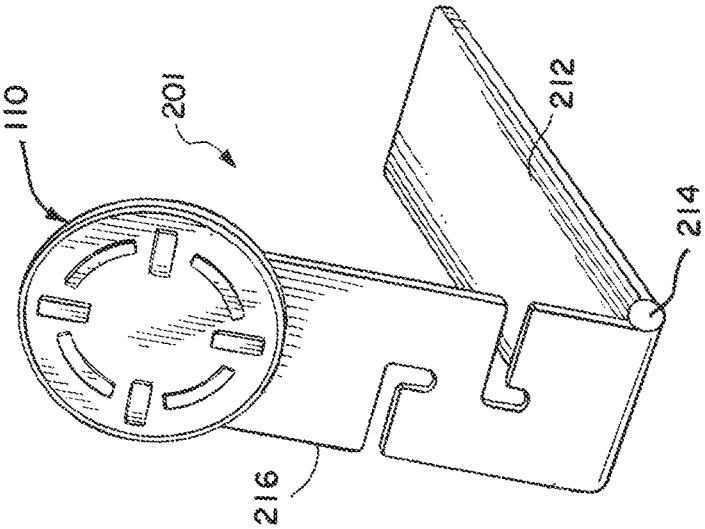


FIG. 12

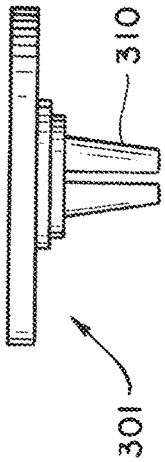


FIG. 14

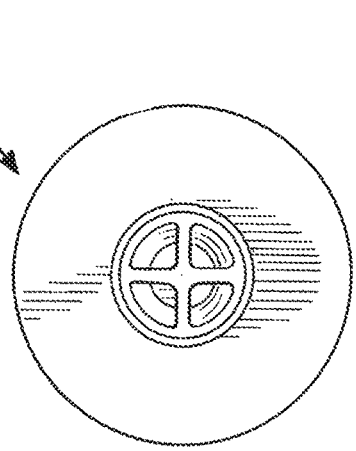


FIG. 15

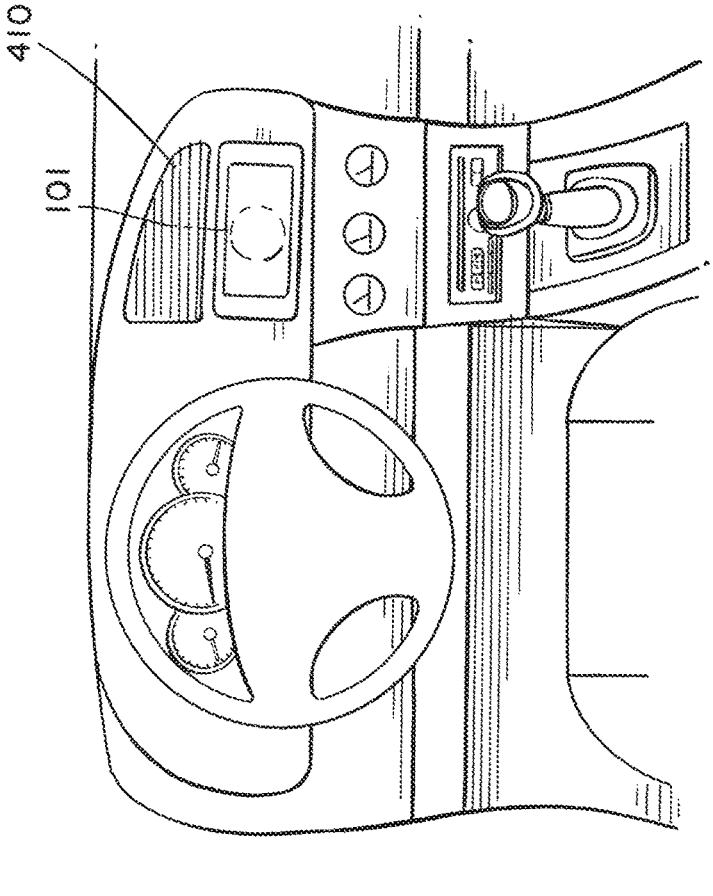


FIG. 16

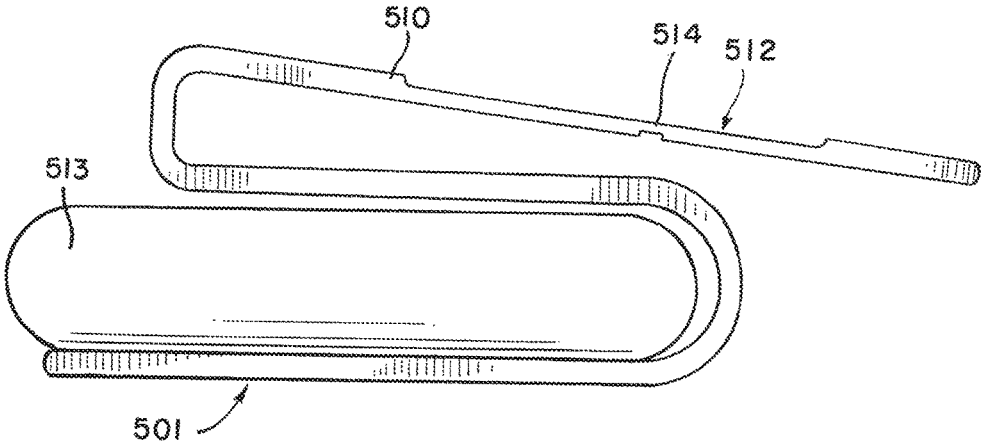


FIG. 17

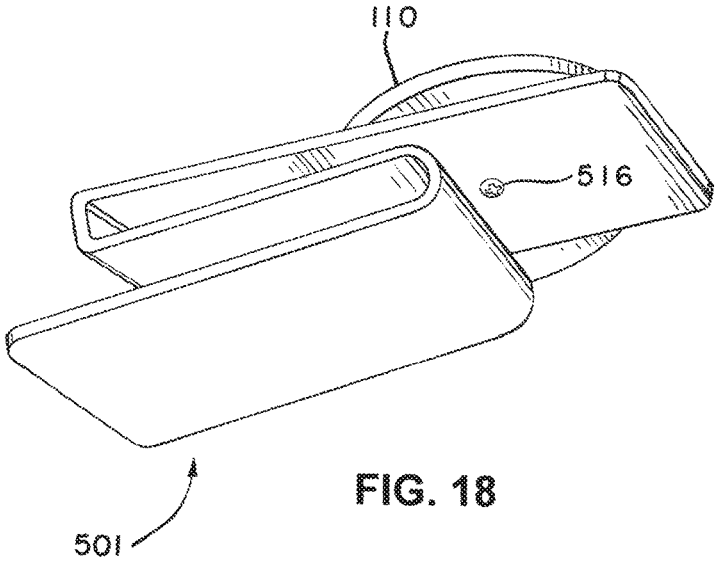


FIG. 18

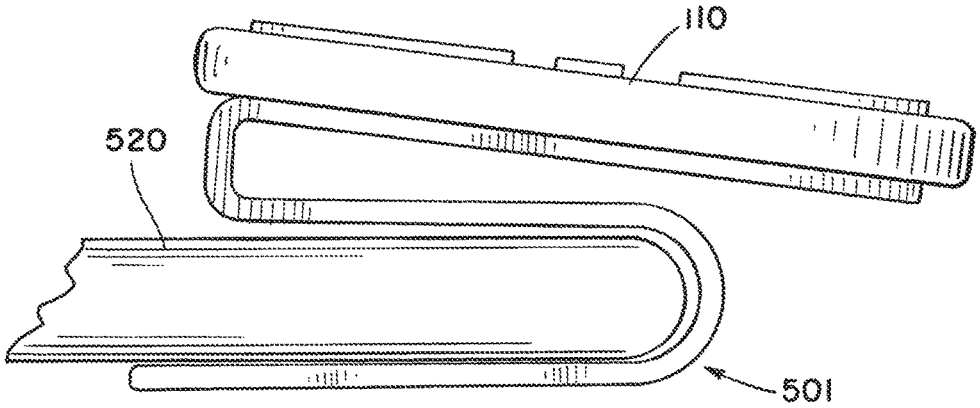


FIG. 19

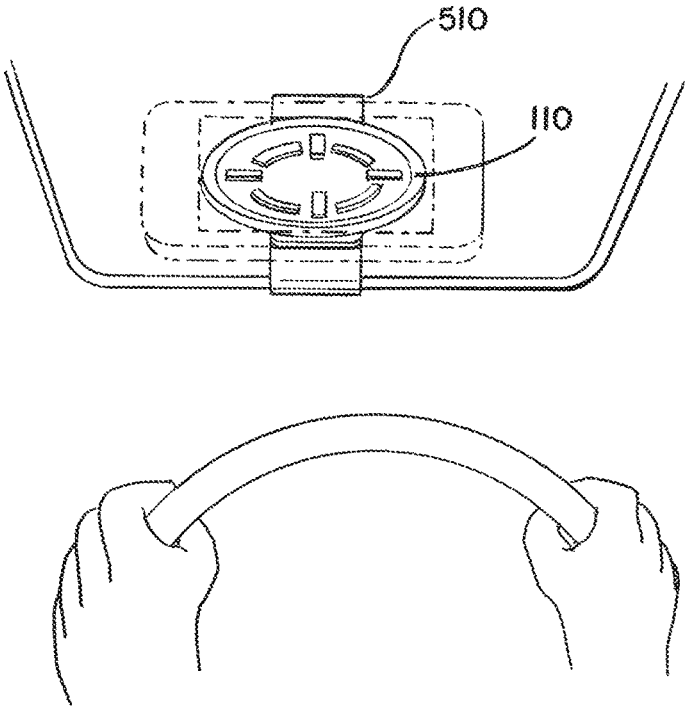


FIG. 20

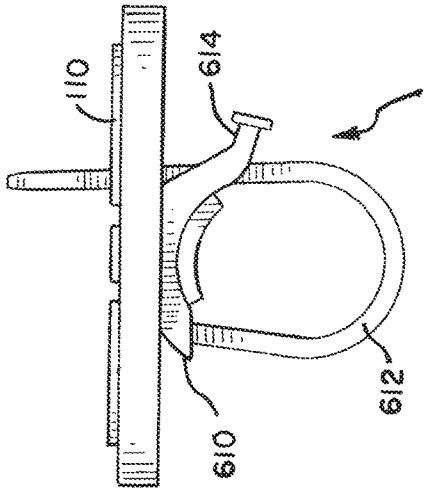


FIG. 21

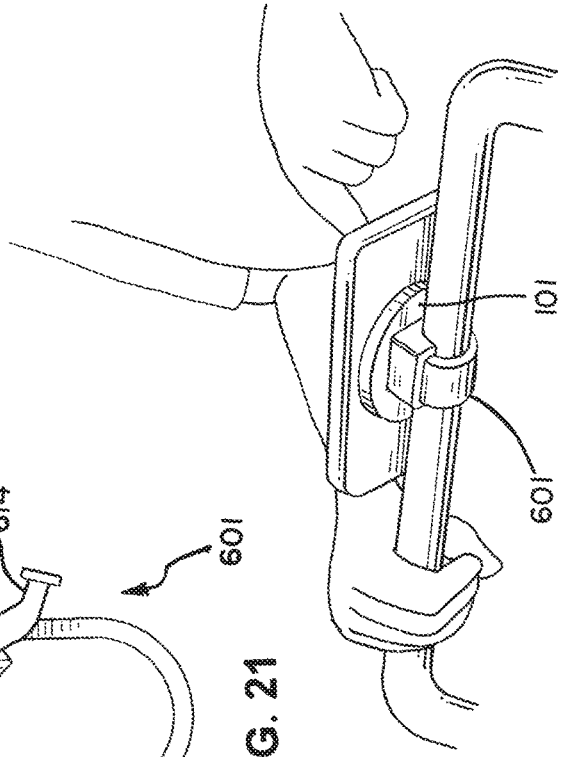


FIG. 23

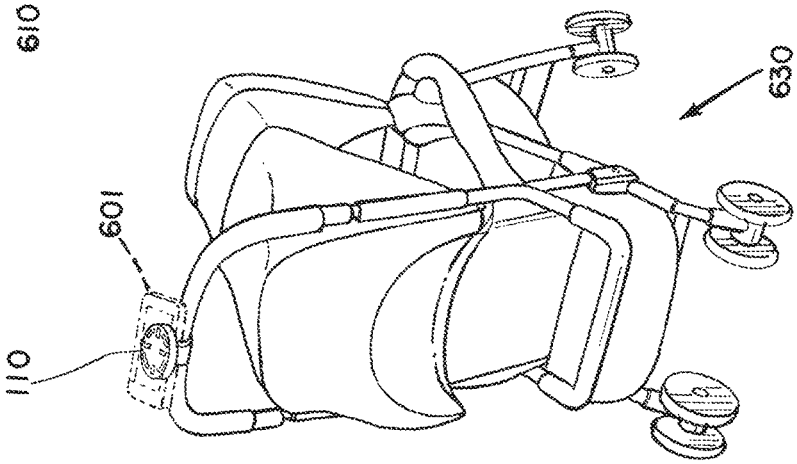


FIG. 22

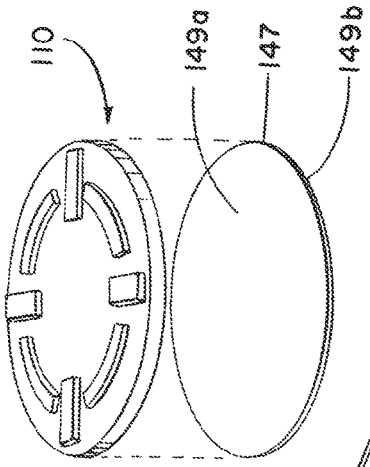


FIG. 25a

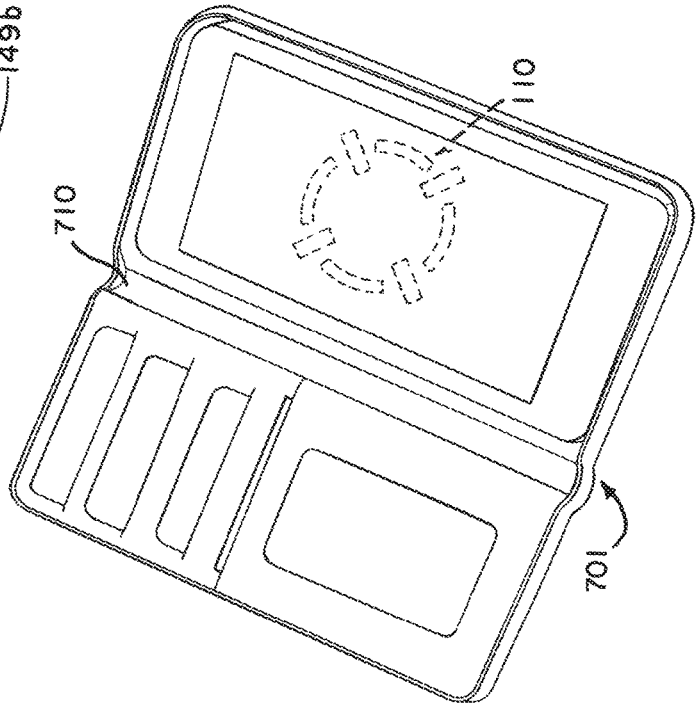


FIG. 25b

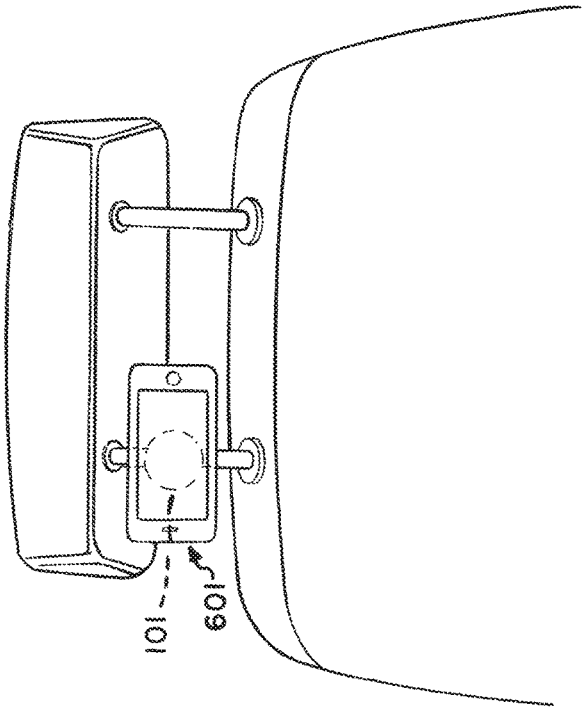


FIG. 24

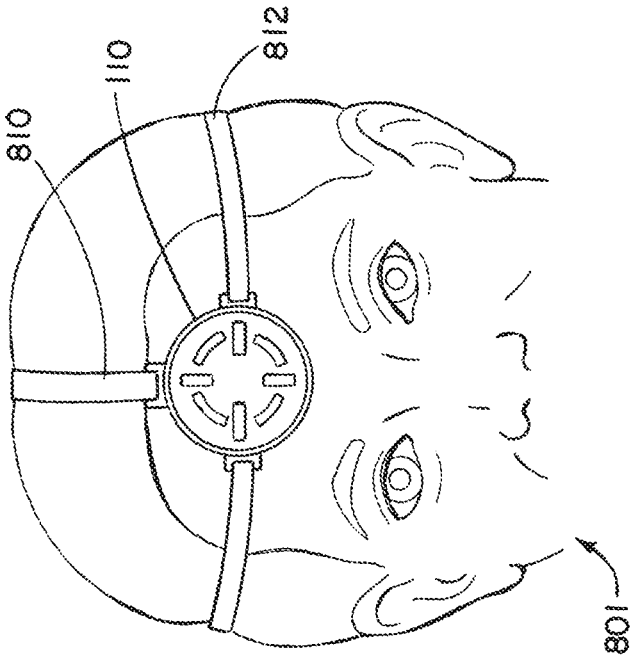


FIG. 26

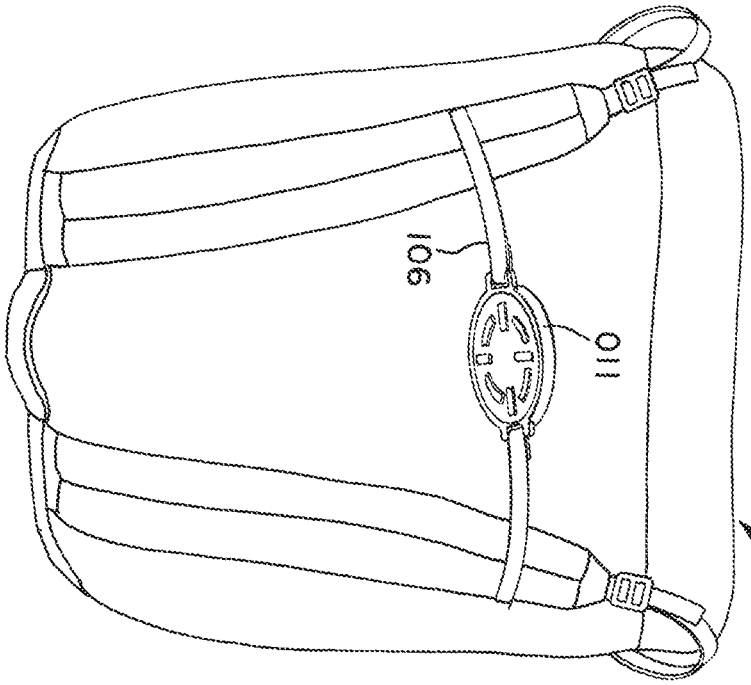


FIG. 27

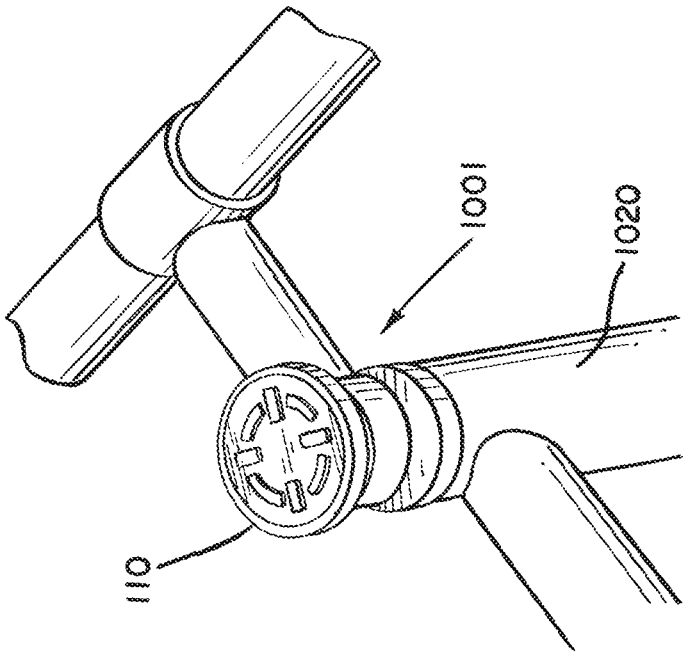


FIG. 29

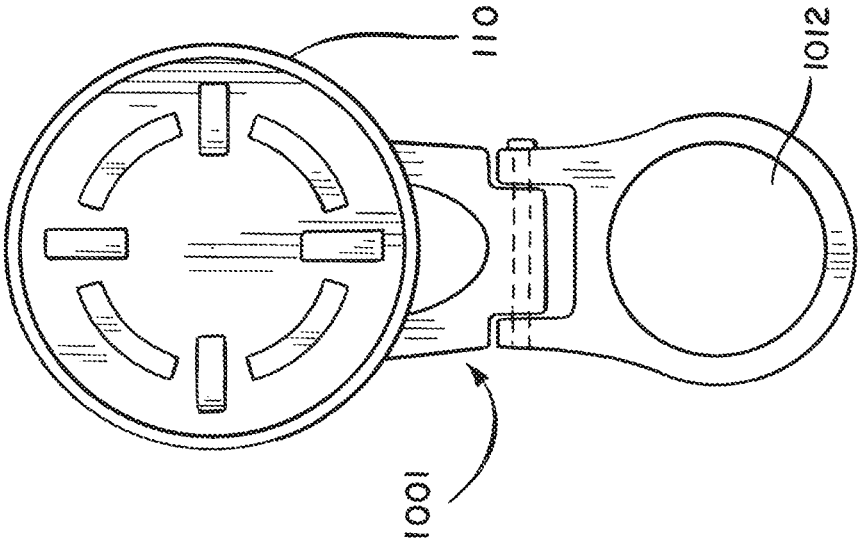


FIG. 28

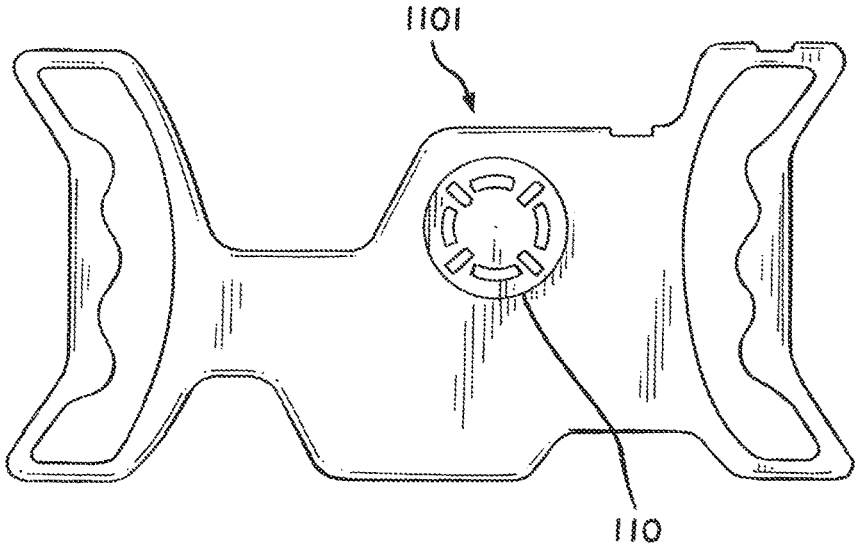


FIG. 30

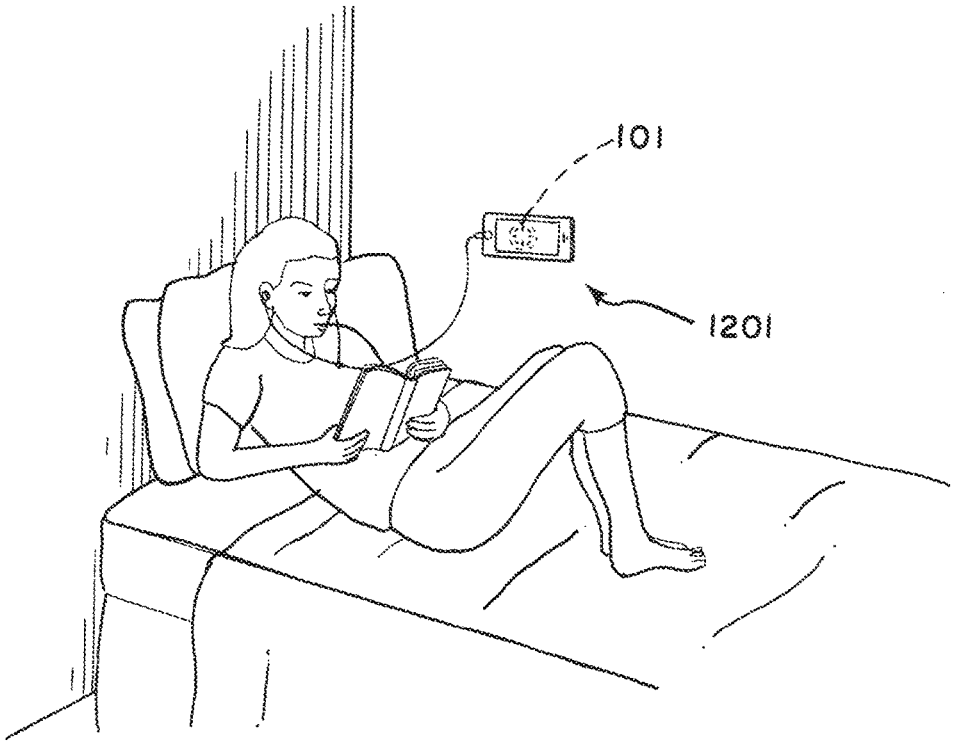


FIG. 31

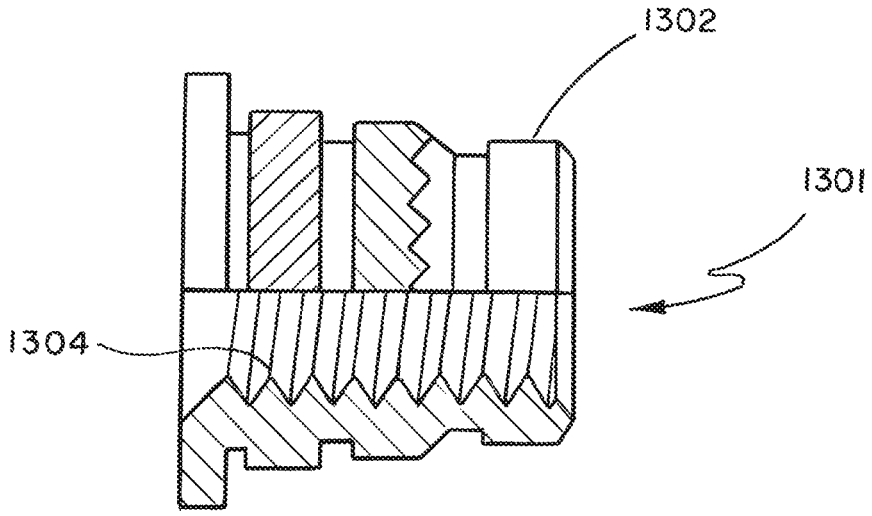


FIG. 32

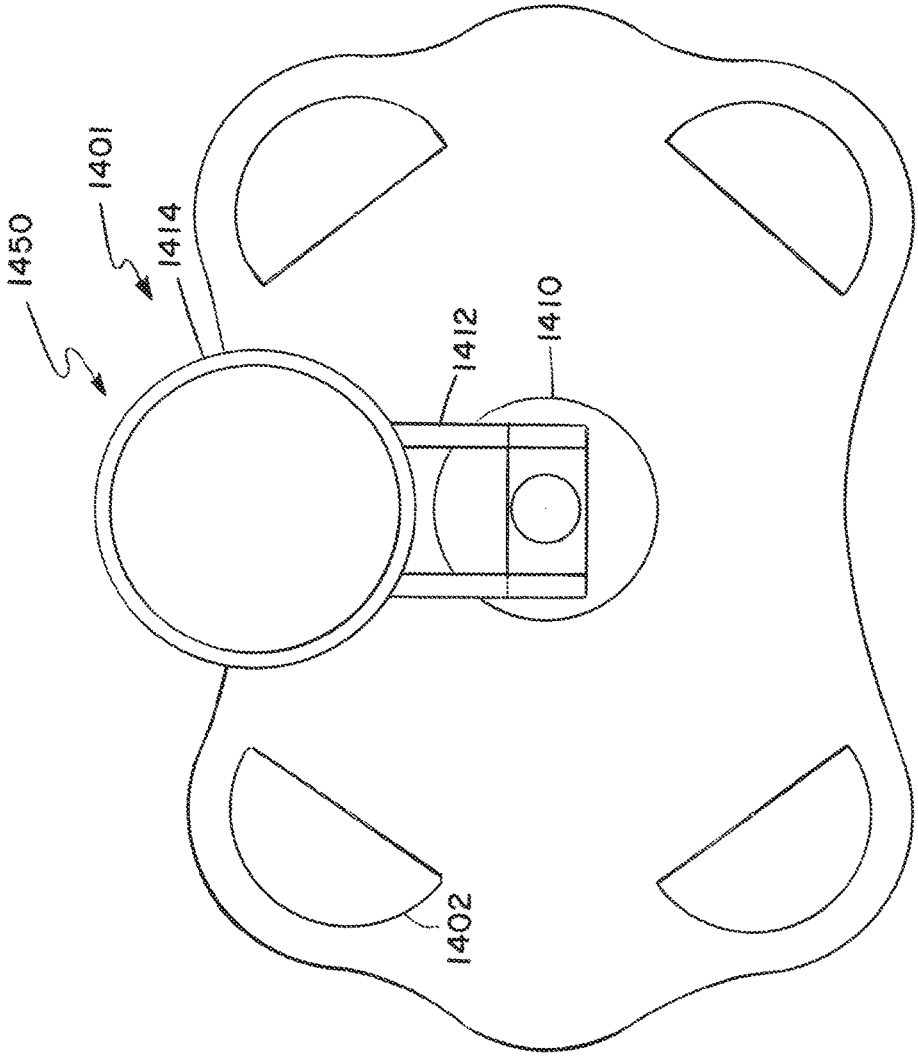


FIG. 33

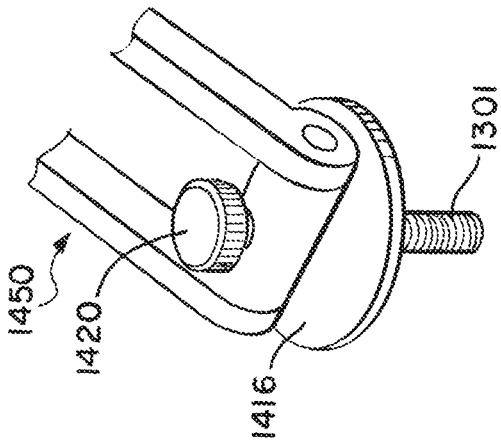


FIG. 36

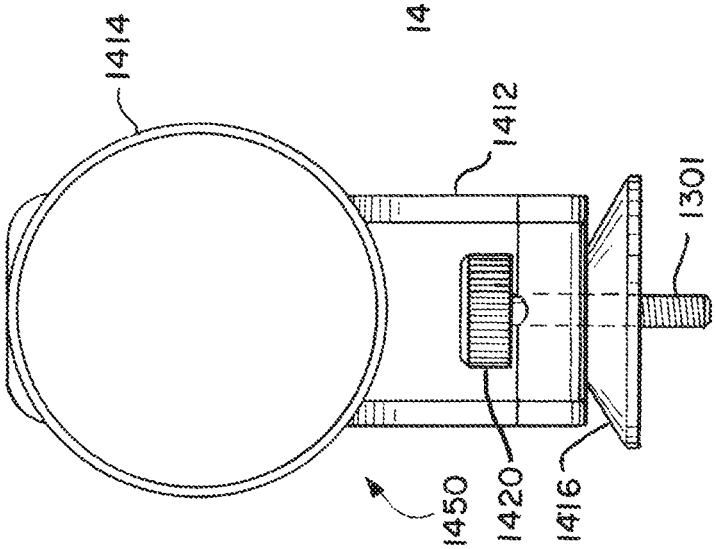


FIG. 34

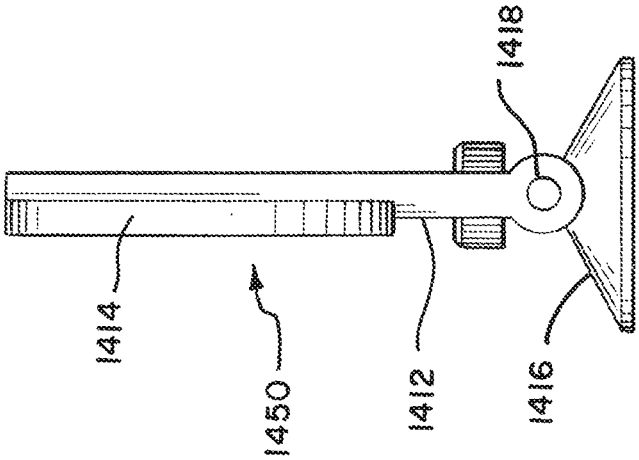


FIG. 35

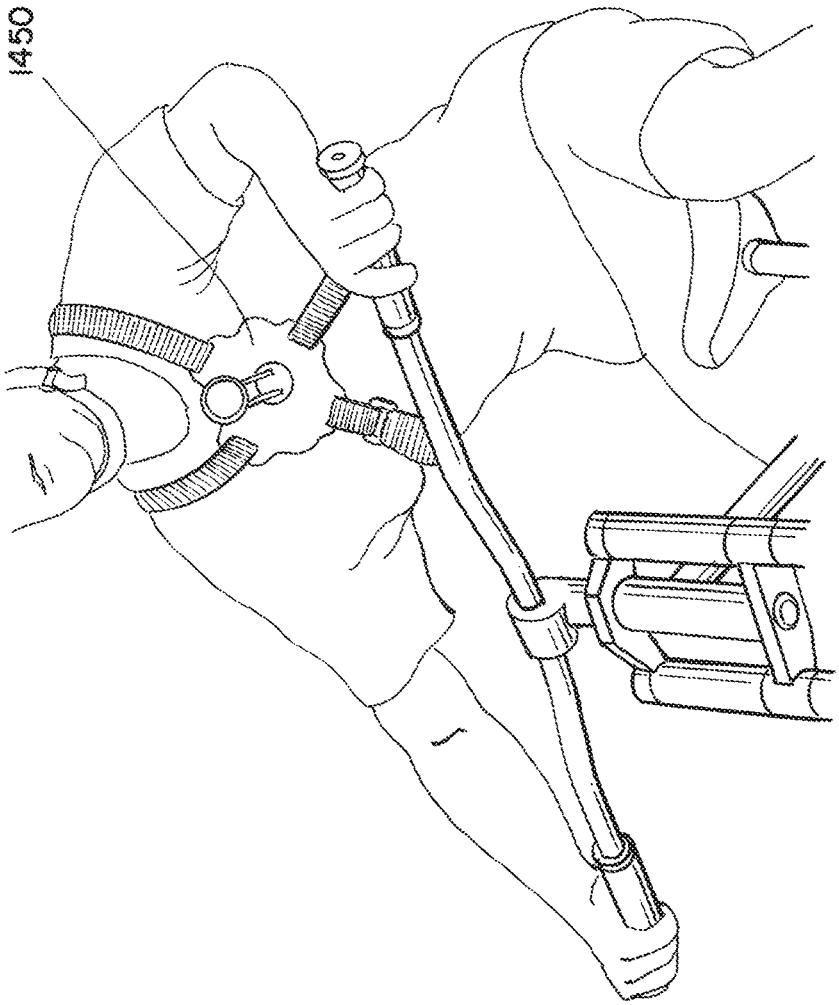


FIG. 37

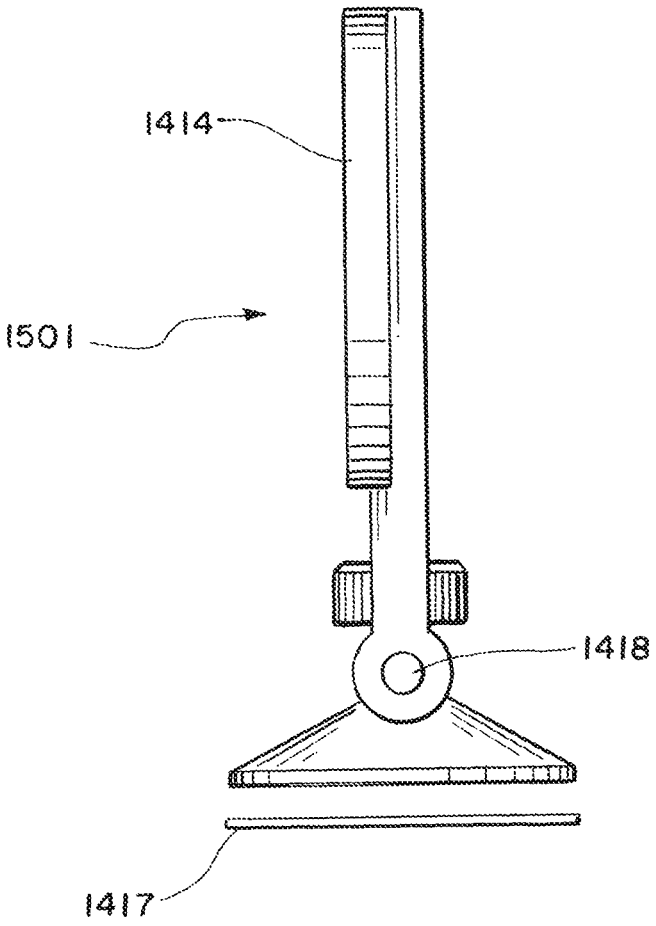


FIG. 38

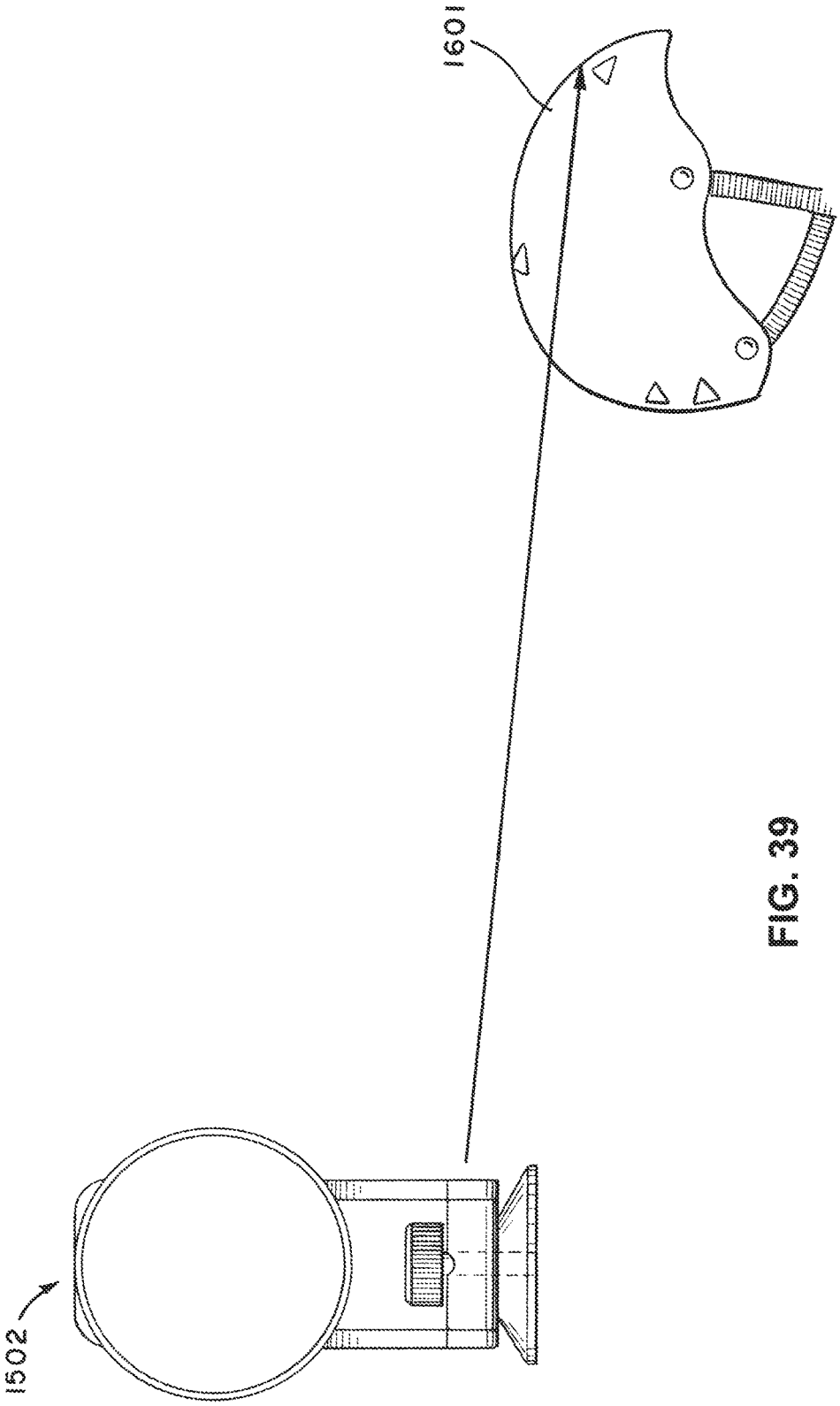


FIG. 39

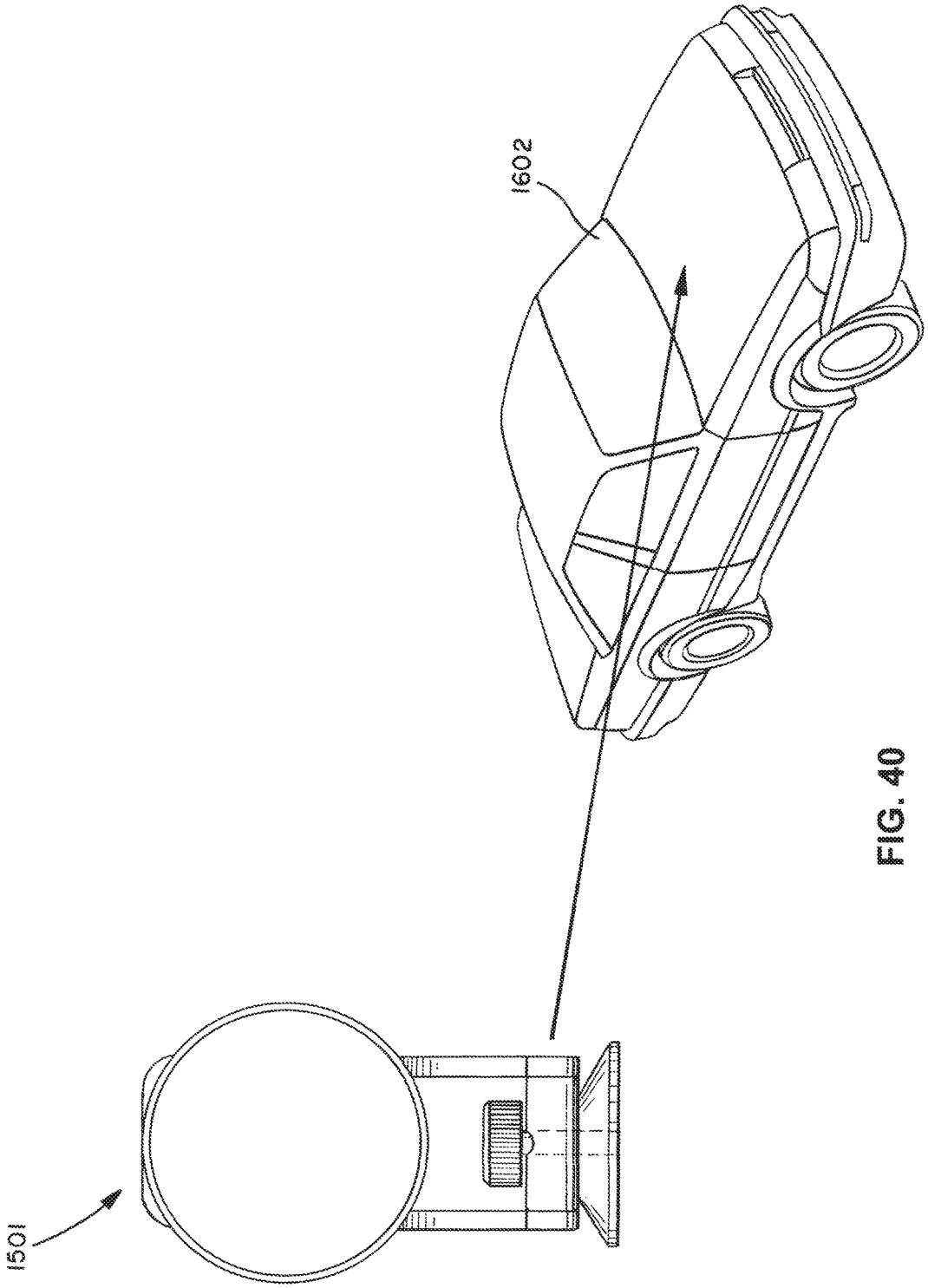


FIG. 40

# MOBILE DEVICE HOLDER

## CROSS-REFERENCE TO RELATED APPLICATION

This application claims benefit under 35 U.S.C. §119(e) of U.S. Non-Provisional application having Ser. No. 14/741,960 filed Jun. 17, 2015, which is hereby incorporated by reference herein in its entirety.

## BACKGROUND OF THE INVENTION

1. Field of the Invention

The present invention relates in general to mobile device holders for mobile electronic devices. More particularly, the invention is directed to mobile device holders employing magnets as the coupling mechanism.

2. Description of the Related Art

Many consumers rely on mobile electronic devices for telephony, Internet access, audio, video, navigation, and entertainment. While the devices are readily carried in pockets or purses, there are many activities in which consumers prefer to mount the mobile electronic devices to other objects. However, conventional mobile device holders may not provide consumers with ready and secure access to their mobile devices. More specifically, existing magnetic mounting systems do not allow for positive location of the device to the mount. They also do not provide for secure attachment to withstand movement or slipping due to vibratory forces or due to more extreme sporting activities.

Accordingly, a need exists to improve the mounting assemblies for mobile devices.

## SUMMARY OF THE INVENTION

In the first aspect, a mobile device holder is disclosed. The mobile device holder comprises a case assembly comprising a case defining a cavity. The cavity has a generally flat inner surface and an outer surface opposite the inner surface. The cavity is configured to receive a mobile electronic device. A first plurality of magnets is coupled to the case. Each of the first plurality of magnets spaced is apart equally circumferentially and spaced apart radially by a fixed radius from a first center of the first plurality of magnets. The mobile device holder also comprises a mounting assembly comprising a mounting base detached from and configured to couple to the case assembly. A second plurality of magnets placed on the mounting base. Each of the second plurality of magnets are spaced apart equally circumferentially and spaced apart radially by the fixed radius from a second center of the second plurality of magnets. A mount cap is positioned above and coupled to the mounting base. The mount cap is surrounding the second plurality of magnets. The case assembly magnetically couples to the mounting assembly when the first plurality of magnets of the case are axially aligned with the second plurality of magnets on the mounting base, and the outer surface of the case is placed on the mount cap.

In a first preferred embodiment, the case magnets are arranged with alternating polarity orientation where each of the case magnets has a different magnetic polarity orientation from that of the immediately adjacent case magnets. The base magnets are preferably arranged with alternating polarity orientation such that each of the base magnets has a different magnetic polarity orientation from that of the immediately adjacent base magnets. The case assembly magnetically preferably couples to the mounting assembly when the first center is aligned with the second center and each case magnet is magnetically coupled to a corresponding base magnet. The outer surface of the case preferably further comprises a plurality of first registration members. The mount cap preferably further comprises a top surface, the top surface further comprises a plurality of second registration members. The first registration members of the case preferably engages with the second registration members of the base during the coupling process.



The first registration members preferably comprise a plurality of rectangular shaped registration recesses positioned radially away from the first center. The second registration members preferably comprise a plurality of rectangular shaped registration protrusions positioned radially away from the second center. The first registration recesses preferably receives the first registration protrusions during the coupling process. Each case magnet is preferably positioned angularly equidistant from the immediately adjacent case magnet, and each base magnet is preferably positioned angularly equidistant from the immediately adjacent base magnet. The case assembly preferably rotates about the mounting assembly and detachably couples with the mounting assembly at one or more fixed angles. The mobile device holder preferably further comprises a fixed or foldable hinged stand coupled to the mounting assembly. The mobile device holder preferably further comprises an automobile vent mount device coupled to the mounting assembly. The mobile device holder preferably further comprises an automobile visor clip coupled to the mounting assembly. The mobile device holder preferably further comprises a mount coupled to the mounting assembly, the mount having one or more straps which are configured to detachably couple to another object. The defined flat mounting base preferably can be fixedly secured to a flat surface via mechanical fastener, adhesives, or elastomeric attachment. The defined flat mounting base preferably can be worn by the user by means of a harness, headband, arm band, belt clip, etc. The defined flat mounting base preferably can be detachably secured to or integrated with a handheld pole, where the described base is pivotally attached to a fixed or extendable pole. The defined flat mounting base preferably can be detachably secured to or integrated with a threaded tri-pod mount. The defined flat mounting base preferably can be fixedly Integrated into a wallet, by various means of attachment.

In a second aspect, a mobile device holder is disclosed. The mobile device holder comprises a case assembly configured to receive a mobile electronic device. A first plurality of magnets is coupled to the case assembly. The first plurality of magnets have a same first magnetic pole facing outward from the case assembly. The mobile device holder also comprises a mounting base detached from and configured to couple to the case assembly. A second plurality of magnets is coupled to the mounting base. The second plurality of magnets have a same second magnetic pole facing outward from the mounting base. The case assembly magnetically couples to the mounting assembly when the outer surface of the case assembly is placed on the mounting base and the first magnetic pole of the first plurality of magnets is facing the second magnetic pole of the second plurality of magnets.

In a second preferred embodiment, the case magnets are arranged with alternating polarity orientation where each of the case magnets has a different magnetic polarity orientation from that of the immediately adjacent case magnets. The base magnets are preferably arranged with alternating polarity orientation such that each of the base magnets has

a different magnetic polarity orientation from that of the immediately adjacent base magnets. The case assembly magnetically preferably couples to the mounting assembly when the first center is aligned with the second center and each case magnet is magnetically coupled to a corresponding base magnet. The outer surface of the case further preferably comprises a plurality of first registration members. The mount cap preferably further comprises a top surface, the top surface further comprises a plurality of second registration members. The first registration members of the case preferably engages with the second registration members of the base during the coupling process.

The first registration members preferably comprise a plurality of first rectangular shaped registration recesses positioned radially away from the first center. The second registration members preferably comprise a plurality of first rectangular shaped registration protrusions positioned radially away from the second center. The first registration recesses preferably receives the first registration protrusions during the coupling process. Each case magnet is preferably positioned angularly equidistant from the immediately adjacent case magnet. Each base magnet is preferably positioned angularly equidistant from the immediately adjacent base magnet. The described mounting base preferably can be detachably or fixedly attached to another stationary or mobile mounting surface by means of mechanical fastener, elastomeric attachment, adhesive attachment, or integrated attachment feature.

In a third aspect, a mobile device holder is disclosed. The mobile device holder comprises a case assembly comprising a case defining a cavity, the cavity having a generally flat inner surface and an outer surface opposite the inner surface, the cavity configured to receive a mobile electronic device, the generally flat surface having eight case recesses spaced apart equally circumferentially and spaced apart radially by a fixed radius from a first center the outer surface of the case further comprises a plurality of first registration members, and eight case magnets, each case magnet positioned within the corresponding case recess, the case magnets arranged with alternating polarity orientation where each of the case magnets has a different magnetic polarity orientation from that of the immediately adjacent case magnets. The mobile device holder further comprises a mounting assembly comprising a generally flat mounting base having eight base protrusions radially spaced apart by a fixed radius from a first center, each of the base magnets spaced apart equally circumferentially and spaced apart radially by the fixed radius from a second center, and a mount cap positioned above and coupled to the mounting base, the mount cap surrounding the base magnets, the top base surface of the mount cap further comprises a plurality of second registration members. The case assembly magnetically couples to the mounting assembly when the outer surface of the case is placed on the mount cap, wherein the first registration members of the case engages with the second registration members of the base top cap during the coupling process.

In a third preferred embodiment, the mobile device holder further comprises eight base magnets, each base magnet positioned within the corresponding base recess, the base magnets arranged with alternating polarity orientation such that each of the base magnets has a different magnetic polarity orientation from that of the immediately adjacent base magnets. The mobile device holder further comprises a fixed or foldable hinged stand coupled to the mounting assembly. The mobile device holder further comprises an automobile vent mount device coupled to the mounting assembly. The mobile device holder further comprises an automobile visor clip coupled to the base assembly. The mobile device holder further comprises a mount coupled to the mounting assembly, the mount having one or more straps which are configured to detachably couple to another object.

In a fourth aspect, a mobile device holder is disclosed. The mobile device holder comprises a case assembly configured to receive a mobile electronic device, a case magnet coupled to the case assembly, a generally flat mounting base, and a base magnet coupled to the generally flat mounting base. The case assembly magnetically couples to the mounting assembly when the outer surface of the case assembly is placed on the mounting base. The outer surface of the case further comprises a singular first registration member or a plurality of first registration members. The mount cap further comprises a top surface, the top surface further comprises a second registration member or a plurality of second registration members. The first registration member or members of the case engages with the second registration member or members of the base during the coupling process.

In a fourth preferred embodiment, the first registration member or members include a rectangular shaped registration recess, the second registration member or members include a rectangular shaped registration protrusion, and the first registration recess or recesses receives the second registration protrusion or protrusions during the coupling process. The described mounting base, as a separate component, preferably can be detachably or fixedly attached to another stationary or mobile mounting surface by means of mechanical fastener, elastomeric attachment, adhesive attachment, or integrated attachment feature. The defined flat mounting base as a separate component preferably can be fixedly secured to a flat surface via mechanical fastener, adhesives, or elastomeric attachment. The defined flat mounting base as a separate component preferably can be worn by the user by means of a harness, headband, arm band, belt clip, etc. The defined flat mounting base as a separate component preferably can be detachably secured to or integrated with a handheld pole, where the described base is pivotally attached to a fixed or extendable pole. The defined flat mounting base as a separate component preferably can be detachably secured to or integrated with a threaded tri-pod mount. The defined flat mounting base as a separate component preferably can be fixedly Integrated into a wallet, by various means of attachment.

These and other features and advantages of the invention will become more apparent with a description of preferred embodiments in reference to the associated drawings.

## DESCRIPTION OF THE DRAWINGS

FIG. **1** is a side, perspective view of a mobile device holder comprising a case assembly and a mounting assembly.

FIG. **2** is a side, exploded view of the mounting assembly.

FIG. **3** is a side, partially-assembled view of the mounting assembly.

FIG. **4** is a top, exploded view of the mounting assembly.

FIG. **5** is a view of the underside of the mounting assembly showing a mounting hole.

FIG. **6** is a top, perspective view of the mobile device holder.

FIG. **7** is an exploded view of the case assembly.

FIG. **8** is a view of the underside of the case assembly.

FIG. **9** is an exploded view of the mobile device holder.

FIG. **10** is a schematic representation of the alignment of the magnets in the case and mounting assemblies.

FIG. **11** is a schematic representation of the alignment of the magnets in the case and mounting assemblies where the case assembly is rotated ninety degrees.

FIG. **12** is a side, perspective view of the mounting assembly coupled to a foldable table stand.

FIG. **13** is a side, perspective view of the mobile device holder with a smart phone affixed to the foldable table stand.

FIG. **14** is a side view of a vent mount for affixing to an automobile vent louver.

FIG. **15** is a top view of the vent mount.

FIG. **16** is a front, perspective view showing the mobile device holder attached to the automobile vent.

FIG. **17** is a side view of an automobile visor clip for affixing to an automobile visor.

FIG. **18** is a perspective view of the visor clip having a mounting assembly.

FIG. **19** is a side view of a mounting assembly affixed to an automobile visor.

FIG. **20** is a front view illustrating a mobile device affixed to an automobile visor from the perspective of a driver.

FIG. **21** is a side view of a mounting assembly affixed to a universal mount.

FIG. **22** is a side, perspective view of a mobile device affixed to a baby stroller.

FIG. **23** is a view of a user interacting with a mobile device affixed to the stroller.

FIG. **24** is a front, perspective view of a mobile device affixed to a post of a headrest.

FIG. **25***a* is a side, perspective view of a mount assembly attaching to an adhesive backing.

FIG. **25***b* is a top, perspective view of a mounting assembly in a wallet.

FIG. **26** is front, perspective view of a mounting assembly affixed to a head mount.

FIG. **27** is a mounting assembly affixed to a backpack.

FIG. **28** is a mounting assembly coupled to a bicycle mount.

FIG. **29** is an illustration of a bicycle mount attached to a bicycle.

FIG. **30** is a front, perspective view of a mounting assembly attached to a flying squirrel mount.

FIG. **31** is an illustration of a wall mounted mobile device.

FIG. **32** is a cross-sectional view of a zert head which may be press fit into the case assembly.

FIG. **33** is a front view of a chest harness having a hinged assembly.

FIG. **34** is a front view of the hinged assembly configured to mount to the chest harness.

FIG. **35** is a side view of the hinged assembly.

FIG. **36** is a side, perspective view of the hinged assembly.

FIG. **37** is a side, perspective view of the chest harness strapped to a user.

FIG. **38** is a side view of hinged assembly with an adhesive backing.

FIG. **39** is a representation of the hinged assembly attaching to a helmet.

FIG. **40** is a representation of the hinged assembly attached to an automobile.

## DETAILED DESCRIPTION OF THE PREFERRED EMBODIMENTS

The following preferred embodiments are directed to mobile device holders for affixing mobile devices to other objects. Mobile devices provide users with real-time access to telephony, Internet, text messaging, GPS navigation, audio, and video, for example. Many activities require a convenient means for attaching and detaching mobile devices to and from other objects.

In one or more embodiments, a two-piece mobile device holder having a case assembly and a mounting assembly is contemplated. The case assembly is configured to receive and secure a mobile device, such as a smart phone. The mounting assembly is configured to be detachably coupled to other objects, such as to mounts to automobile visors or automobile air conditioning vents. A first set of permanent magnets is arranged in a circular pattern in the case assembly; and a second set of permanent magnets is arranged in a circular pattern in the mounting assembly. In one or more embodiments, the magnets in both the first and second set of magnets are arranged with alternating magnetic polarity around the circular pattern forming a ring of magnets. In other words, the magnetic polarity varies as a "North Pole-South Pole-North Pole-South Pole- . . . " pattern for the sets of magnets in the case assembly and the mounting assembly. As the case assembly is placed on top of the mounting assembly, the magnets in the mounting assembly will attract magnets with opposite polarities in the case assembly. Hence, the case assembly is secured to the mounting assembly by the magnetic attraction force between the two sets of magnets. A user may detach the case assembly from the mounting assembly by rotating the case assembly such that the magnets in the case assembly are now adjacent to magnets in the mounting assembly of the same polarity.

As used herein and as is commonly known in the art, a magnet may refer to permanent magnets which create persistent magnetic fields. Magnets may be characterized as having a north pole and a south pole on opposite ends of the magnet. An end of a first magnet having a magnetic polarity (e.g., north pole for example) will repel a second magnet having an end in proximity of the same magnetic polarity (e.g., north pole in this example) and will attract a second magnet having an end of opposite polarity (e.g., south pole in this example). A magnetic polarity orientation refers to the direction or vector from the south pole to the north pole within a magnet. FIG. **1** is a side, perspective view of a mobile device holder **101** i.e., a flat mounting base) comprising a case assembly **150** and a mounting assembly **110**. The case assembly **150** has a cavity **153** having a generally flat inner surface **154** and an outer surface **155** opposite the inner surface **154**. The cavity **153** is configured to receive a mobile electronic device such as a smartphone. In one or more embodiments, the case assembly **150** has one or more side walls **156** which may secure the smart phone in place.

FIG. **2** is a side, exploded view of the mounting assembly **110**. The mounting assembly comprises a generally flat mount base **120** and a mount cap **130**. The mount base **120** has a plurality of base recesses **122** for receiving a plurality of base magnets **124***a* and **124***b*. The generally flat mounting base **120** has a plurality of base recesses spaced apart equally circumferentially and spaced apart radially by the fixed radius **123** from a center **121**. In one or more embodiments, the mounting assembly has eight base recesses. The outer surface **131** of the mount cap **130** has a plurality of protrusions **134** and **132** for registering with the case assembly when the case assembly is coupled to the mount base. The protrusions **132** run along the perimeter of the mount cap **130**. Protrusions **134** extend radially away from the center of the mount cap **130**.

FIG. **3** is a side, partially assembled view of the mounting assembly **110**. The base recesses **122** each receive and secure base magnets **124***a* and **124***b*. Base magnets **124***a* and **124***b* may be permanent magnets where the top, exposed

surfaces of base magnets **124***a* have the same magnetic pole, and the top, exposed surfaces of base magnets **124***b* all have the magnetic pole opposite to that of the base magnets **124***a*. In one or more embodiments, the top, exposed surfaces of base magnets **124***a* are all "north" and the top, exposed surfaces of base magnets are all "south." In one or more embodiments, the top, exposed surfaces of base magnets **124***a* are all "south" and the top, exposed surfaces of base magnets are all "north."

The base magnets **124***a* and **124***b* are placed along the perimeter of the mount base **120** and are arranged with alternating polarity orientation, such that each of the base magnets **124***a* and **124***b* has a different magnetic polarity orientation from that of the immediately adjacent base magnets **124***b* and **124***a*. This forms an alternating sequence of **124***a*-**124***b*-**124***a*-**124***b*-**124***a*-**124***b*-**124***a*-**124***b*. As the polarity of the top surfaces of base magnets **124***a* are opposite that of base magnets **124***b*, the base magnets **124***a* and **124***b* form an alternating sequence of top surface polarities as N-S-N-S and so forth.

FIG. **4** is a top, exploded view of the mounting assembly **110** showing the inner surface **133** of the mount cap **130**. FIG. **5** is a view of the underside of the mount base **120** showing a mounting hole **126**. As discussed below, the mounting hole **126** is employed to physically attach the mount base **120** to other objects. In one or more embodiments, the hole **126** is a threaded hole for accepting screws or nuts.

FIGS. **6-9** provide details of the case assembly **150**. FIG. **6** is a top, perspective view of the mobile device holder **101**. The case assembly **150** has a case **160** defining a cavity **152**, the cavity **152** having a generally flat inner surface **153** and an outer surface **155** opposite the inner surface **153**. In one or more embodiments, a plurality of recesses **162** are formed on the flat inner surface **153** and are shaped to receive a plurality of case magnets **164***a* and **164***b* as shown in FIG. **7**. Each of the case recesses **162** are spaced apart equally circumferentially and spaced apart radially by a fixed radius **158** from a center **157**. In one or more embodiments, the flat inner surface **153** has eight case recesses. In one or more embodiments radius **158** is equal to radius **123**.

The case recesses **162** each receive and secure base magnets **164***a* and **164***b*. Base magnets **164***a* and **164***b* may be permanent magnets where the bottom surfaces (i.e., the end surface in contact with the inner surface **153**) of case magnets **164***a* all have the same magnetic pole, and the bottom surfaces of case magnets **164***b* all have the magnetic pole opposite to that of the case magnets **164***a*. In one or more embodiments, the bottom surfaces of case magnets **164***a* are all "north" and the bottom surfaces of case magnets are all "south." In one or more embodiments, the bottom surfaces of case magnets **164***a* are all "south" and the bottom surfaces of case magnets are all "north."

The case magnets **164***a* and **164***b* are placed along the perimeter of a larger circle and are arranged with alternating polarity orientation such that each of the case magnets **164***a* and **164***b* has a different magnetic polarity orientation from that of the immediately adjacent case magnets **164***b* and **164***a*. This forms an alternating sequence of **164***a*-**164***b*-**164***a*-**164***b*-**164***a*-**164***b*-**164***a*-**164***b*. As the polarity of the bottom surfaces of case magnets **164***a* are opposite that of case magnets **164***b*, the case magnets **164***a* and **164***b* form an alternating sequence of bottom surface polarities as N-S-N-S, and so forth.

As shown in FIG. **8**, the outer surface **161** of the case has a plurality of recesses **174** and **172** for registering with the base mount when the case assembly is coupled to the mount base. The recesses **172** run along a circle forming arcs on the case **160**. Recesses **174** extend radially away from the center **157** of the case **160**.

FIGS. **10** and **11** are schematic representations of the alignment of the magnets in the case and mounting assemblies. The case assembly **150** mates with the mounting assembly **110** as a result of the magnetic attraction between the base magnets **124***a* and **124***b* and the case magnets **164***a* and **164***b*. When the top surfaces of the base magnets **124***a*/**124***b* have opposite magnetic polarity of the bottom surface of the adjacent case magnets **164***a*/**164***b*, the case assembly **150** is magnetically coupled to the base mount **110**.

In one or more embodiments, the polarity of the magnets **124***a* is opposite that of magnets **164***b*, and the polarity of **124***b* is opposite that of case magnets **164***a*. As opposing poles attract, the case assembly **150** will magnetically couple to the mounting assembly **110**.

FIG. **10** also depicts the alignment and registration of the recesses **174** of the case assembly **150** receiving the protrusions **134** of the base assembly **110**. The recesses **172** of the case assembly **150** also receive the protrusions **132** of the base assembly **110**. The recesses receiving the corresponding protrusions serve to accurately align the case assembly **150** with respect to the mounting assembly **110**, as well as to provide lateral support for the case assembly **150**.

As shown schematically, a user may rotate the case assembly **150** relative to the base assembly **110**. The rotation will misalign the case magnets **164***a*/**164***b* from their attractive coupling to the base magnets **124***a*/**124***b* shown in FIG. **10**, and position case magnets **164***a*/**164***b* above base magnets **124***a*/**124***b* having the same magnetic polarities. Rotating the case assembly **150** relative to the mounting assembly **110** will cause the case assembly **150** to magnetically attach and detach at fixed angles.

FIG. **11** is a schematic representation of the alignment of the magnets in the case assembly **150** and the mounting assembly **110** where the case assembly **150** is rotated ninety degrees. Similarly, the case assembly **150** mates with the mounting assembly **110** rotated ninety degrees clockwise as a result of the magnetic attraction between the base magnets **124***a* and **124***b* and the case magnets **164***a* and **164***b*. When the top surfaces of the base magnets **124***a*/**124***b* have opposite magnetic polarity of the bottom surface of the adjacent case magnets **164***a*/**164***b*, the case assembly **150** is magnetically coupled to the base mount **110**. In one or more embodiments, the polarity of the magnets **124***a* is opposite that of magnets **164***b*, and the polarity of **124***b* is opposite that of case magnets **164***a*. As opposing poles attract, the case assembly **150** will magnetically couple to the mounting assembly **110**.

FIG. **11** also depicts that each case magnet **164***a*/**164***b* is positioned angularly equidistant from the immediately adjacent case magnet **164***b*/**164***a* and each base magnet **124***a*/**124***b* is positioned angularly equidistant from the immediately adjacent base magnet **124***b*/**124***a* by an angle θ. For eight equally spaced recesses, the angle θ is 45 degrees. As the case assembly **150** is rotated about the mounting assembly, the case assembly **150** will attach to the mounting assembly at 0, 90, 180, and 270 degrees, and will detach at 45, 135, 225, and 315 degrees.

FIGS. **12-31** illustrate several examples for attaching the mobile device holder **101** to various objects. FIG. **12** is a side, perspective view of the mounting assembly **110** coupled to a foldable table stand **201**. The table stand has a base **212** coupled to a vertical plate **216** with a hinge **214**. The mounting assembly **110** may be attached to the table

stand **201** via a screw through a hole on the vertical plate secured to a threaded hole **126** as shown in FIG. **5**. FIG. **13** is a side, perspective view of the mobile device holder **101** affixed to the foldable table stand **201**. Consumers may use the table stand **201** while viewing pictures or video, or while engaging in video telephone calls for example.

FIGS. **14-16** are views of a vent mount **301** for affixing to an automobile vent louver **410**. The vent mount **301** has protruding fingers **310** which may snap on to vent louvers of an automobile. FIG. **16** is a front, perspective view **401** showing the mobile device attached to the automobile vent **410** from the perspective of the driver. Consumers may use the vent mount **301** while navigating through traffic using GPS for example.

FIGS. **17-20** illustrate an automobile visor clip holder **501** for attaching the mobile device holder **101** an automobile visor. The visor clip may have a recessed portion **512** shaped to receive the mounting assembly, and well as a thru-hole **514** for receiving a screw **516** that would couple to a threaded hole **126** on the mounting assembly. The visor clip **501** may attach to a visor **520** or another thin supporting member **513**. FIG. **20** is a front view illustrating a mobile device **101** affixed to an automobile visor **520** from the perspective of a driver.

FIGS. **21-24** illustrate a universal mount **601** for attaching the mobile device holder **101** to a cylindrically shaped bar. FIG. **21** is a side view of a mounting assembly **110** affixed to a universal mount **601**. The universal mount **601** may have a flat section **610** for coupling to the mounting assembly **110**, as well as a strap **612** which wraps around other objects and is held in place with a locking mechanism **614**. FIGS. **22-23** are views of a mobile device holder **101** affixed to a baby stroller **630**. FIG. **24** shows a mobile device holder **101** attached to a post of an automobile headrest. The universal mount **601** provides a convenient means for attaching a smart phone to objects having exposed bars or rails.

FIG. **25***a* is a side, perspective view of a mount assembly **110** attaching to an adhesive backing **147** having a top adhesive surface **149***a* and a bottom adhesive surface **149***b*. The mount assembly **110** may comprise a stamped ferrous sheet metal with a peel off adhesive backing **149** for walls, desks, and anything one desires to which to mount a smart phone. FIG. **25***b* is a view of a mounting assembly **110** in a wallet **701** secured to a wallet fold **710**.

FIGS. **26-27** illustrate the mobile device holder **101** attached to personal objects. FIG. **26** is front, perspective view of a mounting assembly **110** affixed to a head mount **801** having straps **810** and **812**. FIG. **27** is a view of a mounting assembly affixed to a backpack **901** via straps **901**.

FIGS. **28-29** illustrate the mounting assembly **110** attached to a bicycle **1020**. FIG. **28** is a bicycle mount **1001** coupled to a mounting assembly **110**, the bicycle mount having a first section **1012** having a hole, and a second section coupled to the first section via a hinge **1010**.

FIG. **30** is a front, perspective view of a mount assembly **110** attached to a flying squirrel mount **1101**. FIG. **31** is an illustration of a wall mount **1201** for securing a mobile device holder **101**. The wall mount **1201** allows users to view videos or listen to music, for example. The wall mount **1201** may use an adhesive backing **147** as illustrated in FIG. **25***a*.

FIG. **32** is a cross-sectional view of a zert nut **1301** which may be press fit into the case assembly. The zert nut **1301** has a plurality of exterior ridges **1302** for securing into an external hole. The zert nut **1301** also has a threaded, inner surface **1304** for receive screws or other threaded components. The zert nut **1301** may be employed in the mounting assembly depicted in FIG. **5**, the visor clip having a mounting assembly as depicted in FIG. **18**, the universal mount depicted in FIG. **21**, and the squirrel mount depicted in FIG. **30**.

FIGS. **33-37** illustrate a chest harness **1401** having a hinged assembly **1450** mounted on the region **1410** on the chest harness **1401**. The hinged assembly **1450** has a base **1416** attached to arms **1412** via the hinge **1418**. The arms **1412** are connected to a mounting surface **1414**. A thumb screw **1420** is employed to secure the arms **1412** to the base **1416** at a desired angle as illustrated in FIG. **36**. In one or more embodiments, the base **1416** may be coupled to a zert nut **1301**. FIG. **37** is a side, perspective view of the chest harness **1401** strapped to a user.

FIG. **38** is a side view of hinged assembly **1501** with an adhesive backing **1417**. The hinged assembly may be placed on flat surfaces such as on a helmet shown **1601** in FIG. **39**, or on an automobile **1602** as shown in FIG. **40**.

Although embodiments referenced herein generally describe a multi-piece case assembly **150** and mounting assembly **150** each having recesses **122** and **162** for holding case and base magnets **164/124**, other configurations are contemplated in one or more embodiments. In one or more embodiments, a case assembly is configured to receive a mobile electronic device, where a plurality of case magnets are coupled to the case assembly. Each of the case magnets are spaced apart equally circumferentially and spaced apart radially by a fixed radius from a first center. The mobile device holder further comprises a generally flat mounting base, and a plurality of base magnets coupled to the generally flat mounting base, each of the base magnets spaced apart equally circumferentially and spaced apart radially by the fixed radius from a second center. The case assembly magnetically couples to the mounting base when the case assembly is placed on top of the mounting base.

Although the invention has been discussed with reference to specific embodiments, it is apparent and should be understood that the concept can be otherwise embodied to achieve the advantages discussed. The preferred embodiments above have been described primarily as mobile device holders for attaching mobile devices such as smart phones to other objects. In this regard, the foregoing description of the mobile device holders is presented for purposes of illustration and description. Furthermore, the description is not intended to limit the invention to the form disclosed herein. Accordingly, variants and modifications consistent with the following teachings, skill, and knowledge of the relevant art, are within the scope of the present invention. The embodiments described herein are further intended to explain modes known for practicing the invention disclosed herewith and to enable others skilled in the art to utilize the invention in equivalent, or alternative embodiments and with various modifications considered necessary by the particular application(s) or use(s) of the present invention.

What is claimed is:

**1**. A mobile device holder, comprising:

a case assembly comprising:

a case defining a cavity, the cavity having a generally flat inner surface and an outer surface opposite the inner surface, the cavity configured to receive a mobile electronic device;

a first plurality of magnets coupled to the case, each of the first plurality of magnets spaced apart equally circumferentially and spaced apart radially by a fixed radius from a first center of the first plurality of magnets;

a mounting assembly comprising:

a mounting base detached from and configured to couple to the case assembly;

a second plurality of magnets placed on the mounting base, each of the second plurality of magnets spaced apart equally circumferentially and spaced apart radially by the fixed radius from a second center of the second plurality of magnets, wherein the second plurality of magnets are distinct from the first plurality of magnets; and

a mount cap positioned above and coupled to the mounting base, the mount cap surrounding the second plurality of magnets, wherein

the outer surface of the case further comprises a plurality of first registration members;

the mount cap further comprises a top surface, the top surface further comprises a plurality of second registration members;

the first registration members of the case engages with the second registration members of the base during coupling, and

wherein the case assembly magnetically couples to the mounting assembly when: the first plurality of magnets of the case are axially aligned with the second plurality of magnets on the mounting base, wherein:

the first plurality of magnets alternate between a first magnetic pole type and a second magnetic pole type facing outward from the case assembly,

the second plurality of magnets alternate between the first magnetic pole type and the second magnetic pole type facing outward from the mounting base, and

magnets of the first plurality of magnets with the first magnetic pole type facing outward from the case assembly are axially aligned with magnets of the second plurality of magnets with the second magnetic pole type facing outward from the mounting base and toward pointed toward the magnets of the first plurality of magnets with the first magnetic pole type; and

the outer surface of the case is placed on the mount cap.

**2**. The mobile device holder of claim **1**, wherein:

the first registration members comprise a plurality of rectangular shaped registration recesses positioned radially away from the first center;

the second registration members comprise a plurality of rectangular shaped registration protrusions positioned radially away from the second center;

the first registration recesses receives the first registration protrusions during the coupling process.

**3**. The mobile device holder of claim **2**, wherein:

the case assembly magnetically couples to the mounting assembly when the first center is aligned with the second center and magnets from the first plurality of magnets are magnetically coupled to a corresponding magnet from the second plurality of magnets.

**4**. The mobile device holder of claim **3**, wherein:

each of the first plurality of magnets of the case is positioned angularly equidistant from the immediately adjacent one of the first plurality of magnets of the case; and,

each the second plurality of magnets of the mounting base is positioned angularly equidistant from the immediately adjacent one of the second plurality of magnets.

**5**. The mobile device holder of claim **3**, wherein the case assembly rotates about the mounting assembly and detachably couples with the mounting assembly at one or more fixed angles.

**6**. The mobile device holder of claim **3**, further comprising a fixed or foldable hinged stand coupled to the mounting assembly.

**7**. The mobile device holder of claim **3**, further comprising an automobile vent mount device coupled to the mounting assembly.

**8**. The mobile device holder of claim **3**, further comprising an automobile visor clip coupled to the mounting assembly.

**9**. The mobile device holder of claim **3**, further comprising a mount coupled to the mounting assembly, the mount having one or more straps which are configured to detachably couple to another object.

**10**. The mobile device holder of claim **3**, where the defined flat mounting base can be fixedly secured to a flat surface via mechanical fastener, adhesives, or elastomeric attachment.

**11**. The mobile device holder of claim **3**, where the defined flat mounting base can be worn by the user by means of a harness, headband, arm band, or belt clip.

**12**. The mobile device holder of claim **3**, where the defined flat mounting base can be detachably secured to or integrated with a handheld pole, where the described base is pivotally attached to a fixed or extendable pole.

**13**. The mobile device holder of claim **3**, where the defined flat mounting base can be detachably secured to or integrated with a threaded tri-pod mount.

**14**. The mobile device holder of claim **3**, where the defined flat mounting base can be fixedly integrated into a wallet, by various means of attachment.

**15**. A mobile device holder, comprising:

a case assembly configured to receive a mobile electronic device;

a first plurality of magnets coupled to the case assembly, the first plurality of magnets have a same first magnetic pole facing outward from the case assembly;

a mounting base detached from and configured to couple to the case assembly; and, a second plurality of magnets coupled to the mounting base, the second plurality of magnets have a same second magnetic pole facing outward from the mounting base, wherein:

the outer surface of the case further comprises a plurality of first registration members;

the mount cap further comprises a top surface, the top surface further comprises a plurality of second registration members; and

the first registration members of the case engages with the second registration members of the base during coupling;

wherein the case assembly magnetically couples to the mounting assembly when the outer surface of the case assembly is placed on the mounting base and the first magnetic pole of the first plurality of magnets is facing the second magnetic pole of the second plurality of magnets.

**16**. The mobile device holder of claim **15**, wherein:

the first registration members comprise a plurality of first rectangular shaped registration recesses positioned radially away from a first center;

the second registration members comprise a plurality of first rectangular shaped registration protrusions positioned radially away from a second center;

the first registration recesses receives the first registration protrusions during the coupling process.

**17**. The mobile device holder of claim **16**, wherein:

each case magnet is positioned angularly equidistant from the immediately adjacent case magnet; and

each base magnet is positioned angularly equidistant from the immediately adjacent base magnet.

**18**. The mobile device holder of claim **17**, wherein the first plurality of magnets are spaced apart equally circumferentially and spaced apart radially by a fixed radius from a first center and the second plurality of magnets are spaced apart equally circumferentially and spaced apart radially by a fixed radius from a second center.

* * * * *