IN THE UNITED STATES PATENT AND TRADEMARK OFFICE

Applicants: James Arthur Proctor, Jr. and James Arthur Proctor, III

For: VISUAL IDENTIFICATION INFORMATION USED AS CONFIRMATION IN A WIRELESS COMMUNICATION

PETITION TO MAKE SPECIAL UNDER 37 C.F.R. § 1.102(c)(1)

Special Program Examiner
Group 2600
Commissioner for Patents
P.O. Box 1450
Alexandria, VA 22313-1450

Sir:

Applicant, James Arthur Proctor, III, hereby petitions to make this application special as permitted under 37 C.F.R. § 1.102(c)(1). The grounds and conditions for granting this application special status are found in M.P.E.P. § 708.02 (IV), entitled "Applicant's Age".

James Arthur Proctor, III, one of the applicants of record for this application, is over 65 years of age.

The undersigned has evidence showing that Mr. Proctor is over 65 years of age.

It is respectfully requested that this Petition to Make Special be granted.

Respectfully submitted,

HAMILTON, BROOK, SMITH & REYNOLDS, P.C.

By___/David J. Thibodeau, Jr., Reg. No. 31,671/____
David J. Thibodeau, Jr.
Registration No. 31,671
Telephone: (978) 341-0036
Facsimile: (978) 341-0136

Concord, MA 01742-9133

Date: February 3, 2009

Google Exhibit 1045
Google v. SecCommTech
IPR2025-01182

IN THE UNITED STATES PATENT AND TRADEMARK OFFICE

Applicant: James Arthur Proctor, Jr. and James Arthur Proctor, III

For: VISUAL IDENTIFICATION INFORMATION USED AS CONFIRMATION IN A WIRELESS COMMUNICATION

INFORMATION DISCLOSURE STATEMENT

Commissioner for Patents
P.O. Box 1450
Alexandria, VA 22313-1450

Sir:

This Information Disclosure Statement is submitted:

☒ under 37 CFR 1.97(b), or
(Within any one of the following time periods: three months of filing national application (other than a CPA) or date of entry of the national stage in an international application; or before the mailing date of a first office action on the merits; or before the mailing of a first office action after the filing of a Request for Continued Examination).

☐ under 37 CFR 1.97(c) together with either:
- ☐ a Statement under 37 CFR 1.97(e), as checked below, or
- ☐ a $180.00 fee under 37 CFR 1.17(p), or
  (After the 37 CFR 1.97(b) time period, but before any of a final action, notice of allowance, or an action that closes prosecution, whichever occurs first)

☐ under 37 CFR 1.97(d) together with:
- ☐ a Statement under 37 CFR 1.97(e), as checked below, and
- ☐ a $180.00 fee under 37 CFR 1.17(p), or
  (Filed after final action, notice of allowance, whichever occurs first, or if prosecution otherwise closes, but on or before payment of the issue fee)

☐ under 37 CFR 1.97(i):
Applicant requests that the IDS and cited reference(s) be placed in the application file.
(Filed after payment of issue fee)

Statement Under 37 CFR 1.97(e)

☐ Each item of information contained in this Information Disclosure Statement was first cited in any communication from a foreign patent office in a counterpart foreign application not more than three months prior to the filing of this Information Disclosure Statement; or

☐ No item of information contained in this Information Disclosure Statement was cited in a communication from a foreign patent office in a counterpart foreign application, and, to the knowledge of the undersigned, after making reasonable inquiry, no item of information contained in the information disclosure statement was known to any individual designated in 37 CFR 1.56(c) more than three months prior to the filing of this Information Disclosure Statement.

Statement Under 37 CFR 1.704(d) (Patent Term Adjustment)
Applies to original applications (other than design) filed on or after May 29, 2000

☐ Each item of information contained in the Information Disclosure Statement was cited in a communication from a foreign patent office in a counterpart application and this communication was not received by any individual designated in § 1.56(c) more than thirty days prior to the filing of the Information Disclosure Statement.

☒ Enclosed herewith is a Listing of References:

- ☐ Copies of the cited references are enclosed except as indicated below.
- ☒ Copies of issued U.S. patents and published U.S. applications are not required and are not being provided.
- ☐ Copies of the cited references submitted with an Information Disclosure Statement in prior application, U.S. Application No. [ ], to which priority under 35 U.S.C. 120 is claimed, are not required under 37 CFR 1.98(d)(1) and (2) and are thus not provided.

☐ The listed references were cited in the enclosed Search Report in counterpart foreign application [add application number], which is listed in the attached Listing of References.

☐ The "concise explanation" requirement (non-English references) for reference(s) [ ] under 37 CFR 1.98(a)(3) is satisfied by:

- ☐ the explanation provided on the attached sheet.
- ☐ the explanation provided in the Specification.
- ☐ submission of the enclosed International Search Report.
- ☐ submission of the enclosed English-language version of a foreign Search Report and/or foreign Office Action.
- ☐ the enclosed English language abstract.

☐ Applicant requests that the following non-published pending applications be considered:
(Affix a label or apply the stamp "Non-Published IDS Reference - Do Not Scan" to the front of each unpublished pending appl'n.)

U.S. Patent Application No. [ ], by [inventor(s)], filed [ ], Docket No.: [ ]

U.S. Patent Application No. [ ], by [inventor(s)], filed [ ], Docket No.: [ ]

U.S. Patent Application No. [ ], by [inventor(s)], filed [ ], Docket No.: [ ]

☐ A copy of each above-cited application, including the current claims, is enclosed, except any application filed on or after June 30, 2003, which has been scanned into the PTO's Image File Wrapper (IFW) system and is available to the examiner.

☐ A copy of each above-cited application, including the current claims, is enclosed, except those entered in prior application, U.S. Application No. [ ], to which priority under 35 U.S.C. 120 is claimed.

It is requested that the information disclosed herein be made of record in this application.

Method of payment:

☐ A check for the fee noted above is enclosed, or the fee has been included in the check with the accompanying Reply.

☐ Please charge Deposit Account 08-0380 in the amount of $[ ].

☒ Please charge any deficiency in fees and credit any overpayment to Deposit Account 08-0380.

Respectfully submitted,

HAMILTON, BROOK, SMITH & REYNOLDS, P.C.

By /David J. Thibodeau, Jr., Reg. No. 31,671/
David J. Thibodeau, Jr.
Registration No. 31,671
Telephone: (978) 341-0036
Facsimile: (978) 341-0136

Concord, MA 01742-9133
Dated: February 3, 2009

Substitute for form 1449B/PTO **INFORMATION DISCLOSURE STATEMENT IN AN APPLICATION** **LISTING OF REFERENCES** **January 30, 2009** (Use several sheets if necessary)	ATTORNEY DOCKET NO. 4394.1003-000		APPLICATION NO.
	FIRST NAMED INVENTOR James Arthur Proctor, Jr.		FILING DATE
	EXAMINER	CONFIRMATION NO.	GROUP

U.S. PATENT DOCUMENTS

Examiner's Initials	REF. NO.	DOCUMENT NUMBER Number-Kind Code (if known)	ISSUE DATE / PUBLICATION DATE MM-DD-YYYY	NAME OF PATENTEE OR APPLICANT OF CITED DOCUMENT
	A1	7,185,204	02-27-2007	Narayanaswami, *et al.*
	A2	6,487,601	11-26-2002	Hubacher, *et al.*
	A3	7,433,694	10-07-2008	Morgan, *et al.*
	A4	7,414,988	08-19-2008	Jones, *et al.*
	A5	7,403,762	07-22-2008	Morgan, *et al.*
	A6	7,305,245	12-04-2007	Alizadeh-Shabdiz, *et al.*
	A7	7,434,723	10-14-2008	White, *et al.*
	A8	7,349,871	03-25-2008	Labrou, *et al.*
	A9	7,280,847	10-09-2007	Goldthwaite, *et al.*
	A10	7,177,594	02-13-2007	Burr
	A11	7,433,649 B2	10-07-2008	Toulis, *et al.*
	A12	2008/0222711	09-11-2008	Michaelis
	A13	2008/0182592	07-31-2008	Cha, *et al.*
	A14	2008/0167961	07-10-2008	Wentler, *et al.*
	A15	2008/0133403	06-05-2008	Hamzeh
	A16	2008/0097851	04-24-2008	Bemmel, *et al.*
	A17	2008/0010190	01-10-2008	Rackley, *et al.*
	A18	2007/0178886	08-02-2007	Wang, *et al.*
	A19	2007/0106612	05-10-2007	O'Brien, *et al.*
	A20	2006/0079284	04-13-2006	Lu, *et al.*
	A21	2006/0069922	03-30-2006	Jelinek, *et al.*

EXAMINER	DATE CONSIDERED

#864963 v1 - Listing of References (PTO-Form 1449)

Substitute for form 1449B/PTO **INFORMATION DISCLOSURE STATEMENT IN AN APPLICATION** **LISTING OF REFERENCES** **January 30, 2009** (Use several sheets if necessary)	ATTORNEY DOCKET NO. 4394.1003-000		APPLICATION NO.
	FIRST NAMED INVENTOR James Arthur Proctor, Jr.		FILING DATE
	EXAMINER	CONFIRMATION NO.	GROUP

U.S. PATENT DOCUMENTS

Examiner's Initials	REF. NO.	DOCUMENT NUMBER Number-Kind Code (if known)	ISSUE DATE / PUBLICATION DATE MM-DD-YYYY	NAME OF PATENTEE OR APPLICANT OF CITED DOCUMENT
	A22	2004/0030601	02-12-2004	Pond, *et al.*
	A23	2002/0073027	06-13-2002	Hui, *et al.*
	A24	2008/0181154	07-31-2008	Sherman
	A25	2008/0189394	08-07-2008	Ross, *et al.*
	A26	2004/0264466	12-30-2004	Huang
	A27	2004/0190468	09-30-2004	Saijonmaa
	A28	2003/0045272	03-06-2003	Burr
	A29	2002/0188565	12-02-2002	Nakamura
	A30	2008/0182591	07-31-2008	Krikorian
	A31	2008/0109741	05-08-2008	Messing, *et al.*
	A32	2006/0085419	04-20-2006	Rosen

EXAMINER	DATE CONSIDERED

Electronic Patent Application Fee Transmittal

Application Number:	
Filing Date:	
Title of Invention:	VISUAL IDENTIFICATION INFORMATION USED AS CONFIRMATION IN A WIRELESS COMMUNICATION
First Named Inventor/Applicant Name:	James Arthur Proctor, Jr.
Filer:	David J. Thibodeau/Nicole Isabelle
Attorney Docket Number:	4394.1003-000

Filed as Small Entity

Utility under 35 USC 111(a) Filing Fees

Description	Fee Code	Quantity	Amount	Sub-Total in USD($)
Basic Filing:				
Utility filing Fee (Electronic filing)	4011	1	82	82
Utility Search Fee	2111	1	270	270
Utility Examination Fee	2311	1	110	110
Pages:				
Claims:				
Miscellaneous-Filing:				
Petition:				
Patent-Appeals-and-Interference:				

Description	Fee Code	Quantity	Amount	Sub-Total in USD($)
Post-Allowance-and-Post-Issuance:				
Extension-of-Time:				
Miscellaneous:				
			Total in USD ($)	**462**

Electronic Acknowledgement Receipt	
EFS ID:	4725010
Application Number:	12364823
International Application Number:	
Confirmation Number:	4791
Title of Invention:	VISUAL IDENTIFICATION INFORMATION USED AS CONFIRMATION IN A WIRELESS COMMUNICATION
First Named Inventor/Applicant Name:	James Arthur Proctor, Jr.
Customer Number:	21005
Filer:	David J. Thibodeau/Nicole Isabelle
Filer Authorized By:	David J. Thibodeau
Attorney Docket Number:	4394.1003-000
Receipt Date:	03-FEB-2009
Filing Date:	
Time Stamp:	15:45:22
Application Type:	Utility under 35 USC 111(a)

Payment information:

Submitted with Payment	yes
Payment Type	Deposit Account
Payment was successfully received in RAM	$462
RAM confirmation Number	1010
Deposit Account	080380
Authorized User	
The Director of the USPTO is hereby authorized to charge indicated fees and credit any overpayment as follows:	
Charge any Additional Fees required under 37 C.F.R. Section 1.21 (Miscellaneous fees and charges)	

File Listing:

Document Number	Document Description	File Name	File Size(Bytes)/ Message Digest	Multi Part /.zip	Pages (if appl.)
1	Miscellaneous Incoming Letter	43941003000TRANS.pdf	122178 15f79e66ac38ac3eb1095b7e63d5d69f3e006ed4	no	1
Warnings:					
Information:					
2		43941003000SPEC.pdf	203584 7425e10ca52886afb45ff6e4aada40dac42ca606	yes	46
	Multipart Description/PDF files in .zip description				
	Document Description		**Start**	**End**	
	Specification		1	41	
	Claims		42	45	
	Abstract		46	46	
Warnings:					
Information:					
3	Drawings-only black and white line drawings	43941003000DRWS.pdf	789506 d0abb2cb2e5eea3006dbbedc51f59e3ee50534b7	no	14
Warnings:					
Information:					
4	Fee Worksheet (PTO-06)	43941003000FEETRANS.pdf	65601 a62a536acbf530355b4551aea0613057d80e321b	no	1
Warnings:					
Information:					
5	Miscellaneous Incoming Letter	43941003000SES.PDF	120232 b30baef28ca9a5cc580a65e5cfc25013af3f6820	no	1
Warnings:					
Information:					
6	Oath or Declaration filed	43941003000DEC.pdf	251152 fbb92d85954858c4893c3e3f678864e20008c42b	no	2
Warnings:					
Information:					
7	Petition to make special based on Age/ Health	43941003000PETITION.pdf	41823 86c4b3f70afc331b125457cafc318c8df36a13d3	no	1

Warnings:					
Information:					
8	Information Disclosure Statement Letter	43941003000IDS.pdf	93766 589bfd7e069fd44ee3eba557d990d44158879baa	no	3
Warnings:					
Information:					
9	Information Disclosure Statement (IDS) Filed (SB/08)	43941003000LOR.pdf	73347 6db61d21707c63af8237d0c0e9e95631ac066f91	no	2
Warnings:					
Information:					
This is not an USPTO supplied IDS fillable form					
10	Fee Worksheet (PTO-06)	fee-info.pdf	33225 e86fef0fc5d200f5005c795a302bfa873ae96bf9	no	2
Warnings:					
Information:					
			Total Files Size (in bytes):	1794414	

This Acknowledgement Receipt evidences receipt on the noted date by the USPTO of the indicated documents, characterized by the applicant, and including page counts, where applicable. It serves as evidence of receipt similar to a Post Card, as described in MPEP 503.

<u>New Applications Under 35 U.S.C. 111</u>
If a new application is being filed and the application includes the necessary components for a filing date (see 37 CFR 1.53(b)-(d) and MPEP 506), a Filing Receipt (37 CFR 1.54) will be issued in due course and the date shown on this Acknowledgement Receipt will establish the filing date of the application.

<u>National Stage of an International Application under 35 U.S.C. 371</u>
If a timely submission to enter the national stage of an international application is compliant with the conditions of 35 U.S.C. 371 and other applicable requirements a Form PCT/DO/EO/903 indicating acceptance of the application as a national stage submission under 35 U.S.C. 371 will be issued in addition to the Filing Receipt, in due course.

<u>New International Application Filed with the USPTO as a Receiving Office</u>
If a new international application is being filed and the international application includes the necessary components for an international filing date (see PCT Article 11 and MPEP 1810), a Notification of the International Application Number and of the International Filing Date (Form PCT/RO/105) will be issued in due course, subject to prescriptions concerning national security, and the date shown on this Acknowledgement Receipt will establish the international filing date of the application.

HAMILTON, BROOK, SMITH & REYNOLDS, P.C.

UTILITY PATENT APPLICATION TRANSMITTAL *(Only for new nonprovisional applications under 37 CFR 1.53(b))*	Attorney Docket No.	4394.1003-000
	First Named Inventor	James Arthur Proctor, Jr.
	Express Mail Label No.	

Title of Invention	VISUAL IDENTIFICATION INFORMATION USED AS CONFIRMATION IN A WIRELESS COMMUNICATION		
Name of Assignee for Publication Purposes		City and State for Publication Purposes	

APPLICATION ELEMENTS
See MPEP chapter 600 concerning utility patent application contents.

ADDRESS TO: **Commissioner for Patents**
P.O. Box 1450
Alexandria, VA 22313-1450

1. ☒ Fee Transmittal Form
2. ☒ Specification **Total Pages 46**
   Both the claims and the abstract must start on a new page
   (For information on the preferred arrangement, see MPEP 608.01(a))
3. ☒ Drawing(s) (35 U.S.C. 113) **Total Sheets 14**
   ☒ Fig. of the Drawings for Publication **10**
   ☐ No Figure to be Published
4. ☒ Oath or Declaration **Total Pages 2**
   a. ☒ Newly executed (original or copy)
   b. ☐ Copy from a prior application (37 C.F.R. 1.63(d))
   (for continuation/divisional with Box 18 completed)
   i. ☐ DELETION OF INVENTOR(S)
   Signed statement attached deleting inventor(s) named in the prior application, see 37 CFR 1.63(d)(2) and 1.33(b).
5. ☐ CD-ROM or CD-R in duplicate ☐ Text file attached herewith
   Large table or Computer Program *(Appendix)*
6. ☐ Nucleotide and/or Amino Acid Sequence Submission
   (if applicable, items a.-c. are required)
   a. ☐ Computer Readable Form (CRF)
   i. ☐ Computer Readable Form (CRF)
   ii. ☐ Transfer Request (37 CFR 1.821(e))
   b. ☐ Specification Sequence Listing on:
   i. ☐ CD-ROM or CD-R (2 copies); or
   ii. ☐ Text file attached herewith *(electronic filing)*
   iii. ☐ Paper [ ] **Pages**
   c. ☐ Statements verifying identity of above copies

ACCOMPANYING APPLICATION PARTS

7. ☐ Assignment Papers *(Do not submit when e-filing application)*
8. ☐ 37 CFR 3.73(b) Statement ☐ Power of Attorney
   (when there is an assignee)
9. ☐ English Translation Document *(if applicable)*
10. ☒ Information Disclosure Statement
    (Listing of References *(formerly PTO-1449)*)
    ☐ Copies of foreign patent docs., publications, and other info.
11. ☐ Preliminary Amendment
12. ☐ Return Receipt Postcard *(Check this box if going by express mail)*
13a. ☐ A Foreign Priority Claim under 35 U.S.C. § 119 or 365
    i. ☐ is made to [country], [app. #], filed [ ]
    ii. ☐ is presented in the attached
    ☐ Specification ☐ Preliminary Amendment
    ☐ Separate Sheet ☐ Declaration
13b. ☐ A Certified Copy of each Priority Document
    i. ☐ is enclosed
    ii. ☐ was filed in U.S. Application No. [ ]
14. ☐ Nonpublication Request under 35 U.S.C. 122(b)(2)(B)(i).
    Applicant must attach form PTO/SB/35 or equivalent.
15. ☐ Remarks [/ Change of Correspondence Address]
16. ☒ Small Entity Statement(s)
17. ☒ Other: Petition to Make Special under 37 C.F.R.§1.102(c)(1)

18. **If a CONTINUING APPLICATION,** check appropriate box, and supply the requisite information below and in the first sentence of the specification following the title:
☐ Continuation ☐ Divisional ☐ Continuation-in-part (CIP) of prior application No.:
Prior application information: Examiner: Group Art Unit:

The entire disclosure of the prior application is considered a part of the disclosure of the accompanying application and is hereby incorporated by reference. ***(Add standard Related Applications section with incorporation by reference to specification or update same)***

19. **CORRESPONDENCE ADDRESS**

NAME	Customer No. 021005				
	HAMILTON, BROOK, SMITH & REYNOLDS, P.C.				
ADDRESS	530 Virginia Road, P.O. Box 9133				
CITY	Concord	STATE	MA	ZIP CODE	01742-9133
COUNTRY	USA	TELEPHONE	(978) 341-0036	FAX	(978) 341-0136

Signature	/David J. Thibodeau, Jr., Reg. No. 31,671/	Date	February 3, 2009
Submitted by Typed or Printed Name	David J. Thibodeau, Jr.	Reg. Number	31,671

864953_1

Inventor(s): James Arthur Proctor, Jr. and James Arthur Proctor, III

Attorney's Docket No.: 4394.1003-000

VISUAL IDENTIFICATION INFORMATION USED AS CONFIRMATION IN A WIRELESS COMMUNICATION

RELATED APPLICATION(S)

This application claims the benefit of U.S. Provisional Application No. 61/095,001, entitled "Central Server Enabled Proximity Based Applications Utilizing Both Short Range, and Wide Area Wireless Radios", filed on September 8, 2008 and U.S. Provisional Application No. 61/095,359, entitled "Central Server Enabled Proximity Based Applications Utilizing Both Short Range, and Wide Area Wireless Radios", filed on September 9, 2008. The entire teachings of the above applications are incorporated herein by reference.

BACKGROUND OF THE INVENTION

Several key internet applications have become increasingly popular in recent years. A current trend in internet usage involves social networking. Social networking involves making use of internet services which allow for the interaction and sharing of information between users of service.

Recently, mobile wireless communication standards have progressed to the point where relatively high speed data connections are possible to the phone over the wireless wide area network (WWAN). These standards include 1xEV-DO, HSDPA, EDGE, GPRS, Wi-Max (IEEE802.16e) and the like. Some social networking sites have included interfaces to their web sites optimized to make use of such high data rate mobile services for use on a mobile phone. These services are referred to as mobile social networking. For the most part, these services are simply versions of the standard

social networking, redesigned to be usable on a mobile phone, adding little in the way of increased capability.

With the common capability of global positioning system (GPS) receivers being incorporated into phones, some additional capabilities have been added to some mobile social networking interfaces by incorporating location information for the user and that of the individual they interact with.

These services are utilizing GPS to determine the location of one mobile wireless user and to another to facilitate mobile social networking. An example of an existing application utilizing this approach is Loopt (www.loopt.com), which coordinates location based social interaction. One problem with GPS based mobile application involves the GPS receiver not receiving sufficient signal strength in many indoor locations. As a result these enhanced capabilities have typically been targeted at either navigation to a specified location, or as in the case with Loopt, allowing a user to see where their friends are located in a relatively large geographic location, on a map.

Another popular application for the internet is electronic commerce. Just as with social network, e-commerce services have provided interfaces optimized for use on mobile phones which provide basically the same capabilities as the standard interfaces. Very little location or proximity information has been used to enhance the mobile e-commerce experience.

Some attempts have been made to utilize RFID (Radio Frequency Identification) chips to perform mobile payments. This approach requires the additional hardware on a phone in the form of a RFID chip, or other specialized features. As a result, mobile electronic commerce has mostly allowed users to perform transaction with a remote party, such as purchasing an item on ebay (www.ebay.com). To date mobile electronic payments for individuals who are in close proximity to each other have not been practical for a number of reasons. First there is a need for the individuals to have a third trusted party to help facilitate the electronic transaction. Secondly, there needs to be a

convenient, electronically secure, personally secure and anonymous method for each of the individuals to specify the party with which they wish to engage in a transaction. Thirdly, there is a need to cross validate the identities of the individuals engaged in the transaction. Finally, this method must work in indoors locations.

Most mobile phones on the market today support at least two wireless standards; one for the cellular wireless wide area network connection (WWAN) and one for a wireless personal or local area network (WPAN, WLAN). The cellular connection or WWAN is utilized for voice and data and can adhere to many different standards such as CDMA (IS-2000), GSM, W-CDMA, WiMax, etc.. The WPAN or WLAN connection is typically for short range communications and is often used for wireless hands free devices, such as headsets, peripherals, or higher speed internet connections. The typical standards used for the sort range wireless communications include Bluetooth, Wi-Fi, and in some cases Ultra-Wide-Band (UWB).

In another approach to mobile social networking some services have attempted to utilize short range wireless capabilities often available on phones such as IEEE802.11 (Wi-Fi) or Bluetooth to facilitate peer to peer communications. These are also referred to a MANETs or Mobile Ad-hoc Networks. These services typically consist of a software application operating on a mobile phone using peer to peer networks to facilitate communication between wireless devices. Examples of such existing applications include Mobile-Cheddar, Peer-2-Me, and Flobbi. Published US Patent application US 2008/0182591 A1 filed December 13, 2007 describes one such peer to peer approach. One issue with these approaches is that one can not communicate with a peer once the devices are no longer in proximity. A further disadvantage is that all information to be exchanged must be stored locally on each of the peer devices as the communication occurs directly between the two devices and any policy for the delivery of locally stored content is difficult to enforce without the potential for fraud such as spoofing identities between the peers. Such fraud may lead to concerns of personal safety or privacy allowing the identity of an individual to be determined when it is not desired. Further this peer to peer model is inadequate for

mobile electronic commerce in part due to the lack of an independent third party to facilitate the services required for a secure proximity based mobile electronic transaction as previously mentioned.

SUMMARY OF THE INVENTION

The present invention is generally concerned with facilitating the exchange of information and transactions between two entities associated with two wireless devices when the devices are in close proximity to each other utilizing both a short range and a long range wireless capability.

Preferred embodiments of the present invention are generally concerned with facilitating the exchange of information and transactions between two entities associated with two wireless devices when the devices are in close proximity to each other. In one embodiment, this can be accomplished by a first device using a first short range wireless capability to detect an identifier transmitted from a second device in proximity to the first device, ideally using existing short range radio communication standard capabilities such as Bluetooth (IEEE802.15.1-2002) or Wi-Fi (IEEE802.11). The detected identifier, being associated with the device, is also associated with an entity. Rather than directly exchanging application data flow between the two devices using the short range wireless capability, a second wireless capability then allows for one or more of the devices to communicate with a central server via the internet, and perform an exchange of application data flow. By using a central server to draw on stored information and content associated with the entity or entities, the server can broker the exchange of information between the entities and the devices. In a preferred embodiment, this exchange may be comprised of information stored on the server associated with a detected entity, and it may be comprised of information received from the detected device via the second wireless capability and facilitated by the server.

In addition, the server can also allow for a brokering service, ideally independent of the entities, to enable the application of policy based on the identity of

the two entities for the disclosure of stored information associated with the entities, the flow in information between the devices and the entities, and the enablement of procedures such as security verification between the entities.

Applications running on a device may also interact with the server to perform various functions, for example retrieving information associated with an entity or device, by utilizing a detected identifier. Such information may include stored content associated with the entity's account record such as music, pictures, links to social networking sites, instant messaging addresses, advertising content, and even executable scripts or application such as in AJAX. An example of such an application may include the detection of a device's identifier in a fixed location allowing for tour guide like information to be provided for that location.

As the server may be running applications which perform more function than just the retrieval of content, a pre-defined interaction process may also be applied by the server to the devices such as allowing the approval to share private content with the entity associated with the detected device. This process may eventually allow or disallow the sharing of information and to facilitate the interacting with another entity.

As a more complex example, in other embodiments, the devices may utilize the server as a third party to provide for new capabilities such as a secure three way e-commerce transaction between two entities. In this more complex process, the server may require confirmation of each party's identity with visual cross verification of the parties using pictures or other unique identifiers. The server may use this visual cross verification in conjunction with detecting that the individuals are in proximity with each other. The server may verify the proximity using GPS or using the peer to peer detection process in another embodiment. Further, the server may facilitate a process requiring each party to perform a step by step confirmation during the transaction including the stages of: the request for purchase, the payment, the receipt of goods and services, and the providing of payment receipt.

This differs from the approaches employed by prior art location aware mobile social networking techniques in that no GPS is needed to determine when one device is in proximity to another. Many wireless devices in use are not GPS-capable, and even when they are, GPS will often not operate indoors or where the GPS signal is weak. Using a peer to peer detection process to locate nearby devices allows for the operation of proximity detection indoors.

Preferred embodiments of the present invention can also differ from known peer to peer based social networking in that the information flow between the devices running the applications are over the wide area network via a central server, rather than carried over the peer to peer network itself. An example of this is a service called Flobbi, as discussed previously, where community members can identify each other via Bluetooth transmissions, then interact with chat. The messaging in this case is carried over Bluetooth itself. A distinction from such peer to peer approaches is the use of a central server to "broker" the transactions between peers, enhancing the ability to manage security and information disclosure. Such use allows for the opportunity to customize delivered content to include elements such as advertising or other content customized to the recipient based on additional information such as known personal purchasing history, or interests.

A further distinction of the preferred embodiment is the use of a central server to determine identities of detected peer devices, which additionally allows for secure and fraud resistant application of policies for the disclosure of information and content. An issue with the existing pure peer to peer approaches is that they are not capable of enforcing policy associated with the disclosure of information to unknown entities in a secure and fraud resistant manor. One reason for this is that information related to a user's device must be disclosed in the process of detection in the form of a static identifier. By the nature of the identifier, it must be static or peers would not be able to directly determine the identity of a friend over time with the information stored on their device. By using a central server, the system may coordinate the change of the identifiers from time to time such that the disclosure of an identifier by one device to

another does not compromise the identity of the device. In this case the identifier may be assigned from a central server and such server coordinate the identifier's change from time to time.

Reliance on a central server also allows the secure and fraud resistant application of disclosure policy. Such policy might include the verification of the identity of the party to which information (identity and presence for instance) or content (pictures of the account owner) is to be provided. Such verification is performed in an anonymous way such that in the process of verifying information associated with each party, no personal information is disclosed between the parties prior to satisfaction of some pre-set policy such as inclusion on a friend list or belonging to a specific group or organization. Another important policy required for such services would be the determination of any past negative feed back ratings by other past peers for behavior for the particular user to which the information is to be provided. An individual with significant poor ratings having detected a peer, may be denied access to personal information or even notification of arrival of the detected peer based on the server policy setting by the detected peer or the server in general.

A further distinction is to enable electronic payments for individuals who are in close proximity to each other. The central server can act as a third trusted party to help facilitate the electronic transaction between the individuals. Secondly, the server allows for a convenient, electronically secure, personally secure and anonymous method for each of the individuals to specify the party with which they wish to engage in a transaction. Thirdly, participants in a transaction can cross validate the identities of the individuals engaged in the transaction. Finally, because this method is proximity based it will also work indoors or in other situations where GPS location information is not available.

BRIEF DESCRIPTION OF THE DRAWINGS

The foregoing will be apparent from the following more particular description of example embodiments of the invention, as illustrated in the accompanying drawings in which like reference characters refer to the same parts throughout the different views. The drawings are not necessarily to scale, emphasis instead being placed upon illustrating embodiments of the present invention.

Figure 1 is a block diagram of two mobile devices utilizing a preferred embodiment.

Figure 2 is a block diagram of a fixed broadcast device and a mobile device.

Figure 3 is a flow diagram of the operation of an application on the mobile devices.

Figure 4 is a message sequence chart showing the Bluetooth discovery process using in one embodiment.

Figure 5 is a message sequence chart showing the Bluetooth Remote Name Request Process.

Figure 6 is a message sequence chart showing the IBSS beacon process.

Figure 7 is a message sequence chart showing the interaction between the server and two devices performing a detection and entering a chat application.

Figure 8A is a message sequence chart showing an E-commerce example.

Figure 8B is a continued example message sequence chart showing an E-commerce example.

Figure 9 is a message sequence chart showing an example of a mobile device and a fixed broadcast device interaction.

Figure 10 is a flow diagram for the server processing associated with the detection process.

Figure 11 is an example individual account record stored in the server associated with an Entity.

Figure 12 illustrates a timing reference for intermittent active and dormant times.

Figure 13 shows a diagram of functional blocks associated with management of dynamically assigned device identifiers.

DETAILED DESCRIPTION OF THE INVENTION

A description of example embodiments of the invention follows.

The teachings of all patents, published applications and references cited herein are incorporated by reference in their entirety.

Figure 1 is a block diagram of two mobile devices utilizing a preferred embodiment.

Referring to Figure 1, a central server 100 is connected to devices 106 and 108 by an internet protocol (IP) based network, carried over a series of connections, at least one of which is a wireless connection. For example, the server 100 has a connection allowing IP based communications to a cellular network 102 using connection 101. The cellular network is connected to devices 106 and 108 by wide area wireless links 104 and 103 respectively, allowing for IP based communications between the devices (106 and 108) and the server 100.

Devices 106, 108 can be considered "client(s)" of the server 100. The clients 106, 108 and server 100 provide processing, storage, and input/output devices for

executing wireless system protocols, interfaces, and application level programs according to the invention. Client devices 106, 108 can also be linked through various communications networks to other computing devices, including other client devices/processes and other server computer(s). Communications network(s) providing the connection 101 can typically be part of a remote access network, a global network (e.g., the Internet), a worldwide collection of computers, Local area or Wide area networks, and gateways that currently use respective protocols (TCP/IP, 3G Wireless, Bluetooth, etc.). Other electronic device/computer network architectures are suitable.

The internal structure of devices 106, 108 or server 100 includes one or more data processors (not shown in detail) that are well known in the art to include a system bus for data transfer among the other internal components of a computer system (e.g., processor, disk storage, memory, input/output ports, network ports, etc.). Attached to the bus are other input/output devices (e.g., keyboard, mouse, displays, printers, speakers, network interfaces, etc.). Network interfaces allow the computer to connect to various other devices attached to a network. Memory provides volatile storage for computer software instructions and data used to implement an embodiment of the present invention (e.g., applications programs and the like). Disk storage can provide non-volatile storage for computer software instructions and data used to implement an embodiment of the present invention.

In one embodiment, the invention may include a computer program product including a computer readable medium (e.g., a removable storage medium such as one or more DVD-ROM's, CD-ROM's, diskettes, tapes, etc.) that provides at least a portion of the software instructions for the invention system. Computer program product can be installed by any suitable software installation procedure, as is well known in the art. In another embodiment, at least a portion of the software instructions may also be downloaded over a cable, communication and/or wireless connection. In other embodiments, the invention programs are a computer program propagated signal product 107 embodied on a propagated signal on a propagation medium (e.g., a radio wave, an infrared wave, a laser wave, a sound wave, or an electrical wave propagated

over a global network such as the Internet, or other network(s)). Such carrier medium or signals provide at least a portion of the software instructions for the present invention.

More particularly, a given device 106, 108 uses a short range wireless link 107 such as a Bluetooth (IEEE802.15.1) or Wi-Fi (IEEE802.11) link to detect the presence of other devices such as device 108, and uses the wide area wireless network connections 103, 104 such as IS-2000, WCDMA, GPRS, EDGE, LTE, Wi-Max (IEEE802.16), or the like to perform communications to central server 100, and to perform the actual substantive communications between the wireless devices 106 and 108. Device 108 typically uses the short range wireless link 107 and wide area wireless link 103 in a similar manner to locate and initiate communicate with device 106. One distinction relative to prior art is that the short range wireless 107 is only used for the detection process, or to advertise a device's presence. In this embodiment, specific information called "wireless identifier" or simply "identify" (described in more detail below) is passed between devices 106 and 108 over the short range link 107. By transmitting a wireless identifier using the short range Wi-Fi, Bluetooth or other short range wireless link 107 and receiving wireless identifiers from other devices, this short range wireless link 107 will allow for a proximity detection process.

The support for IP based networking is standard for WWAN or 3G connections such as 1xEV-DO or HSPA, and as a result, communication between one device to another using the WWAN is currently supported in many devices with no modification. The use of simple detection of one or more identifiers requires significantly less resources in a phone than performing a complete peer to peer based communication network protocol, which accommodates dynamic configuration of nodes being added and dropped continuously. It is noted that the IP address on the WWAN interface is not location dependent in the present embodiment, but is addressing approaches are location dependent when true Peer to Peer topologies are used. The present embodiment has the advantage that communication between two devices may continue after the devices have left proximity of each other, but in the same manner as they had been

communicating previously. As a result, a user who detects a short range transmission of an identifier, then begins a conversation or some other interaction with that device via the wireless wide area network may continue that conversation even in the case where the two devices move out of the proximity of the each other, and are no longer within the reception range of the short range wireless communication protocol. Further, since it is contemplated that the wireless identifiers transmitted on the short range wireless link from the devices would occasionally change, for security reasons, the present embodiment has the advantage that ongoing communications between mobile devices will not be interrupted despite a change in one of the device's identifier. In the case where the identifier is a MAC address of the short range wireless network adapter for one of the devices, it is not otherwise possible to change this address and easily maintain on going communications in a true peer to peer topology.

Referring to Figure 2, central server 100 is connected to the cellular network 101, and is able to communicate information to and from wireless device 202 using a wide area wireless link such as IS-2000, WCDMA, GPRS, EDGE, LTE, Wi-Max (IEEE802.16), or the like within structure 205. Device 204 does not have a wide area wireless or cellular link, but transmits identifying information using short range wireless link 203. Device 202 is capable of receiving the indentifying information and requesting information related to that device from server 100.

An example of an application using this infrastructure follows. The device 204 will simply broadcast an identifier, with no WWAN connection but may facilitate advertising or local information. For instance, an account associated with one or more identifiers may belong to a museum. As a museum patron walks to an exhibit, the patron's device 202 will receive an identifier sent from museum broadcast device 204 operated by the museum. The patron device 202 passes the identifier or museum device 204 to the central server 100, which in-turn recognizes it as being associated with that exhibit within that museum and passes relevant information back to the user's device 202. A distinguishing feature of this approach relative to prior art is that the patron device 202 in this example may move out of proximity of broadcast device 204,

yet continue to view the content being provided by the server 100 related to the detected broadcast device 204. Content may include text, pictures, web pages, application software such as games, informative display applications, or other content such as audio or video to be offered to the user's device as well. Other examples might include electronic coupons (such as in a grocery store), menus or special offers in a restaurant.

Figure 3 is a block diagram with further detail of this operation. A device 106, 108, or 202 after performing a search (Fig 3, step 301) for identifiers on the WPAN or WLAN, will subsequently use the WWAN link to communicate with the central server 100. If the device does not find identifiers 302 it will either continue to search, or search at a later time 301. If identifiers are found in 302, the device may employ an action function 303, which would act as a filter that determines which of the detected identifiers should be passed to the server. This function may instead be omitted and all identifiers passed to the server 100. The idealized effect of the action function would be to reduce the number of requests to the server by not re-requesting recently requested identifiers which have already been passed to the server, for some period of time. In step 304, if no identifiers require server information, searching is continued in step 301.

Assuming there are identifiers which are new to the device, the device will pass along a list of currently detected identifiers and request 305 that the server return information related to any other local device. The server will return the information related to any identifier that meets certain policy requirements. For instance, information is returned which is 1) relevant to that device, and 2) that the device is authorized to receive.

As an example of the overall process, a detected identifier may be relevant to the receiving device if the user associated with the detected identifier is listed in a "friends list" for the owner of the receiving device. If the identifiers for the individuals within the friends list have been passed to the device, the action function 303 may make this determination. In the preferred embodiment, the server would determine the identity and the relevance of the detected identifiers, and the action function 303 would work to

reduce frequency of re-requests to the server. Figure 7 describes an example of how to use this for messaging associated with the device and server interaction during the detection and identifier inquiry process, with a more detailed explanation to follow.

To enable server 100 to associate an identifier with an entity, each device or entity (such as the museum) associated with an identifier has an account on server 100 or a related server as is common in information technology. The account is associated with the entity and the device and the current identifier.

As used herein, an "entity" may be a legal entity, such as an individual person or a business.

An "object" is intended to include a physical thing, such as a product that is being offered for sale, and may include a tangible article or intangible such as an electronic music or video file or photograph.

There is various information associated with each account. An example data record for an account is shown in Figure 11. When the account is associated with an individual or (other entity), there may be personal information such as the individual's name, contact information, information regarding allowed communication, such as chat or IM, links to their other social networking services, and the like. When the account is associated with a broadcast device 204 the account may contain content to be displayed to the detecting device 202. By utilizing the central server 100, broadcast devices may be tied to a location or product thereby providing relevant information about the location such as in the museum tour example previously discussed. In this situation, the content delivered to device 202 may be informative information about an exhibit including pictures, text, audio, or video and the like. In the case of a broadcast device being in a supermarket and near a specific product, advertisement or discounts with electronic coupons my be stored in the account and provided to device 202.

There can also be policy based permissions associated with each account and applied to any information associated with that account. The stored policy permissions

can be used to determine what information and under which situations information may be disclosed to another device or user associated with another account. For example, the entity (person in this case) associated with device 202 may have set a policy in their account to not receive any unsolicited information from a broadcast device so as to not be disturbed. However, the person associated with 202 may see the broadcast device and a sign stating a discount is available, and provide input to their device to request any broadcast information on a one time exception basis. The messaging associated with an example mobile and broadcast device process will be described in more detail to follow associated with Figure 9.

As already mentioned above, in step 301 of Figure 3, each device performs a search function looking for identifiers sent from other devices utilizing a short range wireless capability. The following describes the process of devices detecting identifiers from other devices in more detail.

The identifiers themselves may be a hardware address such as the MAC address of the wireless device, or they may be another label such as the SSID for a IEEE802.11 device, or the device name for a Bluetooth device. Referring to Figure 4, in the case where a Bluetooth wireless personal area network device is utilized, a first device 401 transmits an inquiry (ID_Packet) message 404, and any proximal Bluetooth devices 402, 403 respond with messages identifying the MAC address, called BD_ADDR in IEEE802.15.1 of each device using a message referred to as an "Inquiry Response" FHS message 405 containing the BD_ADDR or Bluetooth device address of the detected device. In the Bluetooth standard all devices 402, 403 are required to respond in this manner assuming they are enabled to be discoverable. To enable this, an application on the mobile device ensures the Bluetooth device is set to discoverable mode. Device 1 (401) will attempt to locate Devices on different channels by scanning the channels and transmitting multiple Inquiry (ID_Packet) messages. Such an example is shown with inquiry exchange 406 and 407 to discover Device N (403).

In one embodiment the BD_ADDR or MAC address of the Bluetooth device can be used as the Identifier and no further Bluetooth interaction is required until the next scan process is performed.

In another embodiment, the Bluetooth "Device Name" is used as the identifier. Figure 5 shows the process of a first device "Device 1" (501) determining another Bluetooth enabled device's (502) Bluetooth Device Name. Following the device discovery process completion from Figure 4, Device 1 501 sends a Page message 503 to another device (Device L 502). Message 504 is sent in response to create a temporary Asynchronous Connectionless Link (ACL) to be established between Device 1 501 and Device L 502, without an explicit connection request. Not having an explicit connection request indications the Entity associated with Device L would not have to provide explicit approval for a connection from their user input on the device, as would be the case if other services were requested from the device such as might be the case with a wireless headset or remotely connected GPS receiver to a phone. An ACL connection allows link management packets to be exchanged, and following interchanges of messages 505 and 506 to determine features of the devices, a temporary connection is established between the two devices. A name request message (507) is then sent by Device 1 to Device L, and Device L responds with at least one LMS_name_res message 508 containing the Bluetooth device name of Device L 502. If the name is longer than that allowed within the LMS_name_res message, additional messages follow to allow for the entire name to be delivered. Finally the connection is ended with message 509, LMP_detach.

The transmitted identifiers associated with any given device are only known to the central server and the device transmitting the identifiers. These identifiers may change from time to time, making a user's or a device's identity anonymous over time. The central server and any particular device must be coordinated such that the identifier and any device transmitting it, remains identifiable by the central server. This process is coordinated between the wireless device, and the central server utilizing the WWAN or cellular data link, carrying messaging between them and using an identifier manager

1303 to maintain a list of device identifiers 1302 in a central but secure location. This is shown in more detail in Figure 13.

Referring to Figure 6, an example of using on IEEE802.11 link as the short range wireless capability is discussed. Generally, Wi-Fi devices operation in a so-called infrastructure mode which utilizes a BSS or basic service set. One component of a infrastructure network based wireless LAN is the use of a central access point or AP. In a mobile network the use of a central AP is not practical, as only the AP transmits an identifier, which does not meet the requirements of the preferred embodiment. The second topology for Wi-Fi networks is the so-called Ad-Hoc mode of operations, referred to as an independent basic service set or IBSS. In an IBSS all devices participating or advertising their interest in participating in an ad-hoc network transmit identifiers called beacons. These beacons contain the MAC address of the transmitting network adapter, the basic service set identifier (BSSID), and ad-hoc network name or service set identity (SSID). The BSSID in a typical ad-hoc network is generated by the first station to enter the BSSID and is locally administered, typically a randomly generated 48 bit number matching the format of a MAC address. In an ad-hoc network, each device 601, 602, 603 participating or desiring to participate transmits a beacon. There are several embodiments related using the IBSS beacons and the identifiers. First the identifier may be used as the MAC address of the station device or network adapter, and one or both the BSSID and the SSID may be used to indicate these particular beacons are associated with a service. In other embodiments, one or more of the BSSID and the SSID may be used as the identifier. In any of the embodiments for delivery of the identifier in an IBSS beacon, it is possible to coordinate the change of those identifiers with the server 100. As the MAC address is always broadcast in any operation of a Bluetooth or Wi-FI link, the use of a MAC address as an identifier provides for an additional level of security for the device 601, 602, 603, when identifier is changed from time to time as devices may be detected and identities tracked using a constant MAC address. In the preferred embodiment, where the MAC address is used for the identifier, all the devices participating would likely have the same network name

and SSID to aid in the identification of the device as being enabled, although not necessarily required. Examples using an 802.11 network in ad-hoc mode transmitting beacons are showed as messages 604, 605, and 606.

Chat Example between two mobile devices

Figure 7 shows an example of a message flow diagram for an embodiment where an individual is in a library for example, and a friend arrives. The individual is notified by their device receiving an identifier that their friend is present and they enter a chat session. Each person has a device (Figure 1, 106 and 108 respectively) that implements the preferred embodiments described above. The first individual associated with Device 1 (702) referred to as Entity 1 (EI1) performs a detection process as described in Figure 4, 5, and 6 previously (step 704) . The device identifier associated with Device 2 (703), DI2 is thereby detected. Device 1 (702) then transmits an inquiry message 705 using the WWAN (cellular data link such as GPRS, EDGE, 1xEV-DO, IS-2000, Wi-Max, LTE, or the like) to the server 701 inquiring if information related to the account and entity associated with DI2 is relevant, and available to the entity EI1 associated with Device 1 (702). The server 701 retrieves the account information related to EI1 and determines that EI2 is listed in a friends list in the account associated with EI1 and that EI1 should be notified when EI2 is detected. Next the server retrieves the account information associated with EI2 and determines that EI1 is on a list of entities which are allowed to be notified of EI2 being present and personal information such a the name of the individual, their phone number and the like. The server having determined that EI1 wants to be notified and is allowed to be notified responds in Step 706 to Device 1 (702) with a message indicating the DI2 is relevant to EI1 and including information such as Entity Identifier EI2 and associated details. A user application on Device 1 (702) notifies the user that the entity associated with Device 2 is in proximity in step 707. The user of Device 1 provides input to the device directing it to request a chat session with the entity associated with Device 2 (703), and a message 708 is sent the server 701 commanding “send ‘Hello’ to EI2”. The server acknowledges reception of the message with a “ACK” message 709, in return. Next

server 701 sends "Request Chat: 'Hello' from EI1" to Device 2 703. The user of Device 2 accepts the chat and returns a message "I'm by the front door" with message 711, sending it to the server to be relayed to device 1 (702).

E-commerce between two mobile devices

Figures 8A and 8B show a message flow diagram for an embodiment where two individuals are performing a financial transaction on the street (for example, a customer and a street vendor). Each has a device (Figure 1, 106 and 108 respectively) enabled with the preferred embodiments described above. In this example, an individual's device would see a vendor and the vendor's device (enabled with the current invention) would notify them that the vendor was also enabled with a device supporting the identifier search and other protocols described above, as well as being capable of electronic payments. These steps are performed in the following way. In step 804 the customer's device 802 (Device 1) performs an identifier search process as previously described, and detects a device identifier 2 (DI2) sent from Device 2 (803) belonging to the merchant. Device 1 will send a message to the server 801 (also represented by 100 in Figure 1) using the WWAN (cellular data link such as GPRS, EDGE, 1xEV-DO, IS-2000, Wi-Max, LTE, or the like) 104 requesting information related to DI2 and its relevance to the entity related to device 1 802. The server 801 then determines the relevance of DI2 based on the account properties stored in the account associated with the consumer Device 1. In this case, the account settings only allow messages from or notifications of entities on a friends list stored in the account record (represented in Figure 10) associated with the consumer. Server 801 responds to device 802 with "no" indicating that DI2 is not relevant to the Consumer.

The customer, having an account enabled with electronic payments, and wanting an item the vendor has, would press a button or make other input to his phone (or other device) which would indicate they would like to make a purchase and pay using their device (808). In this case the input selection would be "search for merchants." The customer's device would then send a message (809) to the central

server directing the server to perform a one time search for merchants, despite the current account settings. In one embodiment, the server would then direct the consumer's device 802 to initiate another search (809). Other embodiments may not include the server commanding Device 1 (802) to perform the search, but rather the search may be performed automatically, or use results from a recent search. In Step 811, Device 1 (802) performs another search and detects the identifier from Device 2 (803), DI2. Device 1 then sends a message 812 to the server again requesting information for all relevant devices detected, which will include at least DI2. In Step 813 the server, having received the request and list including DI2, looks up account information associated with DI2 and determines that the associated entity is a merchant. As the settings of the account associated Device 1 now allow for the notification of the user when a merchant is detected in proximity, DI2 is determined to be relevant to Device 1 and the Entity 1 (EI1) should be notified. The server then sends a message 814 to Device 1 (802) stating merchant services are available in proximity with a list of available merchant's information including information related to the entity (EI2). The user of device 1, Entity 1 (EI1) then provides input in step 815, (pressing a soft key on a touch screen for instance), selecting the specific merchant EI2 to engage with in a transaction. Device 1 (802) will then send a message (816) to the server requesting a transaction with EI2 associated with Device 2 (803). The server (801) will then respond in this embodiment with a message 817 to Device 1 confirming receipt of the requested transaction and providing information to allow the EI1 associated with Device 1 to independently confirm the identity of EI2 associated with Device 2 (803). In this embodiment the identifying information can include the name of the merchant, the merchant's logo, a picture of the vendor, or their mobile shopping cart. In other embodiments, the picture may be of a specific unattended vending machine in the location it is currently operating. It may also include other information such as the address of the merchant in cases where a fixed store location is provided. As this particular merchant in this example is a street vendor, an address may not be used. GPS information stored in the account associated with Device 2 may be used as further confirmation in some instances. However, in this example, GPS coordinates are not be

available on Device 2 due to lack of capability, or Device 2 being indoors and without sufficient signal to determine a location. Further GPS information from Device 1 (802) may be used to provide further confirmation information. In this embodiment the photograph sent in message 817 shows a picture of the particular merchant and also his city issued business license in text and as a picture of where it is displayed on the cart. The consumer entity EI1 provides input to Device 1 in step 818 confirming the identity of EI2, the merchant entity associated with Device 2 (803). Device 1 then sends a message 819 to the server 801 confirming the identity of the merchant.

Server 801 then sends a message 820 to the merchant's device 803 notifying them of the request for a transaction with EI1. Device 2 (803) then indicates to the merchant that a customer with the capability and desire to pay electronically is in proximity. In step 821 the customer associated with Device 1 (802) places an order with the merchant associated with Device 2 (803) and a list of products to be purchased is generated and the merchant provides input to Device 2 (803) to proceed with a electronic transaction. In step 822 Device 2 performs a scan of identifiers and DI1 associated with device 1 (802) and the Consumer is detected. A request is sent to the server 801 with a list of identifiers which were detected to determine if any of them are relevant to the merchant. Note that while the merchant device 803, (and the merchant) have now been notified of the desire for EI1 to enter a transaction, they do not necessarily know the identifier for EI1 yet. In other embodiments, the identifier associated with EI1 and Device 1 (802) may be sent in message 819, and a confirmation that this identifier is detected during the scan process 821 may be performed at the device. In the preferred embodiment, further security may be provided by the having the server perform this function independently. The server performs this confirmation in step 824 may matching the device 1 identifier DI1 with the information stored in the account associated with Entity 1 (EI1) also referred to as the Consumer.

The server than generates a message 825 to Device 2 (803) indicating that EI1 is relevant, and the transaction participant is present. The message in the preferred embodiment can also include a picture of the Consumer. Additionally, the message

could also include other pictures of other individuals allowed to use this device for purchases. If more than one identifier was detected in step 822 and matched in step 824 to entities having requested transactions previously which are pending for that merchant, a list of information for each entity involved with a pending transaction request can be provided in message 825. The merchant then selects the correct consumer using the picture of that consumer, confirming the identity of the part to the transaction in step 826. The consumer information provided in message 825 in another embodiment may simply be the name of the customer and the merchant may either ask their name, or request identification such as a driver's license. In the preferred embodiment, where a picture is passed in message 825, it is not necessary that the individual's name be passed to the merchant for the merchant to be able to provide confirmation of the identity of the Consumer thus providing a level of anonymity to the transaction such as may be present when cash is used.

Following the confirmation by the merchant of the identity of the Consumer participating in the current transaction in step 826, Device 2 sends a message 827 to the server confirming the identity of the Consumer as Entity 1 (E1), and with information required for the transaction including the list of products to be purchased, their prices, the total price, and a request to charge E1 this total amount. Server 801 then confirms receipt of this message in step 828. The server then sends a message 829 to Device 1 requesting the Consumer to confirm the list of goods to be purchased and the total price to be paid. In step 830, the Consumer (Entity 1) reviews the list and amount to be paid and provides input to device 1 confirming the accuracy of the information and they the authorizing the server to pay. In step 832 the server charges E1 utilizing stored preferred charge card information, stored credit, or other payment methiod such as a PalPal™ user name (PayPal is a trademark of Ebay, Inc.) and password stored in the account associated with E1, and charges the consumer. In the case where a stored credit is used, the Consumer's account can be debited, and the credits not applied to the merchants account until a later step. In the case of a credit card, or PalPal™ transaction, the server provides payment to E2 (the merchant) utilizing information

stored in the account associated with Device 2. The server then indicates payment is made to the merchant, and instructing the merchant to deliver the goods with message 833. E2 (the Merchant) then provides the goods and provides input to Device 2 that the goods have been delivered in step 834. Message 835 is generated by Device 2 (803) to the server confirming product delivery, and acknowledging the receipt of the payment confirmation message 833. The server can then send message 836 requesting the Consumer to confirm they received the goods. If a confirmation is not received in response to this request, this information may later be used to settle any dispute that might arise. In step 837 the consumer confirms receipt of the products, and message 838 is generated to the server confirming the receipt of goods by the consumer. In Step 839 the server concludes the transaction by completing any steps required to credit the Merchant with the payment amount from the Consumer, if required. The server then sends a message 840 to the Merchant indication the transaction is complete, which is acknowledges in message 841. The Consumer is notified of the completed transaction with message 842, which is acknowledged with message 843.

Finally, the transaction details may be stored by the server, or sent to a thirdly party server for tracking spending habits of that account holder, or customers of that merchant allowing the merchant to track that specific customer's behavior and cater to them in the future with various specials delivered via email, or during their next visit via their device in the form of an electronic coupon. This process can be performed with a goal to help the merchant expose the customer to other products or services the merchant believes the customer might find desirable.

The present invention can be extended to facilitate other types of transactions as well. In one specific application, consider use of the invention to facilitate a transaction such as the rental of an automobile. A well known business called ZipCar ™, presently operating in several major urban areas in the United States, makes available a fleet of vehicles for shared use by their club members who pay a monthly fee plus a per use charge. Using the present invention, the club member would have a wireless device that serves as the "Consumer device" (Device 1) and the ZipCar vehicle would be

equipped with a wireless device serving as the "Merchant" device (Device 2). The consumer would walk up to an available ZipCar vehicle and, using their wireless device, start an initial exchange of identifiers with the desired Merchant device, for example, using the short range local wireless network. The Consumer device and/or Merchant device would send a message to an application running on the Server requesting that a person associated with an account for the Consumer be granted access to a specific vehicle (e.g., an "object") that is in the vicinity of and associated with the Merchant device. A set of confirmatory messages (such as to exchange access codes, to confirm the location of the vehicle, the per-use fee due, and payment for the same, etc.), are then typically also exchanged between the Consumer and the Merchant device with the assistance of the Server and the long range wireless network. Upon confirmation of the necessary transaction information, the Server sends a message to the Merchant device to unlock the vehicle requested (which may be sent over the second long range wireless network or a yet another network, such as a satellite network).

Example of a Mobile Device and a Broadcast Device.

Figure 9 shows a message flow diagram for an embodiment where an individual is in the presence of a broadcast device, such as for the museum example of Figure 2. As with Figure 2, the individual device 202 and the broadcast device 204 are present and enabled. In this example, an individual 902 is in a grocery store and their device 902 (Device 1) performs a scan for identifiers in step 904, as described previously. DI2 is detected having been transmitted from device 2 (903). Device 1 (902) sends a message to server 901 inquiring if DI2 is relevant to the entity associated with Device 1 and if the information associated with that device identifier (DI2) is available to be returned. In step 906, the server retrieves the accounts associated with both DI2 and Device 1 (EI1). The server detects that the entity associated with DI2 is an advertisement company, and that this device is a broadcast device only, and that there is an electronic coupon available for download to Device 1, and multimedia content available to be played if desired. Additionally, the account settings associated with EI1 allow for the notification of broadcast devices in proximity.

Server 901 then transmits a Response message 907 indicated the presence of the detected device and the content available. The device 902 requests input from the entity associated with the device 901 for permission to download the coupon, and the availability to play content such as video about how to prepare a recipe using the vendors product. In this case the individual associated with Device 1 accepts the content, and a message 909 is sent to the server accepting the content. Response message 910 begins the delivery of the content.

As previously mentioned, several key distinctions of this embodiment include that the user of device 902 may walk away out of range form the broadcast device 903 and continue to receive the content using their cellular link, or may choose to play the content at a later time having stored the detected like in a favorites list. Additionally, the content stored in the account associated with the broadcast device 2 (903) is relevant to the placement of the device and the products near it. Further, as the content is stored in the server 901 rather than in the broadcast device 903, the content may be updated, modified, or deleted at anytime. For example the server 901 knowing that the consumer has never been detected previously, may customize the electronic coupon to provide a deeper discount than a regularly detected consumer. In the case where the devices are used for electronic commerce as in Figure 8, knowledge of the user's past purchases may be used to induce the consumer to try a new product. Alternatively if the consumer is a regular purchaser a loyalty program may provide a coupon upon a particular number of repeated purchases.

Figure 10 is a processing flow chart performed by the server receiving a request from a device inquiring about the relevant and availability of information associated with detected device identifiers. In step 1001 the server is waiting for a request from a device. When a request is received in decision 1002, step 1003 is performed. In this step the account information associated with the requesting device is retrieved. In step 1004 the information associated with the accounts for each of the detected device identifiers is retrieved. In step 1005 the server performs a matching process between the policies of the requesting account and each of the policies for each account

associated with each detected device identifier. In step 1006 the information related to the matched policies for the associated entities will be sent to the requesting mobile device.

Just as in the previous example of an identifier being deemed relevant to a user based on a friends list, permission for disclosing a device's presence may require being on a friends list as well. For example, when a server receives an inquiry from a device with a list of identifiers, it may only respond with information for users associated with the identifiers that are on that device's friends list, and on each of the individual's friend lists as well. These friends' lists and policies can be stored within a user account which allows for disclosure of a user's presence only to individuals on this list, such as described in Figure 11 (to be described below.)

It is contemplated that the permissions not be an "all or nothing" decision, but that different classes of information may be assigned different permissions and mechanisms. An example of this might be a user's presence, identity, and cart services being made available to only one set of other accounts (or users), while the presence of an anonymous individual being made available to anyone, but with other classes services available such as multi-player games being treated differently. Additionally multiple contacts may be included in the account, each given customized permissions. An example can be that any user may be notified of an anonymous user or other information based on additional policies.

As only the server contains personal information, and performs the association of an account with a particular identifier, it can inherently enforce the security of the policies as a distinct advantage relative to true peer to peer services. In this way, the central server controls the process of passing information related to an account to a particular requesting device.

Figure 11 shows an example account record to be associated with an entity and at least one device. The columns of the account record can consist of a Record Index

which will be used to described the account, a Field which is a descriptive name for the contents stored in the record, and a Field Information Group Disclosure Policy Assignment List (PAL). The PAL provides rules for the disclosure of the information in the associated row in the Field column. The following list are possible PAL entries:

ALL:	may be disclosed to any requesting entity
EXPLICIT APPROVAL:	the Entity associated with the account must provide input approving the disclosure of the information
NONE:	Do not disclose this information to any other entity
M:	where M is a integer from 1 to N indicating a Information Group Disclosure Policy which may consist of a list of contacts, friends, groups, characteristics, and the like.

Most of the fields in Figure 11 are self explanatory and typical in the industry such as the account number, however a few fields are worth a clarifying discussion. The Device identifier is in record index 2, with a Identifier type in record 4. The identifier type can define what type of identifier the device associated with this account would use. Record index 10 is the Entity Type Field. This describes is the entity is a Merchant, Individual, or if the device associated with this account is a broadcast only device.

Referring now to Figure 12 a timing map reference for scanning times and dormant times for devices is shown. In one embodiment, it is desired that the power consumption and scan timing for the devices in a cellular network be reduced. Since the server and the WWAN is involved with all mobile devices, coordination of the broadcasting periods and the searching periods for the short range radios is possible. This can be based on a common reference time such as that provided by most cellular systems, any the time of day clocks inherently within mobile devices. This allows for

reduced power consumption and other resource consumption in the devices. If no coordination is achieved, then the short range receivers in each device must be scanning for transmitted identifiers much more often and for longer durations. Utilizing a common timing base, and the central server to notify the devices of a coordination approach for "active times" and "non-active times" and will allow for the devices to minimize the power consumption in the transmission of and scanning for identifiers. This approach also allows for synchronizing the update of each device's identifier (as described previously) to enhance anonymity and security, coordinated with the central server. The "non-active times" may be used as "boundaries" over which the changing identifiers may be updated. This update may be based on either direct communication with the server, or rule and algorithm based updates previously coordinated with the central server so as to minimize server messaging, but allowing the updates to remain synchronized to the server such that the device and the server are always associating the same identifier between them.

As will be recognized by an individual skilled in the area of information technology, the concept of a central server may well be implemented as a collection of servers to allow for load balancing, redundancy, and the like in a manor common to the information technology industry.

Figure 13 shows a diagram of functional blocks associated with the management of dynamically assigned device identifiers. The Server 1301 has an application agent called an Identifier Manager (1303) which has access to a pool of device identifiers (1302). The Identifier Manager monitors timing information and determines when it is time to update a particular device's identifier. This time may be a regular interval, or a random generated time period by an algorithm such as a pseudo-random sequence generator, or a combination of both. When it is time to update a device identifier, Manager 1303 retrieves a new identifier form the pool 1302. The pool of identifiers may be a list or range of identifiers, or generated algorithmically. The new identifier is stored in the account associated with the entity determined to require updating and a message sent to the device 1305 associated with that account commanding it to update

its device identifier with the new one. This messge is sent over the WWAN Data network 1304 such as IS-2000, HSPA, GPRS, IS-95, Edge, Wi-Max, and the like. All devices 1305 to 1307 will eventually all be updated in a similar manner. This update process does not disrupt ongoing communication and interaction between devices despite the update as the communications are preformed based on the identity of the entities following the detection of the device identifiers which are no longer utilized. This unique capability allows for the updating process to be implemented and not impact the applications being utilized concurrently.

Other example applications utilizing still other embodiments follow below.

Requiring the brokering of the communication via a central server can also allow a mobile device to receive information associated with a "broadcast only" device, such as in the museum example discussed previously. This is important, as such broadcast devices can enable a vast set of new applications built upon the infrastructure developed in this application, beyond the museum application. Some of these applications may involve an electronic commerce aspect, for example.

Electronic Commerce Applications

Ecommerce between a fixed broadcast device and a mobile device

Football stadium example

An embodiment of a transaction model, enabled by the infrastructure described above can be an event such as a concert, or sporting event (particularly when it is an indoor venue where no GPS is available). A number of the broadcast only devices are placed through out the seating areas. The devices are very short range, and only transmit intermittently and as a result may be battery powered and to remain active over a very long time period. Each device can be placed in a known location, in a predicable manner.

An attendee at the event has his or her device enabled with the identifier protocol and other embodiments described above. The device detects a broadcast device, and interacts over the internet with the server via the WWAN connection (as already described above). The server receives an indication of the broadcast device's identifier and the identifier of the account associated with the device which detected the broadcast device. The server retrieves content associated with the service provider's account and provide that content to the application on the requesting mobile device. The content may indicate that the venue has a product delivery service. The user may then press an indication on their device that they would like to see a menu or list of items for sale from the merchant(s) in the venue. The application on the user's device would then allow them to see a menu, for instance, and select items to purchase. The user then would be asked to confirm the purchase. The server would then indicate to the merchant that a user located near a specific broadcast device has ordered something. In this case, it is expected that a delivery fee could also be charged for the enhanced service. The server would facilitate the purchasing of the goods or services from the merchant and payment from customer's account, and provide confirmation to each. Such confirmation can include an electronic receipt provided to the customer, for user upon arrival of the delivery person of the good or service. The customer can then select an indication on their device confirming receipt of the good or service via the mobile device, thereby completing the transfer of funds and the transition. Optionally, the delivery person of the good or service may have an enabled mobile device as well. In this case the identifiers may be detected by the customer's device and reported to the server to confirm that the provider's delivery person was present. Further, the delivery person's device can be able to detect the broadcast device's identifier and reported to the server confirming the delivery person was in the correct area independently. Even further proximity confirmation may be achieved by the customer's device's transmitted identifier being detected by the delivery person's device and reported to the central server further confirming the physical proximity of the parties involved in the transaction. Upon arrival of the delivery person, the customer may be notified that the delivery person is looking for them, and has arrived. These cross confirmations can

allow for the central server evidence to justify payments both in completed transactions and in disputed or failed transactions. Further, the delivery person may receive a picture of the requesting customer assisting to identify the customer to whom the food is to be delivered. Once the customer is found, the delivery person can confirm the delivery of the good or service to the customer via the user input on their mobile device, and that confirmation being reported to the central server. The customer can have the option to report confirmation or denial of the reception of the product or service as well, as in the last example.

In another embodiment, the merchant device may be fixed, but have an internet connection (wireless or otherwise). Further, in some embodiments, the merchant may be an automated device such as a vending machine. In such a model, a customer may use their enabled cell phone to purchase an item such as a beverage from the machine without the need to insert currency into the machine. This can be accomplished by the customer's cell phone detecting the vending machine transmission of the identifier or visa-versa. Following the detection of either the customer's identifier by the vending machine, or the customer detecting the vending machine identifier, the respective device notifies the server, which in turn provides notification (assuming the account settings allow for notification) to the potential customer via their device. Assuming the customer selects to purchase an item from the vending machine using their account associated with their device, the customer may be presented a menu as in the example above. The customer may further be presented information to ensure the identity of the vending machine, such as a description of the machine, a machine identification number, or a (most likely) a picture of the machine where it is located. The customer can then confirm this is the machine they are interfacing with, and select to pay via their account. The customer may in one model select the item to dispense by input to their phone, or they may simply select to provide payment to the machine allowing them to make the selection manually as is the typical mode of operation today. The vending machine can then interact with the server via its own internet connection, and

participate in the transaction in a manner similar to the mode described above allowing for step by step confirmation as previously described.

Electronic opinion polling, tied to a known location.

In a much simpler example, such a capability might be used to tie a survey to a known location in such a way as to provide an e-coupon to the survey taker on their device in return for completion of the survey. Alternatively, this type of interaction can enable a very large crowd to interact with a Jumbo-Tron like display to provide input to polls or to participate in group activities. Users at different locations in a audience may form teams and interact with other teams for group activities.

Feature Summary of Preferred Embodiments

1. In a first embodiment:

One device is transmitting a wireless identifier using a wireless protocol capable of peer to peer communication;

The wireless identifier being associated with a specific account on a server connected to the internet;

A second device receiving the wireless identifier

The second device capable of communicating with the server over an internet connection;

The second device requesting information from the service associated with the first identifier

- The second device having a second identifier associated with a second account on the server; and/or

- The server providing different amounts of information related to the first account based on the parameters associated with one or both of the first and second accounts

The identifiers associated with the accounts being updated such that the identifiers would no longer be recognized as being associated with specific accounts without past or current interaction with the server ;

Using one or more of Cellular network timing information, and information form the central server to coordinate the broadcast and search times amongst the devices. (to reduce power and resource consumption); and/or

Data necessary to engage in an E-commerce transaction may be exchanged as well such as the identity verification such as via a picture and/or mutual identifier detection.

2. In a second embodiment,

A device is capable of operating two wireless protocols simultaneously, utilizing a first wireless protocol in the device to detect the proximity of another wireless device and using the second wireless protocol to communicate with a remote server, where:

a. One or more of the devices are mobile devices;
b. Where the first wireless protocol is a local, or personal area network wireless protocol such as 802.11, Bluetooth, UWB or other local connectivity protocol;
c. Where the first wireless capability used for detecting the presence of another device, or advertising the presence or a device;
d. Utilizing a wireless wide area data link from one or more of the wireless devices to, optionally:
    i. Connect to a central server;

ii. Perform user authorization functions;

iii. Perform download of information associated with account identifiers utilizing the short range wireless capability;

iv. Request forwarding of messages / packets to the other active account;

e. Utilizing the messaging with a mobile proximity based social networking capability; and optionally,

i. The messaging being performed via the WWAN; and/or

f. The server providing a centrally assigned user identity, with relationship brokering or identification capability.

3. In another embodiment,

A central serving capability is provided to mobile devices utilizing a wireless WAN connection to provide and exchange information between one or more application on one or more wireless devices and the central server where

- the information passed to the central server is collected by one wireless device from another wireless device via a separate local wireless reception from the other wireless device;
- the separate local wireless reception from the second wireless device contains information directly assigned by, derived from, or known to the central server associated with the identity of the second wireless device;
- this identity is related to certain information and preferences of an account holder associated with an application operating on the second wireless device;
- the application is operating on both wireless devices;

- the application operating on the first device also provides its own identifying information to the central server as well as detected identifiers from devices with applications on them;
- The central server contains account information registered to the applications running on each wireless device;
- The preferences associated with the account information also contain policies related to the disclosure of one account's stored information to other accounts and hence to their application on their devices;
- These policies including a classification of other accounts each classification having different policies some of these policies being one of:
    - no not allow notification of my presence
    - allow notification of my presence
    - disclose my name/ do not disclose my name
    - disclose age / do not disclose age
    - disclose personal details;
- Where an application running on each device can optionally perform point of sale transitions coordinated via the central server, over the WWAN, utilizing user input on each device as confirmation of successive steps in the transition;
- Further, where at least one of the confirmation steps additionally involves displaying an identifying picture related to one of the devices, on the other device;
- Additionally the server performing an authorization for the transition to a third party;
- Or, optionally, a device is interacting with a point of sale device to associate an itemized list of items with a detected second device;
- The service performing a confirmation with the application on the second device requiring user input that the bill of goods list is correct; and/or

- The server storing the information related to the second devices detected account identity and inventory in a database for later use

4. In still other embodiments, a device in the present invention has a wireless capability with no WWAN capability, but only with the ability to broadcast a unique identifier, and

- A central server stores having the broadcast device's details;
- And when the first device provides these detail to the server, authorized and current information about the broadcast device are provided to the first wireless device;
- Where this information optionally includes advertising information or information related to "e-coupons" for special offers for products or services; and/or
  - Where the content of the e-coupons might be customized based on the identity of the requesting device or account holder;
    - Where the content is further customized based on other information known by the server related to the user's account ; or
    - Where the other information is related to the user's past purchasing practices or previous requests; and/or
- A mobile device, upon detecting a broadcast device and if enabled to do so, will report that broadcast Id to the server over a WWAN, and retrieve the current content from the server associated with that device and:
  - Display it to the user on their device; or
  - Execute instructions associated with the information retrieved from the server.

5. In still further embodiments, a good or service delivery model utilizing the above described broadcast device, is placed in a known location, and further

a. A mobile device is for detecting the fixed device's identifier via the WPAM/WLAN;
b. The mobile device reporting this identifier and passing an identifier associated with itself, or the account associated with the user utilizing the device;
c. The server determining that the detected broadcast device is associated with the broadcast device with a known location;
d. The server further determining that the identifier is associated with a service, and further associated with an account or that service;
e. The server retrieving content associated with the service provider's account and providing that content to the application on the requesting mobile device;
f. Where that content may be a list of items for sale, services for sale, a opinion pole, food menu, or other menu style content which allows for user selection of items, which can be implemented in java code, xml, simple text, or other for example optionally including active code elements;
g. The application on the mobile device displaying the content to the user display with the itemized list of goods, services, or other selection items;
h. A user providing selection of one or more of the items, and confirming they wish to purchase said items, and take delivery at or near the location of the fixed broadcast device;
i. The server facilitating the purchasing of the goods or services from the merchant's account and the customer's account, and providing confirmation to each. Such confirmation including an electronic receipt

provided to the customer, for user upon arrival of the deliverer of the good to or service;

j. The customer confirming receipt of the good or service via the mobile device, thereby completing the transfer of funds and the transition; and/or

k. The deliverer of the good or service optionally having a mobile device and optionally:

   i. such that identifiers from that device may be detected by the customers device and reported to the server to confirm that the provider's delivery person was present;

   ii. such that the broadcast devices identifier is detected by the delivery person's mobile device and reported to the server confirming the deliver person was in the correct area

   iii. such that the customer's device's transmitted identifier is detected by the delivery persons device and reported to the central server further confirming the physical proximity of the parties involved in the transaction; and/or

   iv. The delivery person confirming the delivery of the good or service to the customer via the user input on their mobile device, and that confirmation being reported to the central server.

6. In another embodiment, a software program is arranged to operate at the application layer on a mobile device, which interfaces to a device driver interface:

- Using wi-fi 802.11 to perform a WLAN local connection protocol; or
- Using Bluetooth to perform the WLAN local connection;
- Where the device driver interface is an NDIS driver or the like;
- Using 1xEVDO, HSDPA, GPRS, EDGE or the like for a wide area WWAN interface;

- The application then providing the reported identifiers to a server, which will make decisions regarding a users interest in these detected identifiers, and policy regard privacy other identifiers;
    - The decision process optionally based on priority of the identifier, the class an identifier belongs to, a list the identifier is, or is not included on;
  - Based on the result of the action function,
  - Sending at least one detected identifier to the network, potentially with additional information from the action function, and retrieving information back from the server related to that identifiers' account information stored on that server;
  - The server then receiving a request from a device's application, with a detected identifier
    - The server examining both the requesting and the requested identifier's identity and making a policy decision regarding the release of the requested identifiers information related to their account;
    - The server in some cases providing a continuously or periodically changing account or device identifier to a specific application on a device to enhance the privacy of the identity of that device;
      - The changing of the identifier may be effected by a rule based generation local to the application, or may be downloaded from the server directly; and/or
      - The update of the identifier being synchronized to such that it is coordinated with predetermined scanning and broadcasting periods allowing for a known update boundary;

7. In still another embodiment, a method uses the mobile device's time of day derived from the network or other reference for

synchronizing a PAN/WLAN discovery and advertisement times to save battery life;

doing the same in a synchronized way among multiple devices;

while coordinating the timing information utilizing the WWAN and a central server available commonly to the devices, such as by

- Synchronizing identifier transmission timing to save power from WWAN network parameters obtained for the server;
- Coordinating any identifier updates to this same timing source; and/or
- Using a pool of identifiers available to the central server to assign identifiers to devices changing the identifiers at some time interval derived for the common time reference

8. In another embodiment,

A central server uses an identity manager to assign identifiers to devices using a WWAN cellular data link, and wherein

identifiers are occasionally changed

identifiers are assigned from a pool of identifiers available to the servers;

identifiers are used as 48 bit media access control (MAC) addresses of the short range wireless network adapter

identifiers are optionally used as

an SSID in a IBSS in IEEE-802.11 network beacons

a BSSID of the IEEE802.11 network adapter;

in a IEEE802.15.1 Inquiry Response Message as the BD_ADDR

a device name in a Bluetooth name response packet ; or

listed in a services list as provided in a LMP_features_req message or LMP_features_req_ext message for a Bluetooth device

While this invention has been particularly shown and described with references to example embodiments thereof, it will be understood by those skilled in the art that various changes in form and details may be made therein without departing from the scope of the invention encompassed by the appended claims.

CLAIMS

What is claimed is:

1. A method for operating a first wireless communication device comprising:

receiving a wireless identifier from a second wireless device using a peer-to-peer protocol;

connecting to a server using a wireless protocol different from the peer-to-peer protocol;

sending the received wireless identifier to the server; and

receiving further information from the server, the further information associated with an entity or object associated with the second wireless device, wherein the further information additionally includes a visual identification of an object or entity associated with the second device.

2. The method of claim 1 additionally comprising:

notifying a user of the first wireless device of the proximity of the second wireless device.

3. The method of claim 1 further comprising:

sending a message to the server, the message representing a request to forward a message to the first wireless device.

4. The method of claim 1 additionally comprising

sending a message to the server as part of a relationship brokering function coordinated by the server.

5. The method of claim 1 wherein the server further performs the steps of:

coordinating with an application running at least one of the of the first and second wireless devices, to perform a point of sale transaction utilizing user input received from at least one of the first and second wireless devices;

performing one ore more confirmations of steps of the transaction; and

wherein at least one confirmation step additionally comprises:

sending a message to one of the first or second wireless devices to cause the application to display an identifying picture related to one of the devices.

6. The method of claim 5 wherein both the first and second devices perform at least one confirmation step.

7. The method of claim 6 wherein the server further performs one or more of:

authorizing the transaction to a third party;

interacting with a point of sale application to associate an itemized list of items with a detected second device;

confirming with the application on the second device, thereby requiring user input that the bill of goods list is correct;

storing information related to a detected account identity of the second device; and/or

storing information relating to inventory in a database.

8. A first wireless communication device comprising:

a peer receiver, for receiving a wireless identifier from a second wireless device using a peer-to-peer protocol;

a server transmitter, for sending the received wireless identifier to a server; and

a server receiver, for receiving further information from the server, the further information associated with an entity or object associated with the second wireless device, wherein the further information additionally includes a visual identification of an object or entity associated with the second device.

9. The device of claim 8 additionally comprising:

a display, for notifying a user of the first wireless device of the proximity of the second wireless device.

10. The device of claim 8 wherein the server transmitter further sends a message to the server representing a request to forward a message to the second wireless device.

11. The device of claim 8 wherein the server transmitter further sends a message to the server as part of a relationship brokering function coordinated by the server.

12. The device of claim 8 wherein the server has a processor configured to:

coordinate with an application running at least one of the of the first and second wireless devices, to perform a point of sale transaction utilizing user input received from at least one of the first and second wireless devices;

perform one ore more confirmations of steps of the transaction; and

a device transmitter, for sending a message to one of the first or second wireless devices to cause the application to display an identifying picture related to one of the devices.

13. The device of claim 12 wherein both the first and second devices perform at least one confirmation step.

14. The device of claim 13 wherein the processor in the server:

authorizes the transaction to a third party;

interacts with a point of sale application to associate an itemized list of items with a detected second device;

confirms with the application on the second device, thereby requiring user input that the bill of goods list is correct;

stores information related to a detected account identity of the second device; and/or

stores information relating to inventory in a database.

ABSTRACT OF THE DISCLOSURE

Techniques for facilitating the exchange of information and transactions between two entities associated with two wireless devices when the devices are in close proximity to each other. A first device uses a first short range wireless capability to detect an identifier transmitted from a second device in proximity, ideally using existing radio capabilities such as Bluetooth (IEEE802.15.1-2002) or Wi-Fi (IEEE802.11). The detected identifier, being associated with the device, is also associated with an entity. Rather than directly exchanging application data flow between the two devices using the short range wireless capability, a second wireless capability allows for one or more of the devices to communicate with a central server via the internet, and perform the exchange of application data flow. By using a central server to draw on stored information and content associated with the entities the server can broker the exchange of information between the entities and the devices.

Figure 1

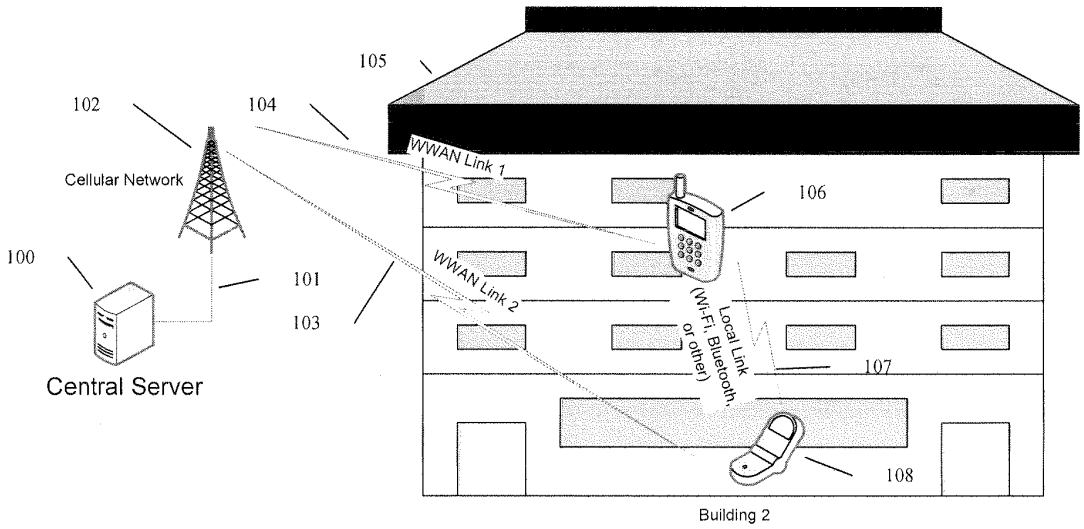
105
102
104
Cellular Network
WWAN Link 1
106
100
101
WWAN Link 2
103
Local Link
(Wi-Fi, Bluetooth,
or other)
107
Central Server
108
Building 2

Figure 2

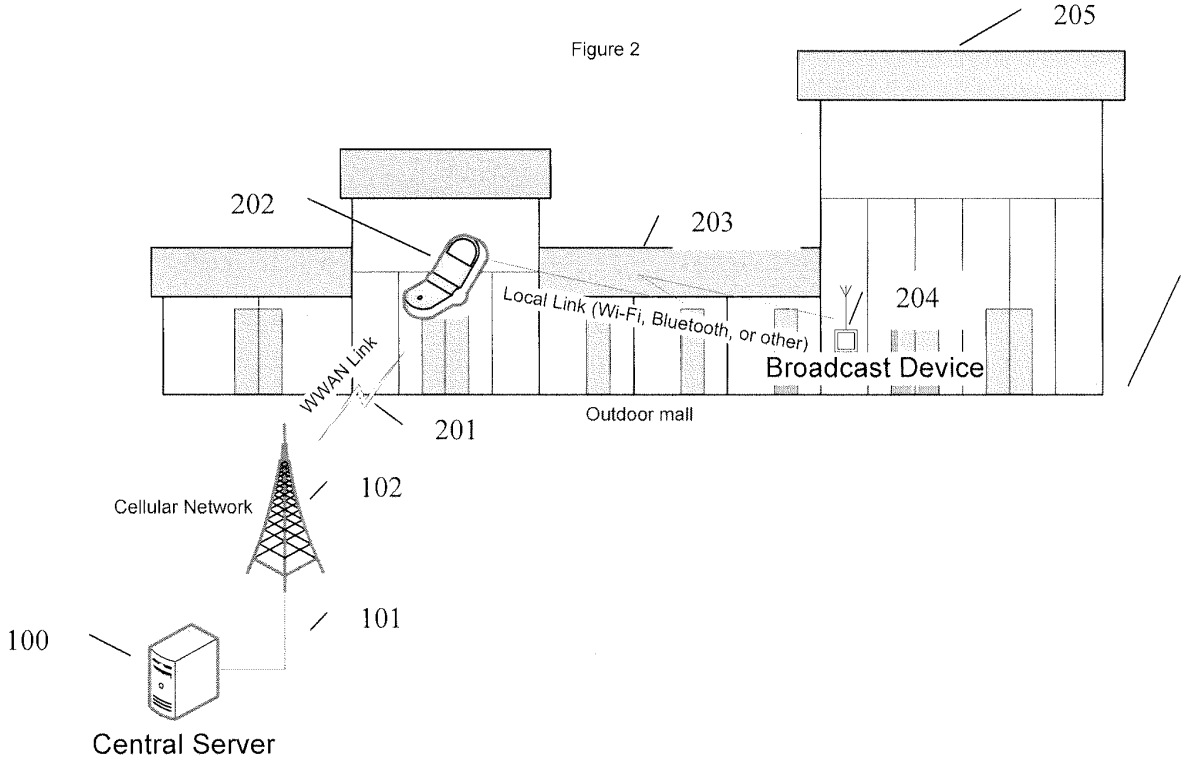
205
202
203
204
Local Link (Wi-Fi, Bluetooth, or other)
Broadcast Device
WWAN Link
201
Outdoor mall
Cellular Network
102
101
100
Central Server

Figure 3

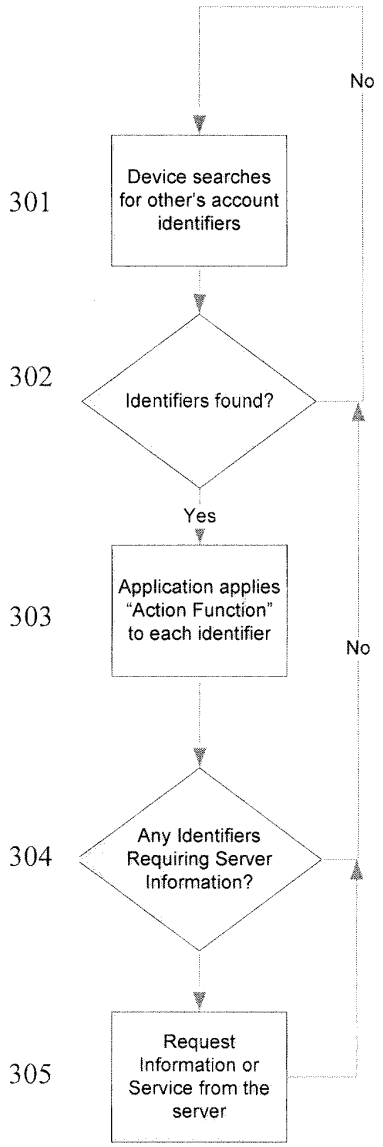
No
301
Device searches for other's account identifiers
302
Identifiers found?
Yes
303
Application applies "Action Function" to each identifier
No
304
Any Identifiers Requiring Server Information?
305
Request Information or Service from the server

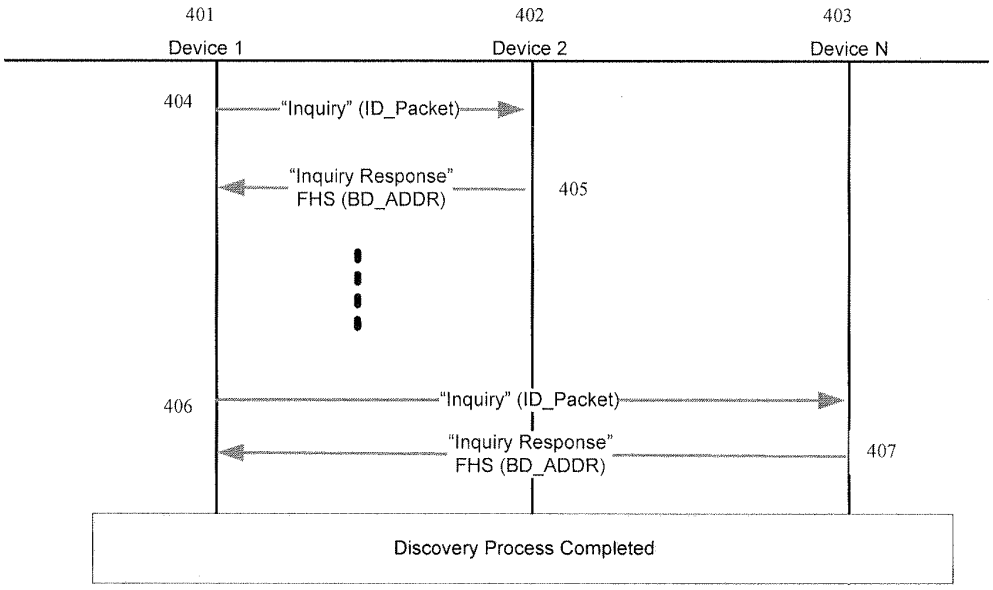

Figure 4 – 802.15.1-2002 (Bluetooth V1.2) Device Discovery

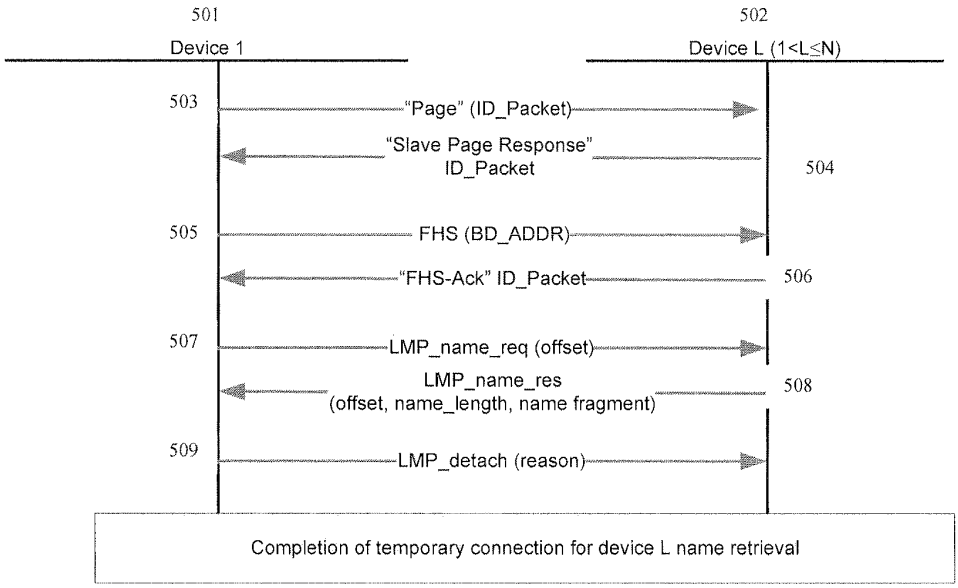

Figure 5 – 802.15.1-2002 (Bluetooth V1.2) Remote Name Request

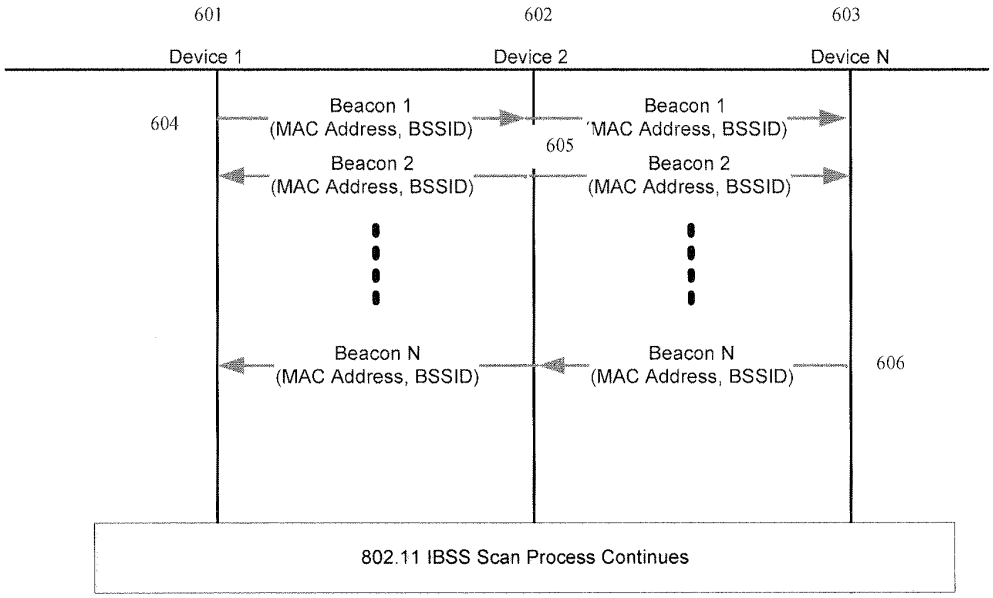

Figure 6 - 802.11 IBSS Beacon Process

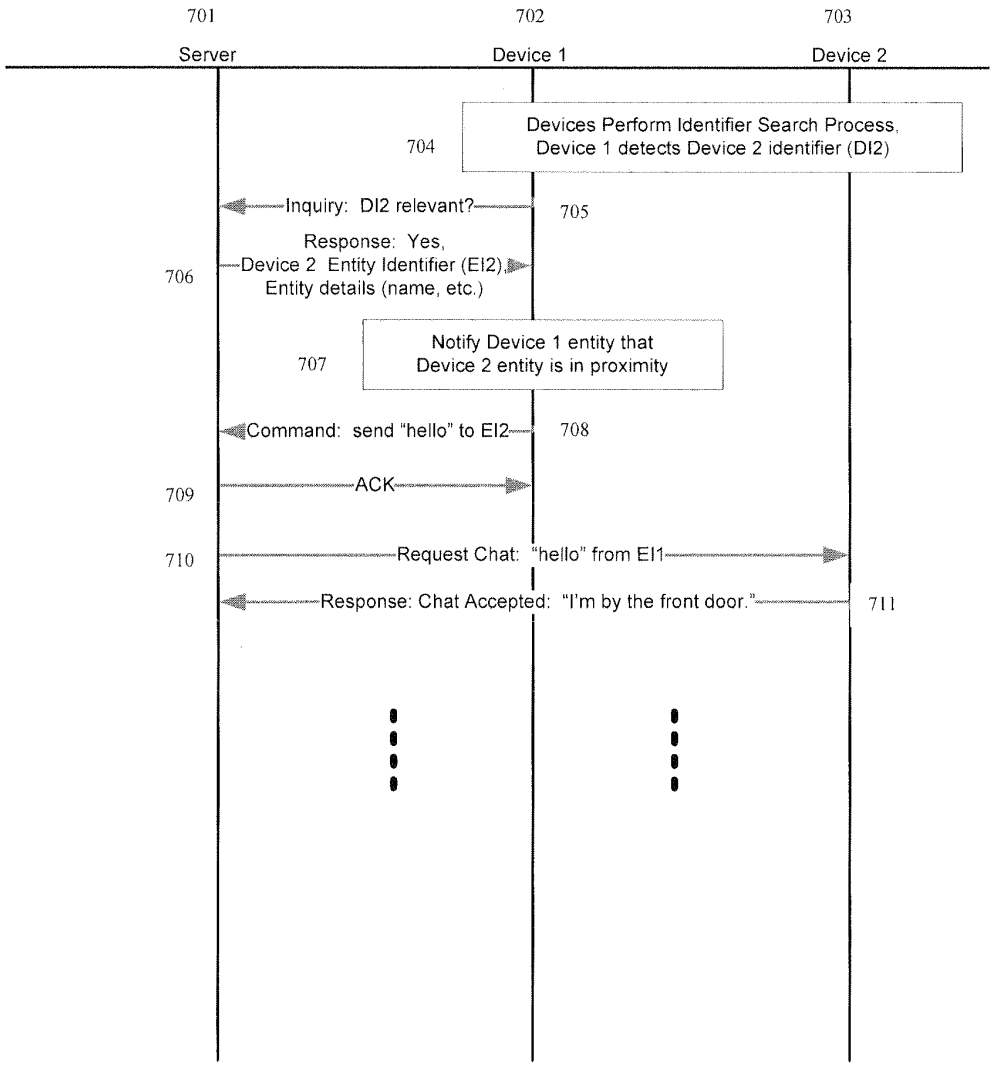

Figure 7 – Process of Detection and entering a Chat Session

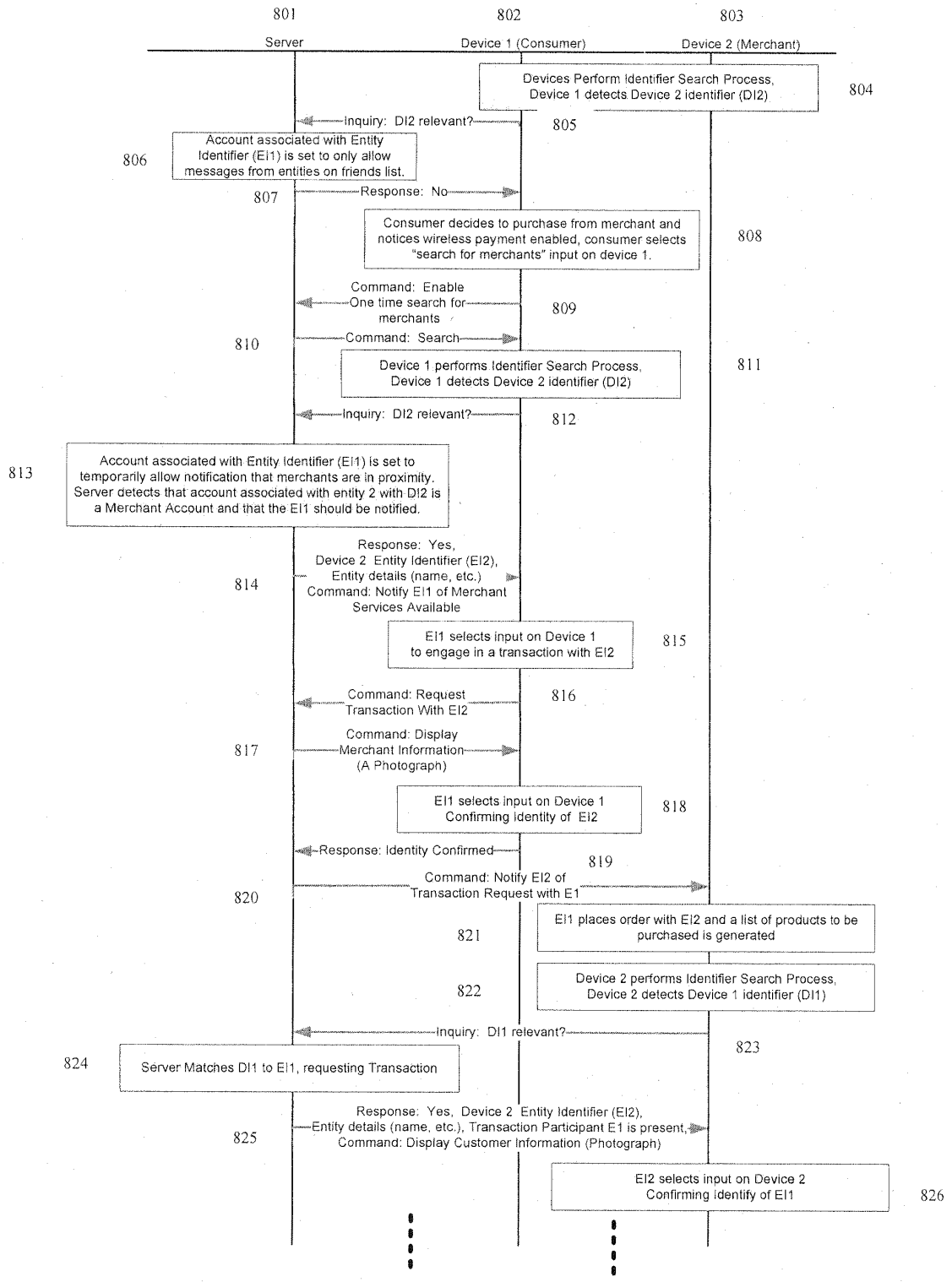

Figure 8A – E Commerce Process

Figure 8B – E Commerce Process Continued

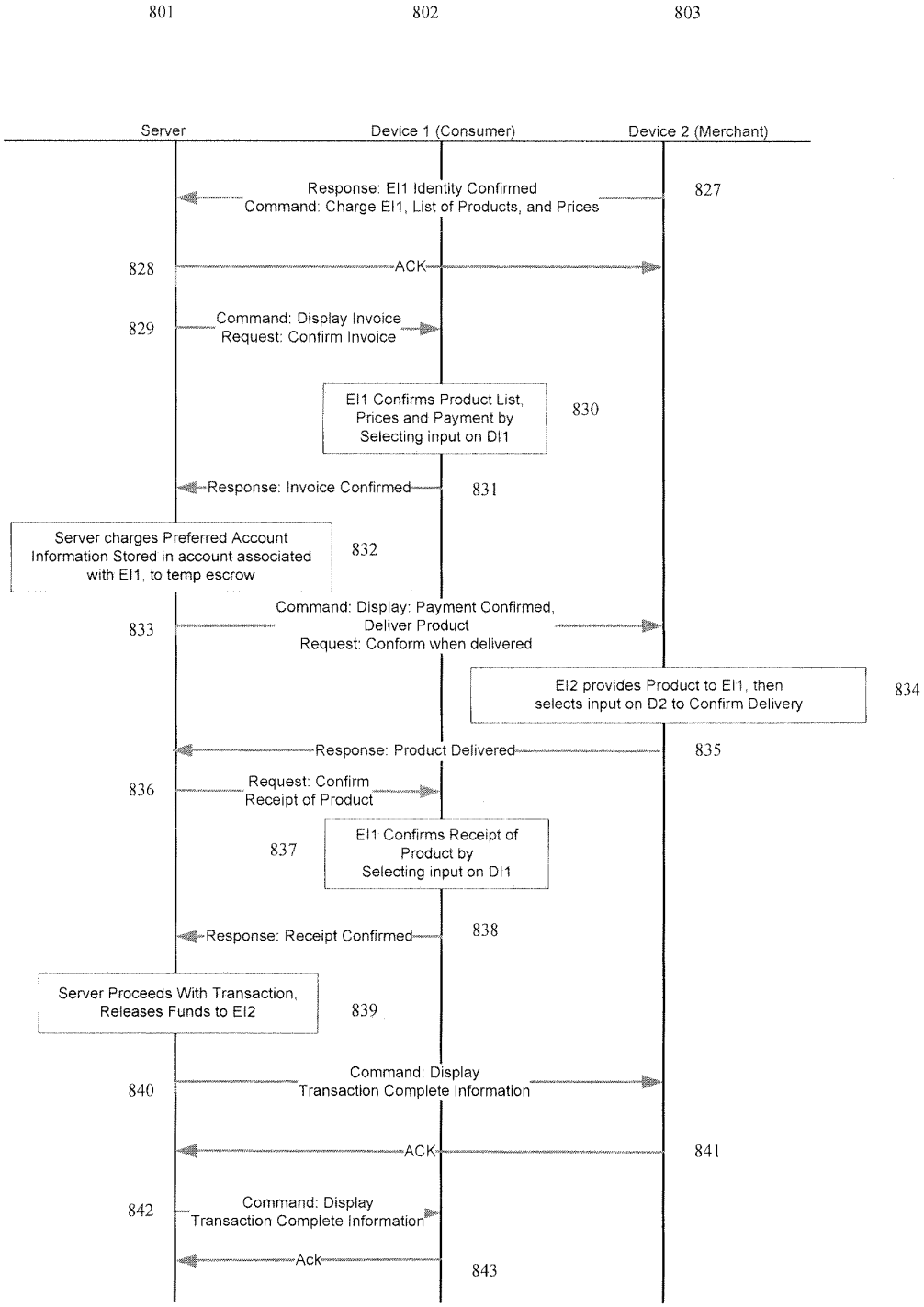

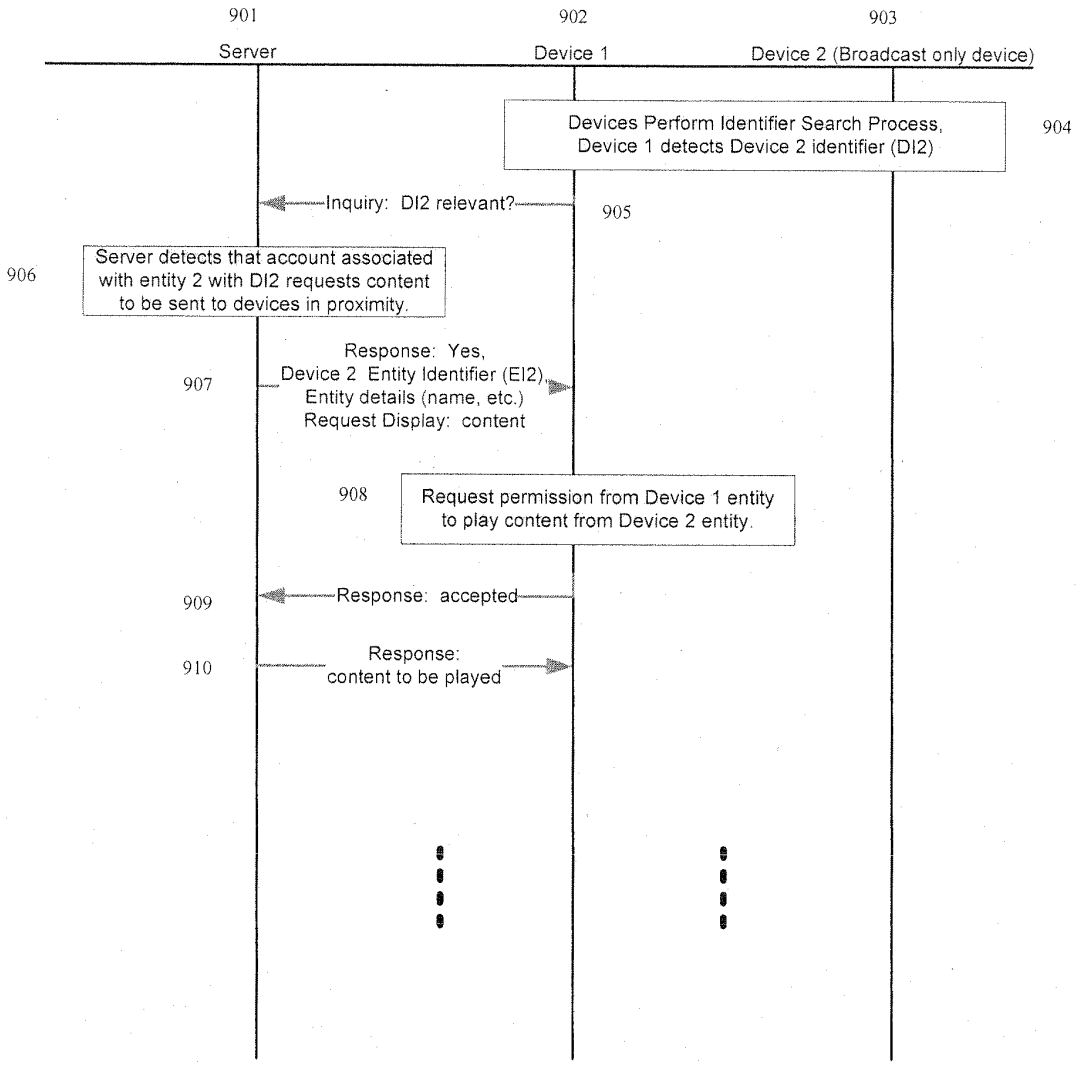

Figure 9 Broadcast and mobile device interaction

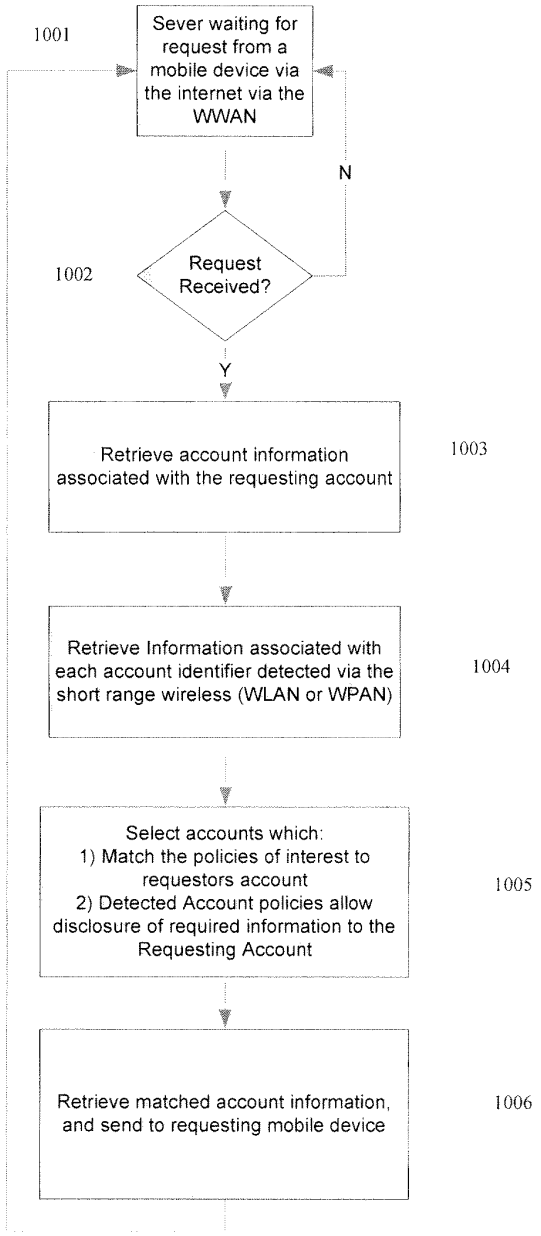

Figure 10 – Server Processing Example for Detected Device

Figure 11 – Example Individual Account Record associated with an Entity Stored in the Server

Record Index	Field	Field Information Group Disclosure Policy Assignments List
1	Account Number	[All, Explicit Approval, NONE, 1..N]
2	Identifier	
3	Identifier Type [Fixed MAC Address, Dynamic MAC Address, BSSID, Device Name]	
4	Number of Fields	
5	Field List	
6	Account User Name	NONE
7	Account Password	NONE
8	Entity Name	
9	Entity Address	
10	Entity Type [Individual, Merchant, Broadcast Entity]	
11	Billing Information	
12	Device Type	
13	Device IP Address	
14	Device SMS Phone Number	
15	Device Capabilities	
16	Entity AutoPlay Script 1	
17	Entity AutoPlay Script 2	
18	Detected AutoPlay Script 1	
19	Detected AutoPlay Script 2	
20	Entity Instant Message Address List	
21	Information Group Disclosure Policy 1 (IGDP#) [Characteristic 1 (C1), C2,.. CN, Friend List 1 (FL1), FL2, .. FLN, etc]	
22	Information Group Disclosure Policy 2	
23	Information Group Disclosure Policy 3	
24	Information Group Disclosure Policy 4	
25	Additional Personal Information Field 1 (APIF#) [Content Type/Content] (Picture, mp3, xml/AJAX, Text, Contact List, URL (MySpace, Facebook, Loopt), Login Credentials (MySpace, Facebook, Loopt, Itunes, etc.), Payment Information (Credit Card Information, PayPal Information, etc.), IM Credentials List (Username/Password))	
26	Additional Personal Information Field 2	
27	Additional Personal Information Field 3	
...		

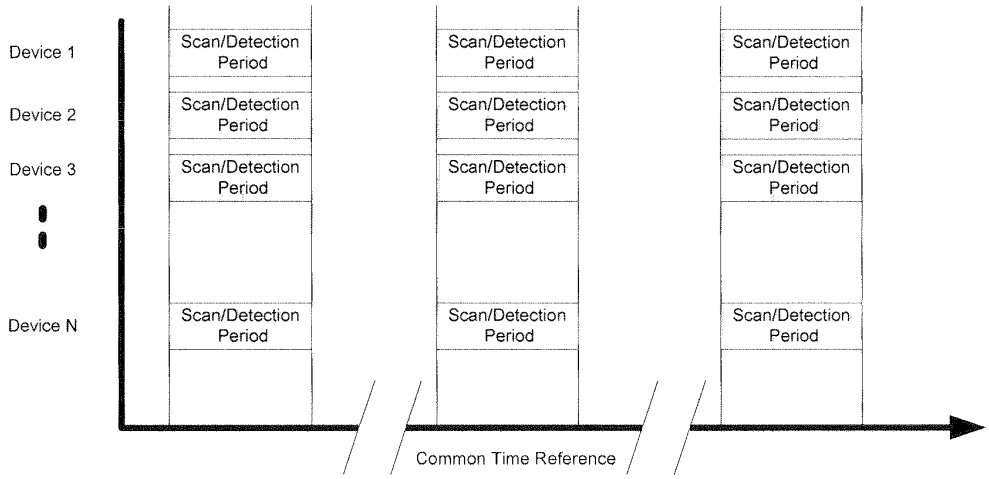

Figure 12 Use of common time reference for intermittent detection intervals

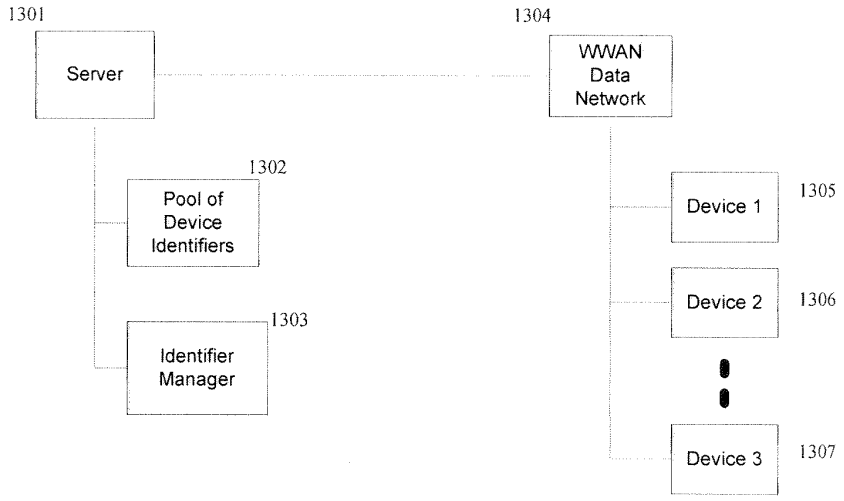

Figure 13 - Management of Device Identifiers by Identifier Manager in the Server

HAMILTON, BROOK, SMITH & REYNOLDS, P.C.

FEE TRANSMITTAL FOR PATENT APPLICATIONS	Attorney Docket Number	4394.1003-000
	Application Number	
	First Named Inventor	James Arthur Proctor, Jr.

CLAIM CALCULATION (includes any preliminary amendment)

CLAIMS	(1) FOR	(2) NUMBER FILED		(3) NUMBER EXTRA	(4) RATE		(5) CALCULATIONS	
	TOTAL CLAIMS (37 CFR 1.16(c) or (j))	14	– 20 =	0	X $ 52 =	X $ 26 =	$	0
	INDEPENDENT CLAIMS (37 CFR 1.16(b) or (i))	2	– 3 =	0	X$220 =	X $110 =	$	0
	MULTIPLE DEPENDENT CLAIMS (if applicable) (37 CFR 1.16(d))				+ $390 =	+ $195 =	$	
		BASIC FEE Paper or Electronic Filing - Large Entity Paper Filing - Small Entity Electronic filing - Small Entity					$	82
	APPLICATION SIZE FEE $270 for each add'l 50 sheets exceeding 100 **IF FILED ELECTRONICALLY:** Total No. Pages/Sheets X .75 (If a fraction remains, add 1 page to the total thereby including the fraction). Using the total after calculation, the fee is $270 for each additional 50 sheets over 100.	Specification: 46 Pages Drawings: 14 Sheets Sequence Listing: 0 pages Total No. Pages/Sheets **60**					$	0
		SEARCH FEE					$	270
		EXAMINATION FEE					$	110
	Surcharge - Late Filing of Declaration or Filing Fees (37 CFR 1.16(f)) =						$	
	Petition for Extension of Time Fee (37 CFR 1.17) =						$	
	Petition to Make Special Under 37 C.F.R. 1.102(c)(1)]						$	
	Assignment Recordation Fee = (only when filed with application)						$	
	TOTAL =						$	462.00

1. Small entity status:
   - a. ☒ A small entity statement is enclosed.
   - b. ☐ A small entity statement was filed in the prior non-provisional application and such status is still proper and desired.
   - c. ☐ Is no longer claimed.
2. ☒ Please charge any deficiency or credit any overpayment in the fees that may be due in this matter to Deposit Account No. 08-0380.
3. ☐ A check is enclosed for **$** . ☒ Please charge **$462.00** to Deposit Account No. 08-0380.
4. ☐ Other:

Signature	/David J. Thibodeau, Jr., Reg. No. 31,671/	Date	February 3, 2009
Submitted by Typed or Printed Name	David J. Thibodeau, Jr.	Reg. Number	31,671

864979_1 – September 15, 2008

STATEMENT CLAIMING SMALL ENTITY STATUS **DOCKET NUMBER: 4394.1003-000**
(37 CFR § 1.27(a)--PERSON

Applicant or Patentee: James Arthur Proctor, Jr. and James Arthur Proctor, III
Application or Patent No.:
Filed or Issued:
Title: VISUAL IDENTIFICATION INFORMATION USED AS CONFIRMATION IN A WIRELESS COMMUNICATION

I hereby state that I qualify as a person as defined in 37 CFR § 1.27(a)(1) for purposes of paying reduced fees to the Patent and Trademark Office described in:

- ☒ the specification filed herewith with title as listed above.
- ☐ the application identified above.
- ☐ the patent identified above.

I have not assigned, granted, conveyed, or licensed, and am under no obligation under contract or law to assign, grant, convey, or license, any rights in the invention to one or more parties who would not qualify as a person under 37 CFR 1.27(a)(1) or to any concern which would not qualify as a small business concern under 37 CFR 1.27(a)(2) or a nonprofit organization under 37 CFR 1.27(a)(3).

Each additional person, concern, or organization to which I have assigned, granted, conveyed, or licensed or am under an obligation under contract or law to assign, grant, convey, or license any rights in the invention is listed below:

- ☒ no such person, concern, or organization exists.
- ☐ each such person, concern, or organization is listed below.

Separate statements are required from each named person, concern, or organization having rights to the invention stating their status as small entities.

I acknowledge the duty to file, in this application or patent, notification of any change in status resulting in loss of entitlement to small entity status prior to paying, or at the time of paying, the earliest of the issue fee or any maintenance fee due after the date on which status as a small entity is no longer appropriate. (37 CFR 1.27(g)(2))

James Arthur Proctor, Jr.	James Arthur Proctor, III
NAME OF PERSON	NAME OF PERSON
Signature of Person	Signature of Person
1-30-2009	1/30/2009
Date	Date

864906_1

DOCKET NO. 4394.1003-000

IN THE UNITED STATES PATENT AND TRADEMARK OFFICE

Declaration for Patent Application

☐ Supplemental (37 CFR § 1.67)

As a named inventor, I hereby declare that:

My residence, mailing address and citizenship are as stated next to my name;

I believe I am the original, first and sole inventor (if only one name is listed) or an original, first and joint inventor (if plural names are listed in the signatory page(s) commencing at page 2 hereof) of the subject matter which is claimed and for which a patent is sought on the invention entitled

VISUAL IDENTIFICATION INFORMATION USED AS CONFIRMATION IN A WIRELESS COMMUNICATION

the specification of which:

☒ is attached hereto.

☐ was filed on [ ] as United States Application Number [ ].

☐ was filed on [PCT filing date] as PCT International Application No. [PCT Appl'n No.] [and assigned United States Application No. [ ]].

☐ and was amended on [ ] (if applicable).

I hereby state that I have reviewed and understand the contents of the above-identified specification, including the claims, as amended by any amendment referred to above.

I acknowledge the duty to disclose information which is material to patentability as defined in 37 CFR § 1.56, including for continuation-in-part applications, material information which became available between the filing date of the prior application and the national or PCT international filing date of the continuation-in-part application.

I hereby expressly authorize the filing of an International Patent Application under the Patent Cooperation Treaty which corresponds to and claims the priority of the above-identified application.

I hereby claim foreign priority benefits under 35 U.S.C. 119 or 365 of any foreign application(s) for patent or inventor's certificate, or of any PCT international application which designated at least one country other than the United States of America, listed below and have also identified below, by checking the box, any foreign application for patent or inventor's certificate, or of any PCT international application having a filing date before that of the application on which priority is claimed:

Prior Foreign Application(s)			Priority Not Claimed	Certified Copy Filed? YES	NO
(Number)	(Country)	(Day/Month/Year filed)	☐	☐	☐
(Number)	(Country)	(Day/Month/Year filed)	☐	☐	☐
(Number)	(Country)	(Day/Month/Year filed)	☐	☐	☐

I hereby declare that all statements made herein of my own knowledge are true and that all statements made on information and belief are believed to be true; and further that these statements were made with the knowledge that willful false statements and the like so made are punishable by fine or imprisonment, or both, under Section 1001 of Title 18 of the United States Code and that such willful false statements may jeopardize the validity of the application or any patent issued thereon.

Full name of **sole or first** inventor	James Arthur Proctor, Jr.		
Inventor's Signature			
Residence: City	State	Country	Citizenship
Melbourne Beach	Florida	U.S.A.	U.S.A.
Mailing Address (Business or Residential)			
Street or P.O. Box	258 Seaview Street		
City	State	ZIP	Country
Melbourne Beach	Florida	32951	U.S.A.

Full name of **second** joint inventor, if any	James Arthur Proctor, III		
Inventor's Signature			
Residence: City	State	Country	Citizenship
Indialantic	Florida	U.S.A.	U.S.A.
Mailing Address (Business or Residential)			
Street or P.O. Box	735 Oak Ridge Drive		
City	State	ZIP	Country
Indialantic	Florida	32903	U.S.A.

864921_1

PTO/SB/06 (12-04)

Filing Date: **02/03/09**

Approved for use through 7/31/2006. OMB 0651-0032
U.S. Patent and Trademark Office; U.S. DEPARTMENT OF COMMERCE

Under the Paperwork Reduction Act of 1995, no persons are required to respond to a collection of information unless it displays a valid OMB control number.

PATENT APPLICATION FEE DETERMINATION RECORD

Substitute for Form PTO-875

Application or Docket Number: 12/364,823

APPLICATION AS FILED – PART I

FOR	(Column 1) NUMBER FILED	(Column 2) NUMBER EXTRA	SMALL ENTITY RATE ($)	SMALL ENTITY FEE ($)	OR	OTHER THAN SMALL ENTITY RATE ($)	OTHER THAN SMALL ENTITY FEE ($)
BASIC FEE (37 CFR 1.16(a), (b), or (c))	N/A	N/A	N/A	82		N/A	
SEARCH FEE (37 CFR 1.16(k), (i), or (m))	N/A	N/A	N/A	270		N/A	
EXAMINATION FEE (37 CFR 1.16(o), (p), or (q))	N/A	N/A	N/A	110		N/A	
TOTAL CLAIMS (37 CFR 1.16(i))	14 minus 20 =		x$26		OR	x$52	
INDEPENDENT CLAIMS (37 CFR 1.16(h))	2 minus 3 =	*	x$110			x$220	
APPLICATION SIZE FEE (37 CFR 1.16(s))	If the specification and drawings exceed 100 sheets of paper, the application size fee due is $270 ($135 for small entity) for each additional 50 sheets or fraction thereof. See 35 U.S.C. 41(a)(1)(G) and 37 CFR						
MULTIPLE DEPENDENT CLAIM PRESENT (37 CFR 1.16(j))			195			390	
			TOTAL	462		TOTAL	

* If the difference in column 1 is less than zero, enter "0" in column 2.

APPLICATION AS AMENDED – PART II

		(Column 1) CLAIMS REMAINING AFTER AMENDMENT		(Column 2) HIGHEST NUMBER PREVIOUSLY PAID FOR	(Column 3) PRESENT EXTRA	SMALL ENTITY RATE ($)	SMALL ENTITY ADDI-TIONAL FEE ($)	OR	OTHER THAN SMALL ENTITY RATE ($)	OTHER THAN SMALL ENTITY ADDI-TIONAL FEE ($)
AMENDMENT A	Total (37 CFR 1.16(i))	*	Minus	**	=	x =		OR	x =	
	Independent (37 CFR 1.16(h))	*	Minus	***	=	x =		OR	x =	
	Application Size Fee (37 CFR 1.16(s))									
	FIRST PRESENTATION OF MULTIPLE DEPENDENT CLAIM (37 CFR 1.16(j))					N/A		OR	N/A	
						TOTAL ADD'T FEE		OR	TOTAL ADD'T FEE	

		(Column 1) CLAIMS REMAINING AFTER AMENDMENT		(Column 2) HIGHEST NUMBER PREVIOUSLY PAID FOR	(Column 3) PRESENT EXTRA	RATE ($)	ADDI-TIONAL FEE ($)	OR	RATE ($)	ADDI-TIONAL FEE ($)
AMENDMENT B	Total (37 CFR 1.16(i))	*	Minus	**	=	x =		OR	x =	
	Independent (37 CFR 1.16(h))	*	Minus	***	=	x =		OR	x =	
	Application Size Fee (37 CFR 1.16(s))									
	FIRST PRESENTATION OF MULTIPLE DEPENDENT CLAIM (37 CFR 1.16(j))					N/A		OR	N/A	
						TOTAL ADD'T FEE		OR	TOTAL ADD'T FEE	

* If the entry in column 1 is less than the entry in column 2, write "0" in column 3.
** If the "Highest Number Previously Paid For" IN THIS SPACE is less than 20, enter "20".
*** If the "Highest Number Previously Paid For" IN THIS SPACE is less than 3, enter "3".
The "Highest Number Previously Paid For" (Total or Independent) is the highest number found in the appropriate box in column 1.

This collection of information is required by 37 CFR 1.16. The information is required to obtain or retain a benefit by the public which is to file (and by the USPTO to process) an application. Confidentiality is governed by 35 U.S.C. 122 and 37 CFR 1.14. This collection is estimated to take 12 minutes to complete, including gathering, preparing, and submitting the completed application form to the USPTO. Time will vary depending upon the individual case. Any comments on the amount of time you require to complete this form and/or suggestions for reducing this burden, should be sent to the Chief Information Officer, U.S. Patent and Trademark Office, U.S. Department of Commerce, P.O. Box 1450, Alexandria, VA 22313-1450. DO NOT SEND FEES OR COMPLETED FORMS TO THIS ADDRESS. **SEND TO: Commissioner for Patents, P.O. Box 1450, Alexandria, VA 22313-1450.**

If you need assistance in completing the form, call 1-800-PTO-9199 and select option 2.

UNITED STATES PATENT AND TRADEMARK OFFICE

UNITED STATES DEPARTMENT OF COMMERCE
United States Patent and Trademark Office
Address: COMMISSIONER FOR PATENTS
P.O. Box 1450
Alexandria, Virginia 22313-1450
www.uspto.gov

APPLICATION NUMBER	FILING OR 371(C) DATE	FIRST NAMED APPLICANT	ATTY. DOCKET NO./TITLE
12/364,823	02/03/2009	James Arthur Proctor JR.	4394.1003-000

CONFIRMATION NO. 4791

FORMALITIES LETTER

OC000000034565794

21005
HAMILTON, BROOK, SMITH & REYNOLDS, P.C.
530 VIRGINIA ROAD
P.O. BOX 9133
CONCORD, MA 01742-9133

Date Mailed: 02/24/2009

NOTICE TO FILE CORRECTED APPLICATION PAPERS

Filing Date Granted

An application number and filing date have been accorded to this application. The application is informal since it does not comply with the regulations for the reason(s) indicated below. Applicant is given TWO MONTHS from the date of this Notice within which to correct the informalities indicated below. Extensions of time may be obtained by filing a petition accompanied by the extension fee under the provisions of 37 CFR 1.136(a).

The required item(s) identified below must be timely submitted to avoid abandonment:

- Replacement drawings in compliance with 37 CFR 1.84 and 37 CFR 1.121(d) are required. The drawings submitted are not acceptable because:
  - The drawings have a line quality that is too light to be reproduced (weight of all lines and letters must be heavy enough to permit adequate reproduction) or text that is illegible (reference characters, sheet numbers, and view numbers must be plain and legible) see 37 CFR 1.84(l) and (p)(1)); See Figure(s) 10 & 13.

Applicant is cautioned that correction of the above items may cause the specification and drawings page count to exceed 100 pages. If the specification and drawings exceed 100 pages, applicant will need to submit the required application size fee.

Replies should be mailed to:

Mail Stop Missing Parts
Commissioner for Patents
P.O. Box 1450
Alexandria VA 22313-1450

Registered users of EFS-Web may alternatively submit their reply to this notice via EFS-Web.
https://sportal.uspto.gov/authenticate/AuthenticateUserLocalEPF.html

For more information about EFS-Web please call the USPTO Electronic Business Center at **1-866-217-9197** or visit our website at http://www.uspto.gov/ebc.

If you are not using EFS-Web to submit your reply, you must include a copy of this notice.

/ltaba/

Office of Data Management, Application Assistance Unit (571) 272-4000, or (571) 272-4200, or 1-888-786-0101

UNITED STATES PATENT AND TRADEMARK OFFICE

UNITED STATES DEPARTMENT OF COMMERCE
United States Patent and Trademark Office
Address: COMMISSIONER FOR PATENTS
P.O. Box 1450
Alexandria, Virginia 22313-1450
www.uspto.gov

APPLICATION NUMBER	FILING or 371(c) DATE	GRP ART UNIT	FIL FEE REC'D	ATTY.DOCKET.NO	TOT CLAIMS	IND CLAIMS
12/364,823	02/03/2009	2617	462	4394.1003-000	14	2

CONFIRMATION NO. 4791

FILING RECEIPT

21005
HAMILTON, BROOK, SMITH & REYNOLDS, P.C.
530 VIRGINIA ROAD
P.O. BOX 9133
CONCORD, MA 01742-9133

OC000000034565793

Date Mailed: 02/24/2009

Receipt is acknowledged of this non-provisional patent application. The application will be taken up for examination in due course. Applicant will be notified as to the results of the examination. Any correspondence concerning the application must include the following identification information: the U.S. APPLICATION NUMBER, FILING DATE, NAME OF APPLICANT, and TITLE OF INVENTION. Fees transmitted by check or draft are subject to collection. Please verify the accuracy of the data presented on this receipt. **If an error is noted on this Filing Receipt, please submit a written request for a Filing Receipt Correction. Please provide a copy of this Filing Receipt with the changes noted thereon. If you received a "Notice to File Missing Parts" for this application, please submit any corrections to this Filing Receipt with your reply to the Notice. When the USPTO processes the reply to the Notice, the USPTO will generate another Filing Receipt incorporating the requested corrections**

Applicant(s)

James Arthur Proctor JR., Melbourne Beach, FL;
James Arthur Proctor III, Indiatlantic, FL;

Power of Attorney: None

Domestic Priority data as claimed by applicant

This appln claims benefit of 61/095,001 09/08/2008
and claims benefit of 61/095,359 09/09/2008

Foreign Applications

If Required, Foreign Filing License Granted: 02/13/2009

The country code and number of your priority application, to be used for filing abroad under the Paris Convention, is **US 12/364,823**

Projected Publication Date: To Be Determined - pending completion of Corrected Papers

Non-Publication Request: No

Early Publication Request: No
**** SMALL ENTITY ****

Title

VISUAL IDENTIFICATION INFORMATION USED AS CONFIRMATION IN A WIRELESS COMMUNICATION

Preliminary Class

455

PROTECTING YOUR INVENTION OUTSIDE THE UNITED STATES

Since the rights granted by a U.S. patent extend only throughout the territory of the United States and have no effect in a foreign country, an inventor who wishes patent protection in another country must apply for a patent in a specific country or in regional patent offices. Applicants may wish to consider the filing of an international application under the Patent Cooperation Treaty (PCT). An international (PCT) application generally has the same effect as a regular national patent application in each PCT-member country. The PCT process **simplifies** the filing of patent applications on the same invention in member countries, but **does not result** in a grant of "an international patent" and does not eliminate the need of applicants to file additional documents and fees in countries where patent protection is desired.

Almost every country has its own patent law, and a person desiring a patent in a particular country must make an application for patent in that country in accordance with its particular laws. Since the laws of many countries differ in various respects from the patent law of the United States, applicants are advised to seek guidance from specific foreign countries to ensure that patent rights are not lost prematurely.

Applicants also are advised that in the case of inventions made in the United States, the Director of the USPTO must issue a license before applicants can apply for a patent in a foreign country. The filing of a U.S. patent application serves as a request for a foreign filing license. The application's filing receipt contains further information and guidance as to the status of applicant's license for foreign filing.

Applicants may wish to consult the USPTO booklet, "General Information Concerning Patents" (specifically, the section entitled "Treaties and Foreign Patents") for more information on timeframes and deadlines for filing foreign patent applications. The guide is available either by contacting the USPTO Contact Center at 800-786-9199, or it can be viewed on the USPTO website at http://www.uspto.gov/web/offices/pac/doc/general/index.html.

For information on preventing theft of your intellectual property (patents, trademarks and copyrights), you may wish to consult the U.S. Government website, http://www.stopfakes.gov. Part of a Department of Commerce initiative, this website includes self-help "toolkits" giving innovators guidance on how to protect intellectual property in specific countries such as China, Korea and Mexico. For questions regarding patent enforcement issues, applicants may call the U.S. Government hotline at 1-866-999-HALT (1-866-999-4158).

LICENSE FOR FOREIGN FILING UNDER

Title 35, United States Code, Section 184

Title 37, Code of Federal Regulations, 5.11 & 5.15

GRANTED

The applicant has been granted a license under 35 U.S.C. 184, if the phrase "IF REQUIRED, FOREIGN FILING LICENSE GRANTED" followed by a date appears on this form. Such licenses are issued in all applications where

the conditions for issuance of a license have been met, regardless of whether or not a license may be required as set forth in 37 CFR 5.15. The scope and limitations of this license are set forth in 37 CFR 5.15(a) unless an earlier license has been issued under 37 CFR 5.15(b). The license is subject to revocation upon written notification. The date indicated is the effective date of the license, unless an earlier license of similar scope has been granted under 37 CFR 5.13 or 5.14.

This license is to be retained by the licensee and may be used at any time on or after the effective date thereof unless it is revoked. This license is automatically transferred to any related applications(s) filed under 37 CFR 1.53(d). This license is not retroactive.

The grant of a license does not in any way lessen the responsibility of a licensee for the security of the subject matter as imposed by any Government contract or the provisions of existing laws relating to espionage and the national security or the export of technical data. Licensees should apprise themselves of current regulations especially with respect to certain countries, of other agencies, particularly the Office of Defense Trade Controls, Department of State (with respect to Arms, Munitions and Implements of War (22 CFR 121-128)); the Bureau of Industry and Security, Department of Commerce (15 CFR parts 730-774); the Office of Foreign AssetsControl, Department of Treasury (31 CFR Parts 500+) and the Department of Energy.

NOT GRANTED

No license under 35 U.S.C. 184 has been granted at this time, if the phrase "IF REQUIRED, FOREIGN FILING LICENSE GRANTED" DOES NOT appear on this form. Applicant may still petition for a license under 37 CFR 5.12, if a license is desired before the expiration of 6 months from the filing date of the application. If 6 months has lapsed from the filing date of this application and the licensee has not received any indication of a secrecy order under 35 U.S.C. 181, the licensee may foreign file the application pursuant to 37 CFR 5.15(b).

UNITED STATES PATENT AND TRADEMARK OFFICE

Commissioner for Patents
United States Patent and Trademark Office
P.O. Box 1450
Alexandria, VA 22313-1450
www.uspto.gov

Hamilton, Brook, Smith & Reynolds, P.C.
530 Virginia Road
P.O. Box 9133
Concord, MA 01742-9133

MAILED

MAR 0 3 2009

OFFICE OF PETITIONS

In re Application of	:	
James Arthur Proctor, Jr. et al.	:	
Application No. 12/364,823	:	DECISION ON PETITION
Filed: February 3, 2009	:	TO MAKE SPECIAL UNDER
Attorney Docket No. 4394.1003-000	:	37 CFR 1.102(c)(1)
	:	

This is a decision on the petition under 37 CFR 1.102(c)(1), filed February 3, 2009, to make the above-identified application special based on applicant's age as set forth in M.P.E.P. § 708.02, Section IV.

The petition is **GRANTED**.

A grantable petition to make an application special under 37 CFR 1.102(c)(1) and MPEP § 708.02, Section IV: Applicant's Age must be accompanied by evidence showing that at least one of the applicants is 65 years of age, or more, such as a birth certificate or a statement by applicant. No fee is required

The instant petition includes a statement by the attorney of record on behalf of the applicant. Accordingly, the above-identified application has been accorded "special" status.

Telephone inquiries concerning this decision should be directed to Kimberly Inabinet at 571-272-4618.

All other inquiries concerning either the examination or status of the application should be directed to the Technology Center at 571-272-4000.

Upon completion of the pre-examination processing by the Office of Patent Application Processing, this application will be referred to Technology Center Art Unit 2617 for action on the merits commensurate with this decision.

Kimberly Inabinet
Petitions Examiner
Office of Petitions

883701_1
DJT/nzk
April 16, 2009

PATENT APPLICATION
Docket No.: 4394.1003-000

IN THE UNITED STATES PATENT AND TRADEMARK OFFICE

Applicant:	James Arthur Proctor, Jr. and James Arthur Proctor, III		
Application No.:	12/364,823	Group:	2617
Filed:	February 3, 2009	Examiner:	Not Assigned Yet

Confirmation No.: 4791

For: Visual Identification Information Used As Confirmation In A Wireless Communication

OIPE IAP34 APR 21 2009 PATENT & TRADEMARK OFFICE

CERTIFICATE OF MAILING OR TRANSMISSION

I hereby certify that this correspondence is being deposited with the United States Postal Service with sufficient postage as First Class Mail in an envelope addressed to Commissioner for Patents, P.O. Box 1450, Alexandria, VA 22313-1450, or is being facsimile transmitted to the United States Patent and Trademark Office on:

4-17-09 Nadine Z. Kush
Date Signature

Nadine Z Kush
Typed or printed name of person signing certificate

TRANSMITTAL OF REPLACEMENT DRAWINGS IN REPLY TO NOTICE TO FILE CORRECTED APPLICATION PAPERS

Mail Stop Missing Parts
Commissioner for Patents
P.O. Box 1450
Alexandria, VA 22313-1450

Sir:

In reply to the Notice to File Corrected Application Papers dated February 24, 2009, requesting submission of replacement drawings, please find enclosed 14 sheets of replacement drawings consisting of Figs. 1 through 13 for filing in the above-captioned application. A copy of the Notice is attached.

- ☐ Applicant hereby petitions to extend the time to respond to the Notice to Correct Application Papers dated [ ] for [ ] month(s) from [ ] to [ ].
- ☐ The appropriate fee of $[ ] is enclosed in the form of a check.
- ☐ Authorization is granted to charge Deposit Account No. 08-0380 for the petition fee due in this matter.

Please charge any deficiency or credit any overpayment in the fees that may be due in this matter to Deposit Account No. 08-0380.

Respectfully submitted,

HAMILTON, BROOK, SMITH & REYNOLDS, P.C.

By _____

David J. Thibodeau, Jr.
Registration No.: 31,671
Telephone: (978) 341-0036
Facsimile: (978) 341-0136

Concord, MA 01742-9133

Date: 4/16/09

O I P E IAP34
APR 2 1 2009
PATENT & TRADEMARK OFFICE

UNITED STATES PATENT AND TRADEMARK OFFICE

UNITED STATES DEPARTMENT OF COMMERCE
United States Patent and Trademark Office
Address: COMMISSIONER FOR PATENTS
P.O. Box 1450
Alexandria, Virginia 22313-1450
www.uspto.gov

APPLICATION NUMBER	FILING OR 371(C) DATE	FIRST NAMED APPLICANT	ATTY. DOCKET NO./TITLE
12/364,823	02/03/2009	James Arthur Proctor JR.	4394.1003-000

CONFIRMATION NO. 4791

FORMALITIES LETTER

21005
HAMILTON, BROOK, SMITH & REYNOLDS, P.C.
530 VIRGINIA ROAD
P.O. BOX 9133
CONCORD, MA 01742-9133

OC000000034565794

Date Mailed: 02/24/2009

NOTICE TO FILE CORRECTED APPLICATION PAPERS

Filing Date Granted

An application number and filing date have been accorded to this application. The application is informal since it does not comply with the regulations for the reason(s) indicated below. Applicant is given TWO MONTHS from the date of this Notice within which to correct the informalities indicated below. Extensions of time may be obtained by filing a petition accompanied by the extension fee under the provisions of 37 CFR 1.136(a).

The required item(s) identified below must be timely submitted to avoid abandonment:

- Replacement drawings in compliance with 37 CFR 1.84 and 37 CFR 1.121(d) are required. The drawings submitted are not acceptable because:
  - The drawings have a line quality that is too light to be reproduced (weight of all lines and letters must be heavy enough to permit adequate reproduction) or text that is illegible (reference characters, sheet numbers, and view numbers must be plain and legible) see 37 CFR 1.84(l) and (p)(1)); See Figure(s) 10 & 13.

Applicant is cautioned that correction of the above items may cause the specification and drawings page count to exceed 100 pages. If the specification and drawings exceed 100 pages, applicant will need to submit the required application size fee.

RECEIVED
HAMILTON, BROOK,
SMITH & REYNOLDS, P.C.

FEB 26 2009

ATTORNEY/IFC/IAC DJT
Docketed ✓ Already Docketed ____
Not Required ____
Initials 1st ____ Initials 2nd ____

Replies should be mailed to:

Mail Stop Missing Parts
Commissioner for Patents
P.O. Box 1450
Alexandria VA 22313-1450

Registered users of EFS-Web may alternatively submit their reply to this notice via EFS-Web.
https://sportal.uspto.gov/authenticate/AuthenticateUserLocalEPF.html

For more information about EFS-Web please call the USPTO Electronic Business Center at **1-866-217-9197** or visit our website at http://www.uspto.gov/ebc.

If you are not using EFS-Web to submit your reply, you must include a copy of this notice.

/Itaba/

Office of Data Management, Application Assistance Unit (571) 272-4000, or (571) 272-4200, or 1-888-786-0101

Figure 1

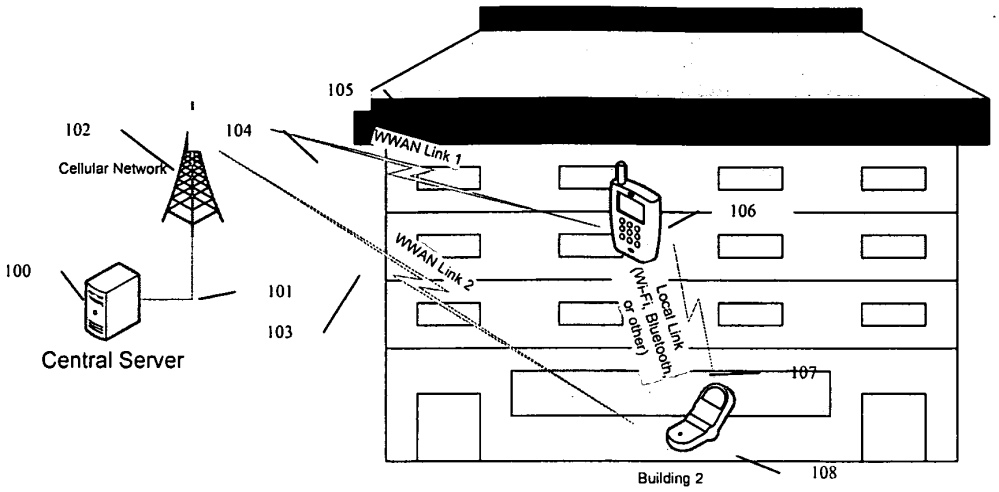
105
102
104
Cellular Network
WWAN Link 1
106
WWAN Link 2
100
101
103
Central Server
Local Link
(Wi-Fi, Bluetooth
or other)
107
Building 2
108

Figure 2

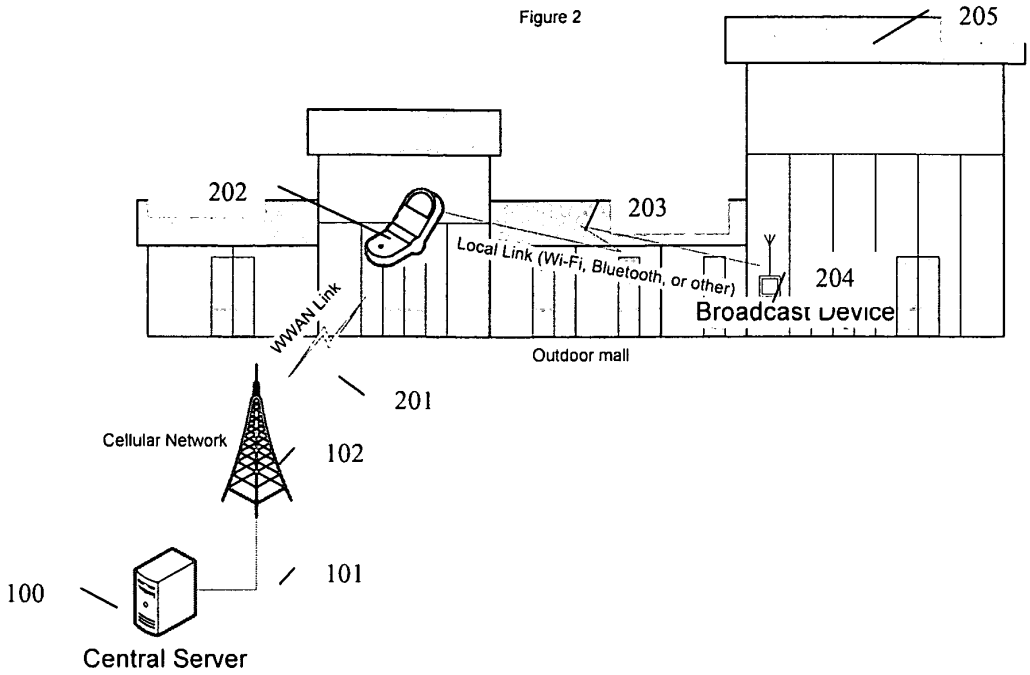
205
202
203
Local Link (Wi-Fi, Bluetooth, or other)
204
Broadcast Device
WWAN Link
Outdoor mall
201
Cellular Network
102
100
101
Central Server

Figure 3

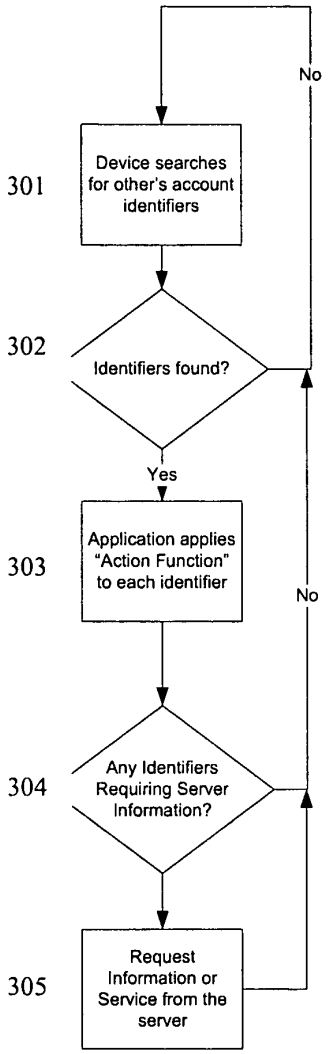
No
301
Device searches for other's account identifiers
302
Identifiers found?
Yes
303
Application applies "Action Function" to each identifier
No
304
Any Identifiers Requiring Server Information?
305
Request Information or Service from the server

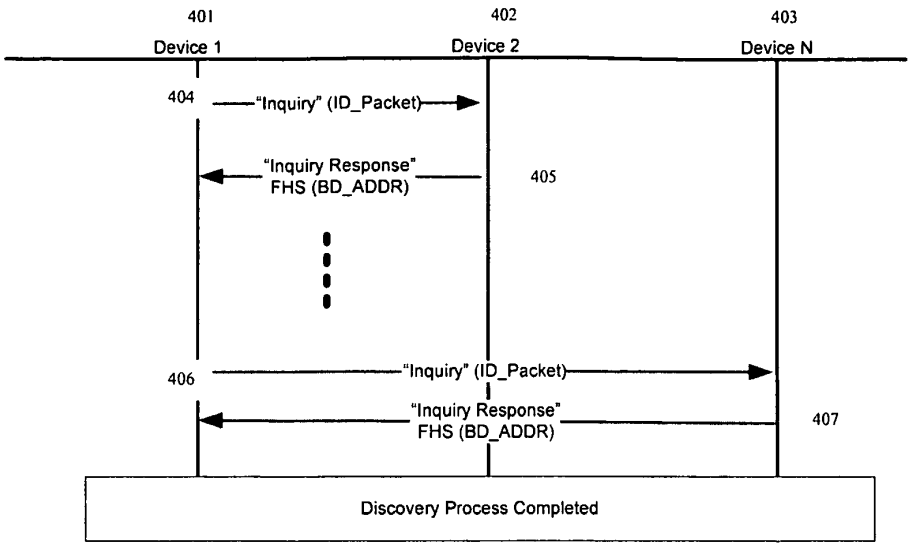

Figure 4 – 802.15.1-2002 (Bluetooth V1.2) Device Discovery

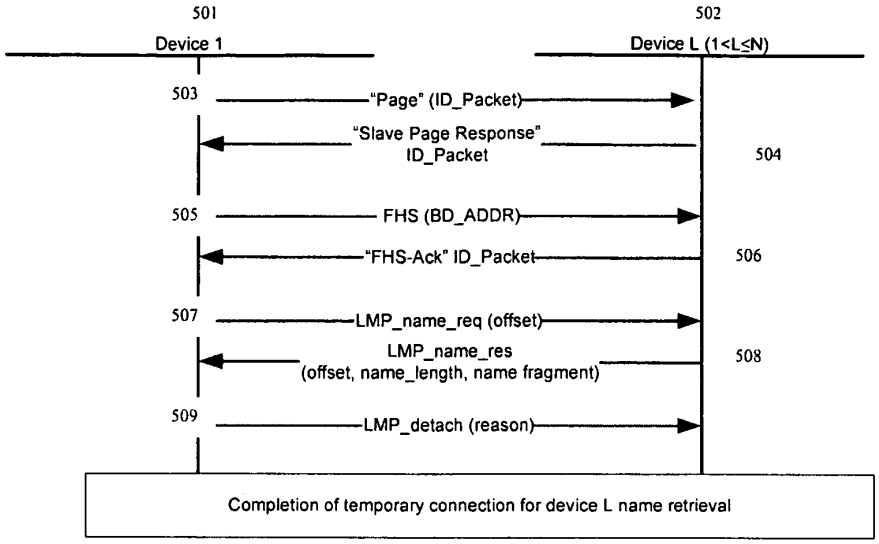

Figure 5 – 802.15.1-2002 (Bluetooth V1.2) Remote Name Request

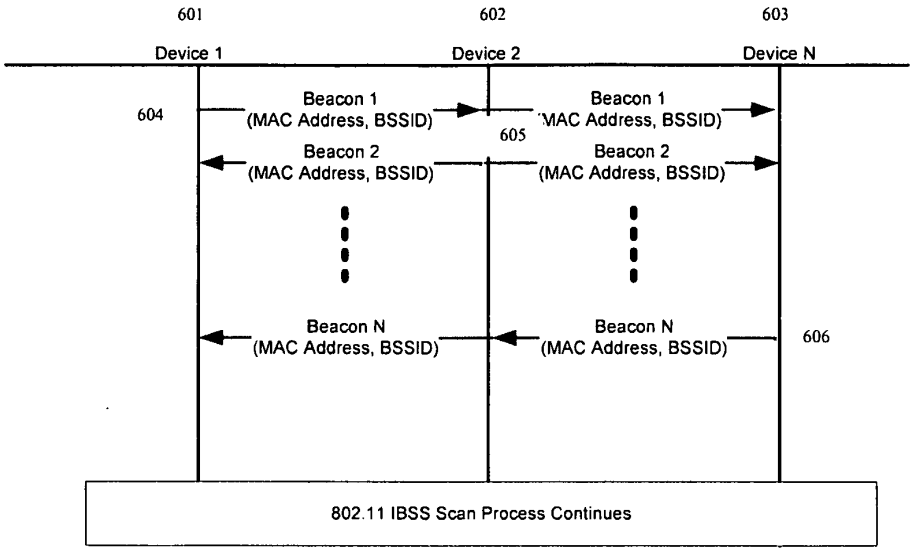

Figure 6 - 802.11 IBSS Beacon Process

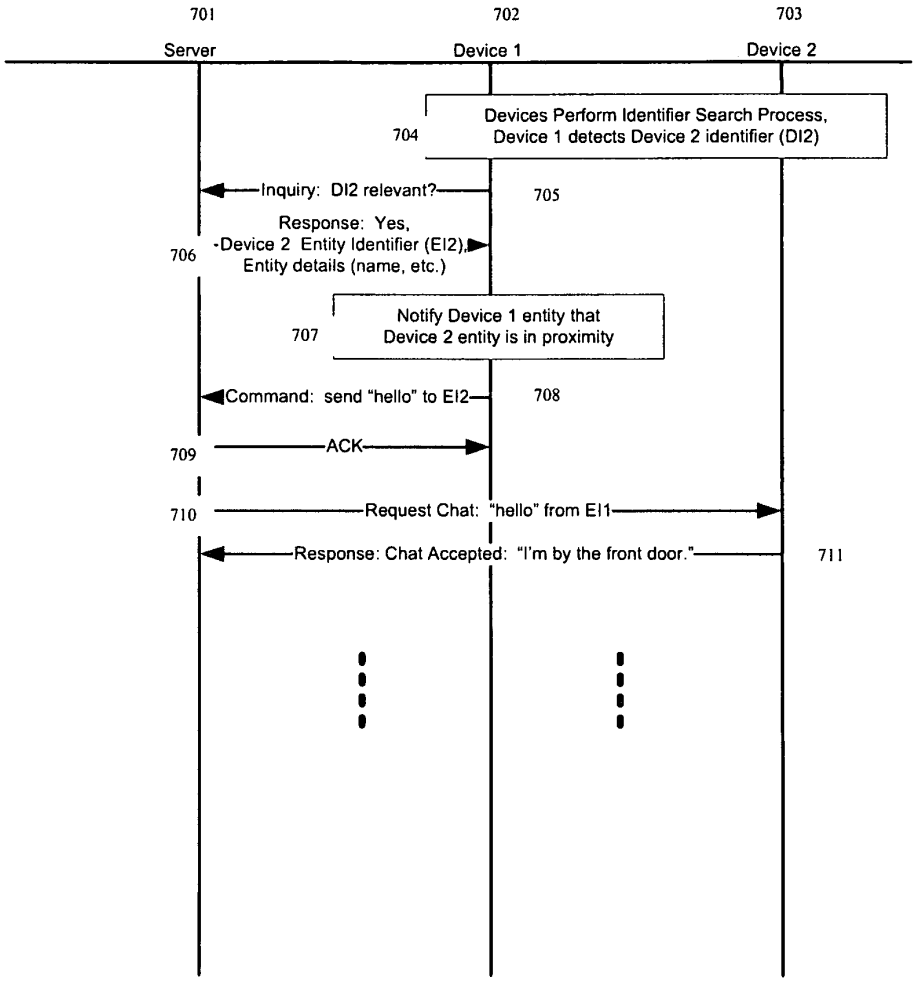

Figure 7 – Process of Detection and entering a Chat Session

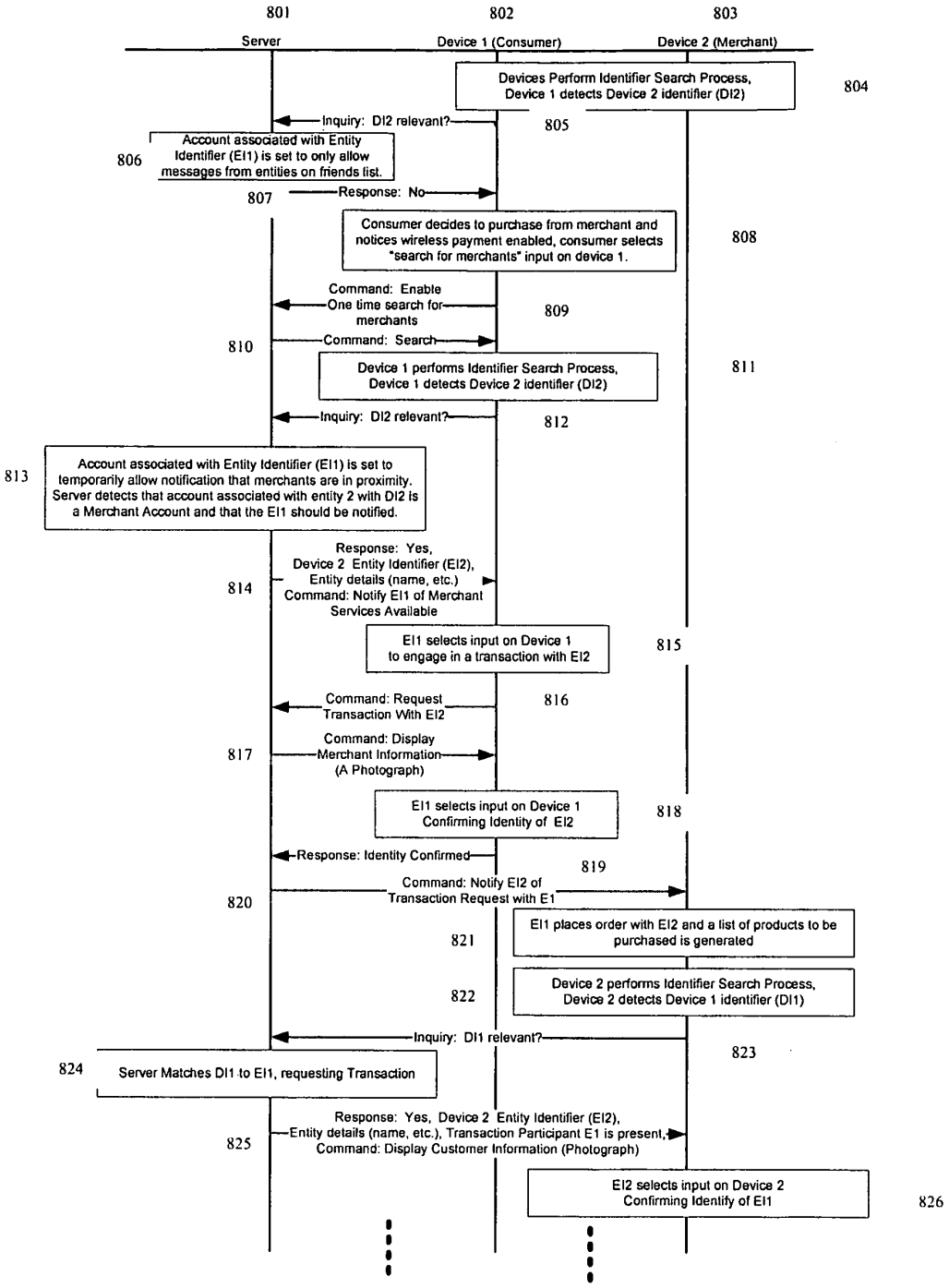

Figure 8A – E Commerce Process

Figure 8B – E Commerce Process Continued

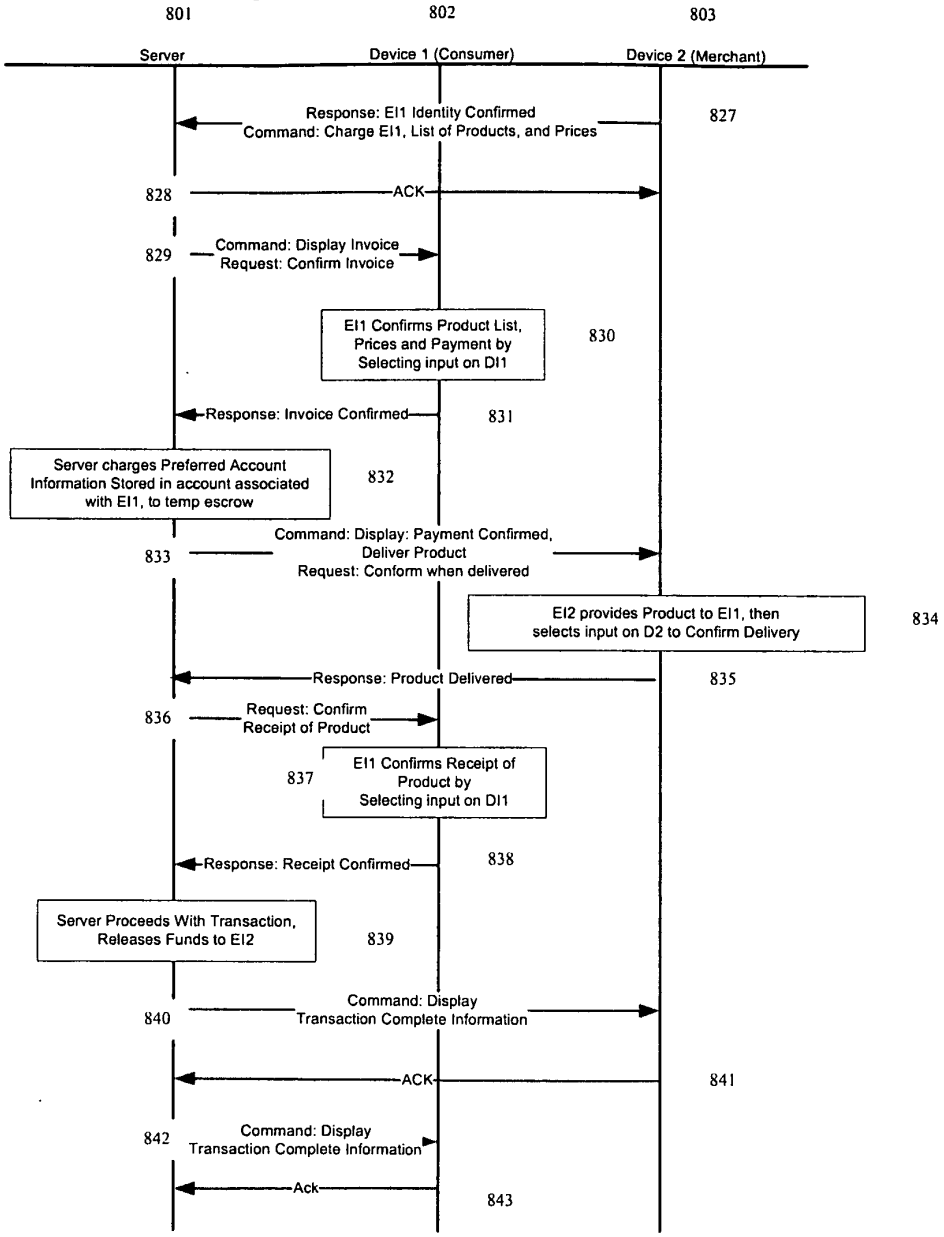

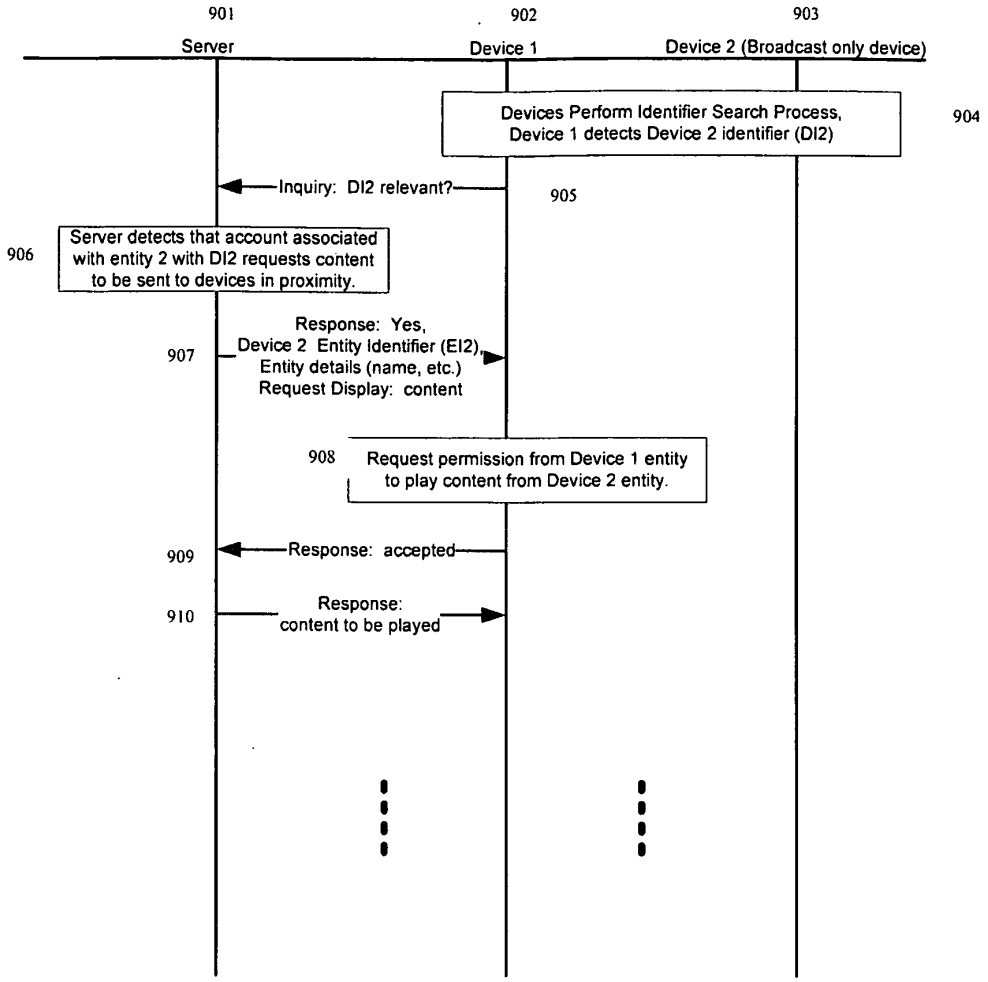

Figure 9 Broadcast and mobile device interaction

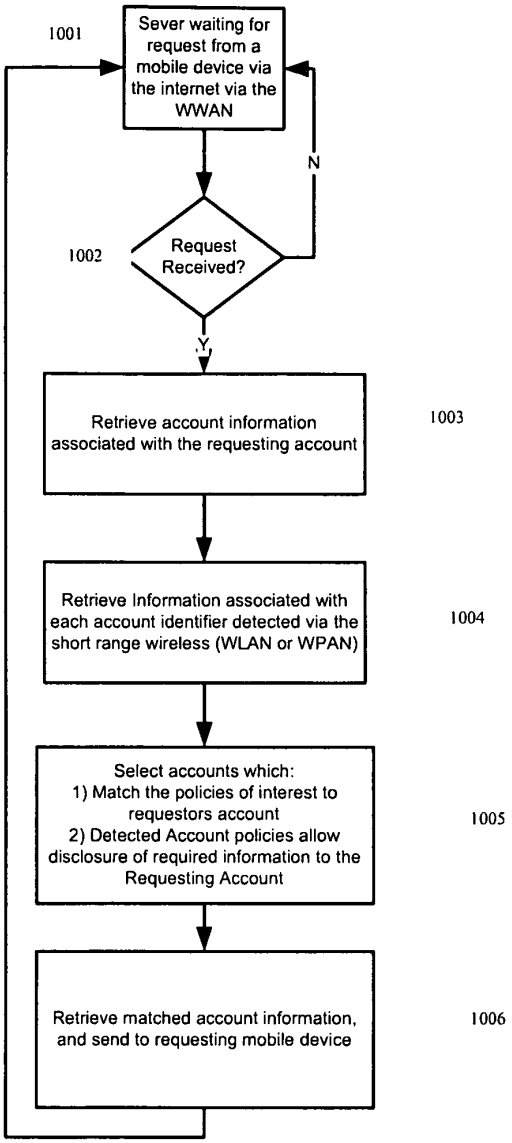

Figure 10 – Server Processing Example for Detected Device

Figure 11 – Example Individual Account Record associated with an Entity Stored in the Server

Record Index	Field	Field Information Group Disclosure Policy Assignments List
1	Account Number	[All, Explicit Approval, NONE, 1..N]
2	Identifier	
3	Identifier Type [Fixed MAC Address, Dynamic MAC Address, BSSID, Device Name]	
4	Number of Fields	
5	Field List	
6	Account User Name	NONE
7	Account Password	NONE
8	Entity Name	
9	Entity Address	
10	Entity Type [Individual, Merchant, Broadcast Entity]	
11	Billing Information	
12	Device Type	
13	Device IP Address	
14	Device SMS Phone Number	
15	Device Capabilities	
16	Entity AutoPlay Script 1	
17	Entity AutoPlay Script 2	
18	Detected AutoPlay Script 1	
19	Detected AutoPlay Script 2	
20	Entity Instant Message Address List	
21	Information Group Disclosure Policy 1 (IGDP#) [Characteristic 1 (C1), C2,.. CN, Friend List 1 (FL1), FL2, .. FLN, etc]	
22	Information Group Disclosure Policy 2	
23	Information Group Disclosure Policy 3	
24	Information Group Disclosure Policy 4	
25	Additional Personal Information Field 1 (APIF#) [Content Type/Content] (Picture, mp3, xml/AJAX, Text, Contact List, URL (MySpace, Facebook, Loopt), Login Credentials (MySpace, Facebook, Loopt, Itunes, etc.), Payment Information (Credit Card Information, PayPal Information, etc.), IM Credentials List (Username/Password))	
26	Additional Personal Information Field 2	
27	Additional Personal Information Field 3	
...		

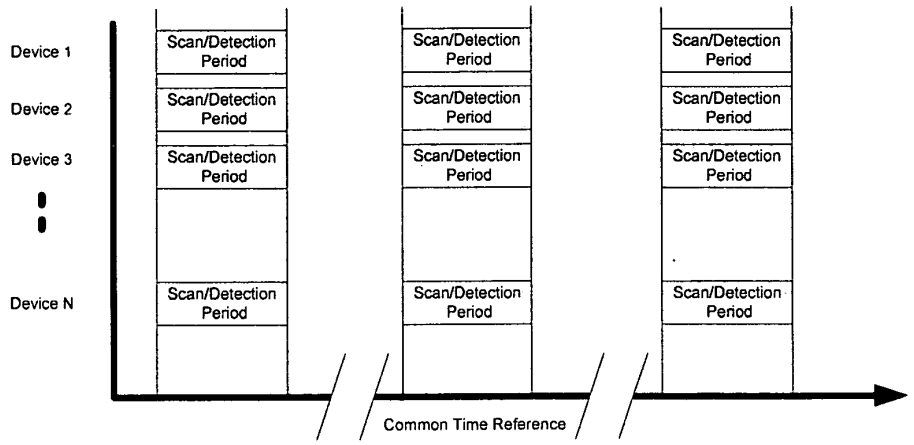

Figure 12 Use of common time reference for intermittent detection intervals

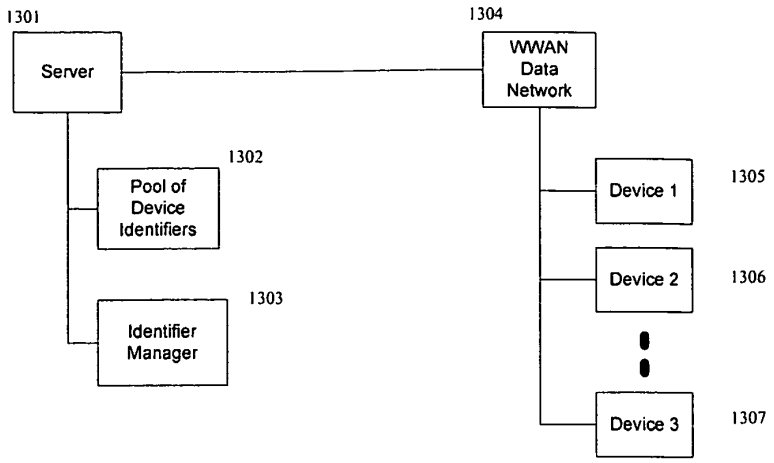

Figure 13 - Management of Device Identifiers by Identifier Manager in the Server

DocCode - SCORE

SCORE Placeholder Sheet for IFW Content

Application Number: **12364823** Document Date: **04/21/2009**

The presence of this form in the IFW record indicates that the following document type was received in paper and is scanned and stored in the SCORE database.

- Drawings

Images of the original documents are scanned in gray scale or color and stored in SCORE. Bi-tonal images are also stored in IFW. Defects visible in both IFW and SCORE are indicative of defects in the original paper documents.

To access the documents in the SCORE database, refer to instructions developed by SIRA.

At the time of document entry (noted above):

- Examiners may access SCORE content via the eDAN interface.
- Other USPTO employees can bookmark the current SCORE URL (http://es/ScoreAccessWeb/).
- External customers may access SCORE content via the Public and Private PAIR interfaces.

Form Revision Date: December 8, 2006

UNITED STATES PATENT AND TRADEMARK OFFICE

UNITED STATES DEPARTMENT OF COMMERCE
United States Patent and Trademark Office
Address: COMMISSIONER FOR PATENTS
P.O. Box 1450
Alexandria, Virginia 22313-1450
www.uspto.gov

APPLICATION NUMBER	FILING or 371(c) DATE	GRP ART UNIT	FIL FEE REC'D	ATTY.DOCKET.NO	TOT CLAIMS	IND CLAIMS
12/364,823	02/03/2009	2617	462	4394.1003-000	14	2

CONFIRMATION NO. 4791

UPDATED FILING RECEIPT

21005
HAMILTON, BROOK, SMITH & REYNOLDS, P.C.
530 VIRGINIA ROAD
P.O. BOX 9133
CONCORD, MA 01742-9133

OC000000035791303

Date Mailed: 05/07/2009

Receipt is acknowledged of this non-provisional patent application. The application will be taken up for examination in due course. Applicant will be notified as to the results of the examination. Any correspondence concerning the application must include the following identification information: the U.S. APPLICATION NUMBER, FILING DATE, NAME OF APPLICANT, and TITLE OF INVENTION. Fees transmitted by check or draft are subject to collection. Please verify the accuracy of the data presented on this receipt. **If an error is noted on this Filing Receipt, please submit a written request for a Filing Receipt Correction. Please provide a copy of this Filing Receipt with the changes noted thereon. If you received a "Notice to File Missing Parts" for this application, please submit any corrections to this Filing Receipt with your reply to the Notice. When the USPTO processes the reply to the Notice, the USPTO will generate another Filing Receipt incorporating the requested corrections**

Applicant(s)

James Arthur Proctor JR., Melbourne Beach, FL;
James Arthur Proctor III, Indiatlantic, FL;

Power of Attorney: None

Domestic Priority data as claimed by applicant

This appln claims benefit of 61/095,001 09/08/2008
and claims benefit of 61/095,359 09/09/2008

Foreign Applications

If Required, Foreign Filing License Granted: 02/13/2009

The country code and number of your priority application, to be used for filing abroad under the Paris Convention, is **US 12/364,823**

Projected Publication Date: 03/11/2010

Non-Publication Request: No

Early Publication Request: No
**** SMALL ENTITY ****

Title

VISUAL IDENTIFICATION INFORMATION USED AS CONFIRMATION IN A WIRELESS COMMUNICATION

Preliminary Class

455

PROTECTING YOUR INVENTION OUTSIDE THE UNITED STATES

Since the rights granted by a U.S. patent extend only throughout the territory of the United States and have no effect in a foreign country, an inventor who wishes patent protection in another country must apply for a patent in a specific country or in regional patent offices. Applicants may wish to consider the filing of an international application under the Patent Cooperation Treaty (PCT). An international (PCT) application generally has the same effect as a regular national patent application in each PCT-member country. The PCT process **simplifies** the filing of patent applications on the same invention in member countries, but **does not result** in a grant of "an international patent" and does not eliminate the need of applicants to file additional documents and fees in countries where patent protection is desired.

Almost every country has its own patent law, and a person desiring a patent in a particular country must make an application for patent in that country in accordance with its particular laws. Since the laws of many countries differ in various respects from the patent law of the United States, applicants are advised to seek guidance from specific foreign countries to ensure that patent rights are not lost prematurely.

Applicants also are advised that in the case of inventions made in the United States, the Director of the USPTO must issue a license before applicants can apply for a patent in a foreign country. The filing of a U.S. patent application serves as a request for a foreign filing license. The application's filing receipt contains further information and guidance as to the status of applicant's license for foreign filing.

Applicants may wish to consult the USPTO booklet, "General Information Concerning Patents" (specifically, the section entitled "Treaties and Foreign Patents") for more information on timeframes and deadlines for filing foreign patent applications. The guide is available either by contacting the USPTO Contact Center at 800-786-9199, or it can be viewed on the USPTO website at http://www.uspto.gov/web/offices/pac/doc/general/index.html.

For information on preventing theft of your intellectual property (patents, trademarks and copyrights), you may wish to consult the U.S. Government website, http://www.stopfakes.gov. Part of a Department of Commerce initiative, this website includes self-help "toolkits" giving innovators guidance on how to protect intellectual property in specific countries such as China, Korea and Mexico. For questions regarding patent enforcement issues, applicants may call the U.S. Government hotline at 1-866-999-HALT (1-866-999-4158).

LICENSE FOR FOREIGN FILING UNDER

Title 35, United States Code, Section 184

Title 37, Code of Federal Regulations, 5.11 & 5.15

GRANTED

The applicant has been granted a license under 35 U.S.C. 184, if the phrase "IF REQUIRED, FOREIGN FILING LICENSE GRANTED" followed by a date appears on this form. Such licenses are issued in all applications where

the conditions for issuance of a license have been met, regardless of whether or not a license may be required as set forth in 37 CFR 5.15. The scope and limitations of this license are set forth in 37 CFR 5.15(a) unless an earlier license has been issued under 37 CFR 5.15(b). The license is subject to revocation upon written notification. The date indicated is the effective date of the license, unless an earlier license of similar scope has been granted under 37 CFR 5.13 or 5.14.

This license is to be retained by the licensee and may be used at any time on or after the effective date thereof unless it is revoked. This license is automatically transferred to any related applications(s) filed under 37 CFR 1.53(d). This license is not retroactive.

The grant of a license does not in any way lessen the responsibility of a licensee for the security of the subject matter as imposed by any Government contract or the provisions of existing laws relating to espionage and the national security or the export of technical data. Licensees should apprise themselves of current regulations especially with respect to certain countries, of other agencies, particularly the Office of Defense Trade Controls, Department of State (with respect to Arms, Munitions and Implements of War (22 CFR 121-128)); the Bureau of Industry and Security, Department of Commerce (15 CFR parts 730-774); the Office of Foreign AssetsControl, Department of Treasury (31 CFR Parts 500+) and the Department of Energy.

NOT GRANTED

No license under 35 U.S.C. 184 has been granted at this time, if the phrase "IF REQUIRED, FOREIGN FILING LICENSE GRANTED" DOES NOT appear on this form. Applicant may still petition for a license under 37 CFR 5.12, if a license is desired before the expiration of 6 months from the filing date of the application. If 6 months has lapsed from the filing date of this application and the licensee has not received any indication of a secrecy order under 35 U.S.C. 181, the licensee may foreign file the application pursuant to 37 CFR 5.15(b).

O I P E IAP83
MAY 28 2009
PATENT & TRADEMARK OFFICE

1Fw

HAMILTON, BROOK, SMITH & REYNOLDS, P.C.

POWER OF ATTORNEY and CORRESPONDENCE ADDRESS INDICATION FORM

Application Number	12/364,823
Filing Date	February 3, 2009
First Named Inventor	James Arthur Proctor Jr.
Confirmation Number	4791
Group Art Unit	2617
Examiner Name	Not yet assigned
Attorney Docket Number	4394.1003-000

Title VISUAL IDENTIFICATION INFORMATION USED AS CONFIRMATION IN A WIRELESS COMMUNICATION

I hereby appoint

☒ Practitioners associated with **Customer No. 021005**

☐ Practitioner(s) named below:

as my/our attorneys/agents to prosecute the application identified above, including any continuation or divisional applications thereof, and to transact all business in the United States Patent and Trademark Office connected therewith.

Please recognize or change the correspondence address for the above-identified application to:

☒ Customer Number 021005
Hamilton, Brook, Smith & Reynolds, P.C.
530 Virginia Road
P.O. Box 9133
Concord, Massachusetts 01742-9133

☐ Other

Please direct all telephone calls and facsimiles to:
Name David J. Thibodeau, Jr., Esq. Tel. No. 978-341-0036 Fax No. 978-341-0136

I am the:

☒ Applicant/Inventor.

☐ Authorized representative of the Assignee, [ ], of the entire interest. See 37 CFR § 3.71. A Statement under 37 CFR § 3.73(b) is enclosed.

☐ Authorized representative of the Assignee, [ ], together with [ ], of the entire interest. A Statement under 37 CFR § 3.73(b) is enclosed.

SIGNATURE of Applicant or Assignee of Record

Signature	James Arthur Proctor III
Name	James Arthur Proctor, III
Date	5/2/2009

883750_1

OIPE IAP33
MAY 28 2009
PATENT & TRADEMARK OFFICE

HAMILTON, BROOK, SMITH & REYNOLDS, P.C.

POWER OF ATTORNEY and CORRESPONDENCE ADDRESS INDICATION FORM

Application Number	12/364,823
Filing Date	February 3, 2009
First Named Inventor	James Arthur Proctor Jr.
Confirmation Number	4791
Group Art Unit	2617
Examiner Name	Not yet assigned
Attorney Docket Number	4394.1003-000

Title VISUAL IDENTIFICATION INFORMATION USED AS CONFIRMATION IN A WIRELESS COMMUNICATION

I hereby appoint

☒ Practitioners associated with **Customer No. 021005**

☐ Practitioner(s) named below:

as my/our attorneys/agents to prosecute the application identified above, including any continuation or divisional applications thereof, and to transact all business in the United States Patent and Trademark Office connected therewith.

Please recognize or change the correspondence address for the above-identified application to:

☒ Customer Number 021005
Hamilton, Brook, Smith & Reynolds, P.C.
530 Virginia Road
P.O. Box 9133
Concord, Massachusetts 01742-9133

☐ Other

Please direct all telephone calls and facsimiles to:
Name David J. Thibodeau, Jr., Esq. Tel. No. 978-341-0036 Fax No. 978-341-0136

I am the:

☒ Applicant/Inventor.

☐ Authorized representative of the Assignee, [ ], of the entire interest. See 37 CFR § 3.71. A Statement under 37 CFR § 3.73(b) is enclosed.

☐ Authorized representative of the Assignee, [ ], together with [ ], of the entire interest. A Statement under 37 CFR § 3.73(b) is enclosed.

SIGNATURE of Applicant or Assignee of Record

Signature	James A Proctor Jr
Name	James Arthur Proctor, Jr.
Date	5/1/2009

876566_1

UNITED STATES PATENT AND TRADEMARK OFFICE

UNITED STATES DEPARTMENT OF COMMERCE
United States Patent and Trademark Office
Address: COMMISSIONER FOR PATENTS
P.O. Box 1450
Alexandria, Virginia 22313-1450
www.uspto.gov

APPLICATION NUMBER	FILING OR 371(C) DATE	FIRST NAMED APPLICANT	ATTY. DOCKET NO./TITLE
12/364,823	02/03/2009	James Arthur Proctor JR.	4394.1003-000

CONFIRMATION NO. 4791

POA ACCEPTANCE LETTER

21005
HAMILTON, BROOK, SMITH & REYNOLDS, P.C.
530 VIRGINIA ROAD
P.O. BOX 9133
CONCORD, MA 01742-9133

OC000000036334262

Date Mailed: 06/10/2009

NOTICE OF ACCEPTANCE OF POWER OF ATTORNEY

This is in response to the Power of Attorney filed 05/28/2009.

The Power of Attorney in this application is accepted. Correspondence in this application will be mailed to the above address as provided by 37 CFR 1.33.

/gbien-aime/

Office of Data Management, Application Assistance Unit (571) 272-4000, or (571) 272-4200, or 1-888-786-0101

HAMILTON BROOK SMITH REYNOLDS
Intellectual Property Law

RECEIVED
CENTRAL FAX CENTER
JUN 2 2 2009

Hamilton, Brook, Smith & Reynolds, PC
530 Virginia Road P.O. Box 9133
Concord, MA 01742-9133

T 978.341.0036
F 978.341.0136
www.hbsr.com

FACSIMILE COVER SHEET

Examiner: Office of Initial Patent Examination
Customer Service Center

Date: June 22, 2009

Client Code: 4394

Facsimile No.: 571-273-8300

From: David J. Thibodeau, Jr., Esq.

Subject: Request for Corrected Filing Receipt

Docket No.: 4394.1003-000

Applicants: James Arthur Proctor, Jr. and James Arthur Proctor, III

Application No.: 12/364,823

Filing Date: February 3, 2009

Number of pages including this cover sheet: 8

Please confirm receipt of facsimile: Yes ☒ No ☐

Sir:

Please process the attached Request for Corrected Filing Receipt.

900102

Privileged and Confidential - All information transmitted hereby is intended only for the use of the addressee(s) named above. If the reader of this message is not the intended recipient or the employee or agent responsible for delivering the message to the intended recipient(s), please note that any distribution or copying of this communication is strictly prohibited. Anyone who received this communication in error is asked to notify us immediately by telephone and to destroy the original message or return it to us at the above address via first class mail.

900100_1
DJT/nzk(dcm)
June 22, 2009

PATENT APPLICATION
Docket No.: 4394 1003-000

IN THE UNITED STATES PATENT AND TRADEMARK OFFICE

Applicants: James Arthur Proctor, Jr. and James Arthur Proctor, III

RECEIVED
CENTRAL FAX CENTER
JUN 2 2 2009

Application No.:	12/364,823	Group:	2617
Filed:	February 3, 2009	Examiner:	Not provided

Confirmation No.: 4791

For: VISUAL IDENTIFICATION INFORMATION USED AS CONFIRMATION IN A WIRELESS COMMUNICATION

CERTIFICATE OF MAILING OR TRANSMISSION
I hereby certify that this correspondence is being deposited with the United States Postal Service with sufficient postage as First Class Mail in an envelope addressed to Commissioner for Patents, P.O. Box 1450, Alexandria, VA 22313-1450, or is being facsimile transmitted to the United States Patent and Trademark Office on.
6/22/09 Nadine Z. Kush
Date Signature
Nadine Z. Kush
Typed or printed name of person signing certificate

REQUEST FOR CORRECTED FILING RECEIPT FOR UTILITY APPLICATION

Commissioner for Patents
P.O. Box 1450
Alexandria, VA 22313-1450

Sir:

We hereby request that the following items of information be corrected in the Updated Filing Receipt for the subject application received in this office on May 11, 2009.

A copy of a recently filed Declaration for Patent Application is submitted herewith.

The errors and corrections appear below.

In the Applicant(s) section, "James Arthur Proctor III, Indiatlantic, Fl;" should read --James Arthur Proctor III, Indialantic, FL;--

Enclosed are copies of the Updated Filing Receipt with changes noted thereon and a copy of the Declaration for Patent Application.

Pursuant to instructions in the February 29, 2000 O.G., we hereby request that the errors which are identified above be corrected in the captioned application to which this request for

correction is directed. It is understood that the Patent Office will issue an automatically-generated, corrected Filing Receipt in this and, if applicable, any other affected applications.

Respectfully submitted,

HAMILTON, BROOK, SMITH & REYNOLDS, P.C.

By _____

David J. Thibodeau, Jr.
Registration No. 31,671
Telephone: (978) 341-0036
Facsimile: (978) 341-0136

Concord, MA 01742-9133

Date: 6/22/09

PAGE 3/8 * RCVD AT 6/22/2009 3:26:10 PM [Eastern Daylight Time] * SVR:USPTO-EFXRF-5/10 * DNIS:2738300 * CSID:1978 341 0136 * DURATION (mm-ss):02-42

RECEIVED
CENTRAL FAX CENTER
JUN 2 2 2009

UNITED STATES PATENT AND TRADEMARK OFFICE

UNITED STATES DEPARTMENT OF COMMERCE
United States Patent and Trademark Office
Address: COMMISSIONER FOR PATENTS
P.O. Box 1450
Alexandria, Virginia 22313-1450
www.uspto.gov

APPLICATION NUMBER	FILING or 371(c) DATE	GRP ART UNIT	FIL FEE REC'D	ATTY DOCKET NO	TOT CLAIMS	IND CLAIMS
12/364,823	02/03/2009	2617	462	4394 1003-000	14	2

CONFIRMATION NO. 4791

UPDATED FILING RECEIPT

21005
HAMILTON, BROOK, SMITH & REYNOLDS, P.C.
530 VIRGINIA ROAD
P.O. BOX 9133
CONCORD, MA 01742-9133

Date Mailed. 05/07/2009

Receipt is acknowledged of this non-provisional patent application. The application will be taken up for examination in due course. Applicant will be notified as to the results of the examination. Any correspondence concerning the application must include the following identification information: the U S. APPLICATION NUMBER, FILING DATE, NAME OF APPLICANT, and TITLE OF INVENTION Fees transmitted by check or draft are subject to collection. Please verify the accuracy of the data presented on this receipt. **If an error is noted on this Filing Receipt, please submit a written request for a Filing Receipt Correction. Please provide a copy of this Filing Receipt with the changes noted thereon. If you received a "Notice to File Missing Parts" for this application, please submit any corrections to this Filing Receipt with your reply to the Notice. When the USPTO processes the reply to the Notice, the USPTO will generate another Filing Receipt incorporating the requested corrections**

Applicant(s)

James Arthur Proctor JR , Melbourne Beach, FL;
~~James Arthur Proctor III, Indiatlantic, FL;~~ James Arthur Proctor III, Indialantic, FL;

Power of Attorney: None

Domestic Priority data as claimed by applicant

This appln claims benefit of 61/095,001 09/08/2008
and claims benefit of 61/095,359 09/09/2008

Foreign Applications

If Required, Foreign Filing License Granted: 02/13/2009

The country code and number of your priority application, to be used for filing abroad under the Paris Convention, is **US 12/364,823**

Projected Publication Date: 03/11/2010

Non-Publication Request: No

Early Publication Request: No
**** SMALL ENTITY ****

MAY 1 1 2009
DOT
mc

PAGE 4/8 * RCVD AT 6/22/2009 3:26:10 PM [Eastern Daylight Time] * SVR:USPTO-EFXRF-5/10 * DNIS:2738300 * CSID:1978 341 0136 * DURATION (mm-ss):02-42

RECEIVED
CENTRAL FAX CENTER
JUN 2 2 2009

Title

VISUAL IDENTIFICATION INFORMATION USED AS CONFIRMATION IN A WIRELESS COMMUNICATION

Preliminary Class

455

PROTECTING YOUR INVENTION OUTSIDE THE UNITED STATES

Since the rights granted by a U.S patent extend only throughout the territory of the United States and have no effect in a foreign country, an inventor who wishes patent protection in another country must apply for a patent in a specific country or in regional patent offices. Applicants may wish to consider the filing of an international application under the Patent Cooperation Treaty (PCT). An international (PCT) application generally has the same effect as a regular national patent application in each PCT-member country. The PCT process **simplifies** the filing of patent applications on the same invention in member countries, but **does not result** in a grant of "an international patent" and does not eliminate the need of applicants to file additional documents and fees in countries where patent protection is desired.

Almost every country has its own patent law, and a person desiring a patent in a particular country must make an application for patent in that country in accordance with its particular laws. Since the laws of many countries differ in various respects from the patent law of the United States, applicants are advised to seek guidance from specific foreign countries to ensure that patent rights are not lost prematurely.

Applicants also are advised that in the case of inventions made in the United States, the Director of the USPTO must issue a license before applicants can apply for a patent in a foreign country The filing of a U.S. patent application serves as a request for a foreign filing license The application's filing receipt contains further information and guidance as to the status of applicant's license for foreign filing.

Applicants may wish to consult the USPTO booklet, "General Information Concerning Patents" (specifically, the section entitled "Treaties and Foreign Patents") for more information on timeframes and deadlines for filing foreign patent applications The guide is available either by contacting the USPTO Contact Center at 800-786-9199, or it can be viewed on the USPTO website at http://www.uspto.gov/web/offices/pac/doc/general/index html

For information on preventing theft of your intellectual property (patents, trademarks and copyrights), you may wish to consult the U.S. Government website, http://www.stopfakes.gov. Part of a Department of Commerce initiative, this website includes self-help "toolkits" giving innovators guidance on how to protect intellectual property in specific countries such as China, Korea and Mexico For questions regarding patent enforcement issues, applicants may call the U S Government hotline at 1-866-999-HALT (1-866-999-4158).

LICENSE FOR FOREIGN FILING UNDER

Title 35, United States Code, Section 184

Title 37, Code of Federal Regulations, 5.11 & 5.15

GRANTED

The applicant has been granted a license under 35 U.S.C. 184, if the phrase "IF REQUIRED, FOREIGN FILING LICENSE GRANTED" followed by a date appears on this form. Such licenses are issued in all applications where

PAGE 5/8 * RCVD AT 6/22/2009 3:26:10 PM [Eastern Daylight Time] * SVR:USPTO-EFXRF-5/10 * DNIS:2738300 * CSID:1978 341 0136 * DURATION (mm-ss):02-42

the conditions for issuance of a license have been met, regardless of whether or not a license may be required as set forth in 37 CFR 5.15. The scope and limitations of this license are set forth in 37 CFR 5.15(a) unless an earlier license has been issued under 37 CFR 5.15(b). The license is subject to revocation upon written notification. The date indicated is the effective date of the license, unless an earlier license of similar scope has been granted under 37 CFR 5.13 or 5.14

This license is to be retained by the licensee and may be used at any time on or after the effective date thereof unless it is revoked This license is automatically transferred to any related applications(s) filed under 37 CFR 1.53(d). This license is not retroactive.

The grant of a license does not in any way lessen the responsibility of a licensee for the security of the subject matter as imposed by any Government contract or the provisions of existing laws relating to espionage and the national security or the export of technical data. Licensees should apprise themselves of current regulations especially with respect to certain countries, of other agencies, particularly the Office of Defense Trade Controls, Department of State (with respect to Arms, Munitions and Implements of War (22 CFR 121-128)); the Bureau of Industry and Security, Department of Commerce (15 CFR parts 730-774); the Office of Foreign AssetsControl, Department of Treasury (31 CFR Parts 500+) and the Department of Energy.

NOT GRANTED

No license under 35 U.S.C. 184 has been granted at this time, if the phrase "IF REQUIRED, FOREIGN FILING LICENSE GRANTED" DOES NOT appear on this form. Applicant may still petition for a license under 37 CFR 5.12, if a license is desired before the expiration of 6 months from the filing date of the application. If 6 months has lapsed from the filing date of this application and the licensee has not received any indication of a secrecy order under 35 U.S.C 181, the licensee may foreign file the application pursuant to 37 CFR 5 15(b)

PAGE 6/8 * RCVD AT 6/22/2009 3:26:10 PM [Eastern Daylight Time] * SVR:USPTO-EFXRF-5/10 * DNIS:2738300 * CSID:1978 341 0136 * DURATION (mm-ss):02-42

DOCKET NO. 4394.1003-000

IN THE UNITED STATES PATENT AND TRADEMARK OFFICE

COPY

Declaration for Patent Application

☐ Supplemental (37 CFR § 1.67)

As a named inventor, I hereby declare that:

My residence, mailing address and citizenship are as stated next to my name;

I believe I am the original, first and sole inventor (if only one name is listed) or an original, first and joint inventor (if plural names are listed in the signatory page(s) commencing at page 2 hereof) of the subject matter which is claimed and for which a patent is sought on the invention entitled

VISUAL IDENTIFICATION INFORMATION USED AS CONFIRMATION IN A WIRELESS COMMUNICATION

the specification of which:

☒ is attached hereto

☐ was filed on [ ] as United States Application Number [ ].

☐ was filed on [PCT filing date] as PCT International Application No [PCT Appl'n No] [and assigned United States Application No. [ ]].

☐ and was amended on [ ] (if applicable).

I hereby state that I have reviewed and understand the contents of the above-identified specification, including the claims, as amended by any amendment referred to above.

I acknowledge the duty to disclose information which is material to patentability as defined in 37 CFR § 1.56, including for continuation-in-part applications, material information which became available between the filing date of the prior application and the national or PCT international filing date of the continuation-in-part application.

I hereby expressly authorize the filing of an International Patent Application under the Patent Cooperation Treaty which corresponds to and claims the priority of the above-identified application.

I hereby claim foreign priority benefits under 35 U.S.C. 119 or 365 of any foreign application(s) for patent or inventor's certificate, or of any PCT international application which designated at least one country other than the United States of America, listed below and have also identified below, by checking the box, any foreign application for patent or inventor's certificate, or of any PCT international application having a filing date before that of the application on which priority is claimed:

Prior Foreign Application(s)			Priority Not Claimed	Certified Copy Filed? YES	NO
(Number)	(Country)	(Day/Month/Year filed)	☐	☐	☐
(Number)	(Country)	(Day/Month/Year filed)	☐	☐	☐
(Number)	(Country)	(Day/Month/Year filed)	☐	☐	☐

PAGE 7/8 * RCVD AT 6/22/2009 3:26:10 PM [Eastern Daylight Time] * SVR:USPTO-EFXRF-5/10 * DNIS:2738300 * CSID:1978 341 0136 * DURATION (mm-ss):02-42

DOCKET NO. 4394.1003-000

I hereby declare that all statements made herein of my own knowledge are true and that all statements made on information and belief are believed to be true, and further that these statements were made with the knowledge that willful false statements and the like so made are punishable by fine or imprisonment, or both, under Section 1001 of Title 18 of the United States Code and that such willful false statements may jeopardize the validity of the application or any patent issued thereon.

Full name of sole or first inventor	James Arthur Proctor, Jr.		
Inventor's Signature			
Residence: City	State	Country	Citizenship
Melbourne Beach	Florida	U.S.A.	U.S.A.
Mailing Address (Business or Residential)			
Street or P.O. Box	258 Seaview Street		
City	State	ZIP	Country
Melbourne Beach	Florida	32951	U.S.A.

Full name of second joint inventor, if any	James Arthur Proctor, III		
Inventor's Signature			
Residence: City	State	Country	Citizenship
Indialantic	Florida	U.S.A.	U.S.A.
Mailing Address (Business or Residential)			
Street or P.O. Box	735 Oak Ridge Drive		
City	State	ZIP	Country
Indialantic	Florida	32903	U.S.A.

PAGE 8/8 * RCVD AT 6/22/2009 3:26:10 PM [Eastern Daylight Time] * SVR:USPTO-EFXRF-5/10 * DNIS:2738300 * CSID:1978 341 0136 * DURATION (mm-ss):02-42

UNITED STATES PATENT AND TRADEMARK OFFICE

UNITED STATES DEPARTMENT OF COMMERCE
United States Patent and Trademark Office
Address: COMMISSIONER FOR PATENTS
P.O. Box 1450
Alexandria, Virginia 22313-1450
www.uspto.gov

APPLICATION NUMBER	FILING or 371(c) DATE	GRP ART UNIT	FIL FEE REC'D	ATTY.DOCKET.NO	TOT CLAIMS	IND CLAIMS
12/364,823	02/03/2009	3627	462	4394.1003-000	14	2

CONFIRMATION NO. 4791

CORRECTED FILING RECEIPT

21005
HAMILTON, BROOK, SMITH & REYNOLDS, P.C.
530 VIRGINIA ROAD
P.O. BOX 9133
CONCORD, MA 01742-9133

OC000000036692048

Date Mailed: 07/01/2009

Receipt is acknowledged of this non-provisional patent application. The application will be taken up for examination in due course. Applicant will be notified as to the results of the examination. Any correspondence concerning the application must include the following identification information: the U.S. APPLICATION NUMBER, FILING DATE, NAME OF APPLICANT, and TITLE OF INVENTION. Fees transmitted by check or draft are subject to collection. Please verify the accuracy of the data presented on this receipt. **If an error is noted on this Filing Receipt, please submit a written request for a Filing Receipt Correction. Please provide a copy of this Filing Receipt with the changes noted thereon. If you received a "Notice to File Missing Parts" for this application, please submit any corrections to this Filing Receipt with your reply to the Notice. When the USPTO processes the reply to the Notice, the USPTO will generate another Filing Receipt incorporating the requested corrections**

Applicant(s)

James Arthur Proctor JR., Melbourne Beach, FL;
James Arthur Proctor III, Indialantic, FL;

Power of Attorney: The patent practitioners associated with Customer Number 021005

Domestic Priority data as claimed by applicant

This appln claims benefit of 61/095,001 09/08/2008
and claims benefit of 61/095,359 09/09/2008

Foreign Applications

If Required, Foreign Filing License Granted: 02/13/2009

The country code and number of your priority application, to be used for filing abroad under the Paris Convention, is **US 12/364,823**

Projected Publication Date: 03/11/2010

Non-Publication Request: No

Early Publication Request: No
**** SMALL ENTITY ****

Title

VISUAL IDENTIFICATION INFORMATION USED AS CONFIRMATION IN A WIRELESS COMMUNICATION

Preliminary Class

705

PROTECTING YOUR INVENTION OUTSIDE THE UNITED STATES

Since the rights granted by a U.S. patent extend only throughout the territory of the United States and have no effect in a foreign country, an inventor who wishes patent protection in another country must apply for a patent in a specific country or in regional patent offices. Applicants may wish to consider the filing of an international application under the Patent Cooperation Treaty (PCT). An international (PCT) application generally has the same effect as a regular national patent application in each PCT-member country. The PCT process **simplifies** the filing of patent applications on the same invention in member countries, but **does not result** in a grant of "an international patent" and does not eliminate the need of applicants to file additional documents and fees in countries where patent protection is desired.

Almost every country has its own patent law, and a person desiring a patent in a particular country must make an application for patent in that country in accordance with its particular laws. Since the laws of many countries differ in various respects from the patent law of the United States, applicants are advised to seek guidance from specific foreign countries to ensure that patent rights are not lost prematurely.

Applicants also are advised that in the case of inventions made in the United States, the Director of the USPTO must issue a license before applicants can apply for a patent in a foreign country. The filing of a U.S. patent application serves as a request for a foreign filing license. The application's filing receipt contains further information and guidance as to the status of applicant's license for foreign filing.

Applicants may wish to consult the USPTO booklet, "General Information Concerning Patents" (specifically, the section entitled "Treaties and Foreign Patents") for more information on timeframes and deadlines for filing foreign patent applications. The guide is available either by contacting the USPTO Contact Center at 800-786-9199, or it can be viewed on the USPTO website at http://www.uspto.gov/web/offices/pac/doc/general/index.html.

For information on preventing theft of your intellectual property (patents, trademarks and copyrights), you may wish to consult the U.S. Government website, http://www.stopfakes.gov. Part of a Department of Commerce initiative, this website includes self-help "toolkits" giving innovators guidance on how to protect intellectual property in specific countries such as China, Korea and Mexico. For questions regarding patent enforcement issues, applicants may call the U.S. Government hotline at 1-866-999-HALT (1-866-999-4158).

LICENSE FOR FOREIGN FILING UNDER

Title 35, United States Code, Section 184

Title 37, Code of Federal Regulations, 5.11 & 5.15

GRANTED

The applicant has been granted a license under 35 U.S.C. 184, if the phrase "IF REQUIRED, FOREIGN FILING LICENSE GRANTED" followed by a date appears on this form. Such licenses are issued in all applications where

the conditions for issuance of a license have been met, regardless of whether or not a license may be required as set forth in 37 CFR 5.15. The scope and limitations of this license are set forth in 37 CFR 5.15(a) unless an earlier license has been issued under 37 CFR 5.15(b). The license is subject to revocation upon written notification. The date indicated is the effective date of the license, unless an earlier license of similar scope has been granted under 37 CFR 5.13 or 5.14.

This license is to be retained by the licensee and may be used at any time on or after the effective date thereof unless it is revoked. This license is automatically transferred to any related applications(s) filed under 37 CFR 1.53(d). This license is not retroactive.

The grant of a license does not in any way lessen the responsibility of a licensee for the security of the subject matter as imposed by any Government contract or the provisions of existing laws relating to espionage and the national security or the export of technical data. Licensees should apprise themselves of current regulations especially with respect to certain countries, of other agencies, particularly the Office of Defense Trade Controls, Department of State (with respect to Arms, Munitions and Implements of War (22 CFR 121-128)); the Bureau of Industry and Security, Department of Commerce (15 CFR parts 730-774); the Office of Foreign AssetsControl, Department of Treasury (31 CFR Parts 500+) and the Department of Energy.

NOT GRANTED

No license under 35 U.S.C. 184 has been granted at this time, if the phrase "IF REQUIRED, FOREIGN FILING LICENSE GRANTED" DOES NOT appear on this form. Applicant may still petition for a license under 37 CFR 5.12, if a license is desired before the expiration of 6 months from the filing date of the application. If 6 months has lapsed from the filing date of this application and the licensee has not received any indication of a secrecy order under 35 U.S.C. 181, the licensee may foreign file the application pursuant to 37 CFR 5.15(b).

UNITED STATES PATENT AND TRADEMARK OFFICE

UNITED STATES DEPARTMENT OF COMMERCE
United States Patent and Trademark Office
Address: COMMISSIONER FOR PATENTS
P.O. Box 1450
Alexandria, Virginia 22313-1450
www.uspto.gov

APPLICATION NUMBER	FILING OR 371(C) DATE	FIRST NAMED APPLICANT	ATTY. DOCKET NO./TITLE
12/364,823	02/03/2009	James Arthur Proctor JR.	4394.1003-000

CONFIRMATION NO. 4791

PUBLICATION NOTICE

OC000000040547150

21005
HAMILTON, BROOK, SMITH & REYNOLDS, P.C.
530 VIRGINIA ROAD
P.O. BOX 9133
CONCORD, MA 01742-9133

Title:VISUAL IDENTIFICATION INFORMATION USED AS CONFIRMATION IN A WIRELESS COMMUNICATION

Publication No.US-2010-0063889-A1
Publication Date:03/11/2010

NOTICE OF PUBLICATION OF APPLICATION

The above-identified application will be electronically published as a patent application publication pursuant to 37 CFR 1.211, et seq. The patent application publication number and publication date are set forth above.

The publication may be accessed through the USPTO's publically available Searchable Databases via the Internet at www.uspto.gov. The direct link to access the publication is currently http://www.uspto.gov/patft/.

The publication process established by the Office does not provide for mailing a copy of the publication to applicant. A copy of the publication may be obtained from the Office upon payment of the appropriate fee set forth in 37 CFR 1.19(a)(1). Orders for copies of patent application publications are handled by the USPTO's Office of Public Records. The Office of Public Records can be reached by telephone at (703) 308-9726 or (800) 972-6382, by facsimile at (703) 305-8759, by mail addressed to the United States Patent and Trademark Office, Office of Public Records, Alexandria, VA 22313-1450 or via the Internet.

In addition, information on the status of the application, including the mailing date of Office actions and the dates of receipt of correspondence filed in the Office, may also be accessed via the Internet through the Patent Electronic Business Center at www.uspto.gov using the public side of the Patent Application Information and Retrieval (PAIR) system. The direct link to access this status information is currently http://pair.uspto.gov/. Prior to publication, such status information is confidential and may only be obtained by applicant using the private side of PAIR.

Further assistance in electronically accessing the publication, or about PAIR, is available by calling the Patent Electronic Business Center at 1-866-217-9197.

Office of Data Managment, Application Assistance Unit (571) 272-4000, or (571) 272-4200, or 1-888-786-0101

PLUS Search Results for S/N 12364823, Searched Wed May 26 14:14:44 EDT 2010

The Patent Linguistics Utility System (PLUS) is a USPTO automated search system for U.S. Patents from 1971 to the present PLUS is a query-by-example search system which produces a list of patents that are most closely related linguistically to the application searched. This search was prepared by the staff of the Scientific and Technical Information Center, SIRA.

20100061294 99
20100062746 99
20100062758 99
20100063867 99
20100063889 99
6115384 86
6614774 86
6891811 86
7003307 86
7020480 86
7086089 86
7136645 86
7149625 86
7193995 86
7236472 86
7248677 86
7355990 86
7383577 86
7458184 86
7565155 86
7574208 86
7634069 86
20020098840 86
20030060973 86
20030217283 86
20030236990 86
20040142709 86
20040162871 86
20040181604 86
20040236850 86
20050021725 86
20050038876 86
20050058094 86
20050073953 86
20050075119 86
20050169446 86
20050220045 86
20050220134 86
20050249134 86
20060009213 86
20060025154 86
20060098588 86
20060104214 86
20060123079 86
20060173844 86
20060173981 86
20070038759 86
20070043676 86
20070078949 86
20070214046 86

UNITED STATES PATENT AND TRADEMARK OFFICE

UNITED STATES DEPARTMENT OF COMMERCE
United States Patent and Trademark Office
Address: COMMISSIONER FOR PATENTS
P.O. Box 1450
Alexandria, Virginia 22313-1450
www.uspto.gov

APPLICATION NO.	FILING DATE	FIRST NAMED INVENTOR	ATTORNEY DOCKET NO.	CONFIRMATION NO.
12/364,823	02/03/2009	James Arthur Proctor JR.	4394.1003-000	4791

21005 7590 06/16/2010
HAMILTON, BROOK, SMITH & REYNOLDS, P.C.
530 VIRGINIA ROAD
P.O. BOX 9133
CONCORD, MA 01742-9133

EXAMINER
HAYLES, ASHFORD S

ART UNIT	PAPER NUMBER
3687	

MAIL DATE	DELIVERY MODE
06/16/2010	PAPER

Please find below and/or attached an Office communication concerning this application or proceeding.

The time period for reply, if any, is set in the attached communication.

PTOL-90A (Rev. 04/07)

Office Action Summary	Application No.	Applicant(s)	
	12/364,823	PROCTOR ET AL.	
	Examiner	Art Unit	
	ASHFORD HAYLES	3687	

-- The MAILING DATE of this communication appears on the cover sheet with the correspondence address --

Period for Reply

A SHORTENED STATUTORY PERIOD FOR REPLY IS SET TO EXPIRE 3 MONTH(S) OR THIRTY (30) DAYS, WHICHEVER IS LONGER, FROM THE MAILING DATE OF THIS COMMUNICATION.

- Extensions of time may be available under the provisions of 37 CFR 1.136(a). In no event, however, may a reply be timely filed after SIX (6) MONTHS from the mailing date of this communication.
- If NO period for reply is specified above, the maximum statutory period will apply and will expire SIX (6) MONTHS from the mailing date of this communication.
- Failure to reply within the set or extended period for reply will, by statute, cause the application to become ABANDONED (35 U.S.C. § 133). Any reply received by the Office later than three months after the mailing date of this communication, even if timely filed, may reduce any earned patent term adjustment. See 37 CFR 1.704(b).

Status

1)☒ Responsive to communication(s) filed on *03 February 2009*.

2a)☐ This action is **FINAL**. 2b)☒ This action is non-final.

3)☐ Since this application is in condition for allowance except for formal matters, prosecution as to the merits is closed in accordance with the practice under *Ex parte Quayle*, 1935 C.D. 11, 453 O.G. 213.

Disposition of Claims

4)☒ Claim(s) *1-14* is/are pending in the application.

4a) Of the above claim(s) _____ is/are withdrawn from consideration.

5)☐ Claim(s) _____ is/are allowed.

6)☒ Claim(s) *1-14* is/are rejected.

7)☐ Claim(s) _____ is/are objected to.

8)☐ Claim(s) _____ are subject to restriction and/or election requirement.

Application Papers

9)☐ The specification is objected to by the Examiner.

10)☒ The drawing(s) filed on *03 February 2009* is/are: a)☒ accepted or b)☐ objected to by the Examiner.

Applicant may not request that any objection to the drawing(s) be held in abeyance. See 37 CFR 1.85(a).

Replacement drawing sheet(s) including the correction is required if the drawing(s) is objected to. See 37 CFR 1.121(d).

11)☐ The oath or declaration is objected to by the Examiner. Note the attached Office Action or form PTO-152.

Priority under 35 U.S.C. § 119

12)☐ Acknowledgment is made of a claim for foreign priority under 35 U.S.C. § 119(a)-(d) or (f).

a)☐ All b)☐ Some * c)☐ None of:

1.☐ Certified copies of the priority documents have been received.

2.☐ Certified copies of the priority documents have been received in Application No. _____.

3.☐ Copies of the certified copies of the priority documents have been received in this National Stage application from the International Bureau (PCT Rule 17.2(a)).

* See the attached detailed Office action for a list of the certified copies not received.

Attachment(s)

1) ☒ Notice of References Cited (PTO-892)

2) ☐ Notice of Draftsperson's Patent Drawing Review (PTO-948)

3) ☒ Information Disclosure Statement(s) (PTO/SB/08) Paper No(s)/Mail Date *2/3/2009*.

4) ☐ Interview Summary (PTO-413) Paper No(s)/Mail Date. _____ .

5) ☐ Notice of Informal Patent Application

6) ☐ Other: _____.

DETAILED ACTION

1. This communication is a first Office Action Non-Final rejection on the merits. Claims 1-14 as originally filed are currently pending and are considered below.

Claim Rejections - 35 USC § 112

2. The following is a quotation of the second paragraph of 35 U.S.C. 112:

> The specification shall conclude with one or more claims particularly pointing out and distinctly claiming the subject matter which the applicant regards as his invention.

3. Claims 7 and 14 are rejected under 35 U.S.C. 112, second paragraph, as being indefinite for failing to particularly point out and distinctly claim the subject matter which applicant regards as the invention.

Claims 7 and 14 recite: "a second device". It is unclear as to if this is the same second wireless device or a different second device. For examination purposes the Examiner will construe the second device as the second wireless device.

Claim Rejections - 35 USC § 103

4. The following is a quotation of 35 U.S.C. 103(a) which forms the basis for all obviousness rejections set forth in this Office action:

> (a) A patent may not be obtained though the invention is not identically disclosed or described as set forth in section 102 of this title, if the differences between the subject matter sought to be patented and the prior art are such that the subject matter as a whole would have been obvious at the time the invention was made to a person having ordinary skill in the art to which said subject matter pertains. Patentability shall not be negatived by the manner in which the invention was made.

5. **Claims 1-14 rejected under 35 U.S.C. 103(a) as being unpatentable over Hammad (2009/0271211)**.

As per Claims 1 and 8, Hammad discloses a method for operating a first wireless communication device comprising:

receiving a wireless identifier from a second wireless device using a peer-to-peer protocol (pg.6, ¶ [0057] discusses the customer exclusive data tag and account information such as the account number associated with the issuer 28 may pass from the portable consumer device A 32-1 to the access device 34, where pg.4, ¶ [0049] discusses portable consumer device is capable of transferring and receiving data using a near field communications, where the first wireless device is the access device 34 and the second wireless device is the consumer device 32);

connecting to a server using a wireless protocol different from the peer- to-peer protocol (pg.6, ¶ [0057] discusses the access device 34 may then send the authorization request message to the payment processing network 26 via the merchant's acquirer 24 (step 204) where pg.4, ¶ [0036] discusses the payment processing network 26 may use any suitable wired or wireless network, including the Internet);

sending the received wireless identifier to the server (pg.6, ¶ [0058] discusses a server computer in the payment processing network 26 can then receive (step 206) and analyze the authorization request message); and

receiving further information from the server, the further information associated with an entity or object associated with the second wireless device (pg.4, ¶ [0042] discusses after the issuer receives the authorization request message, the issuer sends

an authorization response message back to the payment processing network to indicate whether or not the current transaction is authorized (or not authorized). The payment processing network then forwards the authorization response message back to the acquirer. The acquirer then sends the response message back to the merchant), wherein the further information additionally includes a visual identification of an object or entity associated with the second device (pg.8, ¶ [0083] discusses the customer exclusive data in an authorization request message could be used to hold other account data and preferences for such things as student ID, payment preferences, dorm access information or ID, notification information, age verification and identity).

Therefore Hammad discloses the claimed apparatus except for a wireless protocol different from a peer- to-peer protocol. Hammad discloses that it is known in the art to send data over a wireless network. Examiner takes Official Notice that it would have been well known within the art for a server to receive data over a wireless network using a protocol other than peer-to-peer. Therefore, it would have been obvious for one having ordinary skill in the art at the time the invention was made to receive information wirelessly of Hammad using a protocol different from peer-to-peer, in order for an authorization request message to be sent to a payment processing network via the merchant's acquirer (pg.6, ¶ [0057]).

As per Claims 2 and 9, Hammad discloses the method of claim 1 additionally comprising:

notifying a user of the first wireless device of the proximity of the second wireless device (pg.6, ¶ [0064] discusses a parent could give his card to his child and ask to be notified any time his card is used, anytime a transaction exceeds a predetermined threshold (e.g., $25), or anytime the merchant has a specified characteristic (e.g. a liquor store). Notification flags could be of any type, value, merchant name or type, location, count, etc. The Examiner is construing that the access device of Hammad possess the ability to notify a user of the consumer device the location of a transaction).

As per Claims 3 and 10, Hammad discloses the method of claim 1 further comprising:

sending a message to the server, the message representing a request to forward a message to the first wireless device (pg.6, ¶ [0058] discusses the customer exclusive data may include the consumer's mobile phone number and may also include a preference for receiving alert messages for transactions that are conducted by the consumer. The additional processing in this example comprises initiating the sending of a notification message to the consumer device e.g., portable consumer device A 32-1).

As per Claims 4 and 11, Hammad discloses the method of claim 1 additionally comprising sending a message to the server as part of a relationship brokering function coordinated by the server (pg.5, ¶ [0051] discusses instructions may include instructions for reading a user exclusive data tag or user exclusive data from a consumer device, generating an authorization request message with the user exclusive

data tag or the user exclusive data, and sending the authorization request message including the user exclusive data tag or the user exclusive data to a service provider such as an issuer or payment processing network).

6. **Claims 5-7 and 12-14 rejected under 35 U.S.C. 103(a) as being unpatentable over Hammad (2009/0271211) in view of Van Bosch et al. (PG PUB. 2008/0313079)**.

As per Claims 5 and 12, Hammad discusses the method of the claimed invention. However, Hammad fails to disclose wherein the server further performs the steps of:

coordinating with an application running at least one of the of the first and second wireless devices, to perform a point of sale transaction utilizing user input received from at least one of the first and second wireless devices;

performing one or more confirmations of steps of the transaction; and

wherein at least one confirmation step additionally comprises:

sending a message to one of the first or second wireless devices to cause the application to display an identifying picture related to one of the devices.

Van Bosch et al. teaches coordinating with an application running at least one of the of the first and second wireless devices (pg.3, ¶ [0029] discusses the communication system 100, the wireless communication device 110 initiates the proximity payment application to perform the proximity payment transaction. The proximity payment transaction process enables the wireless communication device 110

to perform the transaction with the point of sale terminal 150), to perform a point of sale transaction utilizing user input received from at least one of the first and second wireless devices (pg.3, ¶ [0029] discusses the operator operating the point of sale terminal 150 inputs a code placed as the watermark on the superimposed photo image);

performing one or more confirmations of steps of the transaction (pg.3, ¶ [0029] discusses after initiating, the wireless communication device 110 calculates the authentication code of the superimposed photo image. The calculated authentication code is then transmitted to the point of sale terminal 150 via short-range wireless communication. The point of sale terminal 150 receives the authentication code from the wireless communication device 110, where the authentication code is construed as a confirmation step of a transaction); and

wherein at least one confirmation step additionally comprises:

sending a message to one of the first or second wireless devices to cause the application to display an identifying picture related to one of the devices (pg.3, ¶ [0029] discusses the operator operating the point of sale terminal 150 inputs a code placed as the watermark on the superimposed photo image. This step is done to ensure that the operator operating the point of sale terminal is forced to look at the photo image with the watermark to verify the user's identity and after receiving, the trusted party 140 verifies the identity of the user based upon the received code and the received

authentication code. The trusted party 140 then transmits an approval message to the point of sale terminal 150 for approving the transaction).

Therefore, it would have been obvious to one of ordinary skill in the art at the time of the invention to utilize the proximity payment application as in Van Bosch et al. in the system executing the method of Hammad with the motivation of offering proximity payment transaction between a wireless purchasing device and a point of sale terminal in conjunction with a trusted party (Abstract) as taught by Van Bosch et al. over that of Hammad.

As per Claims 6 and 13, Hammad discloses the method of claim 5 wherein both the first and second devices perform at least one confirmation step (pg.7, ¶ [0068] discusses the active mode, notification by e-mail, text message, or phone call is made to ask for the transaction to be allowed or disallowed).

As per Claims 7 and 14, Hammad discloses the method of claim 6 wherein the server further performs one or more of:

authorizing the transaction to a third party (pg.4, ¶ [0041] discusses the payment processing network 26 then forwards the authorization request message to the issuer 28 of the portable consumer device, where issuer 28 is a bank);

interacting with a point of sale application to associate an itemized list of items with a detected second device (pg.6, ¶ [0071] discusses a receipt is required could be included in the customer exclusive data in an authorization request message which passes from the merchant 22 to the payment processing network 26).

However, Hammad fails to disclose confirming with the application on the second device, thereby requiring user input that the bill of goods list is correct and storing information related to a detected account identity of the second device.

Van Bosch et al. teaches confirming with the application on the second device, thereby requiring user input that the bill of goods list is correct (pg.5, ¶ [0044] discusses a hand written signature may be captured on a smart phone, such as a PDA, using handwriting recognition hardware and software) and storing information related to a detected account identity of the second device (pg.5, ¶ [0044] discusses the signature may be sent to the trusted party 140 via electronic mail, or the trusted party 140 may already have the user's signature in their records and may scan and superimpose the user's signature on the photo image as a second watermark).

Therefore, it would have been obvious to one of ordinary skill in the art at the time of the invention to utilize the signature capture and storing the user's signature as in Van Bosch et al. in the system executing the method of Hammad with the motivation of offering proximity payment transaction between a wireless purchasing device and a point of sale terminal in conjunction with a trusted party (Abstract) as taught by Van Bosch et al. over that of Hammad.

Conclusion

7. The prior art made of record and not relied upon is considered pertinent to applicant's disclosure.

8. Geddes #7,207,480 discloses a certified digital photo authentication system.

Any inquiry concerning this communication or earlier communications from the examiner should be directed to ASHFORD HAYLES whose telephone number is (571)270-5106. The examiner can normally be reached on Monday - Friday 8:00 A.M.-5:00 P.M..

If attempts to reach the examiner by telephone are unsuccessful, the examiner's supervisor, Matthew S. Gart can be reached on 571-272-3955. The fax phone number for the organization where this application or proceeding is assigned is 571-273-8300.

Information regarding the status of an application may be obtained from the Patent Application Information Retrieval (PAIR) system. Status information for published applications may be obtained from either Private PAIR or Public PAIR. Status information for unpublished applications is available through Private PAIR only. For more information about the PAIR system, see http://pair-direct.uspto.gov. Should you have questions on access to the Private PAIR system, contact the Electronic Business Center (EBC) at 866-217-9197 (toll-free). If you would like assistance from a USPTO Customer Service Representative or access to the automated information system, call 800-786-9199 (IN USA OR CANADA) or 571-272-1000.

/Elaine Gort/
Primary Examiner, Art Unit 3687

/A. H./
Examiner, Art Unit 3687

Notice of References Cited	Application/Control No. 12/364,823	Applicant(s)/Patent Under Reexamination PROCTOR ET AL.	
	Examiner ASHFORD HAYLES	Art Unit 3687	Page 1 of 1

U.S. PATENT DOCUMENTS

*		Document Number Country Code-Number-Kind Code	Date MM-YYYY	Name	Classification
*	A	US-7,233,960 B1	06-2007	Boris et al.	707/792
*	B	US-2007/0255653 A1	11-2007	Tumminaro et al.	705/039
*	C	US-7,315,944 B2	01-2008	Dutta et al.	713/171
*	D	US-7,379,920 B2	05-2008	Leung et al.	705/67
*	E	US-2008/0114699 A1	05-2008	YUAN et al.	705/78
*	F	US-2009/0037286 A1	02-2009	Foster, Brian Edward	705/21
*	G	US-2009/0177530 A1	07-2009	KING et al.	705/10
*	H	US-2009/0281904 A1	11-2009	PHARRIS, DENNIS J.	705/17
*	I	US-2009/0313105 A1	12-2009	Magnusson, Stefan	705/14.25
	J	US-			
	K	US-			
	L	US-			
	M	US-			

FOREIGN PATENT DOCUMENTS

*		Document Number Country Code-Number-Kind Code	Date MM-YYYY	Country	Name	Classification
	N					
	O					
	P					
	Q					
	R					
	S					
	T					

NON-PATENT DOCUMENTS

*		Include as applicable: Author, Title Date, Publisher, Edition or Volume, Pertinent Pages)
	U	
	V	
	W	
	X	

*A copy of this reference is not being furnished with this Office action. (See MPEP § 707.05(a).)
Dates in MM-YYYY format are publication dates. Classifications may be US or foreign.

Index of Claims	Application/Control No.	Applicant(s)/Patent Under Reexamination
	12364823	PROCTOR ET AL.
	Examiner	**Art Unit**
	ASHFORD HAYLES	3687

✓	Rejected	-	Cancelled	N	Non-Elected	A	Appeal
=	Allowed	÷	Restricted	I	Interference	O	Objected

☐ Claims renumbered in the same order as presented by applicant ☐ CPA ☐ T.D. ☐ R.1.47

CLAIM		DATE								
Final	Original	05/27/2010								
	1	✓								
	2	✓								
	3	✓								
	4	✓								
	5	✓								
	6	✓								
	7	✓								
	8	✓								
	9	✓								
	10	✓								
	11	✓								
	12	✓								
	13	✓								
	14	✓								

Search Notes	Application/Control No.	Applicant(s)/Patent Under Reexamination
	12364823	PROCTOR ET AL.
	Examiner	**Art Unit**
	ASHFORD HAYLES	3687

SEARCHED

Class	Subclass	Date	Examiner
705	21	5/27/2010	AH

SEARCH NOTES

Search Notes	Date	Examiner
EAST (See Attachments)	5/27/2010	AH

INTERFERENCE SEARCH

Class	Subclass	Date	Examiner

/A. H./ Examiner.Art Unit 3687	

EAST Search History

EAST Search History (Prior Art)

Ref #	Hits	Search Query	DBs	Default Operator	Plurals	Time Stamp
L1	2	("20080313079").PN.	US-PGPUB; USPAT; USOCR; FPRS; EPO; JPO; DERWENT; IBM_TDB	OR	OFF	2010/05/31 17:19
L2	1003	705/21	US-PGPUB; USPAT; USOCR; FPRS; EPO; JPO; DERWENT; IBM_TDB	OR	ON	2010/05/31 17:29
L3	35	2 and (wireless or contactless) near (payment or transaction)	US-PGPUB; USPAT; USOCR; FPRS; EPO; JPO; DERWENT; IBM_TDB	OR	ON	2010/05/31 17:29
L4	25	3 and (photo or image or picture or graphic or still)	US-PGPUB; USPAT; USOCR; FPRS; EPO; JPO; DERWENT; IBM_TDB	OR	ON	2010/05/31 17:29
L5	2	3 and (photo or image or picture or graphic or still) near (item or product)	US-PGPUB; USPAT; USOCR; FPRS; EPO; JPO; DERWENT; IBM_TDB	OR	ON	2010/05/31 17:30
L6	47	2 and (wireless or mobile) near (payment or transaction)	US-PGPUB; USPAT; USOCR; FPRS; EPO; JPO; DERWENT; IBM_TDB	OR	ON	2010/05/31 17:30
L7	2	6 and (photo or image or picture or graphic or still) near (item or product)	US-PGPUB; USPAT; USOCR; FPRS; EPO; JPO; DERWENT; IBM_TDB	OR	ON	2010/05/31 17:30

L8	34	6 and (photo or image or picture or graphic or still)	US-PGPUB; USPAT; USOCR; FPRS; EPO; JPO; DERWENT; IBM_TDB	OR	ON	2010/05/31 17:30
L9	30	8 and (list or receipt)	US-PGPUB; USPAT; USOCR; FPRS; EPO; JPO; DERWENT; IBM_TDB	OR	ON	2010/05/31 17:31
L10	30	9 and (authoriz$5 or confirm$5 or verifi$6)	US-PGPUB; USPAT; USOCR; FPRS; EPO; JPO; DERWENT; IBM_TDB	OR	ON	2010/05/31 17:31
L11	4	10 and "peer-to-peer"	US-PGPUB; USPAT; USOCR; FPRS; EPO; JPO; DERWENT; IBM_TDB	OR	ON	2010/05/31 17:32
L12	2	10 and "NFC"	US-PGPUB; USPAT; USOCR; FPRS; EPO; JPO; DERWENT; IBM_TDB	OR	ON	2010/05/31 17:32
L13	0	10 and visual near ID	US-PGPUB; USPAT; USOCR; FPRS; EPO; JPO; DERWENT; IBM_TDB	OR	ON	2010/05/31 17:33
S1	4652	(payment or transaction) with (user adj input)	US-PGPUB; USPAT; USOCR; FPRS; EPO; JPO; DERWENT; IBM_TDB	OR	ON	2010/05/31 15:05
S2	14	(wireless or contactless) near(payment or transaction) with (user adj input)	US-PGPUB; USPAT; USOCR; FPRS; EPO; JPO; DERWENT; IBM_TDB	OR	ON	2010/05/31 15:05

S3	89	("20020073027" | "20020188565" | "20030045272" | "20040030601" | "20040190468" | "20040264466" | "20060069922" | "20060079284" | "20060085419" | "20070106612" | "20070178886" | "20080010190" | "20080097851" | "20080109741" | "20080114699" | "20080133403" | "20080167961" | "20080181154" | "20080182591" | "20080182592" | "20080189394" | "20080222711" | "20090037286" | "20090177530" | "20090281904" | "20090313105" | "6487601" | "7177594" | "7185204" | "7233960" | "7280847" | "7305245" | "7315944" | "7349871" | "7403762" | "7414988" | "7433649" | "7433694" | "7434723").PN.	US-PGPUB; USPAT; USOCR; FPRS; EPO; JPO; DERWENT; IBM_TDB	OR	ON	2010/05/31 15:12

EAST Search History (Interference)

<This search history is empty>

5/31/2010 5:33:23 PM
C:\Documents and Settings\ahayles\My Documents\EAST\Workspaces\12364823.wsp

Substitute for form 1449B/PTO **INFORMATION DISCLOSURE STATEMENT IN AN APPLICATION** **LISTING OF REFERENCES** **January 30, 2009** (Use several sheets if necessary)	ATTORNEY DOCKET NO. 4394.1003-000		APPLICATION NO.
	FIRST NAMED INVENTOR James Arthur Proctor, Jr.		FILING DATE
	EXAMINER	CONFIRMATION NO.	GROUP

U.S. PATENT DOCUMENTS

Examiner's Initials	REF. NO.	DOCUMENT NUMBER Number-Kind Code (if known)	ISSUE DATE / PUBLICATION DATE MM-DD-YYYY	NAME OF PATENTEE OR APPLICANT OF CITED DOCUMENT
/A.H./	A1	7,185,204	02-27-2007	Narayanaswami, *et al.*
	A2	6,487,601	11-26-2002	Hubacher, *et al.*
	A3	7,433,694	10-07-2008	Morgan, *et al.*
	A4	7,414,988	08-19-2008	Jones, *et al.*
	A5	7,403,762	07-22-2008	Morgan, *et al.*
	A6	7,305,245	12-04-2007	Alizadeh-Shabdiz, *et al.*
	A7	7,434,723	10-14-2008	White, *et al.*
	A8	7,349,871	03-25-2008	Labrou, *et al.*
	A9	7,280,847	10-09-2007	Goldthwaite, *et al.*
	A10	7,177,594	02-13-2007	Burr
	A11	7,433,649 B2	10-07-2008	Toulis, *et al.*
	A12	2008/0222711	09-11-2008	Michaelis
	A13	2008/0182592	07-31-2008	Cha, *et al.*
	A14	2008/0167961	07-10-2008	Wentler, *et al.*
	A15	2008/0133403	06-05-2008	Hamzeh
	A16	2008/0097851	04-24-2008	Bemmel, *et al.*
	A17	2008/0010190	01-10-2008	Rackley, *et al.*
	A18	2007/0178886	08-02-2007	Wang, *et al.*
	A19	2007/0106612	05-10-2007	O'Brien, *et al.*
	A20	2006/0079284	04-13-2006	Lu, *et al.*
	A21	2006/0069922	03-30-2006	Jelinek, *et al.*

EXAMINER	DATE CONSIDERED
/Ashford Hayles/	05/26/2010

#864963 v1 - Listing of References (PTO-Form 1449)

ALL REFERENCES CONSIDERED EXCEPT WHERE LINED THROUGH. /A.H./

Substitute for form 1449B/PTO **INFORMATION DISCLOSURE STATEMENT IN AN APPLICATION** **LISTING OF REFERENCES** **January 30, 2009** (Use several sheets if necessary)	ATTORNEY DOCKET NO. 4394.1003-000		APPLICATION NO.
	FIRST NAMED INVENTOR James Arthur Proctor, Jr.		FILING DATE
	EXAMINER	CONFIRMATION NO.	GROUP

U.S. PATENT DOCUMENTS

Examiner's Initials	REF. NO.	DOCUMENT NUMBER Number-Kind Code (if known)	ISSUE DATE / PUBLICATION DATE MM-DD-YYYY	NAME OF PATENTEE OR APPLICANT OF CITED DOCUMENT
/A.H./	A22	2004/0030601	02-12-2004	Pond, *et al.*
	A23	2002/0073027	06-13-2002	Hui, *et al.*
	A24	2008/0181154	07-31-2008	Sherman
	A25	2008/0189394	08-07-2008	Ross, *et al.*
	A26	2004/0264466	12-30-2004	Huang
	A27	2004/0190468	09-30-2004	Saijonmaa
	A28	2003/0045272	03-06-2003	Burr
	A29	2002/0188565	12-02-2002	Nakamura
	A30	2008/0182591	07-31-2008	Krikorian
	A31	2008/0109741	05-08-2008	Messing, *et al.*
	A32	2006/0085419	04-20-2006	Rosen

EXAMINER	DATE CONSIDERED
/Ashford Hayles/	06/11/2010

ALL REFERENCES CONSIDERED EXCEPT WHERE LINED THROUGH. /A.H./

IN THE UNITED STATES PATENT AND TRADEMARK OFFICE

Applicants:	James Arthur Proctor, Jr. and James Arthur Proctor, III		
Application No.:	12/364,823	Group:	3687
Filed:	February 3, 2009	Examiner:	Hayles, A.S.
Confirmation No:	4791		
For:	VISUAL IDENTIFICATION INFORMATION USED AS CONFIRMATION IN A WIRELESS COMMUNICATION		

CERTIFICATE OF MAILING OR TRANSMISSION

I hereby certify that this correspondence is being deposited with the United States Postal Service with sufficient postage as First Class Mail in an envelope addressed to Commissioner for Patents, P.O. Box 1450, Alexandria, VA 22313-1450, or is being facsimile transmitted to the United States Patent and Trademark Office on:

_____ _____
Date Signature

_____
Typed or printed name of person signing certificate

AMENDMENT

Mail Stop Amendment
Commissioner for Patents
P.O. Box 1450
Alexandria, VA 22313-1450

Sir:

This Amendment is being filed in response to the Office Action mailed from the U.S. Patent and Trademark Office on June 16, 2010 in the above-identified application. Reconsideration and further examination are requested.

Please amend the application as follows:

Amendments to the Claims

Please amend Claims 1-3, 5-9 and 12-14. Please add new Claims 15-20. The Claim Listing below will replace all prior versions of the claims in the application:

Claim Listing

1. (Currently Amended) A method for operating a first wireless communication device comprising:

receiving ~~a wireless~~ an identifier from a second wireless device using a ~~peer-to-peer~~ first wireless protocol, the identifier relating to an object or entity associated with the second wireless device;

connecting to a server using a second wireless protocol different from the ~~peer-to-peer~~ first wireless protocol;

sending the received ~~wireless~~ identifier to the server; and

receiving ~~further~~ information from the server using the second wireless protocol, the ~~further~~ information also associated with [[an]] the entity or object associated with the second wireless device, wherein the ~~further~~ information additionally includes a visual identification of [[an]] the object or entity associated with the second device.

2. (Currently Amended) The method of claim 1 additionally comprising:

notifying a user of the first wireless device of the proximity of the second wireless device or of the proximity of the object or entity associated with the second device.

3. (Currently Amended) The method of claim 1 further comprising:

sending a message to the server, the message representing a request to forward a message to the ~~first~~ second wireless device.

4. (Original) The method of claim 1 additionally comprising

sending a message to the server as part of a relationship brokering function coordinated by the server.

5. (Currently Amended) The method of claim 1 wherein the server further performs the steps of:

coordinating with an application running on at least one of the of the first and second wireless devices, to perform a point of sale transaction utilizing user input received from at least one of the first and second wireless devices;

performing one or more confirmations of steps of the transaction; and

wherein at least one confirmation step additionally comprises:

sending a message to one of the first or second wireless devices to cause the application to display an identifying picture related to one of the devices, prior to completion of the point of sale transaction.

6. (Currently Amended) The method of claim 5 wherein both the first and second wireless devices perform at least one transaction confirmation step.

7. (Currently Amended) The method of claim 6 wherein the server further performs one or more of:

authorizing the transaction to a third party;

interacting with a point of sale application to associate an itemized list of items with ~~a detected~~ the second device;

confirming with the application on the second device, thereby requiring user input that the bill of goods list is correct;

storing information related to a detected account identity of the second device; and/or

storing information relating to inventory in a database.

8. (Currently Amended) A first wireless communication device comprising:

a ~~peer~~ first receiver, for receiving an ~~wireless~~ identifier from a second wireless device using a ~~peer-to-peer~~ first wireless protocol;

a server transmitter, for sending the received ~~wireless~~ identifier to a server using a second wireless protocol; and

a server receiver, for receiving ~~further~~ information from the server using the second wireless protocol, the ~~further~~ information associated with an entity or object associated with the second wireless device, wherein the further information additionally includes a visual identification of [[an]] the object or entity associated with the second device.

9. (Currently Amended) The device of claim 8 additionally comprising:
a display, for notifying a user of the first wireless device of the proximity of the second wireless device, or of the proximity of the object or entity.

10. (Original) The device of claim 8 wherein the server transmitter further sends a message to the server representing a request to forward a message to the second wireless device.

11. (Original) The device of claim 8 wherein the server transmitter further sends a message to the server as part of a relationship brokering function coordinated by the server.

12. (Currently Amended) The device of claim 8 wherein the server has a processor configured to:

coordinate with an application running on at least one of the of the first and second wireless devices, to perform a point of sale transaction utilizing user input received from at least one of the first and second wireless devices;

perform one ore more confirmations of steps of the transaction; and

a device transmitter, for sending a message to one of the first or second wireless devices to cause the application to display an identifying picture related to one of the devices, prior to completion of the point of sale transaction.

13. (Currently Amended) The device of claim 12 wherein both the first and second devices perform at least one transaction confirmation step after displaying the identifying picture.

14. (Currently Amended) The device of claim 13 wherein the processor in the server:

authorizes the transaction to a third party;

interacts with a point of sale application to associate an itemized list of items with ~~a detected~~ the second device;

confirms with the application on the second device, thereby requiring user input that the bill of goods list is correct;

stores information related to a detected account identity of the second device; and/or

stores information relating to inventory in a database.

15. (New) The method of claim 1 wherein the visual identification is an image of the object or entity associated with the second device.

16. (New) The apparatus of claim 8 wherein the visual identification is an image of a person, a merchant, a merchant logo or a vending machine associated with the second wireless device.

17. (New) A method for operating a first wireless device associated with a consumer, the method comprising:

searching for device identifiers for other wireless devices in proximity to the first wireless device;

receiving one or more device identifiers from a second wireless device, the device identifiers being received using a first wireless protocol over a first wireless link;

transmitting a request message to a server using a second wireless protocol over a second wireless link, the request message being a request for further information relating to whether one or more merchants are associated with the one or more device identifiers; receiving a response message from a server indicating that one or more merchant services are available;

displaying information concerning the available merchant services to the user of the first wireless device;

receiving an input from the user indicating that the user has selected a specific merchant to engage in a transaction;

transmitting a request message to a server requesting a transaction with the specific merchant;

receiving a response from a server providing a visual information relating to the identity of the specific merchant, the visual information sufficient for the user to independently determine the identity of the merchant;

displaying the visual information to the user; and

receiving a further input from the user acknowledging that the user has confirmed the identity of the merchant.

18. (New) The method of claim 17 wherein the first wireless protocol is either a Bluetooth or wireless local area network protocol.

19. (New) The method of claim 17 wherein the second wireless protocol is selected from the group consisting of as GPRS, EDGE, 1xEV-DO, IS-2000, Wi-Max, and LTE.

20. (New) The method of claim 17 wherein the further information additionally comprises a picture of the specific merchant and/or other information relating to the particular merchant's business license.

REMARKS

Claims 1-20 are now in the application with new claims 15-20 being added by way of the amendment above. No claim has been allowed.

Claims 7 and 14 were rejected under 35 U.S.C. 112, second paragraph as being indefinite. The amendments to claims 7 and 14 now make it clear that the server is detecting the presence of the second wireless device. It is believed that this rejection has now been overcome.

Claims 1-14 were rejected under 35 U.S.C. 103(a) as supposedly being obvious in view of Hammad (U.S. Patent Publication 2009/0271211). The Hammad system is configured differently, operates differently, and has a different purpose than Applicants' invention. Especially with the amendments to the claims entered above, it is believed that these differences are now more particularly recited in the claims. Therefore, the claims should now be allowed.

Before discussing the significance of the claim amendments, the purpose, functions and structure of the Hammad system should be reviewed. Hammad's focus is on the use of a "supplementary data field" as a vehicle for providing additional information during an exchange of authorization request messages between a point-of-sale terminal and a credit issuing bank. For example, the supplementary data field may be "Field 55" as defined in Visa Contactless Payment Specification. The supplementary data field can be used for a variety of services that enhance traditional transactions. The supplementary data field may include data tags, such as a "user exclusive data" tag, or a "form factor indicator" tag. The user exclusive data may relate to a characteristic of a portable communication device that the user is using (e.g., a phone number) or may relate to a characteristic of the user (e.g., the consumer's annual income) or preferences (e.g., a preference for receiving alerts when transactions are conducted). (Hammad, paragraphs [0018]-[0019], [0022]-[0023]). Table 1 shows the various types of data that may be included in a customer exclusive data tag (Hammad, paragraph [0025]).

In a system according to Hammad's description (with reference to Figure 1 of Hammad), a portable consumer device 32 may take various forms such as a cellular telephone, a credit card,

a key fob, a personal digital assistant, a pager, transponder, security cards, debit cards and the like. (Hammad, paragraph [0031]-[0032]) A payment processing network 26 includes data processing subsystems and networks used to support and deliver transaction authorization services, clearing and settlement services. An example payment processing network may be the VisaNet tm payment processing network. The payment processing network 26 may include a server computer. The server computer may comprise computer code for receiving an authorization request message containing the customer exclusive data that was previously stored in the consumer device (Hammad, paragraph [0035]-[0037]).

The merchant 22 may receive communications from an access device 34 that can interact with a portable consumer device 32. The merchant access devices 34 can be a point-of-sale device, cellular phone, PDA, personal computer tablet PC, handheld leaders, set top boxes, electronic cash registers, automated teller machines, virtual cash registers, kiosks and other access systems (Hammad, paragraph [0038]).

In a typical purchase transaction, a consumer 30 purchases a good or service at the merchant 22, using a portable consumer device 32 to interact with the access device 34. For example, a consumer 30 may take their credit card and swipe it through a point-of –sale terminal. An authorization request message is then forwarded to a payment processing network 26. The payment processing network 26 forwards the authorization request to the issuer 28 of the portable consumer device 32. After the issuer 28 receives the authorization request, the issuer 28 sends an authorization response back to the payment processing network 26. After the merchant 22 receives the authorization response, the access device 34 at the merchant 22 may then provide the authorization response back to the consumer 30. The response may then be displayed on the access device 34 or for example, may be printed on a receipt. (See Hammad, paragraphs [0040]-[0043])

A contactless element 32(g) forming a portion of the consumer device 32 is capable of transmitting and receiving data using a near field communication capability, such as RFID, Bluetooth, Infrared or other wireless data transfer capability. This short range facility used to exchange data between the consumer device 32 and a wireless interrogation device such as may be associated with the merchant's access device 34. The consumer device 32 is also capable of

communicating and transferring data and/or control instructions via a cellular network. (Hammad, paragraph [0049])

After the customer exclusive data is loaded into the consumer device, it may be used in a transaction. When making a purchase, the consumer, for example, passes his consumer device 32 through or by the access device 34. Customer exclusive data stored on the consumer's mobile device and account information such as an account number associated with the issuer, may then pass from the portable device 32 to the access device 34. A reader in the access device 34 then reads the customer exclusive data tag and generates an authorization request message to the payment processing network 26 (Hammad, paragraph [0057]). An authorization request message is then forwarded to the issuer 28 for approval. After this, the issuer 28 sends an authorization response back, as has been previously described. (Hammad, paragraph [0060])

Thus Hammad is concerned with providing additional data from a consumer device to a merchant, to enable that merchant to acquire information about the customer. The merchant then uses that information when requesting authentication from a payment processing network. This is accomplished by the access device reading the additional information from the consumer device and then providing it to the payment processing network.

In contrast to this, the Applicants' invention is concerned with permitting consumer and merchant devices to use a central server facility to determine the identities of each other. The process and system for detecting wireless devices allows for increased security, fraud restraint, and allows the consumer to control disclosure of his personal information. Instead of using information related to a user or their device being stored on the device itself (as in Hammad), a central server is used for this identification step. See the Applicants' discussion at the bottom of page 6, line 24 through page 7, line 16.

Identity verification includes visual verification of the identity of a party to which information or content is to be provided, by sending visual information from a trusted server (i.e.; in one example, a picture of the merchant is provided to the customer). Using the wireless identifier, verification is thus performed anonymously such that no personal information is disclosed between the parties prior their deciding to enter in some further engagement (such as inclusion on a friend list or entering into a commercial transaction). In an example where the further engagement is a commercial transaction, the invention enables electronic payments for

individuals who are in close proximity to one another using the central server as a trusted third party, to particularly identify and specify the party which they wish to engage in a transaction. (See page 7, lines 18 through 25.)

More particularly, as set forth in claim 1, the Applicant's invention involves having a first wireless device (such as a user cellular telephone) receive an identifier from a second wireless device using a first wireless protocol. The second wireless device, for example, may be a broadcast device, such as a point-of-sale terminal in a merchant location. The second wireless device may also be another person using their own personal cellular phone, a street merchant using a wireless laptop, or even a wireless equipped vending machine. The first device then connects to a central server using a wireless protocol that is different from the wireless protocol on which the wireless identifier was received. The wireless identifier is then sent to the central server using the second protocol. The server then returns, to the first wireless device visual information associated with the identifier of the second wireless device.

Figure 1 of the Applicants' disclosure and the attendant message flow diagram of Figures 8A and 8B describe an embodiment of this invention in more detail. Here, two individuals are considering entering into a financial transaction. The individuals may be a customer and a street vendor. Each person has a personal device, items 106 and 108 respectively. In this example, the individual's device 106 sees the vendor's device 108 and the vendor's device 108 responds over first, short range, wireless link (such as Bluetooth) with an identifier that confirms the vendor also engages in the same protocols. In step 804, the customer device then performs an identifier search process, by sending the device identifier (DI 2) it received from the second wireless device to the server 801 (also represented by item 100 in Figure 1) using the cellular data link or other wide area network 104. By sending the identifier, the first wireless device is requesting information related to DI 2 and its relevance to the nearby entity (e.g., the street vendor) associated with second device 802. The customer, having an account enabled with electronic payments and money to purchase an item that the vendor has for sale, makes another input to his device indicating that he wishes to make a purchase. (See step 808). The customer device then sends a message (step 809) to the central server directing the server to perform the search for the merchant. Eventually, in step 813, the server, now having received the request and a list of merchants including DI 2, looks up account information associated with DI 2 and determines that

that entity is a merchant and that the merchant is now in proximity of the user device DI 1. The server then sends a message to device 1, stating that merchant services are available in its proximity with the list of available merchant information including additional information relating to the merchant entity EI 2 (the message sent in step 814). The consumer may then provide a further input in step 815 by pressing a soft key on his touch screen selecting that he wishes to engage in a transaction with a specific merchant EI 2. In step 816, user device DI 1 then sends a message to the server requesting a transaction with EI 2.

The server then responds with a message 817 to the device 1 not only confirming receipt of the requested transaction but also sending visual information to permit the consumer to independently confirm the identity of EI 2 associated with device 2 step 803. The visual identifying information can include an image of the street merchant, the merchant's logo, or their mobile vendor cart or kiosk. For example, a photograph sent in message 817 may include a picture of the merchant and his city-issued business license. The consumer then compares this photograph and license with the person and/or the document they actually see in front of them. This enables the consumer to then verify that the street vendor they are looking at is indeed the same person authorized by the central server to use the second wireless device. The consumer EI 1 then provides an input on his device in step 818 confirming that he wishes to complete a transaction with the merchant entity EI 2 and the transaction can ensue. (See the discussion at page19, line 3 through page 21, line 26.)

In further steps, the merchant may also similarly request and confirm her desire to enter into a transaction by receiving and verifying that the picture of the consumer is indeed the person that is standing before her. (See the discussion at page 21, line 27 through page 22, line 14.) It is not necessary that the individual's name be passed to the merchant for the merchant to therefore be able to provide confirmation of the identity of the consumer thus providing a level of anonymity and further security to the transaction.

Therefore, in Hammad:

(a) the mobile devices store the "other information";

(b) the "other information" is sent over the same protocol as was used for the "identifier";

(b) there is no suggestion to use visual identifiers that relate to an object or entity (such as an image)

On the other hand, in Applicant's claimed invention:

(a) the central server originates the "other information"

(b) the other information is sent over a different wireless link using a different protocol than the wireless link and protocol used for initially sending the identifier;

(c) visual identifiers are sent down to the personal devices from a trusted source, to enable a user of the first device to confirm the identity of the user of the second device.

For at least these reasons, claims 1-14 should be allowed over Hammad.

New claims 15 and 16 depend from claim 1 and claim 8 and therefore should also be allowed for the same reasons.

New claims 17-20 are presented that specifically recites selected method steps shown in Figs. 8a and 8b and described in the corresponding text of the application as filed at pages 19-24. These claims should also be allowed over Hammad for the reasons stated above.

Claims 5-7 and 12-14 were additionally rejected under 35 U.S.C. 103(a) as supposedly being obvious in view of Hammad and in further view of Van Bosch (U.S. Patent Publication 2008/0313079). Van Bosch was cited for the additional proposition of teaching coordination with an application running on wireless devices to complete a transaction and supposedly display an identifying picture.

In the van Bosch prior art, the images are stored on the personal device and thus not at a trusted server. While it is true that in van Bosh, the server does process the image in an initial provisioning step, it is solely for provisioning, and not used by the server during any subsequent transaction. Furthermore, the mobile to server link is not used during the transaction itself, making the delivery of any such image from a trusted party impossible.

In contrast to this, in the Applicants' invention, visual identification is provided from the server to the wireless devices, as part of the claimed transaction process. This is significantly different as the image, to be used in a verification process in one example, is provided by the trusted third party resulting in a significantly reduced possibility of fraud.

In view of the foregoing arguments and amendments, reconsideration and allowance in the Applicants' claims is respectfully requested.

Information Disclosure Statement

An Information Disclosure Statement (IDS) is being filed concurrently herewith. Entry of the IDS is respectfully requested.

CONCLUSION

In view of the above amendments and remarks, it is believed that all claims are in condition for allowance, and it is respectfully requested that the application be passed to issue. If the Examiner feels that a telephone conference would expedite prosecution of this case, the Examiner is invited to call the undersigned.

Respectfully submitted,

HAMILTON, BROOK, SMITH & REYNOLDS, P.C.

By /David J. Thibodeau, Jr., Reg. No. 31671/
David J. Thibodeau, Jr.
Registration No. 31,671
Telephone: (978) 341-0036
Facsimile: (978) 341-0136

Concord, MA 01742-9133
Date: September 16, 2010

DJT/nzk/(ns)
September 14, 2010

PATENT APPLICATION
DOCKET NO.: 4394.1003-000

IN THE UNITED STATES PATENT AND TRADEMARK OFFICE

Applicant:	James Arthur Proctor, Jr., James Arthur Proctor and III		
Application No.:	12/364,823	Group:	3687
Filed:	February 3, 2009	Examiner:	Hayles, Ashford S.
Confirmation No.:	4791		
For:	VISUAL IDENTIFICATION INFORMATION USED AS CONFIRMATION IN A WIRELESS COMMUNICATION		

CERTIFICATE OF MAILING OR TRANSMISSION

I hereby certify that this correspondence is being deposited with the United States Postal Service with sufficient postage as First Class Mail in an envelope addressed to Commissioner for Patents, P.O. Box 1450, Alexandria, VA 22313-1450, or is being facsimile transmitted to the United States Patent and Trademark Office on:

_____ _____
Date Signature

_____
Typed or printed name of person signing certificate

TRANSMITTAL LETTER FOR
SUPPLEMENTAL INFORMATION DISCLOSURE STATEMENT

Mail Stop Amendment
Commissioner for Patents
P.O. Box 1450
Alexandria, VA 22313-1450

Sir:

This Information Disclosure Statement is submitted:

☐ under 37 CFR 1.97(b), or
(Within any one of the following time periods: three months of filing national application (other than a CPA) or date of entry of the national stage in an international application; or before the mailing date of a first office action on the merits; or before the mailing of a first office action after the filing of a Request for Continued Examination).

☒ under 37 CFR 1.97(c) together with either:
- ☐ a Statement under 37 CFR 1.97(e), as checked below, or
- ☒ a $180.00 fee under 37 CFR 1.17(p), or
  (After the 37 CFR 1.97(b) time period, but before any of a final action, notice of allowance, or an action that closes prosecution, whichever occurs first)

☐ under 37 CFR 1.97(d) together with:
- ☐ a Statement under 37 CFR 1.97(e), as checked below, and
- ☐ a $180.00 fee under 37 CFR 1.17(p), or
  (Filed after final action, notice of allowance, whichever occurs first, or if prosecution otherwise closes, but on or before payment of the issue fee)

☐ under 37 CFR 1.97(i):
Applicant requests that the IDS and cited reference(s) be placed in the application file.
(Filed after payment of issue fee)

Statement Under 37 CFR 1.97(e)

☐ Each item of information contained in this Information Disclosure Statement was first cited in any communication from a foreign patent office in a counterpart foreign application not more than three months prior to the filing of this Information Disclosure Statement; or

☐ No item of information contained in this Information Disclosure Statement was cited in a communication from a foreign patent office in a counterpart foreign application, and, to the knowledge of the undersigned, after making reasonable inquiry, no item of information contained in the information disclosure statement was known to any individual designated in 37 CFR 1.56(c) more than three months prior to the filing of this Information Disclosure Statement.

Statement Under 37 CFR 1.704(d) (Patent Term Adjustment)
Applies to original applications (other than design) filed on or after May 29, 2000

☐ Each item of information contained in the Information Disclosure Statement was cited in a communication from a foreign patent office in a counterpart application and this communication was not received by any individual designated in § 1.56(c) more than thirty days prior to the filing of the Information Disclosure Statement.

☒ Enclosed herewith is a Listing of References:

- ☒ Copies of the cited references are enclosed except as indicated below.
- ☒ Copies of issued U.S. patents and published U.S. applications are not required and are not being provided.
- ☐ Copies of the cited references submitted with an Information Disclosure Statement in prior application, U.S. Application No. [ ], to which priority under 35 U.S.C. 120 is claimed, are not required under 37 CFR 1.98(d)(1) and (2) and are thus not provided.
- ☐ Pending non-published applications are not being provided, since the applications are available to the examiner.

☐ The listed references were cited in the enclosed Search Report in counterpart foreign application [add application number], which is listed in the attached Listing of References.

☐ The "concise explanation" requirement (non-English references) for reference(s) [ ] under 37 CFR 1.98(a)(3) is satisfied by:

- ☐ the explanation provided on the attached sheet.
- ☐ the explanation provided in the Specification.
- ☐ submission of the enclosed International Search Report.
- ☐ submission of the enclosed English-language version of a foreign Search Report and/or foreign Office Action.
- ☐ the enclosed English language abstract.

Method of payment:

☐ Authorization is NOT granted to charge any fees which may be due in this matter to our Deposit Account.

☒ Please charge Deposit Account 08-0380 in the amount of $180.

☐ A check for the fee noted above is enclosed, or the fee has been included in the check with the accompanying Reply.

☒ Please charge any deficiency in fees and credit any overpayment to Deposit Account 08-0380.

Respectfully submitted,

HAMILTON, BROOK, SMITH & REYNOLDS, P.C.

By /David J. Thibodeau, Jr., Reg. No. 31671/

David J. Thibodeau, Jr.
Registration No. 31,671
Telephone: (978) 341-0036
Facsimile: (978) 341-0136

Concord, MA 01742-9133
Dated: September 16, 2010

Substitute for form 1449B/PTO **SUPPLEMENTAL INFORMATION DISCLOSURE STATEMENT IN AN APPLICATION** **LISTING OF REFERENCES** **(September 14, 2010)** (Use several sheets if necessary)	ATTORNEY DOCKET NO. 4394.1003-000		APPLICATION NO. 12/364,823
	FIRST NAMED INVENTOR James Arthur Proctor, Jr.		FILING DATE February 3, 2009
	EXAMINER Hayles, Ashford S.	CONFIRMATION NO. 4791	GROUP 3687

U.S. PATENT DOCUMENTS

Examiner's Initials	Ref. No.	DOCUMENT NUMBER Number-Kind Code (if known)	ISSUE DATE / PUBLICATION DATE MM-DD-YYYY	NAME OF PATENTEE OR APPLICANT OF CITED DOCUMENT
	A33	7,714,712	05-11-2010	Emigh, *et al.*
	A34	7,330,112	02-12-2008	Emigh, *et al.*

We are not listing separately any prior U.S. Patent Office communications regarding the cited Documents(s) because the Examiner has access to any such actions through PAIR.

EXAMINER	DATE CONSIDERED

SIDS

Substitute for form 1449B/PTO **SUPPLEMENTAL INFORMATION DISCLOSURE STATEMENT IN AN APPLICATION** **LISTING OF REFERENCES** **(September 14, 2010)** (Use several sheets if necessary)	ATTORNEY DOCKET NO. 4394.1003-000		APPLICATION NO. 12/364,823
	FIRST NAMED INVENTOR James Arthur Proctor, Jr.		FILING DATE February 3, 2009
	EXAMINER Hayles, Ashford S.	CONFIRMATION NO. 4791	GROUP 3687

Examiner's Initials	Ref. No.	**OTHER DOCUMENTS** *(Including Author, Title, Date, Pertinent Pages, Etc.)*
	C1	Office Action from related U.S. Application Number 12/364,819, dated August 26, 2010.
	C2	Office Action from related U.S. Application Number 12/364,828, dated May 14, 2010.
	C3	Office Action from related U.S. Application Number 12/364,938, dated May 13, 2010.
	C4	
	C5	
	C6	
	C7	
	C8	
	C9	
	C10	
	C11	
	C12	
	C13	
	C14	
	C15	
	C16	
	C17	
	C18	
	C19	
	C20	

EXAMINER	DATE CONSIDERED

SIDS

Electronic Patent Application Fee Transmittal

Application Number:	12364823
Filing Date:	03-Feb-2009
Title of Invention:	VISUAL IDENTIFICATION INFORMATION USED AS CONFIRMATION IN A WIRELESS COMMUNICATION
First Named Inventor/Applicant Name:	James Arthur Proctor
Filer:	David J. Thibodeau/Nadine Kush
Attorney Docket Number:	4394.1003-000

Filed as Large Entity

Utility under 35 USC 111(a) Filing Fees

Description	Fee Code	Quantity	Amount	Sub-Total in USD($)
Basic Filing:				
Pages:				
Claims:				
Miscellaneous-Filing:				
Petition:				
Patent-Appeals-and-Interference:				
Post-Allowance-and-Post-Issuance:				
Extension-of-Time:				

Description	Fee Code	Quantity	Amount	Sub-Total in USD($)
Miscellaneous:				
Submission- Information Disclosure Stmt	1806	1	180	180
		Total in USD ($)		**180**

Electronic Acknowledgement Receipt

EFS ID:	8432913
Application Number:	12364823
International Application Number:	
Confirmation Number:	4791
Title of Invention:	VISUAL IDENTIFICATION INFORMATION USED AS CONFIRMATION IN A WIRELESS COMMUNICATION
First Named Inventor/Applicant Name:	James Arthur Proctor
Customer Number:	21005
Filer:	David J. Thibodeau/Nadine Kush
Filer Authorized By:	David J. Thibodeau
Attorney Docket Number:	4394.1003-000
Receipt Date:	16-SEP-2010
Filing Date:	03-FEB-2009
Time Stamp:	17:21:56
Application Type:	Utility under 35 USC 111(a)

Payment information:

Submitted with Payment	yes
Payment Type	Deposit Account
Payment was successfully received in RAM	$180
RAM confirmation Number	4043
Deposit Account	080380
Authorized User	

File Listing:

Document Number	Document Description	File Name	File Size(Bytes)/ Message Digest	Multi Part /.zip	Pages (if appl.)

1	NPL Documents	43941003000RefC1.PDF	597675 a8b9b236a2c39a4724be95c652cfb8aed88ca4fd	no	15
Warnings:					
Information:					
2	NPL Documents	43941003000RefC2.PDF	685221 96ae808c04eb5297de922d269c95b118c9c0e20a	no	16
Warnings:					
Information:					
3	NPL Documents	43941003000RefC3.PDF	449751 9f08ba9389953f356258964985dd79fd8d908c68	no	10
Warnings:					
Information:					
4	Transmittal Letter	43941003000Trans.pdf	114506 60c1e0b047abc0e4c20866240d76dc36802a6013	no	3
Warnings:					
Information:					
5		43941003000Amd.pdf	106082 4fe8659c2adce981ec35c23fd1eaef3575be5c7b	yes	13
	Multipart Description/PDF files in .zip description				
	Document Description		**Start**	**End**	
	Amendment/Req. Reconsideration-After Non-Final Reject		1	1	
	Claims		2	6	
	Applicant Arguments/Remarks Made in an Amendment		7	13	
Warnings:					
Information:					
6	Transmittal Letter	43941003000IDS.pdf	86898 ee67b0e0a46a573364024a807f8cd506efa1e2b3	no	3
Warnings:					
Information:					
7	Information Disclosure Statement (IDS) Filed (SB/08)	43941003000List.pdf	82149 52d02ce2830aba2c083f8fb5542b69fa0ab350ea	no	2
Warnings:					
Information:					
This is not an USPTO supplied IDS fillable form					

8	Fee Worksheet (PTO-875)	fee-info.pdf	30369 5eb37c66a0d34473b599007954f4f2d85ea48da7	no	2
Warnings:					
Information:					
			Total Files Size (in bytes):	2152651	

This Acknowledgement Receipt evidences receipt on the noted date by the USPTO of the indicated documents, characterized by the applicant, and including page counts, where applicable. It serves as evidence of receipt similar to a Post Card, as described in MPEP 503.

<u>New Applications Under 35 U.S.C. 111</u>
If a new application is being filed and the application includes the necessary components for a filing date (see 37 CFR 1.53(b)-(d) and MPEP 506), a Filing Receipt (37 CFR 1.54) will be issued in due course and the date shown on this Acknowledgement Receipt will establish the filing date of the application.

<u>National Stage of an International Application under 35 U.S.C. 371</u>
If a timely submission to enter the national stage of an international application is compliant with the conditions of 35 U.S.C. 371 and other applicable requirements a Form PCT/DO/EO/903 indicating acceptance of the application as a national stage submission under 35 U.S.C. 371 will be issued in addition to the Filing Receipt, in due course.

<u>New International Application Filed with the USPTO as a Receiving Office</u>
If a new international application is being filed and the international application includes the necessary components for an international filing date (see PCT Article 11 and MPEP 1810), a Notification of the International Application Number and of the International Filing Date (Form PCT/RO/105) will be issued in due course, subject to prescriptions concerning national security, and the date shown on this Acknowledgement Receipt will establish the international filing date of the application.

IN THE UNITED STATES PATENT AND TRADEMARK OFFICE

Applicants:	James Arthur Proctor, Jr. and James Arthur Proctor, III		
Application No.:	12/364,823	Group:	3687
Filed:	February 3, 2009	Examiner:	Hayles, A.S.
Confirmation No:	4791		
For:	VISUAL IDENTIFICATION INFORMATION USED AS CONFIRMATION IN A WIRELESS COMMUNICATION		

CERTIFICATE OF MAILING OR TRANSMISSION

I hereby certify that this correspondence is being deposited with the United States Postal Service with sufficient postage as First Class Mail in an envelope addressed to Commissioner for Patents, P.O. Box 1450, Alexandria, VA 22313-1450, or is being facsimile transmitted to the United States Patent and Trademark Office on:

_____ _____
Date Signature

_____
Typed or printed name of person signing certificate

Mail Stop Amendment
Commissioner for Patents
P.O. Box 1450
Alexandria, VA 22313-1450

Sir:

Transmitted herewith is an Amendment for filing in the above-identified application.

☒ Small entity status of this application under 37 CFR 1.9 and 1.27 has been established by a Small Entity Statement previously submitted.

☐ A Small Entity Statement to establish small entity status under 37 CFR 1.9 and 1.27 is enclosed.

The claims fee has been calculated as shown below:

	CLAIMS REMAINING AFTER AMENDMENT		HIGHEST NO. PREVIOUSLY PAID FOR	PRESENT EXTRA	SMALL ENTITY RATE	SMALL ENTITY ADDIT. FEE	OR	OTHER THAN SMALL ENTITY RATE	OTHER THAN SMALL ENTITY ADDIT. FEE
TOTAL	20	MINUS	* 20	0	X $ 26	$ 0		X $52	$
INDEP	3	MINUS	** 3	0	X $110	$ 0		X $220	$
☐ FIRST PRESENTATION OF MULTIPLE DEP. CLAIM					+ $195	$		+ $390	$
			* not fewer than 20 ** not fewer than 3		TOTAL =	$ 0		TOTAL =	$ 0

The Application Size Fee has been calculated as shown below:
(Effective for cases filed on or after December 8, 2004)

Actual Sheets (Including current amendment)	Highest No. of Sheets Paid For (At least 100)	No. of Additional Units Required (Increments of 50 sheets)	SMALL ENTITY Rate	SMALL ENTITY Total Amount Owed	OTHER THAN SMALL ENTITY Rate	OTHER THAN SMALL ENTITY Total Amount Owed	Payment Sufficient for up to
61	100	0	X $135	$0	X $270	$[ ]	100 Sheets

Petition for Extension of Time

☐ Applicant hereby petitions to extend the time to respond to the [ ] dated [ ] for [ ] month(s) from [ ] to [ ]. The appropriate fee is set forth below.

☐ *[For action-specific language in an extension of time, select the appropriate option from the Firm Templates]*

Please charge Deposit Account No. 08-0380 for the following fees:

☐	Petition for [ ] month Extension of Time	$	
☐	Claims Fee	$	
☐	Application Size Fee	$	
☒	Other Fees:		
	Supplemental Information Disclosure Statement	$	180.00
		$	
	TOTAL:	$	180.00

A check is enclosed in payment of the following fees:

☐	Petition for [ ] month Extension of Time	$	
☐	Claims Fee	$	
☐	Application Size Fee	$	
☐	Other Fees:		
		$	
		$	
	TOTAL:	$	

☒ Please charge any deficiency or credit any overpayment in the fees that may be due in this matter to Deposit Account No. 08-0380.

Respectfully submitted,

HAMILTON, BROOK, SMITH & REYNOLDS, P.C.

By /David J. Thibodeau, Jr., Reg. No. 31671/
David J. Thibodeau, Jr.
Registration No.: 31,671
Telephone (978) 341-0036
Facsimile (978) 341-0136

Concord, Massachusetts 01742-9133
Dated: September 16, 2010

PTO/SB/06 (07-06)
Approved for use through 1/31/2007. OMB 0651-0032
U.S. Patent and Trademark Office; U.S. DEPARTMENT OF COMMERCE
Under the Paperwork Reduction Act of 1995, no persons are required to respond to a collection of information unless it displays a valid OMB control number.

PATENT APPLICATION FEE DETERMINATION RECORD Substitute for Form PTO-875	Application or Docket Number 12/364,823	Filing Date 02/03/2009	☐ To be Mailed

APPLICATION AS FILED – PART I

FOR	(Column 1) NUMBER FILED	(Column 2) NUMBER EXTRA	SMALL ENTITY ☒ RATE ($)	SMALL ENTITY ☒ FEE ($)	OR	OTHER THAN SMALL ENTITY RATE ($)	OTHER THAN SMALL ENTITY FEE ($)
☒ BASIC FEE (37 CFR 1.16(a), (b), or (c))	N/A	N/A	N/A	82		N/A	
☐ SEARCH FEE (37 CFR 1.16(k), (i), or (m))	N/A	N/A	N/A			N/A	
☐ EXAMINATION FEE (37 CFR 1.16(o), (p), or (q))	N/A	N/A	N/A			N/A	
TOTAL CLAIMS (37 CFR 1.16(i))	minus 20 =	*	X $ =		OR	X $ =	
INDEPENDENT CLAIMS (37 CFR 1.16(h))	minus 3 =	*	X $ =			X $ =	
☐ APPLICATION SIZE FEE (37 CFR 1.16(s))	If the specification and drawings exceed 100 sheets of paper, the application size fee due is $250 ($125 for small entity) for each additional 50 sheets or fraction thereof. See 35 U.S.C. 41(a)(1)(G) and 37 CFR 1.16(s).						
☐ MULTIPLE DEPENDENT CLAIM PRESENT (37 CFR 1.16(j))							
* If the difference in column 1 is less than zero, enter "0" in column 2.			TOTAL	82		TOTAL	

APPLICATION AS AMENDED – PART II

AMENDMENT	09/16/2010	(Column 1) CLAIMS REMAINING AFTER AMENDMENT		(Column 2) HIGHEST NUMBER PREVIOUSLY PAID FOR	(Column 3) PRESENT EXTRA	SMALL ENTITY RATE ($)	SMALL ENTITY ADDITIONAL FEE ($)	OR	OTHER THAN SMALL ENTITY RATE ($)	OTHER THAN SMALL ENTITY ADDITIONAL FEE ($)
	Total (37 CFR 1.16(i))	* 20	Minus	** 20	= 0	X $26 =	0	OR	X $ =	
	Independent (37 CFR 1.16(h))	* 3	Minus	***3	= 0	X $110 =	0	OR	X $ =	
	☐ Application Size Fee (37 CFR 1.16(s))									
	☐ FIRST PRESENTATION OF MULTIPLE DEPENDENT CLAIM (37 CFR 1.16(j))							OR		
						TOTAL ADD'L FEE	0	OR	TOTAL ADD'L FEE	

AMENDMENT		(Column 1) CLAIMS REMAINING AFTER AMENDMENT		(Column 2) HIGHEST NUMBER PREVIOUSLY PAID FOR	(Column 3) PRESENT EXTRA	RATE ($)	ADDITIONAL FEE ($)	OR	RATE ($)	ADDITIONAL FEE ($)
	Total (37 CFR 1.16(i))	*	Minus	**	=	X $ =		OR	X $ =	
	Independent (37 CFR 1.16(h))	*	Minus	***	=	X $ =		OR	X $ =	
	☐ Application Size Fee (37 CFR 1.16(s))									
	☐ FIRST PRESENTATION OF MULTIPLE DEPENDENT CLAIM (37 CFR 1.16(j))							OR		
						TOTAL ADD'L FEE		OR	TOTAL ADD'L FEE	

* If the entry in column 1 is less than the entry in column 2, write "0" in column 3.
** If the "Highest Number Previously Paid For" IN THIS SPACE is less than 20, enter "20".
*** If the "Highest Number Previously Paid For" IN THIS SPACE is less than 3, enter "3".
The "Highest Number Previously Paid For" (Total or Independent) is the highest number found in the appropriate box in column 1.

Legal Instrument Examiner:
/GWENDOLYN MYERS/

This collection of information is required by 37 CFR 1.16. The information is required to obtain or retain a benefit by the public which is to file (and by the USPTO to process) an application. Confidentiality is governed by 35 U.S.C. 122 and 37 CFR 1.14. This collection is estimated to take 12 minutes to complete, including gathering, preparing, and submitting the completed application form to the USPTO. Time will vary depending upon the individual case. Any comments on the amount of time you require to complete this form and/or suggestions for reducing this burden, should be sent to the Chief Information Officer, U.S. Patent and Trademark Office, U.S. Department of Commerce, P.O. Box 1450, Alexandria, VA 22313-1450. DO NOT SEND FEES OR COMPLETED FORMS TO THIS ADDRESS. **SEND TO: Commissioner for Patents, P.O. Box 1450, Alexandria, VA 22313-1450.**
If you need assistance in completing the form, call 1-800-PTO-9199 and select option 2.

UNITED STATES PATENT AND TRADEMARK OFFICE

UNITED STATES DEPARTMENT OF COMMERCE
United States Patent and Trademark Office
Address: COMMISSIONER FOR PATENTS
P.O. Box 1450
Alexandria, Virginia 22313-1450
www.uspto.gov

APPLICATION NO.	FILING DATE	FIRST NAMED INVENTOR	ATTORNEY DOCKET NO.	CONFIRMATION NO.
12/364,823	02/03/2009	James Arthur Proctor JR.	4394.1003-000	4791

21005 7590 12/28/2010
HAMILTON, BROOK, SMITH & REYNOLDS, P.C.
530 VIRGINIA ROAD
P.O. BOX 9133
CONCORD, MA 01742-9133

EXAMINER
HAYLES, ASHFORD S

ART UNIT	PAPER NUMBER
3687	

MAIL DATE	DELIVERY MODE
12/28/2010	PAPER

Please find below and/or attached an Office communication concerning this application or proceeding.

The time period for reply, if any, is set in the attached communication.

PTOL-90A (Rev. 04/07)

Office Action Summary	Application No.	Applicant(s)	
	12/364,823	PROCTOR ET AL.	
	Examiner	Art Unit	
	ASHFORD HAYLES	3687	

-- The MAILING DATE of this communication appears on the cover sheet with the correspondence address --

Period for Reply

A SHORTENED STATUTORY PERIOD FOR REPLY IS SET TO EXPIRE 3 MONTH(S) OR THIRTY (30) DAYS, WHICHEVER IS LONGER, FROM THE MAILING DATE OF THIS COMMUNICATION.

- Extensions of time may be available under the provisions of 37 CFR 1.136(a). In no event, however, may a reply be timely filed after SIX (6) MONTHS from the mailing date of this communication.
- If NO period for reply is specified above, the maximum statutory period will apply and will expire SIX (6) MONTHS from the mailing date of this communication.
- Failure to reply within the set or extended period for reply will, by statute, cause the application to become ABANDONED (35 U.S.C. § 133). Any reply received by the Office later than three months after the mailing date of this communication, even if timely filed, may reduce any earned patent term adjustment. See 37 CFR 1.704(b).

Status

1)☒ Responsive to communication(s) filed on *16 September 2010*.

2a)☒ This action is **FINAL**. 2b)☐ This action is non-final.

3)☐ Since this application is in condition for allowance except for formal matters, prosecution as to the merits is closed in accordance with the practice under *Ex parte Quayle*, 1935 C.D. 11, 453 O.G. 213.

Disposition of Claims

4)☒ Claim(s) *1-20* is/are pending in the application.

4a) Of the above claim(s) _____ is/are withdrawn from consideration.

5)☐ Claim(s) _____ is/are allowed.

6)☒ Claim(s) *1-20* is/are rejected.

7)☐ Claim(s) _____ is/are objected to.

8)☐ Claim(s) _____ are subject to restriction and/or election requirement.

Application Papers

9)☐ The specification is objected to by the Examiner.

10)☒ The drawing(s) filed on *2/3/2009* is/are: a)☒ accepted or b)☐ objected to by the Examiner.

Applicant may not request that any objection to the drawing(s) be held in abeyance. See 37 CFR 1.85(a).

Replacement drawing sheet(s) including the correction is required if the drawing(s) is objected to. See 37 CFR 1.121(d).

11)☐ The oath or declaration is objected to by the Examiner. Note the attached Office Action or form PTO-152.

Priority under 35 U.S.C. § 119

12)☐ Acknowledgment is made of a claim for foreign priority under 35 U.S.C. § 119(a)-(d) or (f).

a)☐ All b)☐ Some * c)☐ None of:

1.☐ Certified copies of the priority documents have been received.

2.☐ Certified copies of the priority documents have been received in Application No. _____.

3.☐ Copies of the certified copies of the priority documents have been received in this National Stage application from the International Bureau (PCT Rule 17.2(a)).

* See the attached detailed Office action for a list of the certified copies not received.

Attachment(s)

1) ☒ Notice of References Cited (PTO-892)

2) ☐ Notice of Draftsperson's Patent Drawing Review (PTO-948)

3) ☒ Information Disclosure Statement(s) (PTO/SB/08) Paper No(s)/Mail Date *9/16/2010*.

4) ☐ Interview Summary (PTO-413) Paper No(s)/Mail Date. _____ .

5) ☐ Notice of Informal Patent Application

6) ☐ Other: _____.

DETAILED ACTION

1. Amendment received on September 16, 2010 has been acknowledged. Claims 15-20 have been added and amendments to 7 and 14 have been entered. Therefore, claims 1-20 are pending.

Election/Restrictions

2. Newly submitted claims 17-20 are directed to an invention that is independent or distinct from the invention originally claimed for the following reasons:

Claims 17-20 are drawn toward a method for searching for device identifiers for other wireless devices in proximity to another wireless device and confirming the identity of a merchant.

Since applicant has received an action on the merits for the originally presented invention, this invention has been constructively elected by original presentation for prosecution on the merits. Accordingly, claims 17-20 are withdrawn from consideration as being directed to a non-elected invention. See 37 CFR 1.142(b) and MPEP § 821.03.

Claim Rejections - 35 USC § 103

3. The following is a quotation of 35 U.S.C. 103(a) which forms the basis for all obviousness rejections set forth in this Office action:

> (a) A patent may not be obtained though the invention is not identically disclosed or described as set forth in section 102 of this title, if the differences between the subject matter sought to be patented and the prior art are such that the subject matter as a whole would have been obvious at the time the invention was made to a person having ordinary skill in the art to which said subject matter pertains. Patentability shall not be negatived by the manner in which the invention was made.

4. **Claims 1-16 are rejected under 35 U.S.C. 103(a) as being unpatentable over Hammad (2009/0271211) in view of Van Bosch et al. (2008/0313079)**.

As per Claims 1 and 8, Hammad discloses a method for operating a first wireless communication device comprising:

receiving an identifier from a second wireless device using a first wireless protocol, the identifier relating to an object or entity associated with the second device (pg.6, ¶ [0057] discusses the customer exclusive data tag and account information such as the account number associated with the issuer 28 may pass from the portable consumer device A 32-1 to the access device 34, where pg.4, ¶ [0049] discusses portable consumer device is capable of transferring and receiving data using a near field communications, where the first wireless device is the access device 34 and the second wireless device is the consumer device 32);

sending the received identifier to the server (pg.6, ¶ [0058] discusses a server computer in the payment processing network 26 can then receive (step 206) and analyze the authorization request message); and

receiving information from the server, the information also associated with the entity or object associated with the second wireless device (pg.4, ¶ [0042] discusses after the issuer receives the authorization request message, the issuer sends an authorization response message back to the payment processing network to indicate whether or not the current transaction is authorized (or not authorized). The payment processing network then forwards the authorization response message back to the acquirer. The acquirer then sends the response message back to the merchant), wherein the information additionally includes a visual identification of the object or

entity associated with the second device (pg.8, ¶ [0083] discusses the customer exclusive data in an authorization request message could be used to hold other account data and preferences for such things as student ID, payment preferences, dorm access information or ID, notification information, age verification and identity).

However, Hammad fails to disclose connecting to a server using a second wireless protocol different from the first wireless protocol and using a second wireless protocol.

Van Bosch teaches connecting to a server using a second wireless protocol different from the first wireless protocol and using a second wireless protocol (pg.2, ¶ [0024] discusses the trusted party 140 is connectable to the wireless communication device 110 and the point of sale terminal 150 via long-range communication through wireless towers 120, 130. The long-range communication is a wired and/or a wireless long-range communication. The long-range communication may adhere to wireless communication protocols as mentioned earlier and where trusted party 140 is a network server of a financial institution).

Therefore it would have been obvious to one of ordinary skill in the art at the time of the invention to include the ability to communicate thru separate wireless protocols as taught by Van Bosch in the system of Hammad, since the claimed invention is merely a combination of old elements, and in the combination each element merely would have performed the same function as it did separately, and one of ordinary skill in the art would have recognized that the results of the combination were predictable.

As per Claims 2 and 9, Hammad discloses the method of claim 1 additionally comprising:

notifying a user of the first wireless device of the proximity of the second wireless device <u>or of the proximity of the object or entity associated with the second device</u> (pg.6, ¶ [0064] discusses a parent could give his card to his child and ask to be notified any time his card is used, anytime a transaction exceeds a predetermined threshold (e.g., $25), or anytime the merchant has a specified characteristic (e.g. a liquor store). Notification flags could be of any type, value, merchant name or type, location, count, etc. The Examiner is construing that the access device of Hammad possess the ability to notify a user of the consumer device the location of a transaction and the location of the user of the second device).

As per Claims 3 and 10, Hammad discloses the method of claim 1. However, Hammad fails to disclose further comprising:

sending a message to the server, the message representing a request to forward a message to the <u>second</u> wireless device.

Van Bosch teaches sending a message to the server, the message representing a request to forward a message to the <u>second</u> wireless device (pg.3, ¶ [0028] discusses the trusted party 140 transmits the superimposed photo image to the wireless communication device 110. The superimposed photo image received by the wireless communication device 110 is then stored in a memory of the wireless communication device 110).

Therefore, it would have been obvious to one of ordinary skill in the art at the time of the invention to utilize the ability to send a message from the server to the wireless device of the consumer as in Van Bosch in the system executing the method of Hammad with the motivation of offering a method for proximity payment transaction between a wireless purchasing device and a point of sale terminal in conjunction with a trusted party (Abstract) as taught by Van Bosch over that of Hammad.

As per Claims 4 and 11, Hammad discloses the method of claim 1 additionally comprising sending a message to the server as part of a relationship brokering function coordinated by the server (pg.5, ¶ [0051] discusses instructions may include instructions for reading a user exclusive data tag or user exclusive data from a consumer device, generating an authorization request message with the user exclusive data tag or the user exclusive data, and sending the authorization request message including the user exclusive data tag or the user exclusive data to a service provider such as an issuer or payment processing network).

As per Claims 5 and 12, Hammad discusses the method of the claimed invention. However, Hammad fails to disclose wherein the server further performs the steps of:

coordinating with an application running at least one of the of the first and second wireless devices, to perform a point of sale transaction utilizing user input received from at least one of the first and second wireless devices;

performing one or more confirmations of steps of the transaction; and

wherein at least one confirmation step additionally comprises:

sending a message to one of the first or second wireless devices to cause the application to display an identifying picture related to one of the devices, prior to completion of the point of sale transaction.

Van Bosch et al. teaches coordinating with an application running at least one of the of the first and second wireless devices (pg.3, ¶ [0029] discusses the communication system 100, the wireless communication device 110 initiates the proximity payment application to perform the proximity payment transaction. The proximity payment transaction process enables the wireless communication device 110 to perform the transaction with the point of sale terminal 150), to perform a point of sale transaction utilizing user input received from at least one of the first and second wireless devices (pg.3, ¶ [0029] discusses the operator operating the point of sale terminal 150 inputs a code placed as the watermark on the superimposed photo image);

performing one or more confirmations of steps of the transaction (pg.3, ¶ [0029] discusses after initiating, the wireless communication device 110 calculates the authentication code of the superimposed photo image. The calculated authentication code is then transmitted to the point of sale terminal 150 via short-range wireless communication. The point of sale terminal 150 receives the authentication code from the wireless communication device 110, where the authentication code is construed as a confirmation step of a transaction); and

wherein at least one confirmation step additionally comprises:

sending a message to one of the first or second wireless devices to cause the application to display an identifying picture related to one of the devices prior to completion of the point of sale transaction(pg.3, ¶ [0029] discusses the operator operating the point of sale terminal 150 inputs a code placed as the watermark on the superimposed photo image. This step is done to ensure that the operator operating the point of sale terminal is forced to look at the photo image with the watermark to verify the user's identity and after receiving, the trusted party 140 verifies the identity of the user based upon the received code and the received authentication code. The trusted party 140 then transmits an approval message to the point of sale terminal 150 for approving the transaction, which occurs before the completion of the transaction).

Therefore, it would have been obvious to one of ordinary skill in the art at the time of the invention to utilize the proximity payment application as in Van Bosch et al. in the system executing the method of Hammad with the motivation of offering proximity payment transaction between a wireless purchasing device and a point of sale terminal in conjunction with a trusted party (Abstract) as taught by Van Bosch et al. over that of Hammad.

As per Claims 6 and 13, Hammad discloses the method of claim 5, wherein both the first and second wireless devices perform at least one transaction confirmation step (pg.7, ¶ [0071] discusses the receipt could be sent from the payment processing

network 26 to a phone (e.g., portable consumer device A 32-1) as a text message or email, where a receipt is construed as a transaction confirmation).

As per Claims 7 and 14, Hammad discloses the method of claim 6 wherein the server further performs one or more of:

authorizing the transaction to a third party (pg.4, ¶ [0041] discusses the payment processing network 26 then forwards the authorization request message to the issuer 28 of the portable consumer device, where issuer 28 is a bank);

interacting with a point of sale application to associate an itemized list of items with <u>the</u> second device (pg.6, ¶ [0071] discusses a receipt is required could be included in the customer exclusive data in an authorization request message which passes from the merchant 22 to the payment processing network 26).

However, Hammad fails to disclose confirming with the application on the second device, thereby requiring user input that the bill of goods list is correct and storing information related to a detected account identity of the second device.

Van Bosch et al. teaches confirming with the application on the second device, thereby requiring user input that the bill of goods list is correct (pg.5, ¶ [0044] discusses a hand written signature may be captured on a smart phone, such as a PDA, using handwriting recognition hardware and software) and storing information related to a detected account identity of the second device (pg.5, ¶ [0044] discusses the signature may be sent to the trusted party 140 via electronic mail, or the trusted party

140 may already have the user's signature in their records and may scan and superimpose the user's signature on the photo image as a second watermark).

Therefore, it would have been obvious to one of ordinary skill in the art at the time of the invention to utilize the signature capture and storing the user's signature as in Van Bosch et al. in the system executing the method of Hammad with the motivation of offering proximity payment transaction between a wireless purchasing device and a point of sale terminal in conjunction with a trusted party (Abstract) as taught by Van Bosch et al. over that of Hammad.

As per Claim 15, Hammad discloses the method of claim 1 wherein the visual identification is an image of the object or entity associated with the second device (pg.8, ¶ [0083] discusses the customer exclusive data in an authorization request message could be used to hold other account data and preferences for such things as student ID, age verification and identity, where the first wireless device is the access device 34 and the second wireless device is the consumer device 32).

As per Claim 16, Hammad discloses the apparatus of claim 8 wherein the visual identification is an image of a person (pg.8, ¶ [0083] discusses the customer exclusive data in an authorization request message could be used to hold other account data and preferences for such things as student ID, where the first wireless device is the access device 34 and the second wireless device is the consumer device 32).

Response to Arguments

5. Applicant's arguments with respect to claims 1 and 8 have been considered but are moot in view of the new ground(s) of rejection.

Conclusion

6. Applicant's amendment necessitated the new ground(s) of rejection presented in this Office action. Accordingly, **THIS ACTION IS MADE FINAL**. See MPEP § 706.07(a). Applicant is reminded of the extension of time policy as set forth in 37 CFR 1.136(a).

A shortened statutory period for reply to this final action is set to expire THREE MONTHS from the mailing date of this action. In the event a first reply is filed within TWO MONTHS of the mailing date of this final action and the advisory action is not mailed until after the end of the THREE-MONTH shortened statutory period, then the shortened statutory period will expire on the date the advisory action is mailed, and any extension fee pursuant to 37 CFR 1.136(a) will be calculated from the mailing date of the advisory action. In no event, however, will the statutory period for reply expire later than SIX MONTHS from the date of this final action.

Any inquiry concerning this communication or earlier communications from the examiner should be directed to ASHFORD HAYLES whose telephone number is (571)270-5106. The examiner can normally be reached on Monday - Friday 8:00 A.M.-5:00 P.M..

If attempts to reach the examiner by telephone are unsuccessful, the examiner's supervisor, Matthew S. Gart can be reached on 571-272-3955. The fax phone number for the organization where this application or proceeding is assigned is 571-273-8300.

Information regarding the status of an application may be obtained from the Patent Application Information Retrieval (PAIR) system. Status information for published applications may be obtained from either Private PAIR or Public PAIR. Status information for unpublished applications is available through Private PAIR only. For more information about the PAIR system, see http://pair-direct.uspto.gov. Should you have questions on access to the Private PAIR system, contact the Electronic Business Center (EBC) at 866-217-9197 (toll-free). If you would like assistance from a USPTO Customer Service Representative or access to the automated information system, call 800-786-9199 (IN USA OR CANADA) or 571-272-1000.

/Elaine Gort/
Primary Examiner, Art Unit 3687

/A. H./
Examiner, Art Unit 3687

Notice of References Cited	Application/Control No. 12/364,823	Applicant(s)/Patent Under Reexamination PROCTOR ET AL.	
	Examiner ASHFORD HAYLES	Art Unit 3687	Page 1 of 1

U.S. PATENT DOCUMENTS

*		Document Number Country Code-Number-Kind Code	Date MM-YYYY	Name	Classification
*	A	US-2007/0255653 A1	11-2007	Tumminaro et al.	705/039
*	B	US-7,379,920 B2	05-2008	Leung et al.	705/67
	C	US-			
	D	US-			
	E	US-			
	F	US-			
	G	US-			
	H	US-			
	I	US-			
	J	US-			
	K	US-			
	L	US-			
	M	US-			

FOREIGN PATENT DOCUMENTS

*		Document Number Country Code-Number-Kind Code	Date MM-YYYY	Country	Name	Classification
	N					
	O					
	P					
	Q					
	R					
	S					
	T					

NON-PATENT DOCUMENTS

*		Include as applicable: Author, Title Date, Publisher, Edition or Volume, Pertinent Pages)
	U	
	V	
	W	
	X	

*A copy of this reference is not being furnished with this Office action. (See MPEP § 707.05(a).)
Dates in MM-YYYY format are publication dates. Classifications may be US or foreign.

Index of Claims	Application/Control No.	Applicant(s)/Patent Under Reexamination
12364823	12364823	PROCTOR ET AL.
	Examiner	**Art Unit**
	ASHFORD HAYLES	3687

✓	Rejected	-	Cancelled	N	Non-Elected	A	Appeal
=	Allowed	÷	Restricted	I	Interference	O	Objected

☐ Claims renumbered in the same order as presented by applicant ☐ CPA ☐ T.D. ☐ R.1.47

CLAIM		DATE								
Final	Original	05/27/2010	12/07/2010							
	1	✓	✓							
	2	✓	✓							
	3	✓	✓							
	4	✓	✓							
	5	✓	✓							
	6	✓	✓							
	7	✓	✓							
	8	✓	✓							
	9	✓	✓							
	10	✓	✓							
	11	✓	✓							
	12	✓	✓							
	13	✓	✓							
	14	✓	✓							
	15		✓							
	16		✓							
	17		✓							
	18		✓							
	19		✓							
	20		✓							

Search Notes	Application/Control No.	Applicant(s)/Patent Under Reexamination
12364823	12364823	PROCTOR ET AL.
	Examiner	**Art Unit**
	ASHFORD HAYLES	3687

SEARCHED			
Class	**Subclass**	**Date**	**Examiner**
705	21	5/27/2010	AH

SEARCH NOTES		
Search Notes	**Date**	**Examiner**
EAST (See Attachments)	5/27/2010	AH
Updated EAST (See Attachments)	12/7/2010	AH

INTERFERENCE SEARCH			
Class	**Subclass**	**Date**	**Examiner**

/A. H./ Examiner.Art Unit 3687	

EAST Search History

EAST Search History (Prior Art)

Ref #	Hits	Search Query	DBs	Default Operator	Plurals	Time Stamp
S1	4652	(payment or transaction) with (user adj input)	US-PGPUB; USPAT; USOCR; FPRS; EPO; JPO; DERWENT; IBM_TDB	OR	ON	2010/05/31 15:05
S2	14	(wireless or contactless) near(payment or transaction) with (user adj input)	US-PGPUB; USPAT; USOCR; FPRS; EPO; JPO; DERWENT; IBM_TDB	OR	ON	2010/05/31 15:05
S3	89	("20020073027" | "20020188565" | "20030045272" | "20040030601" | "20040190468" | "20040264466" | "20060069922" | "20060079284" | "20060085419" | "20070106612" | "20070178886" | "20080010190" | "20080097851" | "20080109741" | "20080114699" | "20080133403" | "20080167961" | "20080181154" | "20080182591" | "20080182592" | "20080189394" | "20080222711" | "20090037286" | "20090177530" | "20090281904" | "20090313105" | "6487601" | "7177594" | "7185204" | "7233960" | "7280847" | "7305245" | "7315944" | "7349871" | "7403762" | "7414988" | "7433649" | "7433694" | "7434723").PN.	US-PGPUB; USPAT; USOCR; FPRS; EPO; JPO; DERWENT; IBM_TDB	OR	ON	2010/05/31 15:12

S4	2	("20080313079").PN.	US-PGPUB; USPAT; USOCR; FPRS; EPO; JPO; DERWENT; IBM_TDB	OR	OFF	2010/05/31 17:19
S5	1003	705/21	US-PGPUB; USPAT; USOCR; FPRS; EPO; JPO; DERWENT; IBM_TDB	OR	ON	2010/05/31 17:29
S6	35	S5 and (wireless or contactless) near (payment or transaction)	US-PGPUB; USPAT; USOCR; FPRS; EPO; JPO; DERWENT; IBM_TDB	OR	ON	2010/05/31 17:29
S7	25	S6 and (photo or image or picture or graphic or still)	US-PGPUB; USPAT; USOCR; FPRS; EPO; JPO; DERWENT; IBM_TDB	OR	ON	2010/05/31 17:29
S8	2	S6 and (photo or image or picture or graphic or still) near (item or product)	US-PGPUB; USPAT; USOCR; FPRS; EPO; JPO; DERWENT; IBM_TDB	OR	ON	2010/05/31 17:30
S9	47	S5 and (wireless or mobile) near (payment or transaction)	US-PGPUB; USPAT; USOCR; FPRS; EPO; JPO; DERWENT; IBM_TDB	OR	ON	2010/05/31 17:30
S10	2	S9 and (photo or image or picture or graphic or still) near (item or product)	US-PGPUB; USPAT; USOCR; FPRS; EPO; JPO; DERWENT; IBM_TDB	OR	ON	2010/05/31 17:30
S11	34	S9 and (photo or image or picture or graphic or still)	US-PGPUB; USPAT; USOCR; FPRS; EPO; JPO; DERWENT; IBM_TDB	OR	ON	2010/05/31 17:30

S12	30	S11 and (list or receipt)	US-PGPUB; USPAT; USOCR; FPRS; EPO; JPO; DERWENT; IBM_TDB	OR	ON	2010/05/31 17:31
S13	30	S12 and (authoriz$5 or confirm$5 or verifi$6)	US-PGPUB; USPAT; USOCR; FPRS; EPO; JPO; DERWENT; IBM_TDB	OR	ON	2010/05/31 17:31
S14	4	S13 and "peer-to-peer"	US-PGPUB; USPAT; USOCR; FPRS; EPO; JPO; DERWENT; IBM_TDB	OR	ON	2010/05/31 17:32
S15	2	S13 and "NFC"	US-PGPUB; USPAT; USOCR; FPRS; EPO; JPO; DERWENT; IBM_TDB	OR	ON	2010/05/31 17:32
S16	0	S13 and visual near ID	US-PGPUB; USPAT; USOCR; FPRS; EPO; JPO; DERWENT; IBM_TDB	OR	ON	2010/05/31 17:33
S17	2	("20090271211").PN.	US-PGPUB; USPAT; USOCR; FPRS; EPO; JPO; DERWENT; IBM_TDB	OR	OFF	2010/06/07 09:31
S18	31	vending adj machine with wireless near (purchase or transaction)	US-PGPUB; USPAT; USOCR; FPRS; EPO; JPO; DERWENT; IBM_TDB	OR	ON	2010/12/07 13:38
S19	0	vending adj machine with wireless near (purchase or transaction) with image	US-PGPUB; USPAT; USOCR; FPRS; EPO; JPO; DERWENT; IBM_TDB	OR	ON	2010/12/07 13:40

S20	1	vending adj machine with wireless near (purchase or transaction) and image	US-PGPUB; USPAT; USOCR; FPRS; EPO; JPO; DERWENT; IBM_TDB	OR	ON	2010/12/07 13:40
S21	23	proximity with wireless near (purchase or transaction)	US-PGPUB; USPAT; USOCR; FPRS; EPO; JPO; DERWENT; IBM_TDB	OR	ON	2010/12/07 13:45
S22	2	"20090271211"	US-PGPUB; USPAT; USOCR; FPRS; EPO; JPO; DERWENT; IBM_TDB	OR	ON	2010/12/07 14:31

EAST Search History (Interference)

<This search history is empty>

12/7/2010 4:31:39 PM
C:\ Documents and Settings\ ahayles\ My Documents\ EAST\ Workspaces\ 12364823.wsp

Substitute for form 1449B/PTO **SUPPLEMENTAL INFORMATION DISCLOSURE STATEMENT IN AN APPLICATION** **LISTING OF REFERENCES** **(September 14, 2010)** (Use several sheets if necessary)	ATTORNEY DOCKET NO. 4394.1003-000		APPLICATION NO. 12/364,823
	FIRST NAMED INVENTOR James Arthur Proctor, Jr.		FILING DATE February 3, 2009
	EXAMINER Hayles, Ashford S.	CONFIRMATION NO. 4791	GROUP 3687

U.S. PATENT DOCUMENTS

Examiner's Initials	Ref. No.	DOCUMENT NUMBER Number-Kind Code (if known)	ISSUE DATE / PUBLICATION DATE MM-DD-YYYY	NAME OF PATENTEE OR APPLICANT OF CITED DOCUMENT
/A.H./	A33	7,714,712	05-11-2010	Emigh, *et al.*
/A.H./	A34	7,330,112	02-12-2008	Emigh, *et al.*

We are not listing separately any prior U.S. Patent Office communications regarding the cited Documents(s) because the Examiner has access to any such actions through PAIR.

EXAMINER	DATE CONSIDERED
/Ashford Hayles/	12/07/2010

SIDS

ALL REFERENCES CONSIDERED EXCEPT WHERE LINED THROUGH. /A.H./

Substitute for form 1449B/PTO **SUPPLEMENTAL INFORMATION DISCLOSURE STATEMENT IN AN APPLICATION** **LISTING OF REFERENCES** **(September 14, 2010)** (Use several sheets if necessary)	ATTORNEY DOCKET NO. 4394.1003-000		APPLICATION NO. 12/364,823
	FIRST NAMED INVENTOR James Arthur Proctor, Jr.		FILING DATE February 3, 2009
	EXAMINER Hayles, Ashford S.	CONFIRMATION NO. 4791	GROUP 3687

Examiner's Initials	Ref. No.	**OTHER DOCUMENTS** *(Including Author, Title, Date, Pertinent Pages, Etc.)*
/A.H./	C1	Office Action from related U.S. Application Number 12/364,819, dated August 26, 2010.
/A.H./	C2	Office Action from related U.S. Application Number 12/364,828, dated May 14, 2010.
/A.H./	C3	Office Action from related U.S. Application Number 12/364,938, dated May 13, 2010.
	C4	
	C5	
	C6	
	C7	
	C8	
	C9	
	C10	
	C11	
	C12	
	C13	
	C14	
	C15	
	C16	
	C17	
	C18	
	C19	
	C20	

EXAMINER	DATE CONSIDERED
/Ashford Hayles/	12/07/2010

SIDS
ALL REFERENCES CONSIDERED EXCEPT WHERE LINED THROUGH. /A.H./

HAMILTON, BROOK, SMITH & REYNOLDS, P.C.

Applicant Initiated Interview Request Form

Application No.: 12/364,823 First Named Applicant: James Arthur Proctor, Jr.

Examiner: Ashford S. Hayles Art Unit: 3687 Status of Application: Final Rejection

Tentative Participants:

(1) David J. Thibodeau, Jr. (2) James Arthur Proctor, Jr.

(3) (4)

Proposed Date of Interview: January 26, 2011 Proposed Time: 2:00 p.m. (AM/PM)

Type of Interview Requested:

(1) ☒ Telephonic (2) ☐ Personal (3) ☐ Video Conference

Exhibit To Be Shown or Demonstrated: ☐ YES ☒ NO

If yes, provide brief description:

Issues To Be Discussed

Issues (Rej., Obj., etc.)	Claims / Fig. #s	Prior Art	Discussed	Agreed	Not Agreed
(1) Rejection		Hammad	☐	☐	☐
(2) Rejection		Van Bosch et al.	☐	☐	☐
(3) Restriction	Claims 17-20		☐	☐	☐
(4)			☐	☐	☐

☐ Continuation Sheet Attached

Brief Description of Arguments to be Presented:

Discuss Hammad and distinguishing claim features.

Discuss Van Bosch et al. and distinguishing claim features.

Discuss scope of restriction requirement in view of claims 2, 5, 12 and 14.

An interview was conducted on the above-identified application on

NOTE: This form should be completed by applicant and submitted to the examiner in advance of the interview (see MPEP § 713.01).
This application will not be delayed from issue because of applicant's failure to submit a written record of this interview. Therefore, applicant is advised to file a statement of the substance of this interview (37 CFR § 1.133(b)) as soon as possible.

Applicant/Applicant's Representative Signature

Examiner/SPE Signature

David J. Thibodeau, Jr.

Typed/Printed Name of Applicant or Representative

31,671

Registration Number, if applicable

RECEIVED
CENTRAL FAX CENTER
JAN 24 2011

HAMILTON BROOK SMITH REYNOLDS
Intellectual Property Law

Hamilton, Brook, Smith & Reynolds, PC
530 Virginia Road PO. Box 9133
Concord, MA 01742-9133

T 978 341.0036
F 978.341.0136
www.hbsr.com

FACSIMILE COVER SHEET

Examiner: Ashford S. Hayles **Group:** 3687

Date: January 24, 2011

Client Code: 4394

Facsimile No.: (571) 273-8300

From: David J. Thibodeau, Jr.

Subject: U.S. Patent Application No.: 12/364,823
Filing Date: February 3, 2009
Title: Visual Identification Information Used As Confirmation In A Wireless Communication
Conf. No.: 4791
Our Docket No.: 4394.1003-000

Number of pages including this cover sheet: 2

Please confirm receipt of facsimile: Yes _X_ No ____

Comments:

Please see attached Interview Request. Please confirm receipt by return facsimile. Thank you.

1054032 1

Privileged and Confidential - All information transmitted hereby is intended only for the use of the addressee(s) named above. If the reader of this message is not the intended recipient or the employee or agent responsible for delivering the message to the intended recipient(s), please note that any distribution or copying of this communication is strictly prohibited. Anyone who received this communication in error is asked to notify us immediately by telephone and to destroy the original message or return it to us at the above address via first class mail.

PAGE 1/2 * RCVD AT 1/24/2011 2:25:59 PM [Eastern Standard Time] * SVR:USPTO-EFXRF-5/43 * DNIS:2738300 * CSID:1978 341 0136 * DURATION (mm-ss):00-58

RECEIVED
CENTRAL FAX CENTER
JAN 25 2011

HAMILTON BROOK SMITH REYNOLDS
Intellectual Property Law

Hamilton, Brook, Smith & Reynolds, PC.
530 Virginia Road PO Box 9133
Concord, MA 01742-9133

T 978 341.0036
F 978 341 0136
www.hbsr.com

UNOFFICIAL DOCUMENT FOR EXAMINER'S REVIEW

FACSIMILE COVER SHEET

Group: 3687

Examiner: Ashford S. Hayles

Date: January 25, 2011

Client Code: 4394

Facsimile No.: (571) 273-8300

From: David J. Thibodeau, Jr.

Subject: Proposed Claim Amendment for Discussion Only

Docket No.: 4394.1003-000

Applicants: James Arthur Proctor, Jr. and James Arthur Proctor, III

Application No.: 12/364,823

Filing Date: February 3, 2009

Title: Visual Identification Information Used As Confirmation In A Wireless Communication

Number of pages including this cover sheet: 7

Please confirm receipt of facsimile: Yes X No _____

Comments:

Please see attached Proposed Claim Amendment. Please confirm receipt by return facsimile.

1054487 1

Privileged and Confidential - All information transmitted hereby is intended only for the use of the addressee(s) named above. If the reader of this message is not the intended recipient or the employee or agent responsible for delivering the message to the intended recipient(s), please note that any distribution or copying of this communication is strictly prohibited. Anyone who received this communication in error is asked to notify us immediately by telephone and to destroy the original message or return it to us at the above address via first class mail.

RECEIVED
CENTRAL FAX CENTER
JAN 25 2011

PATENT APPLICATION
Attorney's Docket No.: 4394.1003-000

DJT/nzk(wlm)
January 25, 2011

UNOFFICIAL COMMUNICATION – FOR DISCUSSION ONLY

PROPOSED CLAIM AMENDMENT

Claim Listing

1. (Currently Amended) A method for operating a first wireless communication device comprising:

receiving an identifier from a second wireless device using a first wireless protocol, the identifier relating to an object or entity associated with the second wireless device;

connecting to a server using a second wireless protocol different from the first wireless protocol;

sending the received identifier to the server; and

receiving information from the server using the second wireless protocol, the information also associated with the entity or object associated with the second wireless device, wherein the information additionally includes a visual identification of the object or entity associated with the second wireless device.

2. (Previously Presented) The method of claim 1 additionally comprising:

notifying a user of the first wireless device of the proximity of the second wireless device or of the proximity of the object or entity associated with the second device.

3. (Previously Presented) The method of claim 1 further comprising:

sending a message to the server, the message representing a request to forward a message to the second wireless device.

4. (Previously Presented) The method of claim 1 additionally comprising

sending a message to the server as part of a relationship brokering function coordinated by the server.

PAGE 2/7 * RCVD AT 1/25/2011 1:24:33 PM [Eastern Standard Time] * SVR:USPTO-EFXRF-5/19 * DNIS:2738300 * CSID:1978 341 0136 * DURATION (mm-ss):02-24

5. (Currently Amended) The method of claim 1 wherein the server further performs the steps of:

coordinating with an application running on [[at least one of the of the first and second wireless devices]] the first wireless device, to perform a point of sale transaction utilizing user input received from [[at least one of the first and second wireless devices]] the first wireless device;

performing one or more [[confirmations of]] steps of the transaction; and

wherein at least one [[confirmation]] such step of the transaction additionally comprises:

providing the visual identification to the first wireless device by sending a message to [[one of the first or second wireless devices]] the first wireless device to cause the application running on the first wireless device to display an identifying picture related to [[one of the devices]] the object or entity associated with the second wireless device, prior to completion of the point of sale transaction.

6. (Currently Amended) The method of claim 5 wherein both the first and second wireless devices perform at least one [[transaction confirmation]] step of the point of sale transaction.

7. (Currently Amended) The method of claim 6 wherein the server further performs one or more of:

authorizing the transaction to a third party;

interacting with a point of sale application on the second wireless device to associate an itemized list of items with the second device;

confirming with the application on the second device, thereby requiring user input that the bill of goods list is correct;

storing information related to a detected account identity of the second device; and/or

storing information relating to inventory in a database.

8. (Currently Amended) A first wireless communication device comprising:

PAGE 3/7 * RCVD AT 1/25/2011 1:24:33 PM [Eastern Standard Time] * SVR:USPTO-EFXRF-5/19 * DNIS:2738300 * CSID:1978 341 0136 * DURATION (mm-ss):02-24

a first receiver, for receiving an identifier from a second wireless device using a first wireless protocol;

a server transmitter, for sending the received identifier to a server using a second wireless protocol; and

a server receiver, for receiving information from the server using the second wireless protocol, the information associated with an entity or object associated with the second wireless device, wherein the further information additionally includes a visual identification of the object or entity associated with the second device.

9. (Previously Presented) The device of claim 8 additionally comprising:

a display, for notifying a user of the first wireless device of the proximity of the second wireless device, or of the proximity of the object or entity.

10. (Original) The device of claim 8 wherein the server transmitter further sends a message to the server representing a request to forward a message to the second wireless device.

11. (Original) The device of claim 8 wherein the server transmitter further sends a message to the server as part of a relationship brokering function coordinated by the server.

12. (Currently Amended) The device of claim 8 wherein the server has a processor configured to:

coordinate with an application running on [[at least one of the of the first and second wireless devices]] <u>the first wireless device</u>, to perform a point of sale transaction utilizing user input received from [[at least one of the first and second wireless devices]] <u>the first wireless device</u>;

perform one [[ore]] <u>or</u> more [[confirmations of]] steps of the transaction; and

a device transmitter, for sending <u>the information to the first wireless device using the second wireless protocol that includes a visual identification by</u> a message to [[one of the first or second wireless devices]] <u>the first wireless device</u> to cause the application <u>running on the first wireless device</u> to display an identifying picture related to [[one of

PAGE 4/7 * RCVD AT 1/25/2011 1:24:33 PM [Eastern Standard Time] * SVR:USPTO-EFXRF-5/19 * DNIS:2738300 * CSID:1978 341 0136 * DURATION (mm-ss):02-24

the devices]] the entity or object associated with the second wireless device, prior to completion of the point of sale transaction.

13. (Currently Amended) The device of claim 12 wherein both the first and second devices perform at least one transaction confirmation step after displaying the identifying picture.

14. (Currently Amended) The device of claim 13 wherein the processor in the server:

authorizes the transaction to a third party;

interacts with a point of sale application to associate an itemized list of items with the second device;

confirms with the application on the second device, thereby requiring user input that the bill of goods list is correct;

stores information related to a detected account identity of the second device; and/or

stores information relating to inventory in a database.

15. (Previously Presented) The method of claim 1 wherein the visual identification is an image of the object or entity associated with the second device.

16. (Previously Presented) The apparatus of claim 8 wherein the visual identification is an image of a person, a merchant, a merchant logo or a vending machine associated with the second wireless device.

17. (Previously Presented) A method for operating a first wireless device associated with a consumer, the method comprising:

searching for device identifiers for other wireless devices in proximity to the first wireless device;

receiving one or more device identifiers from a second wireless device, the device identifiers being received using a first wireless protocol over a first wireless link;

transmitting a request message to a server using a second wireless protocol over a second wireless link, the request message being a request for further information relating to whether one or more merchants are associated with the one or more device identifiers;

receiving a response message from a server indicating that one or more merchant services are available;

displaying information concerning the available merchant services to the user of the first wireless device;

receiving an input from the user indicating that the user has selected a specific merchant to engage in a transaction;

transmitting a request message to a server requesting a transaction with the specific merchant;

receiving a response from a server providing a visual information relating to the identity of the specific merchant, the visual information sufficient for the user to independently determine the identity of the merchant;

displaying the visual information to the user; and

receiving a further input from the user acknowledging that the user has confirmed the identity of the merchant.

18. (Previously Presented) The method of claim 17 wherein the first wireless protocol is either a Bluetooth or wireless local area network protocol.

19. (Previously Presented) The method of claim 17 wherein the second wireless protocol is selected from the group consisting of as GPRS, EDGE, 1xEV-DO, IS-2000, Wi-Max, and LTE.

20. (Previously Presented) The method of claim 17 wherein the further information additionally comprises a picture of the specific merchant and/or other information relating to the particular merchant's business license.

21. (New) The method of claim 1 wherein the further information that includes a visual identification of the object or entity associated with the second wireless device is performed as part of authenticating an identity of an object or entity associated with the second wireless device by a user of the first wireless device.

22. (New) The method of claim 1 additionally comprising:

prior to the step of receiving an identifier from the second wireless device, scanning for identifiers from other wireless devices located in proximity to the first wireless device.

23. (New). The method of claim 1 wherein the step the of receiving the further information that includes a visual identification of the object or entity associated with the second wireless device is performed as part of an initial step in a point of sale transaction.

UNITED STATES PATENT AND TRADEMARK OFFICE

UNITED STATES DEPARTMENT OF COMMERCE
United States Patent and Trademark Office
Address: COMMISSIONER FOR PATENTS
P.O. Box 1450
Alexandria, Virginia 22313-1450
www.uspto.gov

APPLICATION NO.	FILING DATE	FIRST NAMED INVENTOR	ATTORNEY DOCKET NO.	CONFIRMATION NO.
12/364,823	02/03/2009	James Arthur Proctor JR.	4394.1003-000	4791

21005 7590 02/02/2011
HAMILTON, BROOK, SMITH & REYNOLDS, P.C.
530 VIRGINIA ROAD
P.O. BOX 9133
CONCORD, MA 01742-9133

EXAMINER
HAYLES, ASHFORD S

ART UNIT	PAPER NUMBER
3687	

MAIL DATE	DELIVERY MODE
02/02/2011	PAPER

Please find below and/or attached an Office communication concerning this application or proceeding.

The time period for reply, if any, is set in the attached communication.

PTOL-90A (Rev. 04/07)

Interview Summary	Application No.	Applicant(s)	
	12/364,823	PROCTOR ET AL.	
	Examiner	Art Unit	
	ASHFORD HAYLES	3687	

All participants (applicant, applicant's representative, PTO personnel):

(1) *ASHFORD HAYLES*.

(2) *DAVID THIBODEAU*.

(3) *JAMES PROCTOR III*.

(4)_____.

Date of Interview: *26 January 2011*.

Type: a)☒ Telephonic b)☐ Video Conference
c)☐ Personal [copy given to: 1)☐ applicant 2)☐ applicant's representative]

Exhibit shown or demonstration conducted: d)☐ Yes e)☒ No.
If Yes, brief description: _____.

Claim(s) discussed: *1-20*.

Identification of prior art discussed: *n/a*.

Agreement with respect to the claims f)☐ was reached. g)☐ was not reached. h)☒ N/A.

Substance of Interview including description of the general nature of what was agreed to if an agreement was reached, or any other comments: *Discussed reasons for restriction and the differences within the two restricted groups of claims. Discussed novelty of the invention. Suggested that the limitations that are novel to be amended within the independent base claims. Applicant and Attorney plan to submit proposed amendments for review. Additional search will be required*.

(A fuller description, if necessary, and a copy of the amendments which the examiner agreed would render the claims allowable, if available, must be attached. Also, where no copy of the amendments that would render the claims allowable is available, a summary thereof must be attached.)

THE FORMAL WRITTEN REPLY TO THE LAST OFFICE ACTION MUST INCLUDE THE SUBSTANCE OF THE INTERVIEW. (See MPEP Section 713.04). If a reply to the last Office action has already been filed, APPLICANT IS GIVEN A NON-EXTENDABLE PERIOD OF THE LONGER OF ONE MONTH OR THIRTY DAYS FROM THIS INTERVIEW DATE, OR THE MAILING DATE OF THIS INTERVIEW SUMMARY FORM, WHICHEVER IS LATER, TO FILE A STATEMENT OF THE SUBSTANCE OF THE INTERVIEW. See Summary of Record of Interview requirements on reverse side or on attached sheet.

/Elaine Gort/ Primary Examiner, Art Unit 3687	

Summary of Record of Interview Requirements

Manual of Patent Examining Procedure (MPEP), Section 713.04, Substance of Interview Must be Made of Record
A complete written statement as to the substance of any face-to-face, video conference, or telephone interview with regard to an application must be made of record in the application whether or not an agreement with the examiner was reached at the interview.

Title 37 Code of Federal Regulations (CFR) § 1.133 Interviews
Paragraph (b)

In every instance where reconsideration is requested in view of an interview with an examiner, a complete written statement of the reasons presented at the interview as warranting favorable action must be filed by the applicant. An interview does not remove the necessity for reply to Office action as specified in §§ 1.111, 1.135. (35 U.S.C. 132)

37 CFR §1.2 Business to be transacted in writing.
All business with the Patent or Trademark Office should be transacted in writing. The personal attendance of applicants or their attorneys or agents at the Patent and Trademark Office is unnecessary. The action of the Patent and Trademark Office will be based exclusively on the written record in the Office. No attention will be paid to any alleged oral promise, stipulation, or understanding in relation to which there is disagreement or doubt.

The action of the Patent and Trademark Office cannot be based exclusively on the written record in the Office if that record is itself incomplete through the failure to record the substance of interviews.

It is the responsibility of the applicant or the attorney or agent to make the substance of an interview of record in the application file, unless the examiner indicates he or she will do so. It is the examiner's responsibility to see that such a record is made and to correct material inaccuracies which bear directly on the question of patentability.

Examiners must complete an Interview Summary Form for each interview held where a matter of substance has been discussed during the interview by checking the appropriate boxes and filling in the blanks. Discussions regarding only procedural matters, directed solely to restriction requirements for which interview recordation is otherwise provided for in Section 812.01 of the Manual of Patent Examining Procedure, or pointing out typographical errors or unreadable script in Office actions or the like, are excluded from the interview recordation procedures below. Where the substance of an interview is completely recorded in an Examiners Amendment, no separate Interview Summary Record is required.

The Interview Summary Form shall be given an appropriate Paper No., placed in the right hand portion of the file, and listed on the "Contents" section of the file wrapper. In a personal interview, a duplicate of the Form is given to the applicant (or attorney or agent) at the conclusion of the interview. In the case of a telephone or video-conference interview, the copy is mailed to the applicant's correspondence address either with or prior to the next official communication. If additional correspondence from the examiner is not likely before an allowance or if other circumstances dictate, the Form should be mailed promptly after the interview rather than with the next official communication.

The Form provides for recordation of the following information:

- Application Number (Series Code and Serial Number)
- Name of applicant
- Name of examiner
- Date of interview
- Type of interview (telephonic, video-conference, or personal)
- Name of participant(s) (applicant, attorney or agent, examiner, other PTO personnel, etc.)
- An indication whether or not an exhibit was shown or a demonstration conducted
- An identification of the specific prior art discussed
- An indication whether an agreement was reached and if so, a description of the general nature of the agreement (may be by attachment of a copy of amendments or claims agreed as being allowable). Note: Agreement as to allowability is tentative and does not restrict further action by the examiner to the contrary.
- The signature of the examiner who conducted the interview (if Form is not an attachment to a signed Office action)

It is desirable that the examiner orally remind the applicant of his or her obligation to record the substance of the interview of each case. It should be noted, however, that the Interview Summary Form will not normally be considered a complete and proper recordation of the interview unless it includes, or is supplemented by the applicant or the examiner to include, all of the applicable items required below concerning the substance of the interview.

A complete and proper recordation of the substance of any interview should include at least the following applicable items:

1) A brief description of the nature of any exhibit shown or any demonstration conducted,
2) an identification of the claims discussed,
3) an identification of the specific prior art discussed,
4) an identification of the principal proposed amendments of a substantive nature discussed, unless these are already described on the Interview Summary Form completed by the Examiner,
5) a brief identification of the general thrust of the principal arguments presented to the examiner,
   (The identification of arguments need not be lengthy or elaborate. A verbatim or highly detailed description of the arguments is not required. The identification of the arguments is sufficient if the general nature or thrust of the principal arguments made to the examiner can be understood in the context of the application file. Of course, the applicant may desire to emphasize and fully describe those arguments which he or she feels were or might be persuasive to the examiner.)
6) a general indication of any other pertinent matters discussed, and
7) if appropriate, the general results or outcome of the interview unless already described in the Interview Summary Form completed by the examiner.

Examiners are expected to carefully review the applicant's record of the substance of an interview. If the record is not complete and accurate, the examiner will give the applicant an extendable one month time period to correct the record.

Examiner to Check for Accuracy

If the claims are allowable for other reasons of record, the examiner should send a letter setting forth the examiner's version of the statement attributed to him or her. If the record is complete and accurate, the examiner should place the indication, "Interview Record OK" on the paper recording the substance of the interview along with the date and the examiner's initials.

DJT/amg
February 11, 2011

PATENT APPLICATION
Attorney's Docket No.: 4394.1003-000
Expedited Procedure under 37 CFR § 1.116
Examining Group 3687

IN THE UNITED STATES PATENT AND TRADEMARK OFFICE

Applicants:	James Arthur Proctor, Jr. and James Arthur Proctor, III		
Application No.:	12/364,823	Group:	3687
Filed:	February 3, 2009	Examiner:	Hayles, Ashford S.
Confirmation No:	4791		
For:	VISUAL IDENTIFICATION INFORMATION USED AS CONFIRMATION IN A WIRELESS COMMUNICATION		

CERTIFICATE OF MAILING OR TRANSMISSION

I hereby certify that this correspondence is being deposited with the United States Postal Service with sufficient postage as First Class Mail in an envelope addressed to Commissioner for Patents, P.O. Box 1450, Alexandria, VA 22313-1450, or is being facsimile transmitted to the United States Patent and Trademark Office on:

_____ _____
Date Signature

_____
Typed or printed name of person signing certificate

AMENDMENT AFTER FINAL REJECTION UNDER 37 CFR § 1.116

Mail Stop AF
Commissioner for Patents
P.O. Box 1450
Alexandria, VA 22313-1450

Sir:

This Amendment After Final Rejection is being filed in response to the Final Office Action mailed from the U.S. Patent and Trademark Office on December 28, 2010 in the above-identified application. Reconsideration and further examination are requested.

Because this Amendment after Final Rejection (37 C.F.R. § 1.116) is being filed within two months of the mailing date of the Final Office Action, Applicant respectfully requests an Advisory Action under MPEP 706.07(f)(I)(C).

Please amend the application as follows:

1059735.1

Amendments to the Claims

Please cancel Claim 15. Please amend Claims 1-14 and Claim 16. Please add new Claim 21. The Claim Listing below will replace all prior versions of the claims in the application:

Claim Listing

1. (Currently Amended) A method for operating a first wireless ~~communication~~ device, the first wireless device communicating using two different wireless communication protocols, such that a first wireless protocol is used to receive identifiers from other wireless devices, and such that a second wireless protocol, different from the first wireless protocol, is used to communicate with a trusted server to confirm an identity of an object or entity associated with one of the other wireless devices, the method comprising the steps of:

receiving an identifier from a second wireless device using the [[a]] first wireless protocol, the identifier relating to an object or entity associated with the second wireless device;

connecting to a trusted server using [[a]] the second wireless protocol ~~different from the first wireless protocol~~;

sending the received identifier from the first wireless device to the trusted server using the second wireless protocol; [[and]]

receiving visual identification information from the trusted server also using the second wireless protocol, the visual identification information also associated with the entity or object associated with the second wireless device, wherein the visual identification information additionally includes ~~a visual identification~~ at least an identifying picture of the object or entity associated with the second wireless device;

displaying, on the first wireless device, the identifying picture of the object or entity associated with the second wireless device;

receiving user input indicating a user of the first wireless device has compared the identifying picture to the object or entity associated with the second wireless device and the user considering them to match; and

confirming, to the trusted server, verification of the identity of the object or entity associated with the second wireless device.

2. (Currently Amended) The method of claim 1 additionally comprising:

notifying [[a]] the user of the first wireless device of the proximity of the second wireless device or of the proximity of the object or entity associated with the second device.

3. (Currently Amended) The method of claim 1 further comprising, subsequent to, or coincident with, the step of confirming to the trusted server, verification of the identity of the object or entity associated with the second wireless device, the step of:

sending a message to the trusted server, the message representing a request to forward a message to the second wireless device.

4. (Currently Amended) The method of claim 1 additionally comprising, subsequent to, or coincident with, the step of confirming to the trusted server, verification of the identity of the object or entity associated with the second wireless device, the step of:

sending a message to the trusted server as part of a relationship brokering function coordinated by the server.

5. (Currently Amended) The method of claim 1 wherein the trusted server further performs the steps of:

coordinating with an application running on ~~at least one of the of the first and second wireless devices~~ the first wireless device, to perform a point of sale transaction utilizing user input received from ~~at least one of the first and second wireless devices~~ the first wireless device;

performing one or more ~~confirmations of~~ steps of the transaction; and

wherein at least one ~~confirmation~~ such step of the transaction additionally comprises:

~~sending a message to one of the first or second wireless devices to cause the application to display an identifying picture related to one of the devices,~~

prior to completion of the point of sale transaction,

receiving, from the first wireless device, the confirmation of verification of the identity of the object or entity associated with the second wireless device.

6. (Currently Amended) The method of claim 5 wherein both the first and second wireless devices perform at least one ~~transaction confirmation~~ step of the point of sale transaction.

7. (Currently Amended) The method of claim 6 wherein the trusted server further performs one or more of:

authorizing the transaction to a third party;

interacting with a point of sale application on the second wireless device to associate an itemized list of items with the second device;

confirming with the application on the second device, thereby requiring user input that the bill of goods list is correct;

storing information related to a detected account identity of the second device; and/or

storing information relating to inventory in a database.

8. (Currently Amended) A first wireless communication device communicating with two different wireless communication protocols, such that a first wireless protocol is used to receive identifiers from other wireless devices, and such that a second wireless protocol, different from a first wireless protocol, is used to communicate with a trusted server to confirm an identity of an object or entity associated with one of the other wireless devices, the first wireless communication device further comprising:

a first receiver, for receiving an identifier from a second wireless device using [[a]] the first wireless protocol, the identifier relating to an object or entity associated with the second wireless device;

a server transmitter, for sending the received identifier from the first wireless device to [[a]] the trusted server using [[a]] the second wireless protocol; [[and]]

a server receiver, for receiving visual identification information from the trusted server using the second wireless protocol, the visual identification information associated

with [[an]] the entity or object associated with the second wireless device, wherein the further information additionally includes ~~a visual identification~~ at least an identifying picture of the object or entity associated with the second wireless device;

a display, for displaying on the first wireless device the identifying picture of the object or entity associated with the second wireless device;

a user input device, for receiving user input from a user of the first wireless device indicating that the user has compared the identifying picture with the object or entity associated with the second wireless device and considers them to match; and

wherein the server transmitter then confirms, to the trusted server, verification of the identity of the object or entity associated with the second wireless device.

9. (Currently Amended) The device of claim 8 additionally ~~comprising:~~

[[a]] wherein the display~~, for notifying a~~ also displays a notification to the user of the first wireless device of the proximity of the second wireless device, or of the proximity of the object or entity associated with the second wireless device.

10. (Currently Amended) The device of claim 8 wherein the server transmitter further sends a message to the trusted server representing a request to forward a message to the second wireless device.

11. (Currently Amended) The device of claim 8 wherein the server transmitter further sends a message to the trusted server as part of a relationship brokering function coordinated by the server.

12. (Currently Amended) The device of claim 8 wherein the trusted server has a processor configured to:

coordinate with an application running on ~~at least one of the of the first and second wireless devices~~ the first wireless device, to perform a point of sale transaction utilizing user input received from ~~at least one of the first and second wireless devices~~ the first wireless device;

perform one [[ore]] or more ~~confirmations of~~ steps of the transaction; and

~~a device transmitter, for sending a message to one of the first or second wireless devices to cause the application to display an identifying picture related to one of the devices,~~

a device receiver, for receiving prior to completion of the point of sale transaction, the confirmation of verification of the identity of the object or entity associated with the second wireless device.

13. (Currently Amended) The device of claim 12 wherein both the first and second devices perform at least one transaction confirmation step ~~after displaying the identifying picture~~.

14. (Currently Amended) The device of claim 13 wherein the processor in the trusted server:

authorizes the transaction to a third party;

interacts with a point of sale application to associate an itemized list of items with the second device;

confirms with the application on the second device, thereby requiring user input that the bill of goods list is correct;

stores information related to a detected account identity of the second device; and/or

stores information relating to inventory in a database.

15. (Cancelled).

16. (Currently Amended) The ~~apparatus~~ device of claim 8 wherein the ~~visual identification~~ identifying picture is an image of a person, a merchant, a merchant logo or a vending machine associated with the second wireless device.

17. (Withdrawn) A method for operating a first wireless device associated with a consumer, the method comprising:

searching for device identifiers for other wireless devices in proximity to the first wireless device;

receiving one or more device identifiers from a second wireless device, the device identifiers being received using a first wireless protocol over a first wireless link;

transmitting a request message to a server using a second wireless protocol over a second wireless link, the request message being a request for further information relating to whether one or more merchants are associated with the one or more device identifiers; receiving a response message from a server indicating that one or more merchant services are available;

displaying information concerning the available merchant services to the user of the first wireless device;

receiving an input from the user indicating that the user has selected a specific merchant to engage in a transaction;

transmitting a request message to a server requesting a transaction with the specific merchant;

receiving a response from a server providing a visual information relating to the identity of the specific merchant, the visual information sufficient for the user to independently determine the identity of the merchant;

displaying the visual information to the user; and

receiving a further input from the user acknowledging that the user has confirmed the identity of the merchant.

18. (Withdrawn) The method of claim 17 wherein the first wireless protocol is either a Bluetooth or wireless local area network protocol.

19. (Withdrawn) The method of claim 17 wherein the second wireless protocol is selected from the group consisting of as GPRS, EDGE, 1xEV-DO, IS-2000, Wi-Max, and LTE.

20. (Withdrawn) The method of claim 17 wherein the further information additionally comprises a picture of the specific merchant and/or other information relating to the particular merchant's business license.

21. (New) A method for operating a first wireless communication device, the first wireless device communicating using two different wireless communication protocols, such that a first wireless protocol is used to receive identifiers from other wireless devices, and such that a second wireless protocol, different from the first wireless protocol, is used to communicate with a trusted server to confirm an identity of an object or entity associated with one of the other wireless devices, the method comprising the steps of:

scanning for identifiers received from a plurality of other wireless devices using the first wireless protocol, the identifiers relating to an object or entity associated with the other wireless devices;

connecting to a trusted server using the second wireless protocol;

sending a plurality of the received identifiers from the first wireless device to the trusted server using the second wireless protocol;

receiving visual identification information from the trusted server also using the second wireless protocol, the visual identification information also associated with the plurality of entities or objects associated with the other wireless devices, wherein the visual identification information additionally includes at least an identifying picture of the object or entity associated with each of the plurality of other wireless devices;

displaying, on the first wireless device, a plurality of the identifying pictures of the objects or entities associated with the other wireless devices;

receiving user input indicating a user of the first wireless device has compared at least one of the identifying pictures with an object or entity associated with a selected one of the other wireless devices and that they match; and

confirming, to the trusted server, verification of the identity of the object or entity associated with the selected one of the other wireless devices.

REMARKS

Applicants thank Examiner Hayles for the courtesy of a telephone interview on January 26, 2011 with the inventor and a follow-up conversation with the undersigned counsel on January 28, 2011. During those discussions the incorporation of various features from the dependent claims into the independent claims was discussed as a way to overcome the rejections in view of the prior art. The proposed amended claim set presented herein is believed to traverse and/or address all matters raised the current final rejection.

Specifically, it was discussed that the invention is directed to techniques for confirming an identity of an object or entity associated with a second wireless device, and that the confirmation is done by presenting an identifying picture of that object or entity, and then receiving user input indicating comparison of the identifying picture to an object or entity associated with the second wireless device to perform the identity verification.

The foregoing amendments address those concerns, and are believed to be are timely and appropriate, as they are adding features that were previously presented in the dependent claims into the independent claims. Specifically, previous dependent claim 5 had a step that required displaying an identifying picture related to at least one of the first or second wireless devices.

It is understood that claims 17 through 20 are subject to a restriction requirement because of the recitation of "device identifiers" and not particularly because of the recitation of the "searching", "receiving" or "transmitting" steps more generically. Aspects of now withdrawn claims 17-20 directed to allowing or providing for "determining the identity of a merchant" for example are no longer in the case.

With entry of the foregoing amendments to claims 1, 8, and new independent claim 21, it is believed that these claims further distinguish, and are patentable, over the combination of the Hammad and van Bosch prior art.

As discussed with the Examiner, in Hammad (see for example Fig. 1) the "customer exclusive data" is stored on the personal device and forwarded to the issuer (28) or the merchant access device (34). Even if the customer exclusive data could be considered to include a photographic image of the user (and that is not necessarily the case in Hammad) the image is

moving from the personal device to the network. In the claimed invention, the image of the entity or object is flowing from the trusted server to the wireless device.

In van Bosch, a photo image originates at the user wireless device 110 and in an initial provisioning step (Paragraph 61), is forwarded to a trusted party 14 (step 540 of FIG. 5). The trusted party then modifies the photo image by superimposing an authentication code to the image in step 650 of FIG. 6, and stores the authentication code in step 670. When the trusted party 140 adds the code, the modified image is sent back down to the same wireless device 110. The wireless device, also during the provisioning process, stores the superimposed image (paragraph 65), in the same wireless device 110, for later use in proximity transactions (step 560, and paragraph 65).

The steps of processing the image from the user device are further described in Fig. 6, and paragraphs 66 and 67. But there is no notion in Van Bosch of the trusted party 14 providing the image to any device other than the same wireless device 110, and in that case, only in the initial provisioning step. There is no notion of the trusted party (14) providing the image to the point of sale (POS) terminal 150 as part of an identity confirmation process. In contrast, as described in paragraphs 70 and 71 of Van Bosch, the wireless device may display the image on the user's device (110) for the operator of the POS terminal to observe, or the wireless device may transfer the superimposed image to the POS terminal 150. But these steps do not involve the trusted party 14 to distribute the image to the POS terminal.

Also there is no notion or suggestion that when that image is forwarded to the POS terminal there is any input indicating matching of the image against an object or an entity associated with a second wireless device -- only the entering of a code.

Further, there is no notion or suggestion that the image may be provided by the trusted party to the POS terminal (150) in response to connecting to the trusted party 14, or in response to the POS terminal sending an identifier to the trusted party, using a different wireless protocol for sending the response than the protocol that was used for receiving the identifier from the wireless device 110 – all being features of Applicants' claims.

CONCLUSION

In view of the above amendments and remarks, it is believed that all claims are in condition for allowance, and it is respectfully requested that the application be passed to issue. If the Examiner feels that a telephone conference would expedite prosecution of this case, the Examiner is invited to call the undersigned.

Respectfully submitted,

HAMILTON, BROOK, SMITH & REYNOLDS, P.C.

By /David J. Thibodeau Jr. Reg. No. 31671/
David J. Thibodeau, Jr.
Registration No. 31,671
Telephone: (978) 341-0036
Facsimile: (978) 341-0136

Concord, MA 01742-9133
Date: February 11, 2011

DJT/nzk
February 11, 2011

PATENT APPLICATION
DOCKET NO. 4394.1003-000
Expedited Procedure under 37 C.F.R. 1.116
Examining Group 3687

IN THE UNITED STATES PATENT AND TRADEMARK OFFICE

Applicant: James Arthur Proctor, Jr. and James Arthur Proctor, III

Application No.: 12/364,823 Group: 3687

Filed: February 3, 2009 Examiner: Hayles, Ashford S.

Confirmation No.: 4791

For: Visual Identification Information Used As Confirmation In A Wireless Communication

CERTIFICATE OF MAILING OR TRANSMISSION

I hereby certify that this correspondence is being deposited with the United States Postal Service with sufficient postage as First Class Mail in an envelope addressed to Commissioner for Patents, P.O. Box 1450, Alexandria, VA 22313-1450, or is being facsimile transmitted to the United States Patent and Trademark Office on:

_____ _____
Date Signature

_____
Typed or printed name of person signing certificate

Mail Stop AF
Commissioner for Patents
P.O. Box 1450
Alexandria, VA 22313-1450

Sir:

Transmitted herewith is an Amendment After Final Rejection under 37 CFR §1.116 for filing in the above-identified application.

☒ Small entity status of this application under 37 CFR 1.9 and 1.27 has been established by a Small Entity Statement previously submitted.

☐ A Small Entity Statement to establish small entity status under 37 CFR 1.9 and 1.27 is enclosed.

1059779.1

The claims fee has been calculated as shown below:

	CLAIMS REMAINING AFTER AMENDMENT		HIGHEST NO. PREVIOUSLY PAID FOR	PRESENT EXTRA	SMALL ENTITY RATE	SMALL ENTITY ADDIT. FEE	OR	OTHER THAN SMALL ENTITY RATE	OTHER THAN SMALL ENTITY ADDIT. FEE
TOTAL	20	MINUS	* 20	0	X $ 26	$		X $52	$
INDEP	4	MINUS	** 3	1	X $110	$ 110		X $220	$
☐ FIRST PRESENTATION OF MULTIPLE DEP. CLAIM					+ $195	$		+ $390	$
					TOTAL =	$ 110		TOTAL =	$ 0

* not fewer than 20
** not fewer than 3

The Application Size Fee has been calculated as shown below:
(Effective for cases filed on or after December 8, 2004)

Actual Sheets (Including current amendment)	Highest No. of Sheets Paid For (At least 100)	No. of Additional Units Required (Increments of 50 sheets)	SMALL ENTITY Rate	SMALL ENTITY Total Amount Owed	OTHER THAN SMALL ENTITY Rate	OTHER THAN SMALL ENTITY Total Amount Owed	Payment Sufficient for up to
63	110	0	X $135	$[ ]	X $270	$[ ]	100 Sheets

Petition for Extension of Time

☐ Applicant hereby petitions to extend the time to respond to the [ ] dated [ ] for [ ] month(s) from [ ] to [ ]. The appropriate fee is set forth below.

☐ *[For action-specific language in an extension of time, select the appropriate option from the Firm Templates]*

Please charge Deposit Account No. 08-0380 for the following fees:

☐	Petition for [ ] month Extension of Time	$	
☒	Claims Fee	$	110
☐	Application Size Fee	$	
☐	Other Fees:		
		$	
		$	
	TOTAL:	$	110

A check is enclosed in payment of the following fees:

☐	Petition for [ ] month Extension of Time	$	
☐	Claims Fee	$	
☐	Application Size Fee	$	
☐	Other Fees:		
		$	
		$	
	TOTAL:	$	

☒ Please charge any deficiency or credit any overpayment in the fees that may be due in this matter to Deposit Account No. 08-0380.

Respectfully submitted,

HAMILTON, BROOK, SMITH & REYNOLDS, P.C.

By /David J. Thibodeau Jr. Reg. No. 31671/

David J. Thibodeau, Jr.
Registration No.: 31,671
Telephone (978) 341-0036
Facsimile (978) 341-0136

Concord, Massachusetts 01742-9133
Dated: February 11, 2011

1059779.1

Electronic Patent Application Fee Transmittal

Application Number:	12364823
Filing Date:	03-Feb-2009
Title of Invention:	VISUAL IDENTIFICATION INFORMATION USED AS CONFIRMATION IN A WIRELESS COMMUNICATION
First Named Inventor/Applicant Name:	James Arthur Proctor
Filer:	David J. Thibodeau/ann giso
Attorney Docket Number:	4394.1003-000

Filed as Small Entity

Utility under 35 USC 111(a) Filing Fees

Description	Fee Code	Quantity	Amount	Sub-Total in USD($)
Basic Filing:				
Pages:				
Claims:				
Independent claims in excess of 3	2201	1	110	110
Miscellaneous-Filing:				
Petition:				
Patent-Appeals-and-Interference:				
Post-Allowance-and-Post-Issuance:				
Extension-of-Time:				

Description	Fee Code	Quantity	Amount	Sub-Total in USD($)
Miscellaneous:				
			Total in USD ($)	**110**

Electronic Acknowledgement Receipt

EFS ID:	9424677
Application Number:	12364823
International Application Number:	
Confirmation Number:	4791
Title of Invention:	VISUAL IDENTIFICATION INFORMATION USED AS CONFIRMATION IN A WIRELESS COMMUNICATION
First Named Inventor/Applicant Name:	James Arthur Proctor
Customer Number:	21005
Filer:	David J. Thibodeau/ann giso
Filer Authorized By:	David J. Thibodeau
Attorney Docket Number:	4394.1003-000
Receipt Date:	11-FEB-2011
Filing Date:	03-FEB-2009
Time Stamp:	12:21:44
Application Type:	Utility under 35 USC 111(a)

Payment information:

Submitted with Payment	yes
Payment Type	Deposit Account
Payment was successfully received in RAM	$110
RAM confirmation Number	12914
Deposit Account	080380
Authorized User	
The Director of the USPTO is hereby authorized to charge indicated fees and credit any overpayment as follows:	
Charge any Additional Fees required under 37 C.F.R. Section 1.21 (Miscellaneous fees and charges)	

File Listing:

Document Number	Document Description	File Name	File Size(Bytes)/ Message Digest	Multi Part /.zip	Pages (if appl.)
1		43941003000AAF.pdf	86367 84cd81a2de0f2c1afd7c1a4d59b0ec3af4741fd4	yes	11

Multipart Description/PDF files in .zip description		
Document Description	**Start**	**End**
Amendment After Final	1	1
Claims	2	8
Applicant Arguments/Remarks Made in an Amendment	9	11

Warnings:

Information:

2	Miscellaneous Incoming Letter	43941003000TransmittalofAAF.pdf	102517 06cc92df01c44582530ea7b042c97ef678a5d81b	no	3

Warnings:

Information:

3	Fee Worksheet (PTO-875)	fee-info.pdf	30358 4e35868cbeb0a15c8bf6f49f04ba5af15489198b	no	2

Warnings:

Information:

Total Files Size (in bytes):	219242

This Acknowledgement Receipt evidences receipt on the noted date by the USPTO of the indicated documents, characterized by the applicant, and including page counts, where applicable. It serves as evidence of receipt similar to a Post Card, as described in MPEP 503.

New Applications Under 35 U.S.C. 111
If a new application is being filed and the application includes the necessary components for a filing date (see 37 CFR 1.53(b)-(d) and MPEP 506), a Filing Receipt (37 CFR 1.54) will be issued in due course and the date shown on this Acknowledgement Receipt will establish the filing date of the application.

National Stage of an International Application under 35 U.S.C. 371
If a timely submission to enter the national stage of an international application is compliant with the conditions of 35 U.S.C. 371 and other applicable requirements a Form PCT/DO/EO/903 indicating acceptance of the application as a national stage submission under 35 U.S.C. 371 will be issued in addition to the Filing Receipt, in due course.

New International Application Filed with the USPTO as a Receiving Office
If a new international application is being filed and the international application includes the necessary components for an international filing date (see PCT Article 11 and MPEP 1810), a Notification of the International Application Number and of the International Filing Date (Form PCT/RO/105) will be issued in due course, subject to prescriptions concerning national security, and the date shown on this Acknowledgement Receipt will establish the international filing date of the application.

PTO/SB/06 (07-06)
Approved for use through 1/31/2007. OMB 0651-0032
U.S. Patent and Trademark Office; U.S. DEPARTMENT OF COMMERCE
Under the Paperwork Reduction Act of 1995, no persons are required to respond to a collection of information unless it displays a valid OMB control number.

PATENT APPLICATION FEE DETERMINATION RECORD

Substitute for Form PTO-875

Application or Docket Number	Filing Date	
12/364,823	02/03/2009	☐ To be Mailed

APPLICATION AS FILED – PART I

FOR	(Column 1) NUMBER FILED	(Column 2) NUMBER EXTRA	SMALL ENTITY ☒ RATE ($)	SMALL ENTITY FEE ($)	OR	OTHER THAN SMALL ENTITY RATE ($)	OTHER THAN SMALL ENTITY FEE ($)
☐ BASIC FEE (37 CFR 1.16(a), (b), or (c))	N/A	N/A	N/A			N/A	
☐ SEARCH FEE (37 CFR 1.16(k), (i), or (m))	N/A	N/A	N/A			N/A	
☐ EXAMINATION FEE (37 CFR 1.16(o), (p), or (q))	N/A	N/A	N/A			N/A	
TOTAL CLAIMS (37 CFR 1.16(i))	minus 20 =	*	X $ =		OR	X $ =	
INDEPENDENT CLAIMS (37 CFR 1.16(h))	minus 3 =	*	X $ =			X $ =	
☐ APPLICATION SIZE FEE (37 CFR 1.16(s))	If the specification and drawings exceed 100 sheets of paper, the application size fee due is $250 ($125 for small entity) for each additional 50 sheets or fraction thereof. See 35 U.S.C. 41(a)(1)(G) and 37 CFR 1.16(s).						
☐ MULTIPLE DEPENDENT CLAIM PRESENT (37 CFR 1.16(j))							
* If the difference in column 1 is less than zero, enter "0" in column 2.			TOTAL			TOTAL	

APPLICATION AS AMENDED – PART II

AMENDMENT 02/11/2011

	(Column 1) CLAIMS REMAINING AFTER AMENDMENT		(Column 2) HIGHEST NUMBER PREVIOUSLY PAID FOR	(Column 3) PRESENT EXTRA	SMALL ENTITY RATE ($)	SMALL ENTITY ADDITIONAL FEE ($)	OR	OTHER THAN SMALL ENTITY RATE ($)	OTHER THAN SMALL ENTITY ADDITIONAL FEE ($)
Total (37 CFR 1.16(i))	* 20	Minus	** 20	= 0	X $26 =	0	OR	X $ =	
Independent (37 CFR 1.16(h))	* 4	Minus	***3	= 1	X $110 =	110	OR	X $ =	
☐ Application Size Fee (37 CFR 1.16(s))									
☐ FIRST PRESENTATION OF MULTIPLE DEPENDENT CLAIM (37 CFR 1.16(j))							OR		
					TOTAL ADD'L FEE	110	OR	TOTAL ADD'L FEE	

AMENDMENT

	(Column 1) CLAIMS REMAINING AFTER AMENDMENT		(Column 2) HIGHEST NUMBER PREVIOUSLY PAID FOR	(Column 3) PRESENT EXTRA	RATE ($)	ADDITIONAL FEE ($)	OR	RATE ($)	ADDITIONAL FEE ($)
Total (37 CFR 1.16(i))	*	Minus	**	=	X $ =		OR	X $ =	
Independent (37 CFR 1.16(h))	*	Minus	***	=	X $ =		OR	X $ =	
☐ Application Size Fee (37 CFR 1.16(s))									
☐ FIRST PRESENTATION OF MULTIPLE DEPENDENT CLAIM (37 CFR 1.16(j))							OR		
					TOTAL ADD'L FEE		OR	TOTAL ADD'L FEE	

* If the entry in column 1 is less than the entry in column 2, write "0" in column 3.
** If the "Highest Number Previously Paid For" IN THIS SPACE is less than 20, enter "20".
*** If the "Highest Number Previously Paid For" IN THIS SPACE is less than 3, enter "3".
The "Highest Number Previously Paid For" (Total or Independent) is the highest number found in the appropriate box in column 1.

Legal Instrument Examiner:
/SHANDA ROSS/

This collection of information is required by 37 CFR 1.16. The information is required to obtain or retain a benefit by the public which is to file (and by the USPTO to process) an application. Confidentiality is governed by 35 U.S.C. 122 and 37 CFR 1.14. This collection is estimated to take 12 minutes to complete, including gathering, preparing, and submitting the completed application form to the USPTO. Time will vary depending upon the individual case. Any comments on the amount of time you require to complete this form and/or suggestions for reducing this burden, should be sent to the Chief Information Officer, U.S. Patent and Trademark Office, U.S. Department of Commerce, P.O. Box 1450, Alexandria, VA 22313-1450. DO NOT SEND FEES OR COMPLETED FORMS TO THIS ADDRESS. **SEND TO: Commissioner for Patents, P.O. Box 1450, Alexandria, VA 22313-1450.**
If you need assistance in completing the form, call 1-800-PTO-9199 and select option 2.

UNITED STATES PATENT AND TRADEMARK OFFICE

UNITED STATES DEPARTMENT OF COMMERCE
United States Patent and Trademark Office
Address: COMMISSIONER FOR PATENTS
P.O. Box 1450
Alexandria, Virginia 22313-1450
www.uspto.gov

APPLICATION NO.	FILING DATE	FIRST NAMED INVENTOR	ATTORNEY DOCKET NO.	CONFIRMATION NO.
12/364,823	02/03/2009	James Arthur Proctor JR.	4394.1003-000	4791

21005 7590 02/25/2011
HAMILTON, BROOK, SMITH & REYNOLDS, P.C.
530 VIRGINIA ROAD
P.O. BOX 9133
CONCORD, MA 01742-9133

EXAMINER
HAYLES, ASHFORD S

ART UNIT	PAPER NUMBER
3687	

MAIL DATE	DELIVERY MODE
02/25/2011	PAPER

Please find below and/or attached an Office communication concerning this application or proceeding.

The time period for reply, if any, is set in the attached communication.

PTOL-90A (Rev. 04/07)

Advisory Action Before the Filing of an Appeal Brief	**Application No.** 12/364,823	**Applicant(s)** PROCTOR ET AL.	
	Examiner ASHFORD HAYLES	**Art Unit** 3687	

--The MAILING DATE of this communication appears on the cover sheet with the correspondence address --

THE REPLY FILED 11 February 2011 FAILS TO PLACE THIS APPLICATION IN CONDITION FOR ALLOWANCE.

1. ☒ The reply was filed after a final rejection, but prior to or on the same day as filing a Notice of Appeal. To avoid abandonment of this application, applicant must timely file one of the following replies: (1) an amendment, affidavit, or other evidence, which places the application in condition for allowance; (2) a Notice of Appeal (with appeal fee) in compliance with 37 CFR 41.31; or (3) a Request for Continued Examination (RCE) in compliance with 37 CFR 1.114. The reply must be filed within one of the following time periods:
   a) ☐ The period for reply expires _____months from the mailing date of the final rejection.
   b) ☒ The period for reply expires on: (1) the mailing date of this Advisory Action, or (2) the date set forth in the final rejection, whichever is later. In no event, however, will the statutory period for reply expire later than SIX MONTHS from the mailing date of the final rejection.
   Examiner Note: If box 1 is checked, check either box (a) or (b). ONLY CHECK BOX (b) WHEN THE FIRST REPLY WAS FILED WITHIN TWO MONTHS OF THE FINAL REJECTION. See MPEP 706.07(f).

Extensions of time may be obtained under 37 CFR 1.136(a). The date on which the petition under 37 CFR 1.136(a) and the appropriate extension fee have been filed is the date for purposes of determining the period of extension and the corresponding amount of the fee. The appropriate extension fee under 37 CFR 1.17(a) is calculated from: (1) the expiration date of the shortened statutory period for reply originally set in the final Office action; or (2) as set forth in (b) above, if checked. Any reply received by the Office later than three months after the mailing date of the final rejection, even if timely filed, may reduce any earned patent term adjustment. See 37 CFR 1.704(b).

NOTICE OF APPEAL

2. ☐ The Notice of Appeal was filed on _____. A brief in compliance with 37 CFR 41.37 must be filed within two months of the date of filing the Notice of Appeal (37 CFR 41.37(a)), or any extension thereof (37 CFR 41.37(e)), to avoid dismissal of the appeal. Since a Notice of Appeal has been filed, any reply must be filed within the time period set forth in 37 CFR 41.37(a).

AMENDMENTS

3. ☒ The proposed amendment(s) filed after a final rejection, but prior to the date of filing a brief, will not be entered because
   (a) ☒ They raise new issues that would require further consideration and/or search (see NOTE below);
   (b) ☐ They raise the issue of new matter (see NOTE below);
   (c) ☐ They are not deemed to place the application in better form for appeal by materially reducing or simplifying the issues for appeal; and/or
   (d) ☐ They present additional claims without canceling a corresponding number of finally rejected claims.
   NOTE: _____. (See 37 CFR 1.116 and 41.33(a)).
4. ☐ The amendments are not in compliance with 37 CFR 1.121. See attached Notice of Non-Compliant Amendment (PTOL-324).
5. ☐ Applicant's reply has overcome the following rejection(s): _____.
6. ☐ Newly proposed or amended claim(s) _____ would be allowable if submitted in a separate, timely filed amendment canceling the non-allowable claim(s).
7. ☐ For purposes of appeal, the proposed amendment(s): a) ☐ will not be entered, or b) ☐ will be entered and an explanation of how the new or amended claims would be rejected is provided below or appended.
   The status of the claim(s) is (or will be) as follows:
   Claim(s) allowed: _____.
   Claim(s) objected to: _____.
   Claim(s) rejected: _____.
   Claim(s) withdrawn from consideration: _____.

AFFIDAVIT OR OTHER EVIDENCE

8. ☐ The affidavit or other evidence filed after a final action, but before or on the date of filing a Notice of Appeal will not be entered because applicant failed to provide a showing of good and sufficient reasons why the affidavit or other evidence is necessary and was not earlier presented. See 37 CFR 1.116(e).
9. ☐ The affidavit or other evidence filed after the date of filing a Notice of Appeal, but prior to the date of filing a brief, will not be entered because the affidavit or other evidence failed to overcome all rejections under appeal and/or appellant fails to provide a showing a good and sufficient reasons why it is necessary and was not earlier presented. See 37 CFR 41.33(d)(1).
10. ☐ The affidavit or other evidence is entered. An explanation of the status of the claims after entry is below or attached.

REQUEST FOR RECONSIDERATION/OTHER

11. ☒ The request for reconsideration has been considered but does NOT place the application in condition for allowance because: Amendments to the claims as well as newly added claims has limitations that will require additional search.
12. ☐ Note the attached Information *Disclosure Statement*(s). (PTO/SB/08) Paper No(s). _____
13. ☐ Other: _____.

/Elaine Gort/
Primary Examiner, Art Unit 3687

DJT/amg
March 23, 2011

PATENT APPLICATION
Attorney's Docket No.: 4394.1003-000

IN THE UNITED STATES PATENT AND TRADEMARK OFFICE

Applicants: James Arthur Proctor, Jr. and James Arthur Proctor, III

Application No.: 12/364,823 Group: 3687

Filed: February 3, 2009 Examiner: Hayles, Ashford S.

For: VISUAL IDENTIFICATION INFORMATION USED AS CONFIRMATION IN A WIRELESS COMMUNICATION

PETITION TO MAKE SPECIAL UNDER 37 C.F.R. § 1.102(c)(1)

Special Program Examiner
Group 2600
Commissioner for Patents
P.O. Box 1450
Alexandria, VA 22313-1450

Sir:

Applicant, James Arthur Proctor, III, hereby petitions to make this application special as permitted under 37 C.F.R. § 1.102(c)(1). The grounds and conditions for granting this application special status are found in M.P.E.P. § 708.02 (IV), entitled "Applicant's Age".

James Arthur Proctor, III, one of the applicants of record for this application, is over 65 years of age.

The undersigned has evidence showing that Mr. Proctor is over 65 years of age.

It is respectfully requested that this Petition to Make Special be granted.

Respectfully submitted,

HAMILTON, BROOK, SMITH & REYNOLDS, P.C.

By /David J. Thibodeau Jr. Reg. No 31671/
David J. Thibodeau, Jr.
Registration No. 31,671
Telephone: (978) 341-0036
Facsimile: (978) 341-0136

Concord, MA 01742-9133

Date: March 23, 2011

1072934.1

HAMILTON, BROOK, SMITH & REYNOLDS, P.C.

REQUEST FOR CONTINUED EXAMINATION (RCE) TRANSMITTAL

Subsection (b) of 35 U.S.C. § 132, effective on May 29, 2000, provides for continued examination of a utility or plant application filed on or after June 8, 1995. See The American Inventors Protection Act of 1999 (AIPA)

Application Number	12/364,823
Filing Date	February 3, 2009
Confirmation Number	4791
First Named Inventor	James A. Proctor, Jr.
Group Art Unit	3687
Examiner Name	Hayles, Ashford S.
Attorney Docket Number	4394.1003-000

This is a Request for Continued Examination (RCE) under 37 CFR § 1.114 of the above-identified application.
Request for Continued Examination (RCE) practice under 37 CFR 1.114 does not apply to any utility or plant application filed prior to June 8, 1995, or to any design application. See instruction Sheet for RCEs (not to be submitted to the USPTO) on page 2.

1. Submission required under 37 CFR § 1.114

Note: If the RCE is proper, any previously filed unentered amendments and amendments enclosed with the RCE will be entered in the order in which they were filed unless applicant instructs otherwise. If applicant does not wish to have any previously filed unentered amendment(s) entered, applicant must request non-entry of such amendment(s).

a. ☐ Previously submitted
   - i. ☐ Consider the amendment(s)/reply under 37 CFR § 1.116 previously filed on [ ]. (Any unentered amendment(s) referred to above will be entered).
   - ii ☐ Consider the arguments in the Appeal Brief or Reply Brief previously filed on [ ].
   - iii. ☐ Other - - [ ]

b. ☐ Please do not enter the amendment(s)/reply under 37 CFR § 1.116 previously filed on [ ]

c. ☒ Enclosed
   - i. ☒ Preliminary Amendment filed with Request for Continued Examination, with Amendment Fee Transmittal
   - ii. ☐ Affidavit(s)/Declaration(s)
   - iii. ☐ Information Disclosure Statement (IDS)
   - iv. ☐ Petition for Extension of Time - [ ] month(s) - [separate sheet] [included in amend. fee trans.]
   - v. ☒ Other - Petition to Make Special Under 37 C.F.R. § 1.102(c)(1)

2. Miscellaneous

a. ☐ Suspension of action on the above-identified application is requested under 37 CFR § 1.103(c) for a period of [ ] months. (Period of suspension shall not exceed 3 months; Fee under 37 CFR § 1.17(i) **required**)

b. ☐ Other - - [ ]

3. Fees The RCE fee under 37 CFR § 1.17(e) is required by 37 CFR § 1.114 when the RCE is filed.

a. ☐ A check is enclosed for the fees indicated in b. in the total amount of $[ ]

OR

☒ Authorization is granted to charge the fees indicated in b. in the total amount of $743 to Deposit Account No. 08-0380.

b.
   - i. ☒ RCE fee required under 37 CFR § 1.17(e)
   - ii. ☐ Extension of time fee (37 CFR §§ 1.136 and 1.17)
   - iii. ☒ Amendment Fee
   - iv. ☐ Other - - [ ]

c. ☒ Authorization is hereby granted to charge any deficiency in fees or credit any overpayments to Deposit Account No. 08-0380.

SIGNATURE OF APPLICANT, ATTORNEY OR AGENT REQUIRED

Signature	/David J. Thibodeau Jr. Reg No 31671/	Registration No. (Attorney/Agent)	31,671
Name (Print/Type)	David J. Thibodeau, Jr.	Date	March 23, 2011

CERTIFICATE OF MAILING OR TRANSMISSION

I hereby certify that this correspondence is being deposited with the U.S. Postal Service with sufficient postage as first class mail in an envelope addressed: Mail Stop RCE, Commissioner for Patents, P.O. Box 1450, Alexandria, VA 22313-1450, or facsimile transmitted to the US Patent & Trademark Office on the date shown below:

Signature			
Name (Print/Type)		Date	

1067933.1

DJT/amg
March 23, 2011

PATENT APPLICATION
Attorney's Docket No.: 4394.1003-000

IN THE UNITED STATES PATENT AND TRADEMARK OFFICE

Applicants:	James Arthur Proctor, Jr. and James Arthur Proctor, III		
Application No.:	12/364,823	Group:	3687
Filed:	February 3, 2009	Examiner:	Hayles, Ashford S.
Confirmation No:	4791		
For:	VISUAL IDENTIFICATION INFORMATION USED AS CONFIRMATION IN A WIRELESS COMMUNICATION		

CERTIFICATE OF MAILING OR TRANSMISSION

I hereby certify that this correspondence is being deposited with the United States Postal Service with sufficient postage as First Class Mail in an envelope addressed to Commissioner for Patents, P.O. Box 1450, Alexandria, VA 22313-1450, or is being facsimile transmitted to the United States Patent and Trademark Office on:

_____ _____
Date Signature

_____
Typed or printed name of person signing certificate

PRELIMINARY AMENDMENT FILED WITH REQUEST FOR CONTINUED EXAMINATION

Mail Stop RCE
Commissioner for Patents
P.O. Box 1450
Alexandria, VA 22313-1450

Sir:

This Amendment is being filed in response to the Final Office Action mailed from the U.S. Patent and Trademark Office on December 28, 2010 in the above-identified application. In lieu of filing a Notice of Appeal, Applicants' Attorney is also filing a Request for Continued Examination concurrently herewith. Reconsideration and further examination are requested.

Please amend the application as follows:

1072543.1

Amendments to the Claims

Please cancel Claim 15. Please amend Claims 1-14 and Claim 16. Please add new Claims 21 - 34. The Claim Listing below will replace all prior versions of the claims in the application:

Claim Listing

1. (Currently Amended) A method for operating a first wireless ~~communication~~ device, the first wireless device communicating using two different wireless communication protocols, such that a first wireless protocol is used to receive identifiers from other wireless devices, and such that a second wireless protocol, different from the first wireless protocol, is used to communicate with a trusted server to confirm an identity of an object or entity associated with one of the other wireless devices, the method comprising the steps of:

receiving an identifier from a second wireless device using the [[a]] first wireless protocol, the identifier relating to an object or entity associated with the second wireless device;

connecting to [[a]] the trusted server using [[a]] the second wireless protocol ~~different from the first wireless protocol~~;

sending the received identifier from the first wireless device to the trusted server using the second wireless protocol; [[and]]

receiving visual identification information from the trusted server also using the second wireless protocol, the visual identification information also associated with the entity or object associated with the second wireless device, wherein the visual identification information additionally includes ~~a visual identification~~ at least an identifying picture of the object or entity associated with the second wireless device;

displaying, on the first wireless device, the identifying picture of the object or entity associated with the second wireless device;

receiving user input indicating a user of the first wireless device has compared the identifying picture to the object or entity associated with the second wireless device and the user considering them to match; and

confirming, to the trusted server, verification of the identity of the object or entity associated with the second wireless device.

2. (Currently Amended) The method of claim 1 ~~additionally comprising~~ wherein the step of receiving visual identification information further comprises:

notifying [[a]] the user of the first wireless device of [[the]] proximity of the second wireless device or of [[the]] proximity of the object or entity associated with the second device.

3. (Currently Amended) The method of claim 1 further comprising, subsequent to, or coincident with, at least one of the step of confirming to the trusted server, verification of the identity of the object or entity associated with the second wireless device, the further step of:

sending a message to the trusted server, the message ~~representing a request to forward a message to the second wireless device~~ causing the trusted server to forward a message to the second wireless device.

4. (Currently Amended) The method of claim 1 additionally comprising, subsequent to, or coincident with, the step of confirming to the trusted server, verification of the identity of the object or entity associated with the second wireless device, the step of:

sending a message to the trusted server as part of a relationship brokering function coordinated by the server.

5. (Currently Amended) The method of claim 1 wherein the trusted server further performs the steps of:

coordinating with an application running on ~~at least one of the of the first and second wireless devices~~ the first wireless device, to perform a point of sale transaction utilizing user input received from ~~at least one of the first and second wireless devices~~ the first wireless device;

performing one or more ~~confirmations of~~ steps of the transaction; and

wherein at least one ~~confirmation~~ such step of the transaction additionally comprises:

~~sending a message to one of the first or second wireless devices to cause the application to display an identifying picture related to one of the devices,~~

prior to completion of the point of sale transaction,

receiving, from the first wireless device, the confirmation of verification of the identity of the object or entity associated with the second wireless device.

6. (Currently Amended) The method of claim 5 wherein both the first and second wireless devices perform at least one ~~transaction confirmation~~ step of the point of sale transaction.

7. (Currently Amended) The method of claim 6 wherein the trusted server further performs one or more of:

authorizing the transaction to a third party;

interacting with a point of sale application on the second wireless device to associate an itemized list of items with the second device;

confirming with the application on the second device, thereby requiring user input that the bill of goods list is correct;

storing information related to a detected account identity of the second device; and/or

storing information relating to inventory in a database.

8. (Currently Amended) A first wireless communication device communicating with two different wireless communication protocols, such that a first wireless protocol is used to receive identifiers from other wireless devices, and such that a second wireless protocol, different from a first wireless protocol, is used to communicate with a trusted server to confirm an identity of an object or entity associated with one of the other wireless devices, the first wireless communication device further comprising:

a first receiver, for receiving an identifier from a second wireless device using [[a]] the first wireless protocol, the identifier relating to an object or entity associated with the second wireless device;

a server transmitter, for sending the received identifier from the first wireless device to [[a]] the trusted server using [[a]] the second wireless protocol; [[and]]

a server receiver, for receiving visual identification information from the trusted server using the second wireless protocol, the visual identification information associated with [[an]] the entity or object associated with the second wireless device, wherein the further information additionally includes ~~a visual identification~~ at least an identifying picture of the object or entity associated with the second wireless device;

a display, for displaying on the first wireless device the identifying picture of the object or entity associated with the second wireless device;

a user input device, for receiving user input from a user of the first wireless device indicating that the user has compared the identifying picture with the object or entity associated with the second wireless device and considers them to match; and

wherein the server transmitter then confirms, to the trusted server, verification of the identity of the object or entity associated with the second wireless device.

9. (Currently Amended) The device of claim 8 additionally ~~comprising:~~

[[a]] wherein the display~~, for notifying a~~ also displays a notification to the user of the first wireless device of the proximity of the second wireless device, or of the proximity of the object or entity associated with the second wireless device.

10. (Currently Amended) The device of claim 8 wherein the server transmitter further sends a message to the trusted server representing a request to forward a message to the second wireless device.

11. (Currently Amended) The device of claim 8 wherein the server transmitter further sends a message to the trusted server as part of a relationship brokering function coordinated by the server.

12. (Currently Amended) The device of claim 8 wherein the trusted server has a processor configured to:

coordinate with an application running on ~~at least one of the of the first and second wireless devices~~ the first wireless device, to perform a point of sale transaction utilizing user input received from ~~at least one of the first and second wireless devices~~ the first wireless device;

perform one [[ore]] or more ~~confirmations of~~ steps of the transaction; and

~~a device transmitter, for sending a message to one of the first or second wireless devices to cause the application to display an identifying picture related to one of the devices,~~ and the trusted server further comprises:

a device receiver, for receiving prior to completion of the point of sale transaction, the confirmation of verification of the identity of the object or entity associated with the second wireless device.

13. (Currently Amended) The device of claim 12 wherein both the first and second devices perform at least one transaction confirmation step ~~after displaying the identifying picture~~.

14. (Currently Amended) The device of claim 13 wherein the processor in the trusted server:

authorizes the transaction to a third party;

interacts with a point of sale application to associate an itemized list of items with the second device;

confirms with the application on the second device, thereby requiring user input that the bill of goods list is correct;

stores information related to a detected account identity of the second device; and/or

stores information relating to inventory in a database.

15. (Cancelled).

16. (Currently Amended) The ~~apparatus~~ device of claim 8 wherein the ~~visual identification~~ identifying picture is an image of a person, a merchant, a merchant logo or a vending machine associated with the second wireless device.

17. (Withdrawn) A method for operating a first wireless device associated with a consumer, the method comprising:

searching for device identifiers for other wireless devices in proximity to the first wireless device;

receiving one or more device identifiers from a second wireless device, the device identifiers being received using a first wireless protocol over a first wireless link;

transmitting a request message to a server using a second wireless protocol over a second wireless link, the request message being a request for further information relating to whether one or more merchants are associated with the one or more device identifiers; receiving a response message from a server indicating that one or more merchant services are available;

displaying information concerning the available merchant services to the user of the first wireless device;

receiving an input from the user indicating that the user has selected a specific merchant to engage in a transaction;

transmitting a request message to a server requesting a transaction with the specific merchant;

receiving a response from a server providing a visual information relating to the identity of the specific merchant, the visual information sufficient for the user to independently determine the identity of the merchant;

displaying the visual information to the user; and

receiving a further input from the user acknowledging that the user has confirmed the identity of the merchant.

18. (Withdrawn) The method of claim 17 wherein the first wireless protocol is either a Bluetooth or wireless local area network protocol.

19. (Withdrawn) The method of claim 17 wherein the second wireless protocol is selected from the group consisting of as GPRS, EDGE, 1xEV-DO, IS-2000, Wi-Max, and LTE.

20. (Withdrawn) The method of claim 17 wherein the further information additionally comprises a picture of the specific merchant and/or other information relating to the particular merchant's business license.

21. (New). The method of claim 1 additionally comprising:

notifying the user of the first wireless device of proximity of the second wireless device or of proximity of the object or entity associated with the second device.

22. (New) The method of claim 1 further comprising, subsequent to, or coincident with, the step of confirming to the trusted server, verification of the identity of the object or entity associated with the second wireless device, the step of:

the trusted server further receiving a modified identifier which additionally confirms the identity of one of the first and second wireless devices such that the value of the modified identifier is coordinated with the trusted server such that the modified identifier remains associated either the first or second wireless device, wherein said modified identifier value otherwise varies based upon an algorithm.

23. (New) The method of claim 1 further comprising, subsequent to, or coincident with, the step of confirming to the trusted server, verification of the identity of the object or entity associated with the second wireless device, the step of:

the trusted server taking steps to allow an entity associated with the first wireless device to gain access to an object associated with the second wireless device.

24. (New) The method of claim 1 further comprising, subsequent to the step of sending the received identifier from the first wireless device to the trusted server using the second wireless protocol:

receiving said visual identification information at the first wireless device if an information disclosure policy associated with the said received identifier permits such action.

25. (New) The method of claim 24 wherein said information disclosure policy is based at least in part on the inclusion of the entity associated with the first wireless device on a friends list, or other list providing additional access to information associated with said received identifier.

26. (New) The method of Claim 1 further comprising, subsequent to the step of confirming, to the trusted server, verification of the identity of the object or entity associated with the second wireless device:

receiving further information from the trusted server, and in response thereto, executing an application program in accordance with instructions associated with the further information received from the trusted server.

27. (New) A method for operating a first wireless communication device, the first wireless device communicating using two different wireless communication protocols, such that a first wireless protocol is used to receive identifiers from other wireless devices, and such that a second wireless protocol, different from the first wireless protocol, is used to communicate with a trusted server to confirm an identity of an object or entity associated with one of the other wireless devices, the method comprising the steps of:

scanning for identifiers received from a plurality of other wireless devices using the first wireless protocol, the identifiers relating to an object or entity associated with the other wireless devices;

connecting to a trusted server using the second wireless protocol;

sending a plurality of the received identifiers from the first wireless device to the trusted server using the second wireless protocol;

receiving visual identification information from the trusted server also using the second wireless protocol, the visual identification information also associated with the plurality of entities or objects associated with the other wireless devices, wherein the

visual identification information additionally includes at least an identifying picture of the object or entity associated with each of the plurality of other wireless devices;

displaying, on the first wireless device, a plurality of the identifying pictures of the objects or entities associated with the other wireless devices;

receiving user input indicating a user of the first wireless device has compared at least one of the identifying pictures with an object or entity associated with a selected one of the other wireless devices and that they match; and

confirming, to the trusted server, verification of the identity of the object or entity associated with the selected one of the other wireless devices.

28. (New) The method of claim 27 wherein the identifying picture is an image of a person, a merchant, a merchant logo, business license, or a vending machine associated with the second wireless device.

29. (New) The method of claim 27 wherein one or more of the other wireless devices is a broadcast device, and the broadcast device transfers one of said received identifiers to the first wireless device using at least portions of said first wireless protocol.

30. (New) The method of claim 29 wherein at least one broadcast device has a single wireless connection.

31. (New) The method of claim 27 wherein one or more of the other wireless devices is a mobile wireless device having a wide area wireless connection and transfers one of said received identifiers to the first wireless device using at least portions of said first wireless protocol.

32. (New) The method of claim 27 wherein one or more of the other wireless devices is a mobile wireless device having a wide area wireless connection and further supporting the transfer of one of said received identifiers to the first wireless device from said mobile wireless device using at least portions of said first wireless protocol.

33. (New) The method of claim 32 wherein one or more of the other wireless devices is a mobile wireless device having a wide area wireless connection and further supporting the transfer of one of said received identifiers to the first wireless device from said mobile wireless device using at least portions of said first wireless protocol.

34. (New) The method of claim 27 wherein:

the first wireless device further receives user input requesting identification of one more vendors within proximity of the first wireless device, causing one or more of said scanning for identifiers, connecting to a trusted server, sending a plurality of identifiers, or displaying indentifying pictures steps to occur.

REMARKS

Claims 1-14 and 16, as amended above, remain in the case.

Claim 15 is cancelled.

Claims 17-20 remain withdrawn.

New claims 21-34 are being added by way of the foregoing amendment.

Applicants acknowledge the Amendment After Final filed with the U.S. Patent Office on February 11, 2011 will not be entered as stated in Examiner's Advisory Action dated February 25, 2011.

Applicants thank Examiner Hayles for the courtesy of a telephone interview on January 26, 2011 with the inventor and a follow-up conversation with the undersigned counsel on January 28, 2011. During those discussions the incorporation of various features from the dependent claims into the independent claims was discussed as a way to overcome the rejections in view of the prior art. The proposed amended claim set presented herein is believed to traverse and/or address all matters raised the current final rejection.

Specifically, it was discussed that the invention is directed to techniques for confirming an identity of an object or entity associated with a second wireless device, and that the confirmation is done by presenting an identifying picture of that object or entity, and then receiving user input indicating comparison of the identifying picture to an object or entity associated with the second wireless device to perform the identity verification.

The foregoing amendments address those concerns, and are believed to be are timely and appropriate, as they are adding features that were previously presented in the dependent claims into the independent claims. Specifically, previous dependent claim 5 had a step that required displaying an identifying picture related to at least one of the first or second wireless devices.

It is understood that claims 17 through 20 are subject to a restriction requirement because of the recitation of "device identifiers" and not particularly because of the recitation of the "searching", "receiving" or "transmitting" steps more generically. Aspects of now withdrawn claims 17-20 directed to allowing or providing for "determining the identity of a merchant" for example are no longer in the case.

With entry of the foregoing amendments to claims 1, 8, and new independent claim 27, it is believed that these claims further distinguish, and are patentable, over the combination of the Hammad and van Bosch prior art.

As discussed with the Examiner, in Hammad (see for example Fig. 1) the "customer exclusive data" is stored on the personal device and forwarded to the issuer (28) or the merchant access device (34). Even if the customer exclusive data could be considered to include a photographic image of the user (and that is not necessarily the case in Hammad) the image is moving from the personal device to the network. In the claimed invention, the image of the entity or object is flowing from the trusted server to the wireless device.

In van Bosch, a photo image originates at the user wireless device 110 and in an initial provisioning step (Paragraph 61), is forwarded to a trusted party 14 (step 540 of FIG. 5). The trusted party then modifies the photo image by superimposing an authentication code to the image in step 650 of FIG. 6, and stores the authentication code in step 670. When the trusted party 140 adds the code, the modified image is sent back down to the same wireless device 110. The wireless device, also during the provisioning process, stores the superimposed image (paragraph 65), in the same wireless device 110, for later use in proximity transactions (step 560, and paragraph 65).

The steps of processing the image from the user device are further described in Fig. 6, and paragraphs 66 and 67. But there is no notion in Van Bosch of the trusted party 14 providing the image to any device other than the same wireless device 110, and in that case, only in the initial provisioning step. There is no notion of the trusted party (14) providing the image to the point of sale (POS) terminal 150 as part of an identity confirmation process. In contrast, as described in paragraphs 70 and 71 of Van Bosch, the wireless device may display the image on the user's device (110) for the operator of the POS terminal to observe, or the wireless device may transfer the superimposed image to the POS terminal 150. But these steps do not involve the trusted party 14 to distribute the image to the POS terminal.

Also there is no notion or suggestion that when that image is forwarded to the POS terminal there is any input indicating matching of the image against an object or an entity associated with a second wireless device -- only the entering of a code.

Further, there is no notion or suggestion that the image may be provided by the trusted party to the POS terminal (150) in response to connecting to the trusted party 14, or in response to the POS terminal sending an identifier to the trusted party, using a different wireless protocol for sending the response than the protocol that was used for receiving the identifier from the wireless device 110 – all being features of Applicants' claims.

CONCLUSION

In view of the above amendments and remarks, it is believed that all claims are in condition for allowance, and it is respectfully requested that the application be passed to issue. If the Examiner feels that a telephone conference would expedite prosecution of this case, the Examiner is invited to call the undersigned.

Respectfully submitted,

HAMILTON, BROOK, SMITH & REYNOLDS, P.C.

By /David J. Thibodeau Jr. Reg. No. 31671/
David J. Thibodeau, Jr.
Registration No. 31,671
Telephone: (978) 341-0036
Facsimile: (978) 341-0136

Concord, MA 01742-9133
Date: March 23, 2011

Electronic Patent Application Fee Transmittal

Application Number:	12364823
Filing Date:	03-Feb-2009
Title of Invention:	VISUAL IDENTIFICATION INFORMATION USED AS CONFIRMATION IN A WIRELESS COMMUNICATION
First Named Inventor/Applicant Name:	James Arthur Proctor
Filer:	David J. Thibodeau/ann giso
Attorney Docket Number:	4394.1003-000

Filed as Small Entity

Utility under 35 USC 111(a) Filing Fees

Description	Fee Code	Quantity	Amount	Sub-Total in USD($)
Basic Filing:				
Pages:				
Claims:				
Claims in excess of 20	2202	13	26	338
Miscellaneous-Filing:				
Petition:				
Patent-Appeals-and-Interference:				
Post-Allowance-and-Post-Issuance:				
Extension-of-Time:				

Description	Fee Code	Quantity	Amount	Sub-Total in USD($)
Miscellaneous:				
Request for continued examination	2801	1	405	405
		Total in USD ($)		**743**

Electronic Acknowledgement Receipt

EFS ID:	9719997
Application Number:	12364823
International Application Number:	
Confirmation Number:	4791
Title of Invention:	VISUAL IDENTIFICATION INFORMATION USED AS CONFIRMATION IN A WIRELESS COMMUNICATION
First Named Inventor/Applicant Name:	James Arthur Proctor
Customer Number:	21005
Filer:	David J. Thibodeau/ann giso
Filer Authorized By:	David J. Thibodeau
Attorney Docket Number:	4394.1003-000
Receipt Date:	23-MAR-2011
Filing Date:	03-FEB-2009
Time Stamp:	16:32:06
Application Type:	Utility under 35 USC 111(a)

Payment information:

Submitted with Payment	yes
Payment Type	Deposit Account
Payment was successfully received in RAM	$743
RAM confirmation Number	4613
Deposit Account	080380
Authorized User	

The Director of the USPTO is hereby authorized to charge indicated fees and credit any overpayment as follows:

Charge any Additional Fees required under 37 C.F.R. Section 1.21 (Miscellaneous fees and charges)

File Listing:

Document Number	Document Description	File Name	File Size(Bytes)/ Message Digest	Multi Part /.zip	Pages (if appl.)
1	Miscellaneous Incoming Letter	43941003000FeeTransmittal.pdf	87255 f442614f79f61198777a396cd7df755e78d5f85d	no	3
Warnings:					
Information:					
2	Petition to make special based on Age/ Health	43941003000PetitiontoMakeSpecialAge.pdf	40843 080135b3dacf91a9a54ac3c48cc101bfc9e4f79f	no	1
Warnings:					
Information:					
3	Request for Continued Examination (RCE)	43941003000RCE.PDF	137658 d3aa8da5e210493e2d630647c8954a34fb487244	no	1
Warnings:					
This is not a USPTO supplied RCE SB30 form.					
Information:					
4		43941003000PREAMD.pdf	91937 a9726ca3b1f8d1d71bd8b61709ab11891a21446f	yes	14

Multipart Description/PDF files in .zip description

Document Description	Start	End
Amendment Submitted/Entered with Filing of CPA/RCE	1	1
Claims	2	11
Applicant Arguments/Remarks Made in an Amendment	12	14

Warnings:					
Information:					
5	Fee Worksheet (PTO-875)	fee-info.pdf	32064 3b052f1e52c30db52a493cf79d5525919479ba29	no	2
Warnings:					
Information:					
			Total Files Size (in bytes):	389757	

This Acknowledgement Receipt evidences receipt on the noted date by the USPTO of the indicated documents, characterized by the applicant, and including page counts, where applicable. It serves as evidence of receipt similar to a Post Card, as described in MPEP 503.

New Applications Under 35 U.S.C. 111
If a new application is being filed and the application includes the necessary components for a filing date (see 37 CFR 1.53(b)-(d) and MPEP 506), a Filing Receipt (37 CFR 1.54) will be issued in due course and the date shown on this Acknowledgement Receipt will establish the filing date of the application.

National Stage of an International Application under 35 U.S.C. 371
If a timely submission to enter the national stage of an international application is compliant with the conditions of 35 U.S.C. 371 and other applicable requirements a Form PCT/DO/EO/903 indicating acceptance of the application as a national stage submission under 35 U.S.C. 371 will be issued in addition to the Filing Receipt, in due course.

New International Application Filed with the USPTO as a Receiving Office
If a new international application is being filed and the international application includes the necessary components for an international filing date (see PCT Article 11 and MPEP 1810), a Notification of the International Application Number and of the International Filing Date (Form PCT/RO/105) will be issued in due course, subject to prescriptions concerning national security, and the date shown on this Acknowledgement Receipt will establish the international filing date of the application.

DJT/amg
March 23, 2011

PATENT APPLICATION
DOCKET NO. 4394.1003-000

IN THE UNITED STATES PATENT AND TRADEMARK OFFICE

Applicant:	James Arthur Proctor, Jr. and James Arthur Proctor, III		
Application No.:	12/364,823	Group:	3687
Filed:	February 3, 2009	Examiner:	Hayles, Ashford S.
Confirmation No.:	4791		
For:	Visual Identification Information Used As Confirmation In A Wireless Communication		

CERTIFICATE OF MAILING OR TRANSMISSION

I hereby certify that this correspondence is being deposited with the United States Postal Service with sufficient postage as First Class Mail in an envelope addressed to Commissioner for Patents, P.O. Box 1450, Alexandria, VA 22313-1450, or is being facsimile transmitted to the United States Patent and Trademark Office on:

_____ _____
Date Signature

_____
Typed or printed name of person signing certificate

Mail Stop RCE
Commissioner for Patents
P.O. Box 1450
Alexandria, VA 22313-1450

Sir:

Transmitted herewith is a Preliminary Amendment filed with Request for Continued Examination for filing in the above-identified application.

☒ Small entity status of this application under 37 CFR 1.9 and 1.27 has been established by a Small Entity Statement previously submitted.

☐ A Small Entity Statement to establish small entity status under 37 CFR 1.9 and 1.27 is enclosed.

1072929.1

The claims fee has been calculated as shown below:

	CLAIMS REMAINING AFTER AMENDMENT		HIGHEST NO. PREVIOUSLY PAID FOR	PRESENT EXTRA	SMALL ENTITY RATE	SMALL ENTITY ADDIT. FEE	OR	OTHER THAN SMALL ENTITY RATE	OTHER THAN SMALL ENTITY ADDIT. FEE
TOTAL	33	MINUS	* 20	13	X $ 26	$ 338		X $52	$
INDEP	4	MINUS	** 4	0	X $110	$		X $220	$
☐ FIRST PRESENTATION OF MULTIPLE DEP. CLAIM					+ $195	$		+ $390	$
					TOTAL =	$ 338		TOTAL =	$ 0

* not fewer than 20
** not fewer than 3

The Application Size Fee has been calculated as shown below:
(Effective for cases filed on or after December 8, 2004)

Actual Sheets (Including current amendment)	Highest No. of Sheets Paid For (At least 100)	No. of Additional Units Required (Increments of 50 sheets)	SMALL ENTITY Rate	SMALL ENTITY Total Amount Owed	OTHER THAN SMALL ENTITY Rate	OTHER THAN SMALL ENTITY Total Amount Owed	Payment Sufficient for up to
66	100	0	X $135	$[ ]	X $270	$[ ]	100 Sheets

Petition for Extension of Time

☐ Applicant hereby petitions to extend the time to respond to the [ ] dated [ ] for [ ] month(s) from [ ] to [ ]. The appropriate fee is set forth below.

☐

Please charge Deposit Account No. 08-0380 for the following fees:

☐	Petition for [ ] month Extension of Time	$	
☒	Claims Fee	$	338
☐	Application Size Fee	$	
☒	Other Fees:		
	Request for Continued Examination Fee	$	405
		$	
	TOTAL:	$	743

A check is enclosed in payment of the following fees:

☐	Petition for [ ] month Extension of Time	$	
☐	Claims Fee	$	
☐	Application Size Fee	$	
☐	Other Fees:		
		$	
		$	
	TOTAL:	$	

☒ Please charge any deficiency or credit any overpayment in the fees that may be due in this matter to Deposit Account No. 08-0380.

Respectfully submitted,

HAMILTON, BROOK, SMITH & REYNOLDS, P.C.

By /David J. Thibodeau Jr. Reg No 31671/

David J. Thibodeau, Jr.
Registration No.: 31,671
Telephone (978) 341-0036
Facsimile (978) 341-0136

Concord, Massachusetts 01742-9133
Dated: March 23, 2011

1072929.1

PTO/SB/06 (07-06)
Approved for use through 1/31/2007. OMB 0651-0032
U.S. Patent and Trademark Office; U.S. DEPARTMENT OF COMMERCE
Under the Paperwork Reduction Act of 1995, no persons are required to respond to a collection of information unless it displays a valid OMB control number.

PATENT APPLICATION FEE DETERMINATION RECORD

Substitute for Form PTO-875

Application or Docket Number	Filing Date	
12/364,823	02/03/2009	☐ To be Mailed

APPLICATION AS FILED – PART I

FOR	(Column 1) NUMBER FILED	(Column 2) NUMBER EXTRA	SMALL ENTITY ☒ RATE ($)	SMALL ENTITY FEE ($)	OR	OTHER THAN SMALL ENTITY RATE ($)	OTHER THAN SMALL ENTITY FEE ($)
☐ BASIC FEE (37 CFR 1.16(a), (b), or (c))	N/A	N/A	N/A			N/A	
☐ SEARCH FEE (37 CFR 1.16(k), (i), or (m))	N/A	N/A	N/A			N/A	
☐ EXAMINATION FEE (37 CFR 1.16(o), (p), or (q))	N/A	N/A	N/A			N/A	
TOTAL CLAIMS (37 CFR 1.16(i))	minus 20 =	*	X $ =		OR	X $ =	
INDEPENDENT CLAIMS (37 CFR 1.16(h))	minus 3 =	*	X $ =			X $ =	
☐ APPLICATION SIZE FEE (37 CFR 1.16(s))	If the specification and drawings exceed 100 sheets of paper, the application size fee due is $250 ($125 for small entity) for each additional 50 sheets or fraction thereof. See 35 U.S.C. 41(a)(1)(G) and 37 CFR 1.16(s).						
☐ MULTIPLE DEPENDENT CLAIM PRESENT (37 CFR 1.16(j))							
* If the difference in column 1 is less than zero, enter "0" in column 2.			TOTAL			TOTAL	

APPLICATION AS AMENDED – PART II

AMENDMENT 03/23/2011

	(Column 1) CLAIMS REMAINING AFTER AMENDMENT		(Column 2) HIGHEST NUMBER PREVIOUSLY PAID FOR	(Column 3) PRESENT EXTRA	SMALL ENTITY RATE ($)	SMALL ENTITY ADDITIONAL FEE ($)	OR	OTHER THAN SMALL ENTITY RATE ($)	OTHER THAN SMALL ENTITY ADDITIONAL FEE ($)
Total (37 CFR 1.16(i))	* 33	Minus	** 20	= 13	X $26 =	338	OR	X $ =	
Independent (37 CFR 1.16(h))	* 4	Minus	***4	= 0	X $110 =	0	OR	X $ =	
☐ Application Size Fee (37 CFR 1.16(s))									
☐ FIRST PRESENTATION OF MULTIPLE DEPENDENT CLAIM (37 CFR 1.16(j))							OR		
					TOTAL ADD'L FEE	338	OR	TOTAL ADD'L FEE	

AMENDMENT

	(Column 1) CLAIMS REMAINING AFTER AMENDMENT		(Column 2) HIGHEST NUMBER PREVIOUSLY PAID FOR	(Column 3) PRESENT EXTRA	RATE ($)	ADDITIONAL FEE ($)	OR	RATE ($)	ADDITIONAL FEE ($)
Total (37 CFR 1.16(i))	*	Minus	**	=	X $ =		OR	X $ =	
Independent (37 CFR 1.16(h))	*	Minus	***	=	X $ =		OR	X $ =	
☐ Application Size Fee (37 CFR 1.16(s))									
☐ FIRST PRESENTATION OF MULTIPLE DEPENDENT CLAIM (37 CFR 1.16(j))							OR		
					TOTAL ADD'L FEE		OR	TOTAL ADD'L FEE	

* If the entry in column 1 is less than the entry in column 2, write "0" in column 3.
** If the "Highest Number Previously Paid For" IN THIS SPACE is less than 20, enter "20".
*** If the "Highest Number Previously Paid For" IN THIS SPACE is less than 3, enter "3".
The "Highest Number Previously Paid For" (Total or Independent) is the highest number found in the appropriate box in column 1.

Legal Instrument Examiner:
//Ms. Regina D. Baltimore//

This collection of information is required by 37 CFR 1.16. The information is required to obtain or retain a benefit by the public which is to file (and by the USPTO to process) an application. Confidentiality is governed by 35 U.S.C. 122 and 37 CFR 1.14. This collection is estimated to take 12 minutes to complete, including gathering, preparing, and submitting the completed application form to the USPTO. Time will vary depending upon the individual case. Any comments on the amount of time you require to complete this form and/or suggestions for reducing this burden, should be sent to the Chief Information Officer, U.S. Patent and Trademark Office, U.S. Department of Commerce, P.O. Box 1450, Alexandria, VA 22313-1450. DO NOT SEND FEES OR COMPLETED FORMS TO THIS ADDRESS. **SEND TO: Commissioner for Patents, P.O. Box 1450, Alexandria, VA 22313-1450.**

If you need assistance in completing the form, call 1-800-PTO-9199 and select option 2.

Substitute for form 1449B/PTO **SUPPLEMENTAL INFORMATION DISCLOSURE STATEMENT IN AN APPLICATION** **LISTING OF REFERENCES** **(April 14, 2011)** (Use several sheets if necessary)	ATTORNEY DOCKET NO. 4394.1003-000		APPLICATION NO. 12/364,823
	FIRST NAMED INVENTOR James Arthur Proctor, Jr.		FILING DATE February 3, 2009
	EXAMINER Hayles, Ashford S.	CONFIRMATION NO. 4791	GROUP 3687

U.S. PATENT DOCUMENTS

Examiner's Initials	Ref. No.	DOCUMENT NUMBER Number-Kind Code (if known)	ISSUE DATE / PUBLICATION DATE MM-DD-YYYY	NAME OF PATENTEE OR APPLICANT OF CITED DOCUMENT
	A35	7,876,701 B2	01-25-2011	Li, *et al.*
	A36	2009/0325601 A1	12-31-2009	Park, *et al.*
	A37	2009/0323648 A1	12-31-2009	Park, *et al.*
	A38	2009/0323647 A1	12-31-2009	Park, *et al.*
	A39	2009/0310517 A1	12-17-2009	Narayanan, *et al.*
	A40	2009/0287827 A1	11-19-2009	Horn, *et al.*
	A41	2009/0285119 A1	11-19-2009	Horn, *et al.*
	A42	2009/0270120 A1	10-29-2009	Park
	A43	2009/0019168 A1	01-15-2009	Wu, *et al.*
	A44	2009/0016524 A1	01-15-2009	Park, *et al.*
	A45	2009/0016353 A1	01-15-2009	Li, *et al.*
	A46	2009/0016315 A1	01-15-2009	Laroia, *et al.*
	A47	2009/0016255 A1	01-15-2009	Park
	A48	2009/0016250 A1	01-15-2009	Li, *et al.*
	A49	2009/0016248 A1	01-15-2009	Li, *et al.*
	A50	2008/0037487 A1	02-14-2008	Li, *et al.*
	A51	2007/0242765 A1	10-18-2007	Parizhisky, *et al.*

Copies of issued U.S. Patents and Published U.S. Applications are not required and are not being provided. We are not listing separately any prior U.S. Patent Office communications regarding the cited documents because the Examiner has access to any such actions through PAIR.

EXAMINER	DATE CONSIDERED

1080906.1

Substitute for form 1449B/PTO **SUPPLEMENTAL INFORMATION DISCLOSURE STATEMENT IN AN APPLICATION** **LISTING OF REFERENCES** **(April 14, 2011)** (Use several sheets if necessary)	ATTORNEY DOCKET NO. 4394.1003-000		APPLICATION NO. 12/364,823
	FIRST NAMED INVENTOR James Arthur Proctor, Jr.		FILING DATE February 3, 2009
	EXAMINER Hayles, Ashford S.	CONFIRMATION NO. 4791	GROUP 3687

Examiner's Initials	Ref. No.	**OTHER DOCUMENTS** *(Including Author, Title, Date, Pertinent Pages, Etc.)*
	C4	Office Action; U.S. Application No. 12/364,828; Date of Mailing: September 15, 2010. *
	C5	Office Action; U.S. Application No. 12/364,938; Date of Mailing: September 14, 2010. *
	C6	Office Action; U.S. Application No. 12/364,819; Date of Mailing: November 15, 2010. *
	C7	Provisional Application No. 60/758,010 filed January 11, 2006.*
	C8	Provisional Application No. 60/758,011 filed January 11, 2006.*
	C9	Provisional Application No. 60/758,012 filed January 11, 2006.*
	C10	Provisional Application No. 60/845,051 filed September 15, 2006.*
	C11	Provisional Application No. 60/845,052 filed September 15, 2006.*
	C12	Provisional Application No. 60/863,304 filed October 27, 2006.*

***Copies of any U.S. Office Communications or non-published U.S. Patent Applications are not being provided because the examiner has access to such documents through PAIR. We are not listing separately any prior U.S. Patent Office communications regarding the cited documents because the Examiner has access to any such actions through PAIR.**

EXAMINER	DATE CONSIDERED

1080906.1

DJT/amg(cef)
April 14, 2011

PATENT APPLICATION
DOCKET NO.: 4394.1003-000

IN THE UNITED STATES PATENT AND TRADEMARK OFFICE

Applicant:	James Arthur Proctor, Jr., and James Arthur Proctor III		
Application No.:	12/364,823	Group:	3687
Filed:	February 3, 2009	Examiner:	Hayles, Ashford S.
Confirmation No.:	4791		
For:	Visual Identification Information Used As Confirmation In A Wireless Communication		

CERTIFICATE OF MAILING OR TRANSMISSION

I hereby certify that this correspondence is being deposited with the United States Postal Service with sufficient postage as First Class Mail in an envelope addressed to Commissioner for Patents, P.O. Box 1450, Alexandria, VA 22313-1450, or is being facsimile transmitted to the United States Patent and Trademark Office on:

_____ _____
Date Signature

_____
Typed or printed name of person signing certificate

TRANSMITTAL LETTER FOR
SUPPLEMENTAL INFORMATION DISCLOSURE STATEMENT

Mail Stop Amendment
Commissioner for Patents
P.O. Box 1450
Alexandria, VA 22313-1450

Sir:

This Information Disclosure Statement is submitted:

☒ under 37 CFR 1.97(b), or
(Within any one of the following time periods: three months of filing national application (other than a CPA) or date of entry of the national stage in an international application; or before the mailing date of a first office action on the merits; or before the mailing of a first office action after the filing of a Request for Continued Examination).

☐ under 37 CFR 1.97(c) together with either:
- ☐ a Statement under 37 CFR 1.97(e), as checked below, or
- ☐ a $180.00 fee under 37 CFR 1.17(p), or
  (After the 37 CFR 1.97(b) time period, but before any of a final action, notice of allowance, or an action that closes prosecution, whichever occurs first)

☐ under 37 CFR 1.97(d) together with:
- ☐ a Statement under 37 CFR 1.97(e), as checked below, and
- ☐ a $180.00 fee under 37 CFR 1.17(p), or
  (Filed after final action, notice of allowance, whichever occurs first, or if prosecution otherwise closes, but on or before payment of the issue fee)

☐ under 37 CFR 1.97(i):
Applicant requests that the IDS and cited reference(s) be placed in the application file.
(Filed after payment of issue fee)

1080933.1

Statement Under 37 CFR 1.97(e)

☐ Each item of information contained in this Information Disclosure Statement was first cited in any communication from a foreign patent office in a counterpart foreign application not more than three months prior to the filing of this Information Disclosure Statement; or

☐ No item of information contained in this Information Disclosure Statement was cited in a communication from a foreign patent office in a counterpart foreign application, and, to the knowledge of the undersigned, after making reasonable inquiry, no item of information contained in the information disclosure statement was known to any individual designated in 37 CFR 1.56(c) more than three months prior to the filing of this Information Disclosure Statement.

Statement Under 37 CFR 1.704(d) (Patent Term Adjustment)
Applies to original applications (other than design) filed on or after May 29, 2000

☐ Each item of information contained in the Information Disclosure Statement was cited in a communication from a foreign patent office in a counterpart application and this communication was not received by any individual designated in § 1.56(c) more than thirty days prior to the filing of the Information Disclosure Statement.

☒ Enclosed herewith is a Listing of References. Copies of the cited references are enclosed except as indicated below or in the attached Listing of References.

☐ Copies of the cited references submitted with an Information Disclosure Statement in prior application, U.S. Application No. [ ], to which priority under 35 U.S.C. 120 is claimed, are not required under 37 CFR 1.98(d)(1) and (2) and are thus not provided.

☐ The listed references were cited in the enclosed Search Report in counterpart foreign application [add application number], which is listed in the attached Listing of References.

☐ The "concise explanation" requirement (non-English references) for reference(s) [ ] under 37 CFR 1.98(a)(3) is satisfied by:

- ☐ the explanation provided on the attached sheet.
- ☐ the explanation provided in the Specification.
- ☐ submission of the enclosed International Search Report.
- ☐ submission of the enclosed English-language version of a foreign Search Report and/or foreign Office Action.
- ☐ the enclosed English language abstract.

Method of payment:

☐ Authorization is NOT granted to charge any fees which may be due in this matter to our Deposit Account.

☐ Please charge Deposit Account 08-0380 in the amount of $[ ].

☐ A check for the fee noted above is enclosed, or the fee has been included in the check with the accompanying Reply.

☒ Please charge any deficiency in fees and credit any overpayment to Deposit Account 08-0380.

Respectfully submitted,

HAMILTON, BROOK, SMITH & REYNOLDS, P.C.

By /David J. Thibodeau Jr reg No 31671/
David J. Thibodeau, Jr.
Registration No. 31,671
Telephone: (978) 341-0036
Facsimile: (978) 341-0136

Concord, MA 01742-9133
Dated: April 15, 2011

Electronic Acknowledgement Receipt

EFS ID:	9886884
Application Number:	12364823
International Application Number:	
Confirmation Number:	4791
Title of Invention:	VISUAL IDENTIFICATION INFORMATION USED AS CONFIRMATION IN A WIRELESS COMMUNICATION
First Named Inventor/Applicant Name:	James Arthur Proctor
Customer Number:	21005
Filer:	David J. Thibodeau/Wendy Penniman
Filer Authorized By:	David J. Thibodeau
Attorney Docket Number:	4394.1003-000
Receipt Date:	15-APR-2011
Filing Date:	03-FEB-2009
Time Stamp:	14:44:36
Application Type:	Utility under 35 USC 111(a)

Payment information:

Submitted with Payment	no

File Listing:

Document Number	Document Description	File Name	File Size(Bytes)/ Message Digest	Multi Part /.zip	Pages (if appl.)
1	Information Disclosure Statement (IDS) Filed (SB/08)	439410030001449ListofRefs.pdf	86772 c1253f321cf1bcbb60bb1810d9b1916f092f3375	no	2

Warnings:

Information:

This is not an USPTO supplied IDS fillable form					
2	Transmittal Letter	43941003000TransmitIDS.pdf	74073 42fe8d8a9e10f8a7f14b955181abb371f7b2432f	no	3
Warnings:					
Information:					
			Total Files Size (in bytes):	160845	

This Acknowledgement Receipt evidences receipt on the noted date by the USPTO of the indicated documents, characterized by the applicant, and including page counts, where applicable. It serves as evidence of receipt similar to a Post Card, as described in MPEP 503.

New Applications Under 35 U.S.C. 111
If a new application is being filed and the application includes the necessary components for a filing date (see 37 CFR 1.53(b)-(d) and MPEP 506), a Filing Receipt (37 CFR 1.54) will be issued in due course and the date shown on this Acknowledgement Receipt will establish the filing date of the application.

National Stage of an International Application under 35 U.S.C. 371
If a timely submission to enter the national stage of an international application is compliant with the conditions of 35 U.S.C. 371 and other applicable requirements a Form PCT/DO/EO/903 indicating acceptance of the application as a national stage submission under 35 U.S.C. 371 will be issued in addition to the Filing Receipt, in due course.

New International Application Filed with the USPTO as a Receiving Office
If a new international application is being filed and the international application includes the necessary components for an international filing date (see PCT Article 11 and MPEP 1810), a Notification of the International Application Number and of the International Filing Date (Form PCT/RO/105) will be issued in due course, subject to prescriptions concerning national security, and the date shown on this Acknowledgement Receipt will establish the international filing date of the application.

UNITED STATES PATENT AND TRADEMARK OFFICE

Commissioner for Patents
United States Patent and Trademark Office
P.O. Box 1450
Alexandria, VA 22313-1450
www.uspto.gov

HAMILTON, BROOK, SMITH & REYNOLDS, P.C.
530 VIRGINIA ROAD
P.O. BOX 9133
CONCORD MA 01742-9133

MAILED

MAY 18 2011

OFFICE OF PETITIONS

In re Application of	:	
Proctor et al.	:	
Application No. 12/364,823	:	ON PETITION
Filed: February 3, 2009		
Attorney Docket No. 4394.1003-000	:	
	:	

This is a decision on the petition under 37 CFR 1.102(c)(1), filed March 23, 2011, to make the above-identified application special based on applicant's age as set forth in M.P.E.P. § 708.02, Section IV.

The petition is **GRANTED**.

A grantable petition to make an application special under 37 CFR 1.102(c)(1) and MPEP § 708.02, Section IV: Applicant's Age must be accompanied by evidence showing that at least one of the applicants is 65 years of age, or more, such as a birth certificate or a statement by applicant. No fee is required

The instant petition includes a statement by applicant's attorney that applicant is 65 years of age. Accordingly, the above-identified application has been accorded "special" status.

Telephone inquiries concerning this decision should be directed to the undersigned at 571-272-7751. All other inquiries concerning either the examination or status of the application should be directed to the Technology Center.

This matter is being referred to the Technology Center Art Unit 3687 for action on the merits commensurate with this decision.

/Joan Olszewski/
Joan Olszewski
Petitions Examiner
Office of Petitions

IN THE UNITED STATES PATENT AND TRADEMARK OFFICE

Applicants: James Arthur Proctor, Jr. and James Arthur Proctor, III

Application No.: 12/364,823 Group: 3687

Filed: February 3, 2009 Examiner: Hayles, Ashford S.

Confirmation No.: 4791

For: Visual Identification Information Used As Confirmation In A Wireless Communication

CERTIFICATE OF MAILING OR TRANSMISSION

I hereby certify that this correspondence is being deposited with the United States Postal Service with sufficient postage as First Class Mail in an envelope addressed to Commissioner for Patents, P.O. Box 1450, Alexandria, VA 22313-1450, or is being facsimile transmitted to the United States Patent and Trademark Office on:

_____ _____
Date Signature

_____
Typed or printed name of person signing certificate

TRANSMITTAL OF REPLACEMENT DRAWING

Mail Stop Amendment
Commissioner for Patents
P.O. Box 1450
Alexandria, VA 22313-1450

Sir:

The Applicant understands the above application is being prepared for issuance.

A potential problem exists with respect to Figure 2 as having a lead line without a reference number. Applicants are submitting herewith a replacement Figure 2 in which the extraneous lead line has been removed. The corresponding text of the specification at page 12, line 13 through page 13, line 5 now corresponds to the replacement Figure 2 as presented herewith.

It is believed that all requirements should now be satisfied for allowance and issue.

Respectfully submitted,

HAMILTON, BROOK, SMITH & REYNOLDS, P.C.

By /David J Thibodeau Jr Reg No 31671/
David J. Thibodeau, Jr.
Registration No.: 31,671
Telephone: (978) 341-0036
Facsimile: (978) 341-0136

Concord, MA 01742-9133
Date: September 13, 2011

Appl'n No.: 12/364,823
Title: Visual Identification Information …
Inventors: James Arthur Proctor, Jr. *et al.*
Annotated Sheet

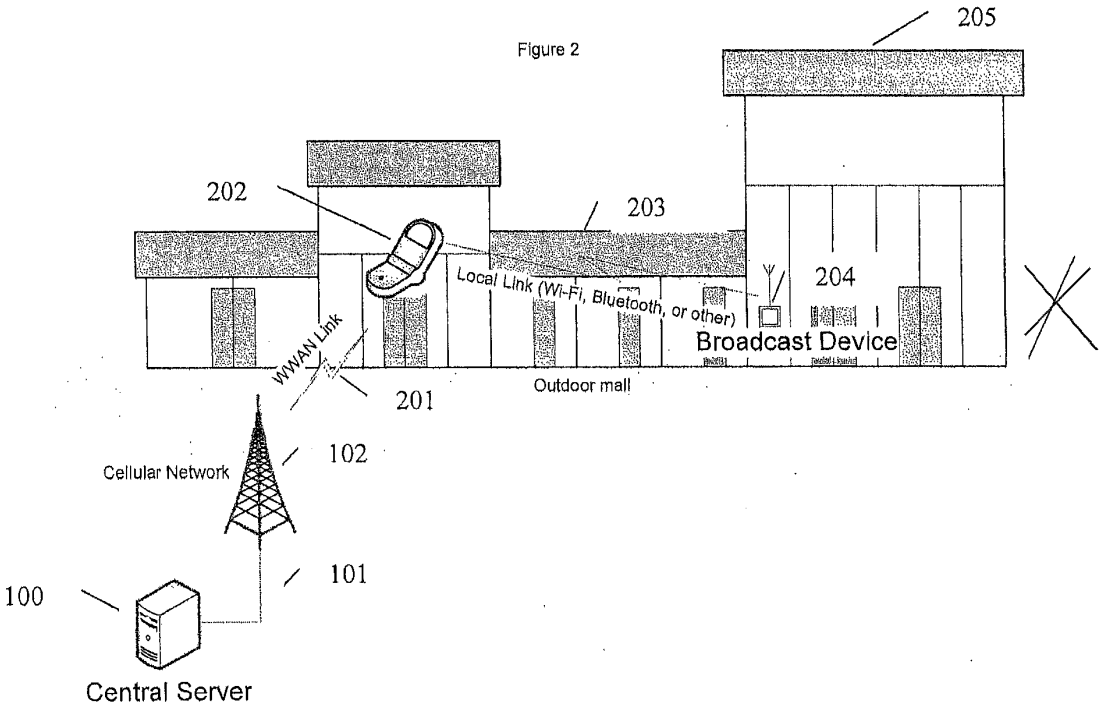

Figure 2

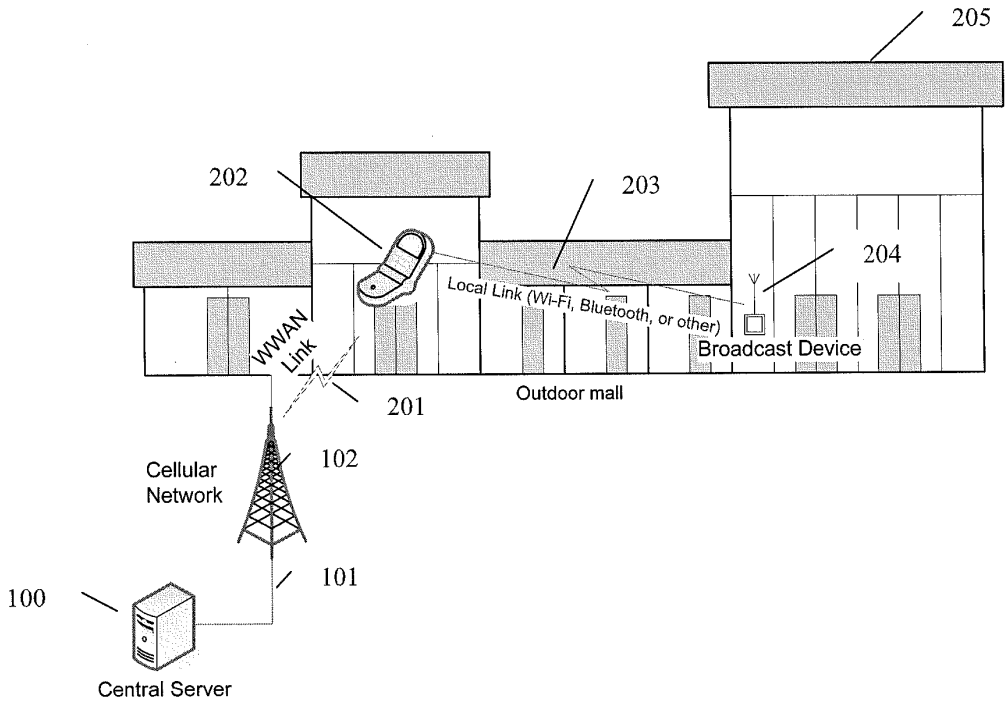
205
202
203
204
Local Link (Wi-Fi, Bluetooth, or other)
Broadcast Device
WWAN Link
201
Outdoor mall
Cellular Network
102
101
100
Central Server

Electronic Acknowledgement Receipt

EFS ID:	10937565
Application Number:	12364823
International Application Number:	
Confirmation Number:	4791
Title of Invention:	VISUAL IDENTIFICATION INFORMATION USED AS CONFIRMATION IN A WIRELESS COMMUNICATION
First Named Inventor/Applicant Name:	James Arthur Proctor
Customer Number:	21005
Filer:	David J. Thibodeau/Meredith Eschauzier
Filer Authorized By:	David J. Thibodeau
Attorney Docket Number:	4394.1003-000
Receipt Date:	13-SEP-2011
Filing Date:	03-FEB-2009
Time Stamp:	21:04:15
Application Type:	Utility under 35 USC 111(a)

Payment information:

Submitted with Payment	no

File Listing:

Document Number	Document Description	File Name	File Size(Bytes)/ Message Digest	Multi Part /.zip	Pages (if appl.)
1	Miscellaneous Incoming Letter	43941003000TransmittalofReplacementFigs.pdf	54865 3e8d4d7bd4a46dbf209750a8986bcf32c4ce6a29	no	2

Warnings:

Information:

2	Drawings-only black and white line drawings	43941003000AnnotatedSheet.PDF	53675 67583f76d2a2599e810d4c92401748de78fe43f9	no	1
Warnings:					
Information:					
3	Drawings-only black and white line drawings	43941003000ReplacementSheet.PDF	56547 6a7c916ef203761f6ce5b6e7a8acea1ecd4e0298	no	1
Warnings:					
Information:					
			Total Files Size (in bytes):	165087	

This Acknowledgement Receipt evidences receipt on the noted date by the USPTO of the indicated documents, characterized by the applicant, and including page counts, where applicable. It serves as evidence of receipt similar to a Post Card, as described in MPEP 503.

<u>New Applications Under 35 U.S.C. 111</u>
If a new application is being filed and the application includes the necessary components for a filing date (see 37 CFR 1.53(b)-(d) and MPEP 506), a Filing Receipt (37 CFR 1.54) will be issued in due course and the date shown on this Acknowledgement Receipt will establish the filing date of the application.

<u>National Stage of an International Application under 35 U.S.C. 371</u>
If a timely submission to enter the national stage of an international application is compliant with the conditions of 35 U.S.C. 371 and other applicable requirements a Form PCT/DO/EO/903 indicating acceptance of the application as a national stage submission under 35 U.S.C. 371 will be issued in addition to the Filing Receipt, in due course.

<u>New International Application Filed with the USPTO as a Receiving Office</u>
If a new international application is being filed and the international application includes the necessary components for an international filing date (see PCT Article 11 and MPEP 1810), a Notification of the International Application Number and of the International Filing Date (Form PCT/RO/105) will be issued in due course, subject to prescriptions concerning national security, and the date shown on this Acknowledgement Receipt will establish the international filing date of the application.

UNITED STATES PATENT AND TRADEMARK OFFICE

UNITED STATES DEPARTMENT OF COMMERCE
United States Patent and Trademark Office
Address: COMMISSIONER FOR PATENTS
P.O. Box 1450
Alexandria, Virginia 22313-1450
www.uspto.gov

NOTICE OF ALLOWANCE AND FEE(S) DUE

21005 7590 09/29/2011
HAMILTON, BROOK, SMITH & REYNOLDS, P.C.
530 VIRGINIA ROAD
P.O. BOX 9133
CONCORD, MA 01742-9133

EXAMINER
HAYLES, ASHFORD S

ART UNIT	PAPER NUMBER
3687	

DATE MAILED: 09/29/2011

APPLICATION NO.	FILING DATE	FIRST NAMED INVENTOR	ATTORNEY DOCKET NO.	CONFIRMATION NO.
12/364,823	02/03/2009	James Arthur Proctor JR.	4394.1003-000	4791

TITLE OF INVENTION: VISUAL IDENTIFICATION INFORMATION USED AS CONFIRMATION IN A WIRELESS COMMUNICATION

APPLN. TYPE	SMALL ENTITY	ISSUE FEE DUE	PUBLICATION FEE DUE	PREV. PAID ISSUE FEE	TOTAL FEE(S) DUE	DATE DUE
nonprovisional	YES	$870	$300	$0	$1170	12/29/2011

THE APPLICATION IDENTIFIED ABOVE HAS BEEN EXAMINED AND IS ALLOWED FOR ISSUANCE AS A PATENT. PROSECUTION ON THE MERITS IS CLOSED. THIS NOTICE OF ALLOWANCE IS NOT A GRANT OF PATENT RIGHTS. THIS APPLICATION IS SUBJECT TO WITHDRAWAL FROM ISSUE AT THE INITIATIVE OF THE OFFICE OR UPON PETITION BY THE APPLICANT. SEE 37 CFR 1.313 AND MPEP 1308.

THE ISSUE FEE AND PUBLICATION FEE (IF REQUIRED) MUST BE PAID WITHIN THREE MONTHS FROM THE MAILING DATE OF THIS NOTICE OR THIS APPLICATION SHALL BE REGARDED AS ABANDONED. THIS STATUTORY PERIOD CANNOT BE EXTENDED. SEE 35 U.S.C. 151. THE ISSUE FEE DUE INDICATED ABOVE DOES NOT REFLECT A CREDIT FOR ANY PREVIOUSLY PAID ISSUE FEE IN THIS APPLICATION. IF AN ISSUE FEE HAS PREVIOUSLY BEEN PAID IN THIS APPLICATION (AS SHOWN ABOVE), THE RETURN OF PART B OF THIS FORM WILL BE CONSIDERED A REQUEST TO REAPPLY THE PREVIOUSLY PAID ISSUE FEE TOWARD THE ISSUE FEE NOW DUE.

HOW TO REPLY TO THIS NOTICE:

I. Review the SMALL ENTITY status shown above.

If the SMALL ENTITY is shown as YES, verify your current SMALL ENTITY status:

A. If the status is the same, pay the TOTAL FEE(S) DUE shown above.

B. If the status above is to be removed, check box 5b on Part B - Fee(s) Transmittal and pay the PUBLICATION FEE (if required) and twice the amount of the ISSUE FEE shown above, or

If the SMALL ENTITY is shown as NO:

A. Pay TOTAL FEE(S) DUE shown above, or

B. If applicant claimed SMALL ENTITY status before, or is now claiming SMALL ENTITY status, check box 5a on Part B - Fee(s) Transmittal and pay the PUBLICATION FEE (if required) and 1/2 the ISSUE FEE shown above.

II. PART B - FEE(S) TRANSMITTAL, or its equivalent, must be completed and returned to the United States Patent and Trademark Office (USPTO) with your ISSUE FEE and PUBLICATION FEE (if required). If you are charging the fee(s) to your deposit account, section "4b" of Part B - Fee(s) Transmittal should be completed and an extra copy of the form should be submitted. If an equivalent of Part B is filed, a request to reapply a previously paid issue fee must be clearly made, and delays in processing may occur due to the difficulty in recognizing the paper as an equivalent of Part B.

III. All communications regarding this application must give the application number. Please direct all communications prior to issuance to Mail Stop ISSUE FEE unless advised to the contrary.

IMPORTANT REMINDER: Utility patents issuing on applications filed on or after Dec. 12, 1980 may require payment of maintenance fees. It is patentee's responsibility to ensure timely payment of maintenance fees when due.

PART B - FEE(S) TRANSMITTAL

Complete and send this form, together with applicable fee(s), to: Mail **Mail Stop ISSUE FEE**
Commissioner for Patents
P.O. Box 1450
Alexandria, Virginia 22313-1450
or Fax (571)-273-2885

INSTRUCTIONS: This form should be used for transmitting the ISSUE FEE and PUBLICATION FEE (if required). Blocks 1 through 5 should be completed where appropriate. All further correspondence including the Patent, advance orders and notification of maintenance fees will be mailed to the current correspondence address as indicated unless corrected below or directed otherwise in Block 1, by (a) specifying a new correspondence address; and/or (b) indicating a separate "FEE ADDRESS" for maintenance fee notifications.

CURRENT CORRESPONDENCE ADDRESS (Note: Use Block 1 for any change of address)

21005 7590 09/29/2011
HAMILTON, BROOK, SMITH & REYNOLDS, P.C.
530 VIRGINIA ROAD
P.O. BOX 9133
CONCORD, MA 01742-9133

Note: A certificate of mailing can only be used for domestic mailings of the Fee(s) Transmittal. This certificate cannot be used for any other accompanying papers. Each additional paper, such as an assignment or formal drawing, must have its own certificate of mailing or transmission.

Certificate of Mailing or Transmission

I hereby certify that this Fee(s) Transmittal is being deposited with the United States Postal Service with sufficient postage for first class mail in an envelope addressed to the Mail Stop ISSUE FEE address above, or being facsimile transmitted to the USPTO (571) 273-2885, on the date indicated below.

(Depositor's name)
(Signature)
(Date)

APPLICATION NO.	FILING DATE	FIRST NAMED INVENTOR	ATTORNEY DOCKET NO.	CONFIRMATION NO.
12/364,823	02/03/2009	James Arthur Proctor JR.	4394.1003-000	4791

TITLE OF INVENTION: VISUAL IDENTIFICATION INFORMATION USED AS CONFIRMATION IN A WIRELESS COMMUNICATION

APPLN. TYPE	SMALL ENTITY	ISSUE FEE DUE	PUBLICATION FEE DUE	PREV. PAID ISSUE FEE	TOTAL FEE(S) DUE	DATE DUE
nonprovisional	YES	$870	$300	$0	$1170	12/29/2011

EXAMINER	ART UNIT	CLASS-SUBCLASS
HAYLES, ASHFORD S	3687	705-021000

1. Change of correspondence address or indication of "Fee Address" (37 CFR 1.363).
- ❑ Change of correspondence address (or Change of Correspondence Address form PTO/SB/122) attached.
- ❑ "Fee Address" indication (or "Fee Address" Indication form PTO/SB/47; Rev 03-02 or more recent) attached. **Use of a Customer Number is required.**

2. For printing on the patent front page, list
(1) the names of up to 3 registered patent attorneys or agents OR, alternatively,
(2) the name of a single firm (having as a member a registered attorney or agent) and the names of up to 2 registered patent attorneys or agents. If no name is listed, no name will be printed.

1_____
2_____
3_____

3. ASSIGNEE NAME AND RESIDENCE DATA TO BE PRINTED ON THE PATENT (print or type)

PLEASE NOTE: Unless an assignee is identified below, no assignee data will appear on the patent. If an assignee is identified below, the document has been filed for recordation as set forth in 37 CFR 3.11. Completion of this form is NOT a substitute for filing an assignment.

(A) NAME OF ASSIGNEE (B) RESIDENCE: (CITY and STATE OR COUNTRY)

Please check the appropriate assignee category or categories (will not be printed on the patent) : ❑ Individual ❑ Corporation or other private group entity ❑ Government

4a. The following fee(s) are submitted:
- ❑ Issue Fee
- ❑ Publication Fee (No small entity discount permitted)
- ❑ Advance Order - # of Copies _____

4b. Payment of Fee(s): **(Please first reapply any previously paid issue fee shown above)**
- ❑ A check is enclosed.
- ❑ Payment by credit card. Form PTO-2038 is attached.
- ❑ The Director is hereby authorized to charge the required fee(s), any deficiency, or credit any overpayment, to Deposit Account Number _____ (enclose an extra copy of this form).

5. **Change in Entity Status** (from status indicated above)
- ❑ a. Applicant claims SMALL ENTITY status. See 37 CFR 1.27.
- ❑ b. Applicant is no longer claiming SMALL ENTITY status. See 37 CFR 1.27(g)(2).

NOTE: The Issue Fee and Publication Fee (if required) will not be accepted from anyone other than the applicant; a registered attorney or agent; or the assignee or other party in interest as shown by the records of the United States Patent and Trademark Office.

Authorized Signature _____ Date _____

Typed or printed name _____ Registration No. _____

This collection of information is required by 37 CFR 1.311. The information is required to obtain or retain a benefit by the public which is to file (and by the USPTO to process) an application. Confidentiality is governed by 35 U.S.C. 122 and 37 CFR 1.14. This collection is estimated to take 12 minutes to complete, including gathering, preparing, and submitting the completed application form to the USPTO. Time will vary depending upon the individual case. Any comments on the amount of time you require to complete this form and/or suggestions for reducing this burden, should be sent to the Chief Information Officer, U.S. Patent and Trademark Office, U.S. Department of Commerce, P.O. Box 1450, Alexandria, Virginia 22313-1450. DO NOT SEND FEES OR COMPLETED FORMS TO THIS ADDRESS. SEND TO: Commissioner for Patents, P.O. Box 1450, Alexandria, Virginia 22313-1450.

Under the Paperwork Reduction Act of 1995, no persons are required to respond to a collection of information unless it displays a valid OMB control number.

UNITED STATES PATENT AND TRADEMARK OFFICE

UNITED STATES DEPARTMENT OF COMMERCE
United States Patent and Trademark Office
Address: COMMISSIONER FOR PATENTS
P.O. Box 1450
Alexandria, Virginia 22313-1450
www.uspto.gov

APPLICATION NO.	FILING DATE	FIRST NAMED INVENTOR	ATTORNEY DOCKET NO.	CONFIRMATION NO.
12/364,823	02/03/2009	James Arthur Proctor JR.	4394.1003-000	4791

21005 7590 09/29/2011
HAMILTON, BROOK, SMITH & REYNOLDS, P.C.
530 VIRGINIA ROAD
P.O. BOX 9133
CONCORD, MA 01742-9133

EXAMINER
HAYLES, ASHFORD S

ART UNIT	PAPER NUMBER
3687	

DATE MAILED: 09/29/2011

Determination of Patent Term Adjustment under 35 U.S.C. 154 (b)
(application filed on or after May 29, 2000)

The Patent Term Adjustment to date is 142 day(s). If the issue fee is paid on the date that is three months after the mailing date of this notice and the patent issues on the Tuesday before the date that is 28 weeks (six and a half months) after the mailing date of this notice, the Patent Term Adjustment will be 142 day(s).

If a Continued Prosecution Application (CPA) was filed in the above-identified application, the filing date that determines Patent Term Adjustment is the filing date of the most recent CPA.

Applicant will be able to obtain more detailed information by accessing the Patent Application Information Retrieval (PAIR) WEB site (http://pair.uspto.gov).

Any questions regarding the Patent Term Extension or Adjustment determination should be directed to the Office of Patent Legal Administration at (571)-272-7702. Questions relating to issue and publication fee payments should be directed to the Customer Service Center of the Office of Patent Publication at 1-(888)-786-0101 or (571)-272-4200.

PTOL-85 (Rev. 02/11)

Privacy Act Statement

The Privacy Act of 1974 (P.L. 93-579) requires that you be given certain information in connection with your submission of the attached form related to a patent application or patent. Accordingly, pursuant to the requirements of the Act, please be advised that: (1) the general authority for the collection of this information is 35 U.S.C. 2(b)(2); (2) furnishing of the information solicited is voluntary; and (3) the principal purpose for which the information is used by the U.S. Patent and Trademark Office is to process and/or examine your submission related to a patent application or patent. If you do not furnish the requested information, the U.S. Patent and Trademark Office may not be able to process and/or examine your submission, which may result in termination of proceedings or abandonment of the application or expiration of the patent.

The information provided by you in this form will be subject to the following routine uses:

1. The information on this form will be treated confidentially to the extent allowed under the Freedom of Information Act (5 U.S.C. 552) and the Privacy Act (5 U.S.C 552a). Records from this system of records may be disclosed to the Department of Justice to determine whether disclosure of these records is required by the Freedom of Information Act.
2. A record from this system of records may be disclosed, as a routine use, in the course of presenting evidence to a court, magistrate, or administrative tribunal, including disclosures to opposing counsel in the course of settlement negotiations.
3. A record in this system of records may be disclosed, as a routine use, to a Member of Congress submitting a request involving an individual, to whom the record pertains, when the individual has requested assistance from the Member with respect to the subject matter of the record.
4. A record in this system of records may be disclosed, as a routine use, to a contractor of the Agency having need for the information in order to perform a contract. Recipients of information shall be required to comply with the requirements of the Privacy Act of 1974, as amended, pursuant to 5 U.S.C. 552a(m).
5. A record related to an International Application filed under the Patent Cooperation Treaty in this system of records may be disclosed, as a routine use, to the International Bureau of the World Intellectual Property Organization, pursuant to the Patent Cooperation Treaty.
6. A record in this system of records may be disclosed, as a routine use, to another federal agency for purposes of National Security review (35 U.S.C. 181) and for review pursuant to the Atomic Energy Act (42 U.S.C. 218(c)).
7. A record from this system of records may be disclosed, as a routine use, to the Administrator, General Services, or his/her designee, during an inspection of records conducted by GSA as part of that agency's responsibility to recommend improvements in records management practices and programs, under authority of 44 U.S.C. 2904 and 2906. Such disclosure shall be made in accordance with the GSA regulations governing inspection of records for this purpose, and any other relevant (i.e., GSA or Commerce) directive. Such disclosure shall not be used to make determinations about individuals.
8. A record from this system of records may be disclosed, as a routine use, to the public after either publication of the application pursuant to 35 U.S.C. 122(b) or issuance of a patent pursuant to 35 U.S.C. 151. Further, a record may be disclosed, subject to the limitations of 37 CFR 1.14, as a routine use, to the public if the record was filed in an application which became abandoned or in which the proceedings were terminated and which application is referenced by either a published application, an application open to public inspection or an issued patent.
9. A record from this system of records may be disclosed, as a routine use, to a Federal, State, or local law enforcement agency, if the USPTO becomes aware of a violation or potential violation of law or regulation.

Notice of Allowability	Application No.	Applicant(s)	
	12/364,823	PROCTOR ET AL.	
	Examiner	Art Unit	
	ASHFORD S. HAYLES	3687	

-- The MAILING DATE of this communication appears on the cover sheet with the correspondence address--

All claims being allowable, PROSECUTION ON THE MERITS IS (OR REMAINS) CLOSED in this application. If not included herewith (or previously mailed), a Notice of Allowance (PTOL-85) or other appropriate communication will be mailed in due course. **THIS NOTICE OF ALLOWABILITY IS NOT A GRANT OF PATENT RIGHTS.** This application is subject to withdrawal from issue at the initiative of the Office or upon petition by the applicant. See 37 CFR 1.313 and MPEP 1308.

1. ☒ This communication is responsive to *03/23/2011*.

2. ☒ The allowed claim(s) is/are *1-14,16 and 21-34*.

3. ☐ Acknowledgment is made of a claim for foreign priority under 35 U.S.C. § 119(a)-(d) or (f).
   a) ☐ All b) ☐ Some* c) ☐ None of the:
      1. ☐ Certified copies of the priority documents have been received.
      2. ☐ Certified copies of the priority documents have been received in Application No. _____ .
      3. ☐ Copies of the certified copies of the priority documents have been received in this national stage application from the International Bureau (PCT Rule 17.2(a)).

   * Certified copies not received: _____.

Applicant has THREE MONTHS FROM THE "MAILING DATE" of this communication to file a reply complying with the requirements noted below. Failure to timely comply will result in ABANDONMENT of this application.
THIS THREE-MONTH PERIOD IS NOT EXTENDABLE.

4. ☐ A SUBSTITUTE OATH OR DECLARATION must be submitted. Note the attached EXAMINER'S AMENDMENT or NOTICE OF INFORMAL PATENT APPLICATION (PTO-152) which gives reason(s) why the oath or declaration is deficient.

5. ☐ CORRECTED DRAWINGS (as "replacement sheets") must be submitted.
   (a) ☐ including changes required by the Notice of Draftsperson's Patent Drawing Review (PTO-948) attached
      1) ☐ hereto or 2) ☐ to Paper No./Mail Date _____.
   (b) ☐ including changes required by the attached Examiner's Amendment / Comment or in the Office action of Paper No./Mail Date _____.

   Identifying indicia such as the application number (see 37 CFR 1.84(c)) should be written on the drawings in the front (not the back) of each sheet. Replacement sheet(s) should be labeled as such in the header according to 37 CFR 1.121(d).

6. ☐ DEPOSIT OF and/or INFORMATION about the deposit of BIOLOGICAL MATERIAL must be submitted. Note the attached Examiner's comment regarding REQUIREMENT FOR THE DEPOSIT OF BIOLOGICAL MATERIAL.

Attachment(s)

1. ☒ Notice of References Cited (PTO-892)
2. ☐ Notice of Draftperson's Patent Drawing Review (PTO-948)
3. ☒ Information Disclosure Statements (PTO/SB/08), Paper No./Mail Date 4/15/2011
4. ☐ Examiner's Comment Regarding Requirement for Deposit of Biological Material
5. ☐ Notice of Informal Patent Application
6. ☐ Interview Summary (PTO-413), Paper No./Mail Date _____ .
7. ☐ Examiner's Amendment/Comment
8. ☒ Examiner's Statement of Reasons for Allowance
9. ☐ Other _____.

/A. S. H./ Examiner, Art Unit 3687	/Matthew S Gart/ Supervisory Patent Examiner, Art Unit 3687

DETAILED ACTION

EXAMINER'S AMENDMENT

An examiner's amendment to the record appears below. Should the changes and/or additions be unacceptable to applicant, an amendment may be filed as provided by 37 CFR 1.312. To ensure consideration of such an amendment, it MUST be submitted no later than the payment of the issue fee.

The application has been amended as follows:

Claims 17-20 are cancelled.

REASONS FOR ALLOWANCE

Regarding Independent Claims 1, 8 and 27

Claim 1 recites a method for operating a first wireless device the first wireless device communicating using two different wireless communication protocols, such that a first wireless protocol is used to receive identifiers from other wireless devices, and such that a second wireless protocol, different from the first wireless protocol, is used to communicate with a trusted server to confirm an identity of an object or entity associated with one of the other wireless devices, the method comprising the steps of:

receiving an identifier from a second wireless device using the [[a]] first wireless protocol, the identifier relating to an object or entity associated with the second wireless device;

connecting to [[a]] the trusted server using [[a]] the second wireless protocol;

sending the received identifier from the first wireless device to the trusted server using the second wireless protocol; [[and]]

receiving visual identification information from the trusted server also using the second wireless protocol, the visual identification information also associated with the entity or object associated with the second wireless device, wherein the visual identification information additionally includes at least an identifying picture of the object or entity associated with the second wireless device;

displaying, on the first wireless device, the identifying picture of the object or entity associated with the second wireless device;

receiving user input indicating a user of the first wireless device has compared the identifying picture to the object or entity associated with the second wireless device and the user considering them to match; and

confirming, to the trusted server, verification of the identity of the object or entity associated with the second wireless device.

Claim 8 recites a first wireless communication device communicating with two different wireless communication protocols, such that a first wireless protocol is used to receive identifiers from other wireless devices, and such that a second wireless protocol, different from a first wireless protocol, is used to communicate with a trusted server to confirm an identity of an object or entity associated with one of the other wireless devices, the first wireless communication device further comprising:

a first receiver, for receiving an identifier from a second wireless device using [[a]] the first wireless protocol, the identifier relating to an object or entity associated with the second wireless device;

a server transmitter, for sending the received identifier from the first wireless device to [[a]] the trusted server using [[a]] the second wireless protocol; [[and]]

a server receiver, for receiving visual identification information from the trusted server using the second wireless protocol, the visual identification information associated with [[an]] the entity or object associated with the second wireless device,

wherein the further information additionally includes a visual identification at least an identifying picture of the object or entity associated with the second wireless device;

a display, for displaying on the first wireless device the identifying picture of the object or entity associated with the second wireless device;

a user input device, for receiving user input from a user of the first wireless device indicating that the user has compared the identifying picture with the object or entity associated with the second wireless device and considers them to match; and

wherein the server transmitter then confirms, to the trusted server, verification of the identity of the object or entity associated with the second wireless device.

Claim 27 recites a method for operating a first wireless communication device, the first wireless device communicating using two different wireless communication protocols, such that a first wireless protocol is used to receive identifiers from other wireless devices, and such that a second wireless protocol, different from the first wireless protocol, is used to communicate with a trusted server to confirm an identity of an object or entity associated with one of the other wireless devices, the method comprising the steps of

scanning for identifiers received from a plurality of other wireless devices using the first wireless protocol, the identifiers relating to an object or entity associated with the other wireless devices;

connecting to a trusted server using the second wireless protocol;

sending a plurality of the received identifiers from the first wireless device to the trusted server using the second wireless protocol;

receiving visual identification information from the trusted server also using the second wireless protocol, the visual identification information also associated with the plurality of entities or objects associated with the other wireless devices, wherein the visual identification information additionally includes at least an identifying picture of the object or entity associated with each of the plurality of other wireless devices;

displaying, on the first wireless device, a plurality of the identifying pictures of the objects or entities associated with the other wireless devices;

receiving user input indicating a user of the first wireless device has compared at least one of the identifying pictures with an object or entity associated with a selected one of the other wireless devices and that they match; and

confirming, to the trusted server, verification of the identity of the object or entity associated with the selected one of the other wireless devices.

The most remarkable prior arts on record is to Hammand (PG PUB. 2009/0271211) and Van Bosch et al. (PG PUB. 2008/0313079). Hammand is directed to receiving, at a server computer, an authorization request message comprising user exclusive data in a user exclusive data tag, wherein the user exclusive data was previously stored in a consumer device, analyzing the authorization request message and performing additional processing based on the user exclusive data. Hammand, *pg.1, ¶ [0007]*. Van Bosch et al. is directed to a method for proximity payment

provisioning by a wireless communication device, where a photo image of a user of the wireless communication device is loaded. The loaded photo image is transmitted to a trusted party via a communication network. A superimposed photo image is received from the trusted party, wherein the photo image is superimposed with a watermark. Van Bosch et al., *Abstract*.

Hammand nor Van Bosch et al. teach the structural limitations of the claimed invention, receiving an identifier from a second wireless device using the first wireless protocol, the identifier relating to an object or entity associated with the second wireless device connecting to the trusted server using the second wireless protocol, sending the received identifier from the first wireless device to the trusted server using the second wireless protocol, receiving visual identification information from the trusted server also using the second wireless protocol, the visual identification information also associated with the entity or object associated with the second wireless device, wherein the visual identification information additionally includes at least an identifying picture of the object or entity associated with the second wireless device and scanning for identifiers received from a plurality of other wireless devices using the first wireless protocol, the identifiers relating to an object or entity associated with the other wireless devices.

Moreover, none of the prior art of record remedies the deficiencies found in Hammand and Van Bosch et al. or could be combined with any other reference to produce the claimed invention.

Drawings

The drawings were received on September 13, 2011. These drawings are sufficient.

Information Disclosure Statement

The information disclosure statement (IDS) submitted on April 15, 2011 was filed after the mailing date of the Final Rejection on December 28, 2009. The submission is in compliance with the provisions of 37 CFR 1.97. Accordingly, the information disclosure statement is being considered by the examiner.

Conclusion

The prior art made of record and not relied upon is considered pertinent to applicant's disclosure.

Geddes, U.S. Patent #7,207,480, April 24, 2007, discloses a certified digital photo authentication system.

Walley et al., Patent Granted Publication, 2009/0022096, January 22, 2009, discloses a method and system for environment configuration by a device based on auto-discovery of local resources and generating preference information for those resources.

Any inquiry concerning this communication or earlier communications from the examiner should be directed to ASHFORD S. HAYLES whose telephone number is

(571)270-5106. The examiner can normally be reached on Monday - Friday 8:00 A.M.-5:00 P.M..

If attempts to reach the examiner by telephone are unsuccessful, the examiner's supervisor, Matthew S. Gart can be reached on 571-272-3955. The fax phone number for the organization where this application or proceeding is assigned is 571-273-8300.

Information regarding the status of an application may be obtained from the Patent Application Information Retrieval (PAIR) system. Status information for published applications may be obtained from either Private PAIR or Public PAIR. Status information for unpublished applications is available through Private PAIR only. For more information about the PAIR system, see http://pair-direct.uspto.gov. Should you have questions on access to the Private PAIR system, contact the Electronic Business Center (EBC) at 866-217-9197 (toll-free). If you would like assistance from a USPTO Customer Service Representative or access to the automated information system, call 800-786-9199 (IN USA OR CANADA) or 571-272-1000.

/A. S. H./
Examiner, Art Unit 3687

/Matthew S Gart/
Supervisory Patent Examiner, Art Unit 3687

Notice of References Cited	Application/Control No. 12/364,823	Applicant(s)/Patent Under Reexamination PROCTOR ET AL.	
	Examiner ASHFORD S. HAYLES	Art Unit 3687	Page 1 of 2

U.S. PATENT DOCUMENTS

*		Document Number Country Code-Number-Kind Code	Date MM-YYYY	Name	Classification
*	A	US-2002/0073027 A1	06-2002	Hui et al.	705/40
*	B	US-2002/0128932 A1	09-2002	Yung et al.	705/27
*	C	US-2004/0030601 A1	02-2004	Pond et al.	705/16
*	D	US-2006/0069922 A1	03-2006	Jelinek et al.	713/186
*	E	US-7,207,480 B1	04-2007	Geddes, Martin	235/380
*	F	US-2007/0187491 A1	08-2007	Godwin et al.	235/380
*	G	US-2008/0313079 A1	12-2008	VAN BOSCH et al.	705/44
*	H	US-2008/0313082 A1	12-2008	VAN BOSCH et al.	705/50
*	I	US-2009/0022096 A1	01-2009	Walley et al.	370/329
*	J	US-2009/0177530 A1	07-2009	KING et al.	705/10
*	K	US-2009/0170559 A1	07-2009	Phillips, Simon	455/556.1
*	L	US-2009/0271211 A1	10-2009	Hammad, Ayman	705/1
*	M	US-2009/0282130 A1	11-2009	ANTONIOU et al.	709/220

FOREIGN PATENT DOCUMENTS

*		Document Number Country Code-Number-Kind Code	Date MM-YYYY	Country	Name	Classification
	N					
	O					
	P					
	Q					
	R					
	S					
	T					

NON-PATENT DOCUMENTS

*		Include as applicable: Author, Title Date, Publisher, Edition or Volume, Pertinent Pages)
	U	
	V	
	W	
	X	

*A copy of this reference is not being furnished with this Office action. (See MPEP § 707.05(a).)
Dates in MM-YYYY format are publication dates. Classifications may be US or foreign.

Notice of References Cited	Application/Control No. 12/364,823	Applicant(s)/Patent Under Reexamination PROCTOR ET AL.	
	Examiner ASHFORD S. HAYLES	Art Unit 3687	Page 2 of 2

U.S. PATENT DOCUMENTS

*		Document Number Country Code-Number-Kind Code	Date MM-YYYY	Name	Classification
*	A	US-2009/0303250 A1	12-2009	Phillips, Simon	345/619
*	B	US-2009/0307132 A1	12-2009	Phillips, Simon	705/41
*	C	US-2010/0030651 A1	02-2010	Matotek et al.	705/17
*	D	US-2010/0051685 A1	03-2010	Royyuru et al.	235/379
	E	US-			
	F	US-			
	G	US-			
	H	US-			
	I	US-			
	J	US-			
	K	US-			
	L	US-			
	M	US-			

FOREIGN PATENT DOCUMENTS

*		Document Number Country Code-Number-Kind Code	Date MM-YYYY	Country	Name	Classification
	N					
	O					
	P					
	Q					
	R					
	S					
	T					

NON-PATENT DOCUMENTS

*		Include as applicable: Author, Title Date, Publisher, Edition or Volume, Pertinent Pages)
	U	
	V	
	W	
	X	

*A copy of this reference is not being furnished with this Office action. (See MPEP § 707.05(a).)
Dates in MM-YYYY format are publication dates. Classifications may be US or foreign.

UNITED STATES PATENT AND TRADEMARK OFFICE

UNITED STATES DEPARTMENT OF COMMERCE
United States Patent and Trademark Office
Address: COMMISSIONER FOR PATENTS
P.O. Box 1450
Alexandria, Virginia 22313-1450
www.uspto.gov

BIB DATA SHEET

CONFIRMATION NO. 4791

SERIAL NUMBER	FILING or 371(c) DATE	CLASS	GROUP ART UNIT	ATTORNEY DOCKET NO.
12/364,823	02/03/2009 **RULE**	705	3687	4394.1003-000

APPLICANTS

James Arthur Proctor JR., Melbourne Beach, FL;
James Arthur Proctor III, Indialantic, FL;

**** CONTINUING DATA ***************************

This appln claims benefit of 61/095,001 09/08/2008
and claims benefit of 61/095,359 09/09/2008

**** FOREIGN APPLICATIONS ****************************

**** IF REQUIRED, FOREIGN FILING LICENSE GRANTED **** ** SMALL ENTITY **
02/13/2009

Foreign Priority claimed	☐ Yes ☑ No		STATE OR COUNTRY	SHEETS DRAWINGS	TOTAL CLAIMS	INDEPENDENT CLAIMS
35 USC 119(a-d) conditions met	☐ Yes ☑ No	☐ Met after Allowance	FL	14	14	2
Verified and Acknowledged	/ASHFORD S HAYLES/ Examiner's Signature	ASH Initials				

ADDRESS

HAMILTON, BROOK, SMITH & REYNOLDS, P.C.
530 VIRGINIA ROAD
P.O. BOX 9133
CONCORD, MA 01742-9133
UNITED STATES

TITLE

VISUAL IDENTIFICATION INFORMATION USED AS CONFIRMATION IN A WIRELESS COMMUNICATION

FILING FEE RECEIVED		
910	FEES: Authority has been given in Paper No._____ to charge/credit DEPOSIT ACCOUNT No._____ for following:	☐ All Fees ☐ 1.16 Fees (Filing) ☐ 1.17 Fees (Processing Ext. of time) ☐ 1.18 Fees (Issue) ☐ Other _____ ☐ Credit

Substitute for form 1449B/PTO **SUPPLEMENTAL INFORMATION DISCLOSURE STATEMENT IN AN APPLICATION** **LISTING OF REFERENCES** **(April 14, 2011)** (Use several sheets if necessary)	ATTORNEY DOCKET NO. 4394.1003-000		APPLICATION NO. 12/364,823
	FIRST NAMED INVENTOR James Arthur Proctor, Jr.		FILING DATE February 3, 2009
	EXAMINER Hayles, Ashford S.	CONFIRMATION NO. 4791	GROUP 3687

U.S. PATENT DOCUMENTS

Examiner's Initials	Ref. No.	DOCUMENT NUMBER Number-Kind Code (if known)	ISSUE DATE / PUBLICATION DATE MM-DD-YYYY	NAME OF PATENTEE OR APPLICANT OF CITED DOCUMENT
/A.H./	A35	7,876,701 B2	01-25-2011	Li, *et al.*
	A36	2009/0325601 A1	12-31-2009	Park, *et al.*
	A37	2009/0323648 A1	12-31-2009	Park, *et al.*
	A38	2009/0323647 A1	12-31-2009	Park, *et al.*
	A39	2009/0310517 A1	12-17-2009	Narayanan, *et al.*
	A40	2009/0287827 A1	11-19-2009	Horn, *et al.*
	A41	2009/0285119 A1	11-19-2009	Horn, *et al.*
	A42	2009/0270120 A1	10-29-2009	Park
	A43	2009/0019168 A1	01-15-2009	Wu, *et al.*
	A44	2009/0016524 A1	01-15-2009	Park, *et al.*
	A45	2009/0016353 A1	01-15-2009	Li, *et al.*
	A46	2009/0016315 A1	01-15-2009	Laroia, *et al.*
	A47	2009/0016255 A1	01-15-2009	Park
	A48	2009/0016250 A1	01-15-2009	Li, *et al.*
	A49	2009/0016248 A1	01-15-2009	Li, *et al.*
	A50	2008/0037487 A1	02-14-2008	Li, *et al.*
	A51	2007/0242765 A1	10-18-2007	Parizhisky, *et al.*

Copies of issued U.S. Patents and Published U.S. Applications are not required and are not being provided. We are not listing separately any prior U.S. Patent Office communications regarding the cited documents because the Examiner has access to any such actions through PAIR.

EXAMINER /Ashford Hayles/	DATE CONSIDERED 08/09/2011

ALL REFERENCES CONSIDERED EXCEPT WHERE LINED THROUGH. /A.H./

Substitute for form 1449B/PTO **SUPPLEMENTAL INFORMATION DISCLOSURE STATEMENT IN AN APPLICATION** **LISTING OF REFERENCES** **(April 14, 2011)** (Use several sheets if necessary)	ATTORNEY DOCKET NO. 4394.1003-000		APPLICATION NO. 12/364,823
	FIRST NAMED INVENTOR James Arthur Proctor, Jr.		FILING DATE February 3, 2009
	EXAMINER Hayles, Ashford S.	CONFIRMATION NO. 4791	GROUP 3687

Examiner's Initials	Ref. No.	**OTHER DOCUMENTS** *(Including Author, Title, Date, Pertinent Pages, Etc.)*
/A.H./	C4	Office Action; U.S. Application No. 12/364,828; Date of Mailing: September 15, 2010. *
	C5	Office Action; U.S. Application No. 12/364,938; Date of Mailing: September 14, 2010. *
	C6	Office Action; U.S. Application No. 12/364,819; Date of Mailing: November 15, 2010. *
	C7	Provisional Application No. 60/758,010 filed January 11, 2006.*
	C8	Provisional Application No. 60/758,011 filed January 11, 2006.*
	C9	Provisional Application No. 60/758,012 filed January 11, 2006.*
	C10	Provisional Application No. 60/845,051 filed September 15, 2006.*
	C11	Provisional Application No. 60/845,052 filed September 15, 2006.*
	C12	Provisional Application No. 60/863,304 filed October 27, 2006.*

***Copies of any U.S. Office Communications or non-published U.S. Patent Applications are not being provided because the examiner has access to such documents through PAIR. We are not listing separately any prior U.S. Patent Office communications regarding the cited documents because the Examiner has access to any such actions through PAIR.**

EXAMINER	DATE CONSIDERED
/Ashford Hayles/	08/09/2011

ALL REFERENCES CONSIDERED EXCEPT WHERE LINED THROUGH. /A.H./

Issue Classification	Application/Control No.	Applicant(s)/Patent Under Reexamination
	12364823	PROCTOR ET AL.
	Examiner	**Art Unit**
	ASHFORD S HAYLES	3687

ORIGINAL		INTERNATIONAL CLASSIFICATION									
CLASS	SUBCLASS	CLAIMED					NON-CLAIMED				
705	21	G	0	6	G	1 / 12 (2006.01.01)					
CROSS REFERENCE(S)		H	0	4	W	4 / 00 (2009.01.01)					
CLASS	SUBCLASS (ONE SUBCLASS PER BLOCK)										
370	329										

☐ Claims renumbered in the same order as presented by applicant ☐ CPA ☐ T.D. ☐ R.1.47

Final	Original	Final	Original	Final	Original	Final	Original	Final	Original	Final	Original	Final	Original	Final	Original
1	1		17	28	33										
2	2		18	29	34										
3	3		19												
4	4		20												
5	5	16	21												
6	6	17	22												
7	7	18	23												
8	8	19	24												
9	9	20	25												
10	10	21	26												
11	11	22	27												
12	12	23	28												
13	13	24	29												
14	14	25	30												
	15	26	31												
15	16	27	32												

/A.S.H./ Examiner.Art Unit 3687 (Assistant Examiner)	08/09/2011 (Date)	**Total Claims Allowed:** 29	
/MATTHEW GART/ Supervisory Patent Examiner.Art Unit 3687 (Primary Examiner)	08/15/2011 (Date)	O.G. Print Claim(s) 1	O.G. Print Figure 2

U.S. Patent and Trademark Office Part of Paper No. 20110809

EAST Search History

EAST Search History (Prior Art)

Ref #	Hits	Search Query	DBs	Default Operator	Plurals	Time Stamp
L1	0	multiple near wireless near payment near protocol	US-PGPUB; USPAT; USOCR; FPRS; EPO; JPO; DERWENT; IBM_TDB	OR	ON	2011/08/09 20:08
L2	181	multiple near wireless near protocol	US-PGPUB; USPAT; USOCR; FPRS; EPO; JPO; DERWENT; IBM_TDB	OR	ON	2011/08/09 20:08
L3	38	2 and (payment or transaction)	US-PGPUB; USPAT; USOCR; FPRS; EPO; JPO; DERWENT; IBM_TDB	OR	ON	2011/08/09 20:08
L4	0	3 and (visual or image) near (identification or recognition)	US-PGPUB; USPAT; USOCR; FPRS; EPO; JPO; DERWENT; IBM_TDB	OR	ON	2011/08/09 20:12
L5	5	3 and (visual or image) near (identification or recognition or ID)	US-PGPUB; USPAT; USOCR; FPRS; EPO; JPO; DERWENT; IBM_TDB	OR	ON	2011/08/09 20:12
L6	0	3 and (visual or image) near (compar$4 or match $4)	US-PGPUB; USPAT; USOCR; FPRS; EPO; JPO; DERWENT; IBM_TDB	OR	ON	2011/08/09 20:13
L9	7	"7,207,480"	US-PGPUB; USPAT; USOCR; FPRS; EPO; JPO; DERWENT; IBM_TDB	OR	ON	2011/08/09 20:25

L14	36490	"10" and (visual or image) near (identification or recognition)	US-PGPUB; USPAT; USOCR; FPRS; EPO; JPO; DERWENT; IBM_TDB	OR	ON	2011/08/09 20:38
S1	4652	(payment or transaction) with (user adj input)	US-PGPUB; USPAT; USOCR; FPRS; EPO; JPO; DERWENT; IBM_TDB	OR	ON	2010/05/31 15:05
S2	14	(wireless or contactless) near(payment or transaction) with (user adj input)	US-PGPUB; USPAT; USOCR; FPRS; EPO; JPO; DERWENT; IBM_TDB	OR	ON	2010/05/31 15:05
S3	89	("20020073027" | "20020188565" | "20030045272" | "20040030601" | "20040190468" | "20040264466" | "20060069922" | "20060079284" | "20060085419" | "20070106612" | "20070178886" | "20080010190" | "20080097851" | "20080109741" | "20080114699" | "20080133403" | "20080167961" | "20080181154" | "20080182591" | "20080182592" | "20080189394" | "20080222711" | "20090037286" | "20090177530" | "20090281904" | "20090313105" | "6487601" | "7177594" | "7185204" | "7233960" | "7280847" | "7305245" | "7315944" | "7349871" | "7403762" | "7414988" | "7433649" | "7433694" | "7434723").PN.	US-PGPUB; USPAT; USOCR; FPRS; EPO; JPO; DERWENT; IBM_TDB	OR	ON	2010/05/31 15:12

S4	2	("20080313079").PN.	US-PGPUB; USPAT; USOCR; FPRS; EPO; JPO; DERWENT; IBM_TDB	OR	OFF	2010/05/31 17:19
S5	1003	705/21	US-PGPUB; USPAT; USOCR; FPRS; EPO; JPO; DERWENT; IBM_TDB	OR	ON	2010/05/31 17:29
S6	35	S5 and (wireless or contactless) near (payment or transaction)	US-PGPUB; USPAT; USOCR; FPRS; EPO; JPO; DERWENT; IBM_TDB	OR	ON	2010/05/31 17:29
S7	25	S6 and (photo or image or picture or graphic or still)	US-PGPUB; USPAT; USOCR; FPRS; EPO; JPO; DERWENT; IBM_TDB	OR	ON	2010/05/31 17:29
S8	2	S6 and (photo or image or picture or graphic or still) near (item or product)	US-PGPUB; USPAT; USOCR; FPRS; EPO; JPO; DERWENT; IBM_TDB	OR	ON	2010/05/31 17:30
S9	47	S5 and (wireless or mobile) near (payment or transaction)	US-PGPUB; USPAT; USOCR; FPRS; EPO; JPO; DERWENT; IBM_TDB	OR	ON	2010/05/31 17:30
S10	2	S9 and (photo or image or picture or graphic or still) near (item or product)	US-PGPUB; USPAT; USOCR; FPRS; EPO; JPO; DERWENT; IBM_TDB	OR	ON	2010/05/31 17:30
S11	34	S9 and (photo or image or picture or graphic or still)	US-PGPUB; USPAT; USOCR; FPRS; EPO; JPO; DERWENT; IBM_TDB	OR	ON	2010/05/31 17:30

S12	30	S11 and (list or receipt)	US-PGPUB; USPAT; USOCR; FPRS; EPO; JPO; DERWENT; IBM_TDB	OR	ON	2010/05/31 17:31
S13	30	S12 and (authoriz$5 or confirm$5 or verifi$6)	US-PGPUB; USPAT; USOCR; FPRS; EPO; JPO; DERWENT; IBM_TDB	OR	ON	2010/05/31 17:31
S14	4	S13 and "peer-to-peer"	US-PGPUB; USPAT; USOCR; FPRS; EPO; JPO; DERWENT; IBM_TDB	OR	ON	2010/05/31 17:32
S15	2	S13 and "NFC"	US-PGPUB; USPAT; USOCR; FPRS; EPO; JPO; DERWENT; IBM_TDB	OR	ON	2010/05/31 17:32
S16	0	S13 and visual near ID	US-PGPUB; USPAT; USOCR; FPRS; EPO; JPO; DERWENT; IBM_TDB	OR	ON	2010/05/31 17:33
S17	2	("20090271211").PN.	US-PGPUB; USPAT; USOCR; FPRS; EPO; JPO; DERWENT; IBM_TDB	OR	OFF	2010/06/07 09:31
S18	31	vending adj machine with wireless near (purchase or transaction)	US-PGPUB; USPAT; USOCR; FPRS; EPO; JPO; DERWENT; IBM_TDB	OR	ON	2010/12/07 13:38
S19	0	vending adj machine with wireless near (purchase or transaction) with image	US-PGPUB; USPAT; USOCR; FPRS; EPO; JPO; DERWENT; IBM_TDB	OR	ON	2010/12/07 13:40

S20	1	vending adj machine with wireless near (purchase or transaction) and image	US-PGPUB; USPAT; USOCR; FPRS; EPO; JPO; DERWENT; IBM_TDB	OR	ON	2010/12/07 13:40
S21	23	proximity with wireless near (purchase or transaction)	US-PGPUB; USPAT; USOCR; FPRS; EPO; JPO; DERWENT; IBM_TDB	OR	ON	2010/12/07 13:45
S22	2	"20090271211"	US-PGPUB; USPAT; USOCR; FPRS; EPO; JPO; DERWENT; IBM_TDB	OR	ON	2010/12/07 14:31

EAST Search History (Interference)

Ref #	Hits	Search Query	DBs	Default Operator	Plurals	Time Stamp
L10	979	705/21	USPAT; UPAD	OR	ON	2011/08/09 20:37
L11	0	10 and multiple near wireless near payment near protocol	USPAT; UPAD	OR	ON	2011/08/09 20:37
L12	0	10 and multiple near wireless near protocol	USPAT; UPAD	OR	ON	2011/08/09 20:37
L13	0	10 and "auto-discovery"	USPAT; UPAD	OR	ON	2011/08/09 20:38
L15	10	10 and (visual or image) near (identification or recognition)	USPAT; UPAD	OR	ON	2011/08/09 20:38
L16	0	15 and multiple near wireless near protocol	USPAT; UPAD	OR	ON	2011/08/09 20:38
L17	0	15 and (multiple near wireless near protocol)	USPAT; UPAD	OR	ON	2011/08/09 20:38
L18	0	15 and (wireless near protocol)	USPAT; UPAD	OR	ON	2011/08/09 20:38
L19	9902	370/329	USPAT; UPAD	OR	ON	2011/08/09 20:40
L20	0	19 and multiple near wireless near payment near protocol	USPAT; UPAD	OR	ON	2011/08/09 20:40
L21	10	19 and multiple near wireless near protocol	USPAT; UPAD	OR	ON	2011/08/09 20:40

L22	0	21 and (visual or image) near (identification or recognition)	USPAT; UPAD	OR	ON	2011/08/09 20:40
L23	10	21 and (wireless near protocol)	USPAT; UPAD	OR	ON	2011/08/09 20:40
L24	1	23 and (auto-discovery)	USPAT; UPAD	OR	ON	2011/08/09 20:41
L25	1	24 and (payment or transaction)	USPAT; UPAD	OR	ON	2011/08/09 20:43
L26	0	24 and wireless near (payment or transaction)	USPAT; UPAD	OR	ON	2011/08/09 20:43
L27	0	24 and (wireless near (payment or transaction))	USPAT; UPAD	OR	ON	2011/08/09 20:43

8/9/2011 8:43:54 PM
C:\Documents and Settings\ahayles\My Documents\EAST\Workspaces\12364823.wsp

Search Notes	Application/Control No.	Applicant(s)/Patent Under Reexamination
	12364823	PROCTOR ET AL.
	Examiner	**Art Unit**
	ASHFORD HAYLES	3687

SEARCHED

Class	Subclass	Date	Examiner
705	21	5/27/2010	AH
370	329	8/9/2011	AH

SEARCH NOTES

Search Notes	Date	Examiner
EAST (See Attachments)	5/27/2010	AH
Updated EAST (See Attachments)	12/7/2010	AH
Updated EAST (See Attachments)	8/9/2011	AH
Dialog QuickSearch	8/9/2011	AH

INTERFERENCE SEARCH

Class	Subclass	Date	Examiner
705	21	8/9/2011	AH
370	329	8/9/2011	AH

/A. H./ Examiner.Art Unit 3687	

PTO/SB/30EFS (07-09)
Approved for use through 07/31/2012. OMB 0651-0031
U.S. Patent and Trademark Office; U.S. DEPARTMENT OF COMMERCE
Under the Paperwork Reduction Act of 1995, no persons are required to respond to a collection of information unless it contains a valid OMB control number.

REQUEST FOR CONTINUED EXAMINATION(RCE)TRANSMITTAL
(Submitted Only via EFS-Web)

Application Number	12/364,823	Filing Date	2009-02-03	Docket Number (if applicable)	4394.1003-000	Art Unit	3687
First Named Inventor	James A. Proctor, Jr.			Examiner Name	Hayles, Ashford S.		

This is a Request for Continued Examination (RCE) under 37 CFR 1.114 of the above-identified application.
Request for Continued Examination (RCE) practice under 37 CFR 1.114 does not apply to any utility or plant application filed prior to June 8, 1995, or to any design application. The Instruction Sheet for this form is located at WWW.USPTO.GOV

SUBMISSION REQUIRED UNDER 37 CFR 1.114

Note: If the RCE is proper, any previously filed unentered amendments and amendments enclosed with the RCE will be entered in the order in which they were filed unless applicant instructs otherwise. If applicant does not wish to have any previously filed unentered amendment(s) entered, applicant must request non-entry of such amendment(s).

☐ Previously submitted. If a final Office action is outstanding, any amendments filed after the final Office action may be considered as a submission even if this box is not checked.

- ☐ Consider the arguments in the Appeal Brief or Reply Brief previously filed on _____
- ☐ Other _____

☒ Enclosed

- ☐ Amendment/Reply
- ☒ Information Disclosure Statement (IDS)
- ☐ Affidavit(s)/ Declaration(s)
- ☒ Other Remarks

MISCELLANEOUS

☐ Suspension of action on the above-identified application is requested under 37 CFR 1.103(c) for a period of months _____
(Period of suspension shall not exceed 3 months; Fee under 37 CFR 1.17(i) required)

☐ Other _____

FEES

☒ **The RCE fee under 37 CFR 1.17(e) is required by 37 CFR 1.114 when the RCE is filed.**
The Director is hereby authorized to charge any underpayment of fees, or credit any overpayments, to Deposit Account No 080380

SIGNATURE OF APPLICANT, ATTORNEY, OR AGENT REQUIRED

☒ Patent Practitioner Signature

☐ Applicant Signature

PTO/SB/30EFS (07-09)
Approved for use through 07/31/2012. OMB 0651-0031
U.S. Patent and Trademark Office; U.S. DEPARTMENT OF COMMERCE
Under the Paperwork Reduction Act of 1995, no persons are required to respond to a collection of information unless it contains a valid OMB control number.

Signature of Registered U.S. Patent Practitioner			
Signature	/David J Thibodeau Jr. Reg No 31671/	Date (YYYY-MM-DD)	2011-10-21
Name	David J. Thibodeau, Jr.	Registration Number	31671

This collection of information is required by 37 CFR 1.114. The information is required to obtain or retain a benefit by the public which is to file (and by the USPTO to process) an application. Confidentiality is governed by 35 U.S.C. 122 and 37 CFR 1.11 and 1.14. This collection is estimated to take 12 minutes to complete, including gathering, preparing, and submitting the completed application form to the USPTO. Time will vary depending upon the individual case. Any comments on the amount of time you require to complete this form and/or suggestions for reducing this burden, should be sent to the Chief Information Officer, U.S. Patent and Trademark Office, U.S. Department of Commerce, P.O. Box 1450, Alexandria, VA 22313-1450.

If you need assistance in completing the form, call 1-800-PTO-9199 and select option 2.

Privacy Act Statement

The Privacy Act of 1974 (P.L. 93-579) requires that you be given certain information in connection with your submission of the attached form related to a patent application or patent. Accordingly, pursuant to the requirements of the Act, please be advised that: (1) the general authority for the collection of this information is 35 U.S.C. 2(b)(2); (2) furnishing of the information solicited is voluntary; and (3) the principal purpose for which the information is used by the U.S. Patent and Trademark Office is to process and/or examine your submission related to a patent application or patent. If you do not furnish the requested information, the U.S. Patent and Trademark Office may not be able to process and/or examine your submission, which may result in termination of proceedings or abandonment of the application or expiration of the patent.

The information provided by you in this form will be subject to the following routine uses:

1. The information on this form will be treated confidentially to the extent allowed under the Freedom of Information Act (5 U.S.C. 552) and the Privacy Act (5 U.S.C. 552a). Records from this system of records may be disclosed to the Department of Justice to determine whether the Freedom of Information Act requires disclosure of these records.

2. A record from this system of records may be disclosed, as a routine use, in the course of presenting evidence to a court, magistrate, or administrative tribunal, including disclosures to opposing counsel in the course of settlement negotiations.

3. A record in this system of records may be disclosed, as a routine use, to a Member of Congress submitting a request involving an individual, to whom the record pertains, when the individual has requested assistance from the Member with respect to the subject matter of the record.

4. A record in this system of records may be disclosed, as a routine use, to a contractor of the Agency having need for the information in order to perform a contract. Recipients of information shall be required to comply with the requirements of the Privacy Act of 1974, as amended, pursuant to 5 U.S.C. 552a(m).

5. A record related to an International Application filed under the Patent Cooperation Treaty in this system of records may be disclosed, as a routine use, to the International Bureau of the World Intellectual Property Organization, pursuant to the Patent Cooperation Treaty.

6. A record in this system of records may be disclosed, as a routine use, to another federal agency for purposes of National Security review (35 U.S.C. 181) and for review pursuant to the Atomic Energy Act (42 U.S.C. 218(c)).

7. A record from this system of records may be disclosed, as a routine use, to the Administrator, General Services, or his/her designee, during an inspection of records conducted by GSA as part of that agency's responsibility to recommend improvements in records management practices and programs, under authority of 44 U.S.C. 2904 and 2906. Such disclosure shall be made in accordance with the GSA regulations governing inspection of records for this purpose, and any other relevant (i.e., GSA or Commerce) directive. Such disclosure shall not be used to make determinations about individuals.

8. A record from this system of records may be disclosed, as a routine use, to the public after either publication of the application pursuant to 35 U.S.C. 122(b) or issuance of a patent pursuant to 35 U.S.C. 151. Further, a record may be disclosed, subject to the limitations of 37 CFR 1.14, as a routine use, to the public if the record was filed in an application which became abandoned or in which the proceedings were terminated and which application is referenced by either a published application, an application open to public inspections or an issued patent.

9. A record from this system of records may be disclosed, as a routine use, to a Federal, State, or local law enforcement agency, if the USPTO becomes aware of a violation or potential violation of law or regulation.

DJT/nai
October 20, 2011

IN THE UNITED STATES PATENT AND TRADEMARK OFFICE

Applicant: James A. Proctor, Jr. and James A. Proctor, III

Application No.: 12/364,823 Group: 3687

Filed: February 3, 2009 Exaniner: Hayles, Ashford S.

Confirmation No.: 4791

For: Visual Identification Information Used As Confirmation In A Wireless Communication

Date: _____

EXPRESS MAIL LABEL NO. _____

REMARKS

Mail Stop RCE
Commissioner for Patents
P.O. Box 1450
Alexandria, VA 22313-1450

Sir:

Applicants are submitting an Information Disclosure Statement herewith so that additional prior art may be considered. The prior art submitted is not believed to support any new arguments against patentability of the claims as already allowed.

Specifically, Mgrdechian US Patent Publication US 2005/0174975 A1 is an online dating service that makes introductions between strangers who are "matched" by a server. The matching is based upon a user's preferences as a "filter" and pre-configured "profiles" of individual's detected device identifiers. A first device either directly receives identifies from local devices, or indirectly receives (is forwarded / hopped) them from other local devices. The identifiers are then sent by the first device to a server. The server then performs a matching between the user of the first device's preferences, as a filter, with profiles associated with the detected device identifiers. When profiles are matched, information from the matched profiles are returned to the first device.

It is mentioned in Mgrdechian (at paragraphs [0005] and [0096]) that this information may

contain a picture of the individual whose identifier was detected, that is --- the individual whose profile matched the owner of the first device's filter. Multiple such matches may be returned, and the user of the first device may select one or more of these profiles -- including images -- requesting further action such as to download more information about them, or even to send them a message potentially.

This differs from the Applicants' claimed invention as there is no suggestion that when an individual selects a matched profile, including the picture of the profile owner, that they have performed a comparison between an "identifying picture" and the actual owner of the detected device, and that they consider them to match. There is further no suggestion that a "verification of the identity" of the owner of the detected device is sent to the server.

In Mgrdechian, the user is merely selecting a a profile, which may include an image and sending a request to find out more about them. There is no suggestion that any form of verification of identification has occurred.

This is further evidenced by the fact that Mgrdechian teaches that identifiers may be forwarded between devices that are not in the same immediate area at extended range [104], and as such does not require the first user to be in visual contact with the detected user so as to compare what they see with the downloaded photograph. As with many online dating sites or other social networks, the selection, if based upon the picture in the profile, may be based upon physical attractiveness or any other personal preference.

In view of the foregoing, we request review of the prior art cited herewith and furthering the application to issuance.

Respectfully submitted,

HAMILTON, BROOK, SMITH & REYNOLDS, P.C.

By /David J Thibodeau Jr Reg No 31671/
David J. Thibodeau, Jr.
Registration No.: 31,671
Telephone: (978) 341-0036
Facsimile: (978) 341-0136

Concord, MA 01742-9133
Date: October 21, 2011

IN THE UNITED STATES PATENT AND TRADEMARK OFFICE

Applicant:	James A. Proctor, Jr. and James A. Proctor, III		
Application No.:	12/364,823	Group:	3687
Filed:	February 3, 2009	Examiner:	Hayles, Ashford S.
Confirmation No.:	4791		
For:	Visual Identification Information Used As Confirmation In A Wireless Communication		

CERTIFICATE OF MAILING OR TRANSMISSION

I hereby certify that this correspondence is being deposited with the United States Postal Service with sufficient postage as First Class Mail in an envelope addressed to Commissioner for Patents, P.O. Box 1450, Alexandria, VA 22313-1450, or is being facsimile transmitted to the United States Patent and Trademark Office on:

_____ _____
Date Signature

_____
Typed or printed name of person signing certificate

TRANSMITTAL LETTER FOR
SUPPLEMENTAL INFORMATION DISCLOSURE STATEMENT

Mail Stop Amendment
Commissioner for Patents
P.O. Box 1450
Alexandria, VA 22313-1450

Sir:

This Information Disclosure Statement is submitted:

☒ under 37 CFR 1.97(b), or
(Within any one of the following time periods: three months of filing national application (other than a CPA) or date of entry of the national stage in an international application; or before the mailing date of a first office action on the merits; or before the mailing of a first office action after the filing of a Request for Continued Examination).

☐ under 37 CFR 1.97(c) together with either:
- ☐ a Statement under 37 CFR 1.97(e), as checked below, or
- ☐ a $180.00 fee under 37 CFR 1.17(p), or
  (After the 37 CFR 1.97(b) time period, but before any of a final action, notice of allowance, or an action that closes prosecution, whichever occurs first)

☐ under 37 CFR 1.97(d) together with:
- ☐ a Statement under 37 CFR 1.97(e), as checked below, and
- ☐ a $180.00 fee under 37 CFR 1.17(p), or
  (Filed after final action, notice of allowance, whichever occurs first, or if prosecution otherwise closes, but on or before payment of the issue fee)

☐ under 37 CFR 1.97(i):
Applicant requests that the IDS and cited reference(s) be placed in the application file.
(Filed after payment of issue fee)

Statement Under 37 CFR 1.97(e)

☐ Each item of information contained in this Information Disclosure Statement was first cited in any communication from a foreign patent office in a counterpart foreign application not more than three months prior to the filing of this Information Disclosure Statement; or

☐ No item of information contained in this Information Disclosure Statement was cited in a communication from a foreign patent office in a counterpart foreign application, and, to the knowledge of the undersigned, after making reasonable inquiry, no item of information contained in the information disclosure statement was known to any individual designated in 37 CFR 1.56(c) more than three months prior to the filing of this Information Disclosure Statement.

Statement Under 37 CFR 1.704(d) (Patent Term Adjustment)
Applies to original applications (other than design) filed on or after May 29, 2000

☐ Each item of information contained in the Information Disclosure Statement was cited in a communication from a foreign patent office in a counterpart application and this communication was not received by any individual designated in § 1.56(c) more than thirty days prior to the filing of the Information Disclosure Statement.

☒ Enclosed herewith is a Listing of References. Copies of the cited references are enclosed except as indicated below or in the attached Listing of References.

☐ Copies of the cited references submitted with an Information Disclosure Statement in prior application, U.S. Application No. [ ], to which priority under 35 U.S.C. 120 is claimed, are not required under 37 CFR 1.98(d)(1) and (2) and are thus not provided.

☐ The listed references were cited in the enclosed Search Report in counterpart foreign application [add application number], which is listed in the attached Listing of References.

☐ The "concise explanation" requirement (non-English references) for reference(s) [ ] under 37 CFR 1.98(a)(3) is satisfied by:

- ☐ the explanation provided on the attached sheet.
- ☐ the explanation provided in the Specification.
- ☐ submission of the enclosed International Search Report.
- ☐ submission of the enclosed English-language version of a foreign Search Report and/or foreign Office Action.
- ☐ the enclosed English language abstract.

Method of payment:

☐ Authorization is NOT granted to charge any fees which may be due in this matter to our Deposit Account.

☐ Please charge Deposit Account 08-0380 in the amount of $☐.

☐ A check for the fee noted above is enclosed, or the fee has been included in the check with the accompanying Reply.

☒ Please charge any deficiency in fees and credit any overpayment to Deposit Account 08-0380.

Respectfully submitted,

HAMILTON, BROOK, SMITH & REYNOLDS, P.C.

By /David J Thibodeau Jr Reg No 31671/
David J. Thibodeau, Jr.
Registration No. 31,671
Telephone: (978) 341-0036
Facsimile: (978) 341-0136

Concord, MA 01742-9133
Dated: October 21, 2011

1142037.1

Substitute for form 1449B/PTO **SUPPLEMENTAL INFORMATION DISCLOSURE STATEMENT IN AN APPLICATION** **LISTING OF REFERENCES** **October 20, 2011** (Use several sheets if necessary)	ATTORNEY DOCKET NO. 4394.1003-000		APPLICATION NO. 12/364,823
	FIRST NAMED INVENTOR James A. Proctor, Jr.		FILING DATE February 3, 2009
	EXAMINER Hayles, Ashford S.	CONFIRMATION NO. 4791	GROUP 3687

U.S. PATENT DOCUMENTS

Examiner's Initials	Ref. No.	DOCUMENT NUMBER Number-Kind Code (if known)	ISSUE DATE / PUBLICATION DATE MM-DD-YYYY	NAME OF PATENTEE OR APPLICANT OF CITED DOCUMENT
	A52	2005/0174975	08-11-2005	Mgrdechian, et al.
	A53	2003/0074259	04-17-2003	Slyman, Jr., et al.

Copies of issued U.S. Patents and Published U.S. Applications are not required and are not being provided. We are not listing separately any prior U.S. Patent Office communications regarding the cited documents because the Examiner has access to any such actions through PAIR.

EXAMINER	DATE CONSIDERED

Electronic Patent Application Fee Transmittal

Application Number:	12364823
Filing Date:	03-Feb-2009
Title of Invention:	VISUAL IDENTIFICATION INFORMATION USED AS CONFIRMATION IN A WIRELESS COMMUNICATION
First Named Inventor/Applicant Name:	James Arthur Proctor
Filer:	David J. Thibodeau/Nicole Isabelle
Attorney Docket Number:	4394.1003-000

Filed as Small Entity

Utility under 35 USC 111(a) Filing Fees

Description	Fee Code	Quantity	Amount	Sub-Total in USD($)
Basic Filing:				
Pages:				
Claims:				
Miscellaneous-Filing:				
Petition:				
Patent-Appeals-and-Interference:				
Post-Allowance-and-Post-Issuance:				
Extension-of-Time:				

Description	Fee Code	Quantity	Amount	Sub-Total in USD($)
Miscellaneous:				
Request for continued examination	2801	1	465	465
		Total in USD ($)		**465**

Electronic Acknowledgement Receipt

EFS ID:	11237791
Application Number:	12364823
International Application Number:	
Confirmation Number:	4791
Title of Invention:	VISUAL IDENTIFICATION INFORMATION USED AS CONFIRMATION IN A WIRELESS COMMUNICATION
First Named Inventor/Applicant Name:	James Arthur Proctor
Customer Number:	21005
Filer:	David J. Thibodeau/Nicole Isabelle
Filer Authorized By:	David J. Thibodeau
Attorney Docket Number:	4394.1003-000
Receipt Date:	21-OCT-2011
Filing Date:	03-FEB-2009
Time Stamp:	14:03:34
Application Type:	Utility under 35 USC 111(a)

Payment information:

Submitted with Payment	yes
Payment Type	Deposit Account
Payment was successfully received in RAM	$465
RAM confirmation Number	249
Deposit Account	080380
Authorized User	
The Director of the USPTO is hereby authorized to charge indicated fees and credit any overpayment as follows:	
Charge any Additional Fees required under 37 C.F.R. Section 1.21 (Miscellaneous fees and charges)	

File Listing:

Document Number	Document Description	File Name	File Size(Bytes)/ Message Digest	Multi Part /.zip	Pages (if appl.)
1	Request for Continued Examination (RCE)	43941003000rce.pdf	697897 8276e72ed030921fba74c73edd81def1d8e7e766	no	3
Warnings:					
Information:					
2	Miscellaneous Incoming Letter	43941003000remarks.pdf	78459 847fb411ce14c947465f1d993829a1443b321bc7	no	3
Warnings:					
Information:					
3	Transmittal Letter	43941003000sids.pdf	74057 8a2fb035d053c8bcda4bbe26abd9e09cfe059d76	no	3
Warnings:					
Information:					
4	Information Disclosure Statement (IDS) Form (SB08)	43941003000slor.pdf	62339 c1eeceea45eb75a34c60c9a6533a8c7d45c6fa13	no	1
Warnings:					
Information:					
This is not an USPTO supplied IDS fillable form					
5	Fee Worksheet (SB06)	fee-info.pdf	30421 976dab1315e31b4387d8c8bb11f386424d6a9ebe	no	2
Warnings:					
Information:					
		Total Files Size (in bytes):	943173		

This Acknowledgement Receipt evidences receipt on the noted date by the USPTO of the indicated documents, characterized by the applicant, and including page counts, where applicable. It serves as evidence of receipt similar to a Post Card, as described in MPEP 503.

New Applications Under 35 U.S.C. 111
If a new application is being filed and the application includes the necessary components for a filing date (see 37 CFR 1.53(b)-(d) and MPEP 506), a Filing Receipt (37 CFR 1.54) will be issued in due course and the date shown on this Acknowledgement Receipt will establish the filing date of the application.

National Stage of an International Application under 35 U.S.C. 371
If a timely submission to enter the national stage of an international application is compliant with the conditions of 35 U.S.C. 371 and other applicable requirements a Form PCT/DO/EO/903 indicating acceptance of the application as a national stage submission under 35 U.S.C. 371 will be issued in addition to the Filing Receipt, in due course.

New International Application Filed with the USPTO as a Receiving Office
If a new international application is being filed and the international application includes the necessary components for an international filing date (see PCT Article 11 and MPEP 1810), a Notification of the International Application Number and of the International Filing Date (Form PCT/RO/105) will be issued in due course, subject to prescriptions concerning national security, and the date shown on this Acknowledgement Receipt will establish the international filing date of the application.

UNITED STATES PATENT AND TRADEMARK OFFICE

UNITED STATES DEPARTMENT OF COMMERCE
United States Patent and Trademark Office
Address: COMMISSIONER FOR PATENTS
P.O. Box 1450
Alexandria, Virginia 22313-1450
www.uspto.gov

NOTICE OF ALLOWANCE AND FEE(S) DUE

21005 7590 11/17/2011
HAMILTON, BROOK, SMITH & REYNOLDS, P.C.
530 VIRGINIA ROAD
P.O. BOX 9133
CONCORD, MA 01742-9133

EXAMINER
HAYLES, ASHFORD S

ART UNIT	PAPER NUMBER
3687	

DATE MAILED: 11/17/2011

APPLICATION NO.	FILING DATE	FIRST NAMED INVENTOR	ATTORNEY DOCKET NO.	CONFIRMATION NO.
12/364,823	02/03/2009	James Arthur Proctor JR.	4394.1003-000	4791

TITLE OF INVENTION: VISUAL IDENTIFICATION INFORMATION USED AS CONFIRMATION IN A WIRELESS COMMUNICATION

APPLN. TYPE	SMALL ENTITY	ISSUE FEE DUE	PUBLICATION FEE DUE	PREV. PAID ISSUE FEE	TOTAL FEE(S) DUE	DATE DUE
nonprovisional	YES	$870	$300	$0	$1170	02/17/2012

THE APPLICATION IDENTIFIED ABOVE HAS BEEN EXAMINED AND IS ALLOWED FOR ISSUANCE AS A PATENT. PROSECUTION ON THE MERITS IS CLOSED. THIS NOTICE OF ALLOWANCE IS NOT A GRANT OF PATENT RIGHTS. THIS APPLICATION IS SUBJECT TO WITHDRAWAL FROM ISSUE AT THE INITIATIVE OF THE OFFICE OR UPON PETITION BY THE APPLICANT. SEE 37 CFR 1.313 AND MPEP 1308.

THE ISSUE FEE AND PUBLICATION FEE (IF REQUIRED) MUST BE PAID WITHIN THREE MONTHS FROM THE MAILING DATE OF THIS NOTICE OR THIS APPLICATION SHALL BE REGARDED AS ABANDONED. THIS STATUTORY PERIOD CANNOT BE EXTENDED. SEE 35 U.S.C. 151. THE ISSUE FEE DUE INDICATED ABOVE DOES NOT REFLECT A CREDIT FOR ANY PREVIOUSLY PAID ISSUE FEE IN THIS APPLICATION. IF AN ISSUE FEE HAS PREVIOUSLY BEEN PAID IN THIS APPLICATION (AS SHOWN ABOVE), THE RETURN OF PART B OF THIS FORM WILL BE CONSIDERED A REQUEST TO REAPPLY THE PREVIOUSLY PAID ISSUE FEE TOWARD THE ISSUE FEE NOW DUE.

HOW TO REPLY TO THIS NOTICE:

I. Review the SMALL ENTITY status shown above.

If the SMALL ENTITY is shown as YES, verify your current SMALL ENTITY status:

A. If the status is the same, pay the TOTAL FEE(S) DUE shown above.

B. If the status above is to be removed, check box 5b on Part B - Fee(s) Transmittal and pay the PUBLICATION FEE (if required) and twice the amount of the ISSUE FEE shown above, or

If the SMALL ENTITY is shown as NO:

A. Pay TOTAL FEE(S) DUE shown above, or

B. If applicant claimed SMALL ENTITY status before, or is now claiming SMALL ENTITY status, check box 5a on Part B - Fee(s) Transmittal and pay the PUBLICATION FEE (if required) and 1/2 the ISSUE FEE shown above.

II. PART B - FEE(S) TRANSMITTAL, or its equivalent, must be completed and returned to the United States Patent and Trademark Office (USPTO) with your ISSUE FEE and PUBLICATION FEE (if required). If you are charging the fee(s) to your deposit account, section "4b" of Part B - Fee(s) Transmittal should be completed and an extra copy of the form should be submitted. If an equivalent of Part B is filed, a request to reapply a previously paid issue fee must be clearly made, and delays in processing may occur due to the difficulty in recognizing the paper as an equivalent of Part B.

III. All communications regarding this application must give the application number. Please direct all communications prior to issuance to Mail Stop ISSUE FEE unless advised to the contrary.

IMPORTANT REMINDER: Utility patents issuing on applications filed on or after Dec. 12, 1980 may require payment of maintenance fees. It is patentee's responsibility to ensure timely payment of maintenance fees when due.

PART B - FEE(S) TRANSMITTAL

Complete and send this form, together with applicable fee(s), to: Mail **Mail Stop ISSUE FEE**
Commissioner for Patents
P.O. Box 1450
Alexandria, Virginia 22313-1450
or Fax (571)-273-2885

INSTRUCTIONS: This form should be used for transmitting the ISSUE FEE and PUBLICATION FEE (if required). Blocks 1 through 5 should be completed where appropriate. All further correspondence including the Patent, advance orders and notification of maintenance fees will be mailed to the current correspondence address as indicated unless corrected below or directed otherwise in Block 1, by (a) specifying a new correspondence address; and/or (b) indicating a separate "FEE ADDRESS" for maintenance fee notifications.

CURRENT CORRESPONDENCE ADDRESS (Note: Use Block 1 for any change of address)

21005 7590 11/17/2011
HAMILTON, BROOK, SMITH & REYNOLDS, P.C.
530 VIRGINIA ROAD
P.O. BOX 9133
CONCORD, MA 01742-9133

Note: A certificate of mailing can only be used for domestic mailings of the Fee(s) Transmittal. This certificate cannot be used for any other accompanying papers. Each additional paper, such as an assignment or formal drawing, must have its own certificate of mailing or transmission.

Certificate of Mailing or Transmission

I hereby certify that this Fee(s) Transmittal is being deposited with the United States Postal Service with sufficient postage for first class mail in an envelope addressed to the Mail Stop ISSUE FEE address above, or being facsimile transmitted to the USPTO (571) 273-2885, on the date indicated below.

(Depositor's name)
(Signature)
(Date)

APPLICATION NO.	FILING DATE	FIRST NAMED INVENTOR	ATTORNEY DOCKET NO.	CONFIRMATION NO.
12/364,823	02/03/2009	James Arthur Proctor JR.	4394.1003-000	4791

TITLE OF INVENTION: VISUAL IDENTIFICATION INFORMATION USED AS CONFIRMATION IN A WIRELESS COMMUNICATION

APPLN. TYPE	SMALL ENTITY	ISSUE FEE DUE	PUBLICATION FEE DUE	PREV. PAID ISSUE FEE	TOTAL FEE(S) DUE	DATE DUE
nonprovisional	YES	$870	$300	$0	$1170	02/17/2012

EXAMINER	ART UNIT	CLASS-SUBCLASS
HAYLES, ASHFORD S	3687	705-021000

1. Change of correspondence address or indication of "Fee Address" (37 CFR 1.363).
- ❑ Change of correspondence address (or Change of Correspondence Address form PTO/SB/122) attached.
- ❑ "Fee Address" indication (or "Fee Address" Indication form PTO/SB/47; Rev 03-02 or more recent) attached. **Use of a Customer Number is required.**

2. For printing on the patent front page, list
(1) the names of up to 3 registered patent attorneys or agents OR, alternatively,
(2) the name of a single firm (having as a member a registered attorney or agent) and the names of up to 2 registered patent attorneys or agents. If no name is listed, no name will be printed.

1_____
2_____
3_____

3. ASSIGNEE NAME AND RESIDENCE DATA TO BE PRINTED ON THE PATENT (print or type)

PLEASE NOTE: Unless an assignee is identified below, no assignee data will appear on the patent. If an assignee is identified below, the document has been filed for recordation as set forth in 37 CFR 3.11. Completion of this form is NOT a substitute for filing an assignment.

(A) NAME OF ASSIGNEE (B) RESIDENCE: (CITY and STATE OR COUNTRY)

Please check the appropriate assignee category or categories (will not be printed on the patent) : ❑ Individual ❑ Corporation or other private group entity ❑ Government

4a. The following fee(s) are submitted:
- ❑ Issue Fee
- ❑ Publication Fee (No small entity discount permitted)
- ❑ Advance Order - # of Copies _____

4b. Payment of Fee(s): (**Please first reapply any previously paid issue fee shown above**)
- ❑ A check is enclosed.
- ❑ Payment by credit card. Form PTO-2038 is attached.
- ❑ The Director is hereby authorized to charge the required fee(s), any deficiency, or credit any overpayment, to Deposit Account Number _____ (enclose an extra copy of this form).

5. **Change in Entity Status** (from status indicated above)
- ❑ a. Applicant claims SMALL ENTITY status. See 37 CFR 1.27.
- ❑ b. Applicant is no longer claiming SMALL ENTITY status. See 37 CFR 1.27(g)(2).

NOTE: The Issue Fee and Publication Fee (if required) will not be accepted from anyone other than the applicant; a registered attorney or agent; or the assignee or other party in interest as shown by the records of the United States Patent and Trademark Office.

Authorized Signature _____ Date _____

Typed or printed name _____ Registration No. _____

This collection of information is required by 37 CFR 1.311. The information is required to obtain or retain a benefit by the public which is to file (and by the USPTO to process) an application. Confidentiality is governed by 35 U.S.C. 122 and 37 CFR 1.14. This collection is estimated to take 12 minutes to complete, including gathering, preparing, and submitting the completed application form to the USPTO. Time will vary depending upon the individual case. Any comments on the amount of time you require to complete this form and/or suggestions for reducing this burden, should be sent to the Chief Information Officer, U.S. Patent and Trademark Office, U.S. Department of Commerce, P.O. Box 1450, Alexandria, Virginia 22313-1450. DO NOT SEND FEES OR COMPLETED FORMS TO THIS ADDRESS. SEND TO: Commissioner for Patents, P.O. Box 1450, Alexandria, Virginia 22313-1450.

Under the Paperwork Reduction Act of 1995, no persons are required to respond to a collection of information unless it displays a valid OMB control number.

UNITED STATES PATENT AND TRADEMARK OFFICE

UNITED STATES DEPARTMENT OF COMMERCE
United States Patent and Trademark Office
Address: COMMISSIONER FOR PATENTS
P.O. Box 1450
Alexandria, Virginia 22313-1450
www.uspto.gov

APPLICATION NO.	FILING DATE	FIRST NAMED INVENTOR	ATTORNEY DOCKET NO.	CONFIRMATION NO.
12/364,823	02/03/2009	James Arthur Proctor JR.	4394.1003-000	4791

21005 7590 11/17/2011
HAMILTON, BROOK, SMITH & REYNOLDS, P.C.
530 VIRGINIA ROAD
P.O. BOX 9133
CONCORD, MA 01742-9133

EXAMINER
HAYLES, ASHFORD S

ART UNIT	PAPER NUMBER
3687	

DATE MAILED: 11/17/2011

Determination of Patent Term Adjustment under 35 U.S.C. 154 (b)
(application filed on or after May 29, 2000)

The Patent Term Adjustment to date is 142 day(s). If the issue fee is paid on the date that is three months after the mailing date of this notice and the patent issues on the Tuesday before the date that is 28 weeks (six and a half months) after the mailing date of this notice, the Patent Term Adjustment will be 142 day(s).

If a Continued Prosecution Application (CPA) was filed in the above-identified application, the filing date that determines Patent Term Adjustment is the filing date of the most recent CPA.

Applicant will be able to obtain more detailed information by accessing the Patent Application Information Retrieval (PAIR) WEB site (http://pair.uspto.gov).

Any questions regarding the Patent Term Extension or Adjustment determination should be directed to the Office of Patent Legal Administration at (571)-272-7702. Questions relating to issue and publication fee payments should be directed to the Customer Service Center of the Office of Patent Publication at 1-(888)-786-0101 or (571)-272-4200.

PTOL-85 (Rev. 02/11)

Privacy Act Statement

The Privacy Act of 1974 (P.L. 93-579) requires that you be given certain information in connection with your submission of the attached form related to a patent application or patent. Accordingly, pursuant to the requirements of the Act, please be advised that: (1) the general authority for the collection of this information is 35 U.S.C. 2(b)(2); (2) furnishing of the information solicited is voluntary; and (3) the principal purpose for which the information is used by the U.S. Patent and Trademark Office is to process and/or examine your submission related to a patent application or patent. If you do not furnish the requested information, the U.S. Patent and Trademark Office may not be able to process and/or examine your submission, which may result in termination of proceedings or abandonment of the application or expiration of the patent.

The information provided by you in this form will be subject to the following routine uses:

1. The information on this form will be treated confidentially to the extent allowed under the Freedom of Information Act (5 U.S.C. 552) and the Privacy Act (5 U.S.C 552a). Records from this system of records may be disclosed to the Department of Justice to determine whether disclosure of these records is required by the Freedom of Information Act.
2. A record from this system of records may be disclosed, as a routine use, in the course of presenting evidence to a court, magistrate, or administrative tribunal, including disclosures to opposing counsel in the course of settlement negotiations.
3. A record in this system of records may be disclosed, as a routine use, to a Member of Congress submitting a request involving an individual, to whom the record pertains, when the individual has requested assistance from the Member with respect to the subject matter of the record.
4. A record in this system of records may be disclosed, as a routine use, to a contractor of the Agency having need for the information in order to perform a contract. Recipients of information shall be required to comply with the requirements of the Privacy Act of 1974, as amended, pursuant to 5 U.S.C. 552a(m).
5. A record related to an International Application filed under the Patent Cooperation Treaty in this system of records may be disclosed, as a routine use, to the International Bureau of the World Intellectual Property Organization, pursuant to the Patent Cooperation Treaty.
6. A record in this system of records may be disclosed, as a routine use, to another federal agency for purposes of National Security review (35 U.S.C. 181) and for review pursuant to the Atomic Energy Act (42 U.S.C. 218(c)).
7. A record from this system of records may be disclosed, as a routine use, to the Administrator, General Services, or his/her designee, during an inspection of records conducted by GSA as part of that agency's responsibility to recommend improvements in records management practices and programs, under authority of 44 U.S.C. 2904 and 2906. Such disclosure shall be made in accordance with the GSA regulations governing inspection of records for this purpose, and any other relevant (i.e., GSA or Commerce) directive. Such disclosure shall not be used to make determinations about individuals.
8. A record from this system of records may be disclosed, as a routine use, to the public after either publication of the application pursuant to 35 U.S.C. 122(b) or issuance of a patent pursuant to 35 U.S.C. 151. Further, a record may be disclosed, subject to the limitations of 37 CFR 1.14, as a routine use, to the public if the record was filed in an application which became abandoned or in which the proceedings were terminated and which application is referenced by either a published application, an application open to public inspection or an issued patent.
9. A record from this system of records may be disclosed, as a routine use, to a Federal, State, or local law enforcement agency, if the USPTO becomes aware of a violation or potential violation of law or regulation.

Notice of Allowability	Application No.	Applicant(s)	
	12/364,823	PROCTOR ET AL.	
	Examiner	Art Unit	
	ASHFORD S. HAYLES	3687	

-- The MAILING DATE of this communication appears on the cover sheet with the correspondence address--

All claims being allowable, PROSECUTION ON THE MERITS IS (OR REMAINS) CLOSED in this application. If not included herewith (or previously mailed), a Notice of Allowance (PTOL-85) or other appropriate communication will be mailed in due course. **THIS NOTICE OF ALLOWABILITY IS NOT A GRANT OF PATENT RIGHTS.** This application is subject to withdrawal from issue at the initiative of the Office or upon petition by the applicant. See 37 CFR 1.313 and MPEP 1308.

1. ☒ This communication is responsive to *10/21/2011*.

2. ☐ An election was made by the applicant in response to a restriction requirement set forth during the interview on _____; the restriction requirement and election have been incorporated into this action.

3. ☒ The allowed claim(s) is/are *1-14,16 and 21-34*.

4. ☐ Acknowledgment is made of a claim for foreign priority under 35 U.S.C. § 119(a)-(d) or (f).
   a) ☐ All b) ☐ Some* c) ☐ None of the:
      1. ☐ Certified copies of the priority documents have been received.
      2. ☐ Certified copies of the priority documents have been received in Application No. _____ .
      3. ☐ Copies of the certified copies of the priority documents have been received in this national stage application from the International Bureau (PCT Rule 17.2(a)).

   * Certified copies not received: _____.

Applicant has THREE MONTHS FROM THE "MAILING DATE" of this communication to file a reply complying with the requirements noted below. Failure to timely comply will result in ABANDONMENT of this application.
THIS THREE-MONTH PERIOD IS NOT EXTENDABLE.

5. ☐ A SUBSTITUTE OATH OR DECLARATION must be submitted. Note the attached EXAMINER'S AMENDMENT or NOTICE OF INFORMAL PATENT APPLICATION (PTO-152) which gives reason(s) why the oath or declaration is deficient.

6. ☐ CORRECTED DRAWINGS (as "replacement sheets") must be submitted.
   (a) ☐ including changes required by the Notice of Draftsperson's Patent Drawing Review (PTO-948) attached
      1) ☐ hereto or 2) ☐ to Paper No./Mail Date _____.
   (b) ☐ including changes required by the attached Examiner's Amendment / Comment or in the Office action of Paper No./Mail Date _____.

   Identifying indicia such as the application number (see 37 CFR 1.84(c)) should be written on the drawings in the front (not the back) of each sheet. Replacement sheet(s) should be labeled as such in the header according to 37 CFR 1.121(d).

7. ☐ DEPOSIT OF and/or INFORMATION about the deposit of BIOLOGICAL MATERIAL must be submitted. Note the attached Examiner's comment regarding REQUIREMENT FOR THE DEPOSIT OF BIOLOGICAL MATERIAL.

Attachment(s)

1. ☐ Notice of References Cited (PTO-892)
2. ☐ Notice of Draftperson's Patent Drawing Review (PTO-948)
3. ☒ Information Disclosure Statements (PTO/SB/08), Paper No./Mail Date 10/21/2011
4. ☐ Examiner's Comment Regarding Requirement for Deposit of Biological Material
5. ☐ Notice of Informal Patent Application
6. ☐ Interview Summary (PTO-413), Paper No./Mail Date _____ .
7. ☐ Examiner's Amendment/Comment
8. ☒ Examiner's Statement of Reasons for Allowance
9. ☐ Other _____.

/Elaine Gort/
Primary Examiner, Art Unit 3687

DETAILED ACTION

Continued Examination Under 37 CFR 1.114

1. A request for continued examination under 37 CFR 1.114, including the fee set forth in 37 CFR 1.17(e), was filed in this application after allowance or after an Office action under *Ex Parte Quayle*, 25 USPQ 74, 453 O.G. 213 (Comm'r Pat. 1935). Since this application is eligible for continued examination under 37 CFR 1.114, and the fee set forth in 37 CFR 1.17(e) has been timely paid, prosecution in this application has been reopened pursuant to 37 CFR 1.114. Applicant's submission filed on October 21, 2011 has been entered.

Information Disclosure Statement

2. The information disclosure statement (IDS) submitted on October 21, 2011 was filed after the mailing date of the Notice of Allowance on September 29, 2011. The submission is in compliance with the provisions of 37 CFR 1.97. Accordingly, the information disclosure statement is being considered by the examiner.

REASONS FOR ALLOWANCE

3. Examiner's reasons for allowance are the same as stated in the Notice of Allowance dated September 29, 2011.

Conclusion

Any inquiry concerning this communication or earlier communications from the examiner should be directed to ASHFORD S. HAYLES whose telephone number is (571)270-5106. The examiner can normally be reached on Monday - Friday 8:00 A.M.-5:00 P.M..

If attempts to reach the examiner by telephone are unsuccessful, the examiner's supervisor, Matthew S. Gart can be reached on 571-272-3955. The fax phone number for the organization where this application or proceeding is assigned is 571-273-8300.

Information regarding the status of an application may be obtained from the Patent Application Information Retrieval (PAIR) system. Status information for published applications may be obtained from either Private PAIR or Public PAIR. Status information for unpublished applications is available through Private PAIR only. For more information about the PAIR system, see http://pair-direct.uspto.gov. Should you have questions on access to the Private PAIR system, contact the Electronic Business Center (EBC) at 866-217-9197 (toll-free). If you would like assistance from a USPTO Customer Service Representative or access to the automated information system, call 800-786-9199 (IN USA OR CANADA) or 571-272-1000.

/Elaine Gort/

Primary Examiner, Art Unit 3687

/A. S. H./
Examiner, Art Unit 3687
4.

Substitute for form 1449B/PTO **SUPPLEMENTAL INFORMATION DISCLOSURE STATEMENT IN AN APPLICATION** **LISTING OF REFERENCES** **October 20, 2011** (Use several sheets if necessary)	ATTORNEY DOCKET NO. 4394.1003-000		APPLICATION NO. 12/364,823
	FIRST NAMED INVENTOR James A. Proctor, Jr.		FILING DATE February 3, 2009
	EXAMINER Hayles, Ashford S.	CONFIRMATION NO. 4791	GROUP 3687

U.S. PATENT DOCUMENTS

Examiner's Initials	Ref. No.	DOCUMENT NUMBER Number-Kind Code (if known)	ISSUE DATE / PUBLICATION DATE MM-DD-YYYY	NAME OF PATENTEE OR APPLICANT OF CITED DOCUMENT
/A.H./	A52	2005/0174975	08-11-2005	Mgrdechian, et al.
/A.H./	A53	2003/0074259	04-17-2003	Slyman, Jr., et al.

Copies of issued U.S. Patents and Published U.S. Applications are not required and are not being provided. We are not listing separately any prior U.S. Patent Office communications regarding the cited documents because the Examiner has access to any such actions through PAIR.

EXAMINER	DATE CONSIDERED
/Ashford Hayles/	11/04/2011

ALL REFERENCES CONSIDERED EXCEPT WHERE LINED THROUGH. /A.H./

Search Notes	Application/Control No.	Applicant(s)/Patent Under Reexamination
	12364823	PROCTOR ET AL.
	Examiner	**Art Unit**
	ASHFORD HAYLES	3687

SEARCHED

Class	Subclass	Date	Examiner
705	21	5/27/2010	AH
370	329	8/9/2011	AH

SEARCH NOTES

Search Notes	Date	Examiner
EAST (See Attachments)	5/27/2010	AH
Updated EAST (See Attachments)	12/7/2010	AH
Updated EAST (See Attachments)	8/9/2011	AH
Dialog QuickSearch	8/9/2011	AH

INTERFERENCE SEARCH

Class	Subclass	Date	Examiner
705	21	8/9/2011	AH
370	329	8/9/2011	AH

EAST Search History

EAST Search History (Prior Art)

Ref #	Hits	Search Query	DBs	Default Operator	Plurals	Time Stamp
L1	2	("20080313079").PN.	US-PGPUB; USPAT; USOCR; FPRS; EPO; JPO; DERWENT; IBM_TDB	OR	OFF	2010/05/31 17:19
S1	4652	(payment or transaction) with (user adj input)	US-PGPUB; USPAT; USOCR; FPRS; EPO; JPO; DERWENT; IBM_TDB	OR	ON	2010/05/31 15:05
S2	14	(wireless or contactless) near(payment or transaction) with (user adj input)	US-PGPUB; USPAT; USOCR; FPRS; EPO; JPO; DERWENT; IBM_TDB	OR	ON	2010/05/31 15:05
S3	89	("20020073027" | "20020188565" | "20030045272" | "20040030601" | "20040190468" | "20040264466" | "20060069922" | "20060079284" | "20060085419" | "20070106612" | "20070178886" | "20080010190" | "20080097851" | "20080109741" | "20080114699" | "20080133403" | "20080167961" | "20080181154" | "20080182591" | "20080182592" | "20080189394" | "20080222711" | "20090037286" | "20090177530" | "20090281904" | "20090313105" | "6487601" | "7177594" |	US-PGPUB; USPAT; USOCR; FPRS; EPO; JPO; DERWENT; IBM_TDB	OR	ON	2010/05/31 15:12

		"7185204" | "7233960" | "7280847" | "7305245" | "7315944" | "7349871" | "7403762" | "7414988" | "7433649" | "7433694" | "7434723").PN.				

EAST Search History (Interference)

<This search history is empty>

5/31/2010 5:28:37 PM
C:\Documents and Settings\ahayles\My Documents\EAST\Workspaces\12364823.wsp

UNITED STATES PATENT AND TRADEMARK OFFICE

UNITED STATES DEPARTMENT OF COMMERCE
United States Patent and Trademark Office
Address: COMMISSIONER FOR PATENTS
P.O. Box 1450
Alexandria, Virginia 22313-1450
www.uspto.gov

BIB DATA SHEET

CONFIRMATION NO. 4791

SERIAL NUMBER	FILING or 371(c) DATE	CLASS	GROUP ART UNIT	ATTORNEY DOCKET NO.
12/364,823	02/03/2009 **RULE**	705	3687	4394.1003-000

APPLICANTS

James Arthur Proctor JR., Melbourne Beach, FL;
James Arthur Proctor III, Indialantic, FL;

**** CONTINUING DATA ***************************

This appln claims benefit of 61/095,001 09/08/2008
and claims benefit of 61/095,359 09/09/2008

**** FOREIGN APPLICATIONS ****************************

**** IF REQUIRED, FOREIGN FILING LICENSE GRANTED **** ** SMALL ENTITY **
02/13/2009

Foreign Priority claimed	❑ Yes ☑ No		STATE OR COUNTRY	SHEETS DRAWINGS	TOTAL CLAIMS	INDEPENDENT CLAIMS
35 USC 119(a-d) conditions met	❑ Yes ☑ No	❑ Met after Allowance	FL	14	14	2
Verified and Acknowledged	/ASHFORD S HAYLES/ Examiner's Signature	ASH Initials				

ADDRESS

HAMILTON, BROOK, SMITH & REYNOLDS, P.C.
530 VIRGINIA ROAD
P.O. BOX 9133
CONCORD, MA 01742-9133
UNITED STATES

TITLE

VISUAL IDENTIFICATION INFORMATION USED AS CONFIRMATION IN A WIRELESS COMMUNICATION

FILING FEE RECEIVED		
910	FEES: Authority has been given in Paper No._____ to charge/credit DEPOSIT ACCOUNT No._____ for following:	❑ All Fees ❑ 1.16 Fees (Filing) ❑ 1.17 Fees (Processing Ext. of time) ❑ 1.18 Fees (Issue) ❑ Other _____ ❑ Credit

Issue Classification

Application/Control No.	Applicant(s)/Patent Under Reexamination
12364823	PROCTOR ET AL.
Examiner	**Art Unit**
ASHFORD S HAYLES	3687

ORIGINAL		INTERNATIONAL CLASSIFICATION									
CLASS	SUBCLASS	CLAIMED					NON-CLAIMED				
705	21	G	0	6	G	1 / 12					
		H	0	4	W	4 / 00					

CROSS REFERENCE(S)

CLASS	SUBCLASS (ONE SUBCLASS PER BLOCK)				
370	329				

☐ Claims renumbered in the same order as presented by applicant ☐ CPA ☐ T.D. ☐ R.1.47

Final	Original	Final	Original	Final	Original	Final	Original	Final	Original	Final	Original	Final	Original	Final	Original
1	1		17	28	33										
2	2		18	29	34										
3	3		19												
4	4		20												
5	5	16	21												
6	6	17	22												
7	7	18	23												
8	8	19	24												
9	9	20	25												
10	10	21	26												
11	11	22	27												
12	12	23	28												
13	13	24	29												
14	14	25	30												
	15	26	31												
15	16	27	32												

/A.S.H./ Examiner.Art Unit 3687 (Assistant Examiner)	08/09/2011 (Date)	**Total Claims Allowed:** 29	
/MATTHEW GART/ Supervisory Patent Examiner.Art Unit 3687 (Primary Examiner)	08/15/2011 (Date)	O.G. Print Claim(s) 1	O.G. Print Figure 2

U.S. Patent and Trademark Office

Part of Paper No. 20110809

PART B - FEE(S) TRANSMITTAL

Complete and send this form, together with applicable fee(s), to: Mail **Mail Stop ISSUE FEE**
Commissioner for Patents
P.O. Box 1450
Alexandria, Virginia 22313-1450
or Fax (571)-273-2885

INSTRUCTIONS: This form should be used for transmitting the ISSUE FEE and PUBLICATION FEE (if required). Blocks 1 through 5 should be completed where appropriate. All further correspondence including the Patent, advance orders and notification of maintenance fees will be mailed to the current correspondence address as indicated unless corrected below or directed otherwise in Block 1, by (a) specifying a new correspondence address; and/or (b) indicating a separate "FEE ADDRESS" for maintenance fee notifications.

CURRENT CORRESPONDENCE ADDRESS (Note: Use Block 1 for any change of address)

21005 7590 11/17/2011
HAMILTON, BROOK, SMITH & REYNOLDS, P.C.
530 VIRGINIA ROAD
P.O. BOX 9133
CONCORD, MA 01742-9133

Note: A certificate of mailing can only be used for domestic mailings of the Fee(s) Transmittal. This certificate cannot be used for any other accompanying papers. Each additional paper, such as an assignment or formal drawing, must have its own certificate of mailing or transmission.

Certificate of Mailing or Transmission
I hereby certify that this Fee(s) Transmittal is being deposited with the United States Postal Service with sufficient postage for first class mail in an envelope addressed to the Mail Stop ISSUE FEE address above, or being facsimile transmitted to the USPTO (571) 273-2885, on the date indicated below.

(Depositor's name)
(Signature)
(Date)

APPLICATION NO.	FILING DATE	FIRST NAMED INVENTOR	ATTORNEY DOCKET NO.	CONFIRMATION NO.
12/364,823	02/03/2009	James Arthur Proctor JR.	4394.1003-000	4791

TITLE OF INVENTION: VISUAL IDENTIFICATION INFORMATION USED AS CONFIRMATION IN A WIRELESS COMMUNICATION

APPLN. TYPE	SMALL ENTITY	ISSUE FEE DUE	PUBLICATION FEE DUE	PREV. PAID ISSUE FEE	TOTAL FEE(S) DUE	DATE DUE
nonprovisional	YES	$870	$300	$0	$1170	02/17/2012

EXAMINER	ART UNIT	CLASS-SUBCLASS
HAYLES, ASHFORD S	3687	705-021000

1. Change of correspondence address or indication of "Fee Address" (37 CFR 1.363).
- ☐ Change of correspondence address (or Change of Correspondence Address form PTO/SB/122) attached.
- ☐ "Fee Address" indication (or "Fee Address" Indication form PTO/SB/47; Rev 03-02 or more recent) attached. **Use of a Customer Number is required.**

2. For printing on the patent front page, list Hamilton, Brook, Smith & Reynolds, P.C.
(1) the names of up to 3 registered patent attorneys or agents OR, alternatively,
(2) the name of a single firm (having as a member a registered attorney or agent) and the names of up to 2 registered patent attorneys or agents. If no name is listed, no name will be printed.
1 _____
2 _____
3 _____

3. ASSIGNEE NAME AND RESIDENCE DATA TO BE PRINTED ON THE PATENT (print or type)

PLEASE NOTE: Unless an assignee is identified below, no assignee data will appear on the patent. If an assignee is identified below, the document has been filed for recordation as set forth in 37 CFR 3.11. Completion of this form is NOT a substitute for filing an assignment.

(A) NAME OF ASSIGNEE (B) RESIDENCE: (CITY and STATE OR COUNTRY)

Please check the appropriate assignee category or categories (will not be printed on the patent) : ☐ Individual ☐ Corporation or other private group entity ☐ Government

4a. The following fee(s) are submitted:
- ☒ Issue Fee
- ☒ Publication Fee (No small entity discount permitted)
- ☐ Advance Order - # of Copies _____

4b. Payment of Fee(s): **(Please first reapply any previously paid issue fee shown above)**
- ☐ A check is enclosed.
- ☐ Payment by credit card. Form PTO-2038 is attached.
- ☒ The Director is hereby authorized to charge the required fee(s), any deficiency, or credit any overpayment, to Deposit Account Number 080380 (enclose an extra copy of this form).

5. **Change in Entity Status** (from status indicated above)
- ☐ a. Applicant claims SMALL ENTITY status. See 37 CFR 1.27.
- ☐ b. Applicant is no longer claiming SMALL ENTITY status. See 37 CFR 1.27(g)(2).

NOTE: The Issue Fee and Publication Fee (if required) will not be accepted from anyone other than the applicant; a registered attorney or agent; or the assignee or other party in interest as shown by the records of the United States Patent and Trademark Office.

Authorized Signature _____ Date 4/30/11

Typed or printed name David J. Thibodeau, Jr. Registration No. 31,671

This collection of information is required by 37 CFR 1.311. The information is required to obtain or retain a benefit by the public which is to file (and by the USPTO to process) an application. Confidentiality is governed by 35 U.S.C. 122 and 37 CFR 1.14. This collection is estimated to take 12 minutes to complete, including gathering, preparing, and submitting the completed application form to the USPTO. Time will vary depending upon the individual case. Any comments on the amount of time you require to complete this form and/or suggestions for reducing this burden, should be sent to the Chief Information Officer, U.S. Patent and Trademark Office, U.S. Department of Commerce, P.O. Box 1450, Alexandria, Virginia 22313-1450. DO NOT SEND FEES OR COMPLETED FORMS TO THIS ADDRESS. SEND TO: Commissioner for Patents, P.O. Box 1450, Alexandria, Virginia 22313-1450.

Under the Paperwork Reduction Act of 1995, no persons are required to respond to a collection of information unless it displays a valid OMB control number.

Electronic Patent Application Fee Transmittal

Application Number:	12364823
Filing Date:	03-Feb-2009
Title of Invention:	VISUAL IDENTIFICATION INFORMATION USED AS CONFIRMATION IN A WIRELESS COMMUNICATION
First Named Inventor/Applicant Name:	James Arthur Proctor
Filer:	David J. Thibodeau/Nicole Isabelle
Attorney Docket Number:	4394.1003-000

Filed as Small Entity

Utility under 35 USC 111(a) Filing Fees

Description	Fee Code	Quantity	Amount	Sub-Total in USD($)
Basic Filing:				
Pages:				
Claims:				
Miscellaneous-Filing:				
Petition:				
Patent-Appeals-and-Interference:				
Post-Allowance-and-Post-Issuance:				
Utility Appl issue fee	2501	1	870	870
Publ. Fee- early, voluntary, or normal	1504	1	300	300

Description	Fee Code	Quantity	Amount	Sub-Total in USD($)
Extension-of-Time:				
Miscellaneous:				
		Total in USD ($)		**1170**

Electronic Acknowledgement Receipt

EFS ID:	11510579
Application Number:	12364823
International Application Number:	
Confirmation Number:	4791
Title of Invention:	VISUAL IDENTIFICATION INFORMATION USED AS CONFIRMATION IN A WIRELESS COMMUNICATION
First Named Inventor/Applicant Name:	James Arthur Proctor
Customer Number:	21005
Filer:	David J. Thibodeau/Nicole Isabelle
Filer Authorized By:	David J. Thibodeau
Attorney Docket Number:	4394.1003-000
Receipt Date:	30-NOV-2011
Filing Date:	03-FEB-2009
Time Stamp:	15:57:52
Application Type:	Utility under 35 USC 111(a)

Payment information:

Submitted with Payment	yes
Payment Type	Deposit Account
Payment was successfully received in RAM	$1170
RAM confirmation Number	2665
Deposit Account	080380
Authorized User	
The Director of the USPTO is hereby authorized to charge indicated fees and credit any overpayment as follows:	
Charge any Additional Fees required under 37 C.F.R. Section 1.21 (Miscellaneous fees and charges)	

File Listing:

Document Number	Document Description	File Name	File Size(Bytes)/ Message Digest	Multi Part /.zip	Pages (if appl.)
1	Issue Fee Payment (PTO-85B)	43941003000IF.PDF	150975 fcb412301495922c6aaf61b8474c1b25e04a4a57	no	1
Warnings:					
Information:					
2	Fee Worksheet (SB06)	fee-info.pdf	31795 91536a44ec7b2b89e595a2c51a51c97dc9f961a5	no	2
Warnings:					
Information:					
		Total Files Size (in bytes):	182770		

This Acknowledgement Receipt evidences receipt on the noted date by the USPTO of the indicated documents, characterized by the applicant, and including page counts, where applicable. It serves as evidence of receipt similar to a Post Card, as described in MPEP 503.

New Applications Under 35 U.S.C. 111
If a new application is being filed and the application includes the necessary components for a filing date (see 37 CFR 1.53(b)-(d) and MPEP 506), a Filing Receipt (37 CFR 1.54) will be issued in due course and the date shown on this Acknowledgement Receipt will establish the filing date of the application.

National Stage of an International Application under 35 U.S.C. 371
If a timely submission to enter the national stage of an international application is compliant with the conditions of 35 U.S.C. 371 and other applicable requirements a Form PCT/DO/EO/903 indicating acceptance of the application as a national stage submission under 35 U.S.C. 371 will be issued in addition to the Filing Receipt, in due course.

New International Application Filed with the USPTO as a Receiving Office
If a new international application is being filed and the international application includes the necessary components for an international filing date (see PCT Article 11 and MPEP 1810), a Notification of the International Application Number and of the International Filing Date (Form PCT/RO/105) will be issued in due course, subject to prescriptions concerning national security, and the date shown on this Acknowledgement Receipt will establish the international filing date of the application.

UNITED STATES PATENT AND TRADEMARK OFFICE

UNITED STATES DEPARTMENT OF COMMERCE
United States Patent and Trademark Office
Address: COMMISSIONER FOR PATENTS
P.O. Box 1450
Alexandria, Virginia 22313-1450
www.uspto.gov

APPLICATION NO.	ISSUE DATE	PATENT NO.	ATTORNEY DOCKET NO.	CONFIRMATION NO.
12/364,823	01/03/2012	8090616	4394.1003-000	4791

21005 7590 12/14/2011
HAMILTON, BROOK, SMITH & REYNOLDS, P.C.
530 VIRGINIA ROAD
P.O. BOX 9133
CONCORD, MA 01742-9133

ISSUE NOTIFICATION

The projected patent number and issue date are specified above.

Determination of Patent Term Adjustment under 35 U.S.C. 154 (b)
(application filed on or after May 29, 2000)

The Patent Term Adjustment is 142 day(s). Any patent to issue from the above-identified application will include an indication of the adjustment on the front page.

If a Continued Prosecution Application (CPA) was filed in the above-identified application, the filing date that determines Patent Term Adjustment is the filing date of the most recent CPA.

Applicant will be able to obtain more detailed information by accessing the Patent Application Information Retrieval (PAIR) WEB site (http://pair.uspto.gov).

Any questions regarding the Patent Term Extension or Adjustment determination should be directed to the Office of Patent Legal Administration at (571)-272-7702. Questions relating to issue and publication fee payments should be directed to the Application Assistance Unit (AAU) of the Office of Data Management (ODM) at (571)-272-4200.

APPLICANT(s) (Please see PAIR WEB site http://pair.uspto.gov for additional applicants):

James Arthur Proctor JR., Melbourne Beach, FL;
James Arthur Proctor III, Indialantic, FL;

IR103 (Rev. 10/09)

PTO/AIA/80 (07-12)
Approved for use through 11/30/2014. OMB 0651-0035
U.S. Patent and Trademark Office; U.S DEPARTMENT OF COMMERCE
Under the Paperwork Reduction Act of 1995, no persons are required to respond to a collection of information unless it displays a valid OMB control number.

POWER OF ATTORNEY TO PROSECUTE APPLICATIONS BEFORE THE USPTO

I hereby revoke all previous powers of attorney given in the application identified in the attached statement under 37 CFR 3.73(c).

I hereby appoint:

[■] Practitioners associated with Customer Number: 24267

OR

[ ] Practitioner(s) named below (if more than ten patent practitioners are to be named, then a customer number must be used):

Name	Registration Number	Name	Registration Number

As attorney(s) or agent(s) to represent the undersigned before the United States Patent and Trademark Office (USPTO) in connection with any and all patent applications assigned only to the undersigned according to the USPTO assignment records or assignments documents attached to this form in accordance with 37 CFR 3.73(c).

Please change the correspondence address for the application identified in the attached statement under 37 CFR 3.73(c) to:

[✓] The address associated with Customer Number: 24267

OR

[ ]			
Firm or Individual Name			
Address			
City		State	Zip
Country			
Telephone		Email	

Assignee Name and Address: Proxicom Wireless, LLC
258 Seaview Street
Melbourne Beach, FL 32951

A copy of this form, together with a statement under 37 CFR 3.73(c) (Form PTO/AIA/96 or equivalent) is required to be Filed in each application in which this form is used. The statement under 37 CFR 3.73(c) may be completed by one of The practitioners appointed in this form, and must identify the application in which this Power of Attorney is to be filed.

SIGNATURE of Assignee of Record

The individual whose signature and title is supplied below is authorized to act on behalf of the assignee

Signature		Date	5-31-2013
Name	James A. Proctor, Jr.	Telephone	321-252-8411
Title	Managing Director, Proxicom Wireless, LLC		

This collection of information is required by 37 CFR 1.31, 1.32 and 1.33. The information is required to obtain or retain a benefit by the public which is to file (and by the USPTO to process) an application. Confidentiality is governed by 35 U.S.C. 122 and 37 CFR 1.11 and 1.14. This collection is estimated to take 3 minutes to complete, including gathering, preparing, and submitting the completed application form to the USPTO. Time will vary depending upon the individual case. Any comments on the amount of time you require to complete this form and/or suggestions for reducing this burden, should be sent to the Chief Information Officer, U.S. Patent and Trademark Office, U.S. Department of Commerce, P.O. Box 1450, Alexandria, VA 22313-1450. DO NOT SEND FEES OR COMPLETED FORMS TO THIS ADDRESS. **SEND TO: Commissioner for Patents, P.O. Box 1450, Alexandria, VA 22313-1450.**

If you need assistance in completing the form, call 1-800-PTO-9199 and select option 2.

Privacy Act Statement

The **Privacy Act of 1974 (P.L. 93-579)** requires that you be given certain information in connection with your submission of the attached form related to a patent application or patent. Accordingly, pursuant to the requirements of the Act, please be advised that: (1) the general authority for the collection of this information is 35 U.S.C. 2(b)(2); (2) furnishing of the information solicited is voluntary; and (3) the principal purpose for which the information is used by the U.S. Patent and Trademark Office is to process and/or examine your submission related to a patent application or patent. If you do not furnish the requested information, the U.S. Patent and Trademark Office may not be able to process and/or examine your submission, which may result in termination of proceedings or abandonment of the application or expiration of the patent.

The information provided by you in this form will be subject to the following routine uses:

1. The information on this form will be treated confidentially to the extent allowed under the Freedom of Information Act (5 U.S.C. 552) and the Privacy Act (5 U.S.C 552a). Records from this system of records may be disclosed to the Department of Justice to determine whether disclosure of these records is required by the Freedom of Information Act.
2. A record from this system of records may be disclosed, as a routine use, in the course of presenting evidence to a court, magistrate, or administrative tribunal, including disclosures to opposing counsel in the course of settlement negotiations.
3. A record in this system of records may be disclosed, as a routine use, to a Member of Congress submitting a request involving an individual, to whom the record pertains, when the individual has requested assistance from the Member with respect to the subject matter of the record.
4. A record in this system of records may be disclosed, as a routine use, to a contractor of the Agency having need for the information in order to perform a contract. Recipients of information shall be required to comply with the requirements of the Privacy Act of 1974, as amended, pursuant to 5 U.S.C. 552a(m).
5. A record related to an International Application filed under the Patent Cooperation Treaty in this system of records may be disclosed, as a routine use, to the International Bureau of the World Intellectual Property Organization, pursuant to the Patent Cooperation Treaty.
6. A record in this system of records may be disclosed, as a routine use, to another federal agency for purposes of National Security review (35 U.S.C. 181) and for review pursuant to the Atomic Energy Act (42 U.S.C. 218(c)).
7. A record from this system of records may be disclosed, as a routine use, to the Administrator, General Services, or his/her designee, during an inspection of records conducted by GSA as part of that agency's responsibility to recommend improvements in records management practices and programs, under authority of 44 U.S.C. 2904 and 2906. Such disclosure shall be made in accordance with the GSA regulations governing inspection of records for this purpose, and any other relevant (*i.e.*, GSA or Commerce) directive. Such disclosure shall not be used to make determinations about individuals.
8. A record from this system of records may be disclosed, as a routine use, to the public after either publication of the application pursuant to 35 U.S.C. 122(b) or issuance of a patent pursuant to 35 U.S.C. 151. Further, a record may be disclosed, subject to the limitations of 37 CFR 1.14, as a routine use, to the public if the record was filed in an application which became abandoned or in which the proceedings were terminated and which application is referenced by either a published application, an application open to public inspection or an issued patent.
9. A record from this system of records may be disclosed, as a routine use, to a Federal, State, or local law enforcement agency, if the USPTO becomes aware of a violation or potential violation of law or regulation.

Electronic Acknowledgement Receipt

EFS ID:	23509279
Application Number:	12364823
International Application Number:	
Confirmation Number:	4791
Title of Invention:	VISUAL IDENTIFICATION INFORMATION USED AS CONFIRMATION IN A WIRELESS COMMUNICATION
First Named Inventor/Applicant Name:	James Arthur Proctor
Customer Number:	21005
Filer:	David J. Thibodeau/stephany deblois
Filer Authorized By:	David J. Thibodeau
Attorney Docket Number:	4394.1003-000
Receipt Date:	16-SEP-2015
Filing Date:	03-FEB-2009
Time Stamp:	14:01:26
Application Type:	Utility under 35 USC 111(a)

Payment information:

Submitted with Payment	no

File Listing:

Document Number	Document Description	File Name	File Size(Bytes)/ Message Digest	Multi Part /.zip	Pages (if appl.)
1	Assignee showing of ownership per 37 CFR 3.73	2952017.PDF	118221 64c52d46857d8c3220a35621e985d45ea02840e5	no	3

Warnings:

Information:

2	Power of Attorney	2648024.PDF	65012 25aedeebab53a3b1be07773491c6c0fabdb3837b	no	2
Warnings:					
Information:					
		Total Files Size (in bytes):	183233		

This Acknowledgement Receipt evidences receipt on the noted date by the USPTO of the indicated documents, characterized by the applicant, and including page counts, where applicable. It serves as evidence of receipt similar to a Post Card, as described in MPEP 503.

New Applications Under 35 U.S.C. 111
If a new application is being filed and the application includes the necessary components for a filing date (see 37 CFR 1.53(b)-(d) and MPEP 506), a Filing Receipt (37 CFR 1.54) will be issued in due course and the date shown on this Acknowledgement Receipt will establish the filing date of the application.

National Stage of an International Application under 35 U.S.C. 371
If a timely submission to enter the national stage of an international application is compliant with the conditions of 35 U.S.C. 371 and other applicable requirements a Form PCT/DO/EO/903 indicating acceptance of the application as a national stage submission under 35 U.S.C. 371 will be issued in addition to the Filing Receipt, in due course.

New International Application Filed with the USPTO as a Receiving Office
If a new international application is being filed and the international application includes the necessary components for an international filing date (see PCT Article 11 and MPEP 1810), a Notification of the International Application Number and of the International Filing Date (Form PCT/RO/105) will be issued in due course, subject to prescriptions concerning national security, and the date shown on this Acknowledgement Receipt will establish the international filing date of the application.

PTO/AIA/96 (08-12)
Approved for use through 01/31/2013. OMB 0651-0031
U.S. Patent and Trademark Office;U.S. DEPARTMENT OF COMMERCE
Under the Paperwork Reduction Act of1995, no persons arerequired to respond to a collection of information unless it displays a valid OMB control number.

STATEMENT UNDER 37 CFR 3.73(c)

Applicant/Patent Owner: Proxicom Wireless, LLC

Application No./Patent No.: 12/364,823 Filed/Issue Date: 02/03/2009

Titled: VISUAL IDENTIFICATION INFORMATION USED AS CONFIRMATION IN A WIRELESS COMMUNICATION

Proxicom Wireless, LLC, a corporation

(Name of Assignee) (Type of Assignee, e.g., corporation, partnership, university, government agency, etc.)

states that, for the patent application/patent identified above, it is (choose **one** of options 1, 2, 3 or 4 below):

1. ☑ The assignee of the entire right, title, and interest.

2. ☐ An assignee of less than the entire right, title, and interest (check applicable box):

☐ The extent (by percentage) of its ownership interest is _____%. Additional Statement(s) by the owners holding the balance of the interest must be submitted to account for 100% of the ownership interest.

☐ There are unspecified percentages of ownership. The other parties, including inventors, who together own the entire right, title and interest are:

Additional Statement(s) by the owner(s) holding the balance of the interest must be submitted to account for the entire right, title, and interest.

3. ☐ The assignee of an undivided interest in the entirety (a complete assignment from one of the joint inventors was made). The other parties, including inventors, who together own the entire right, title, and interest are:

Additional Statement(s) by the owner(s) holding the balance of the interest must be submitted to account for the entire right, title, and interest.

4. ☐ The recipient, via a court proceeding or the like (*e.g.*, bankruptcy, probate), of an undivided interest in the entirety (a complete transfer of ownership interest was made). The certified document(s) showing the transfer is attached.

The interest identified in option 1, 2 or 3 above (not option 4) is evidenced by either (choose **one** of options A or B below):

A. ☑ An assignment from the inventor(s) of the patent application/patent identified above. The assignment was recorded in the United States Patent and Trademark Office at Reel 027591, Frame 0866, or for which a copy thereof is attached.

B. ☐ A chain of title from the inventor(s), of the patent application/patent identified above, to the current assignee as follows:

1. From: _____ To: _____

The document was recorded in the United States Patent and Trademark Office at

Reel _____, Frame _____, or for which a copy thereof is attached.

2. From: _____ To: _____

The document was recorded in the United States Patent and Trademark Office at

Reel _____, Frame _____, or for which a copy thereof is attached.

This collection of information is required by37 CFR3.73(b). The information is required toobtain or retain a benefit by the public which is to file (and by the USPTO to process) an application. Confidentialityis governed by35 U.S.C. 122and 37 CFR1.11 and1.14. Thiscollection is estimated to take 12 minutes to complete, including gathering, preparing, and submittingthe completed application form to the USPTO.Time will vary depending upon the individual case. Any comments on the amount of time you require to complete this form and/or suggestions for reducing this burden, should be sent tothe Chief Information Officer, U.S. Patent and Trademark Office, U.S. Department of Commerce, P.O. Box 1450, Alexandria, VA 22313-1450. DO NOT SEND FEES OR COMPLETED FORMS TO THIS ADDRESS.**SEND TO: Commissioner for Patents, P.O. Box 1450, Alexandria, VA 22313-1450**

If you need assistance in completing the form, call 1-800-PTO-9199 and select option 2.

Under the Paperwork Reduction Act of 1995, no persons are required to respond to a collection of information unless it displays a valid OMB control number.

STATEMENT UNDER 37 CFR 3.73(c)

3. From: _____ To: _____

The document was recorded in the United States Patent and Trademark Office at

Reel _____, Frame _____, or for which a copy thereof is attached.

4. From: _____ To: _____

The document was recorded in the United States Patent and Trademark Office at

Reel _____, Frame _____, or for which a copy thereof is attached.

5. From: _____ To: _____

The document was recorded in the United States Patent and Trademark Office at

Reel _____, Frame _____, or for which a copy thereof is attached.

6. From: _____ To: _____

The document was recorded in the United States Patent and Trademark Office at

Reel _____, Frame _____, or for which a copy thereof is attached.

☐ Additional documents in the chain of title are listed on a supplemental sheet(s).

☐ As required by 37 CFR 3.73(c)(1)(i), the documentary evidence of the chain of title from the original owner to the assignee was, or concurrently is being, submitted for recordation pursuant to 37 CFR 3.11.

[NOTE: A separate copy (i.e., a true copy of the original assignment document(s)) must be submitted to Assignment Division in accordance with 37 CFR Part 3, to record the assignment in the records of the USPTO. See MPEP 302.08]

The undersigned (whose title is supplied below) is authorized to act on behalf of the assignee.

/David J Thibodeau Jr Reg No 31671/	9/16/2015
Signature	Date
David J. Thibodeau, Jr.	Attorney of Record, Reg No 31671
Printed or Typed Name	Title or Registration Number

Privacy Act Statement

The **Privacy Act of 1974 (P.L. 93-579)** requires that yoube given certain informationin connection with your submission of the attached form related to a patent application or patent. Accordingly, pursuant to the requirements of the Act, pleasebe advised that: (1) the general authority forthe collection of thisinformation is 35 U.S.C. 2(b)(2); (2) furnishing of the information solicited is voluntary; and(3) the principal purpose forwhich the information isused by the U.S. Patent and Trademark Office is to process and/or examine your submission related to a patent applicationor patent. If you do not furnish the requested information,the U.S. Patent and Trademark Office may not be able to process and/or examineyour submission,which may result in termination of proceedings or abandonment of the applicationor expiration of the patent.

The informationprovided by you in this form will be subject to the following routine uses:

1. The information on this form will be treated confidentially to the extent allowed under the Freedom of Information Act (5 U.S.C. 552) and the Privacy Act (5 U.S.C 552a). Records from this system of records may be disclosed to the Department of Justice to determine whether disclosure of these records is required by the Freedom of Information Act.
2. A record from this system of records may be disclosed, as a routine use, in the course of presenting evidence to a court, magistrate, or administrative tribunal, including disclosures to opposing counsel in the course of settlement negotiations.
3. A record in this system of records may be disclosed, as a routine use, to a Member of Congress submitting a request involving an individual, to whom the record pertains, when the individual has requested assistance from the Member with respect to the subject matter of the record.
4. A record in this system of records may be disclosed, as a routine use, to a contractor of the Agency having need for the informationin order to perform a contract. Recipients of information shall be required to comply with the requirements of the Privacy Act of 1974, as amended, pursuant to 5 U.S.C. 552a(m).
5. A record related to an InternationalApplication filed under the Patent Cooperation Treaty in this system of records may be disclosed, as a routine use, to the International Bureau of the World Intellectual Property Organization, pursuant to the Patent Cooperation Treaty.
6. A record in this system of records may be disclosed, as a routine use, to another federal agency for purposes of National Security review (35 U.S.C. 181) and for review pursuant to the Atomic Energy Act (42 U.S.C. 218(c)).
7. A record from this system of records may be disclosed, as a routine use, to the Administrator, General Services, or his/her designee, during an inspection of records conducted by GSA as part of that agency's responsibility to recommend improvements in records management practices and programs, under authority of 44 U.S.C. 2904 and 2906. Such disclosure shall be made in accordance with the GSA regulations governing inspection of records for this purpose, and any other relevant (*i.e.*, GSA or Commerce) directive. Such disclosure shall not be used to make determinations about individuals.
8. A record from this system of records may be disclosed, as a routine use, to the public after either publication of the application pursuant to 35 U.S.C. 122(b) or issuance of a patent pursuant to 35 U.S.C. 151. Further, arecord may be disclosed, subject to the limitations of 37 CFR 1.14, as a routine use, to the public if the record was filed in an application which became abandoned or in which the proceedings were terminated and which application is referenced by either a published application, an application open to public inspection or an issued patent.
9. A record from thissystem of records may be disclosed, as a routine use, to a Federal, State, or local law enforcement agency, if the USPTO becomes aware of a violation or potential violation of law or regulation.

UNITED STATES PATENT AND TRADEMARK OFFICE

UNITED STATES DEPARTMENT OF COMMERCE
United States Patent and Trademark Office
Address: COMMISSIONER FOR PATENTS
P.O. Box 1450
Alexandria, Virginia 22313-1450
www.uspto.gov

APPLICATION NUMBER	FILING OR 371(C) DATE	FIRST NAMED APPLICANT	ATTY. DOCKET NO./TITLE
12/364,823	02/03/2009	James Arthur Proctor JR.	

CONFIRMATION NO. 4791

POA ACCEPTANCE LETTER

24267
CESARI AND MCKENNA, LLP
88 BLACK FALCON AVENUE
BOSTON, MA 02210

OC000000077580469

Date Mailed: 09/22/2015

NOTICE OF ACCEPTANCE OF POWER OF ATTORNEY

This is in response to the Power of Attorney filed 09/16/2015.

The Power of Attorney in this application is accepted. Correspondence in this application will be mailed to the above address as provided by 37 CFR 1.33.

Questions about the contents of this notice and the requirements it sets forth should be directed to the Office of Data Management, Application Assistance Unit, at **(571) 272-4000** or **(571) 272-4200** or **1-888-786-0101**.

/dtvernon/

UNITED STATES PATENT AND TRADEMARK OFFICE

UNITED STATES DEPARTMENT OF COMMERCE
United States Patent and Trademark Office
Address: COMMISSIONER FOR PATENTS
P.O. Box 1450
Alexandria, Virginia 22313-1450
www.uspto.gov

APPLICATION NUMBER	FILING OR 371(C) DATE	FIRST NAMED APPLICANT	ATTY. DOCKET NO./TITLE
12/364,823	02/03/2009	James Arthur Proctor JR.	4394.1003-000

CONFIRMATION NO. 4791

POWER OF ATTORNEY NOTICE

21005
HAMILTON, BROOK, SMITH & REYNOLDS, P.C.
530 VIRGINIA ROAD
P.O. BOX 9133
CONCORD, MA 01742-9133

OC000000077580453

Date Mailed: 09/22/2015

NOTICE REGARDING CHANGE OF POWER OF ATTORNEY

This is in response to the Power of Attorney filed 09/16/2015.

- The Power of Attorney to you in this application has been revoked by the assignee who has intervened as provided by 37 CFR 3.71. Future correspondence will be mailed to the new address of record(37 CFR 1.33).

Questions about the contents of this notice and the requirements it sets forth should be directed to the Office of Data Management, Application Assistance Unit, at **(571) 272-4000** or **(571) 272-4200** or **1-888-786-0101**.

/dtvernon/

PTO/SB/80 (11-08)
Approved for use through 11/30/2011. OMB 0651-0035
U.S. Patent and Trademark Office; U.S. DEPARTMENT OF COMMERCE
Under the Paperwork Reduction Act of 1995, no persons are required to respond to a collection of information unless it displays a valid OMB control number.

POWER OF ATTORNEY TO PROSECUTE APPLICATIONS BEFORE THE USPTO

I hereby revoke all previous powers of attorney given in the application identified in the attached statement under 37 CFR 3.73(b).

I hereby appoint:

☑ Practitioners associated with the Customer Number: 86012

OR

☐ Practitioner(s) named below (if more than ten patent practitioners are to be named, then a customer number must be used):

Name	Registration Number	Name	Registration Number

as attorney(s) or agent(s) to represent the undersigned before the United States Patent and Trademark Office (USPTO) in connection with any and all patent applications assigned only to the undersigned according to the USPTO assignment records or assignment documents attached to this form in accordance with 37 CFR 3.73(b).

Please change the correspondence address for the application identified in the attached statement under 37 CFR 3.73(b) to:

☑ The address associated with Customer Number: 86012

OR

☐ Firm or Individual Name	VLP Law Group LLP		
Address			
City		State	Zip
Country			
Telephone		Email	

Assignee Name and Address:

Proxicom Wireless LLC
1680 N. Riverside Drive
Indialantic, FL 32903

A copy of this form, together with a statement under 37 CFR 3.73(b) (Form PTO/SB/96 or equivalent) is required to be filed in each application in which this form is used. The statement under 37 CFR 3.73(b) may be completed by one of the practitioners appointed in this form if the appointed practitioner is authorized to act on behalf of the assignee, and must identify the application in which this Power of Attorney is to be filed.

SIGNATURE of Assignee of Record

The individual whose signature and title is supplied below is authorized to act on behalf of the assignee

Signature	James A. Proctor	Date	8/17/2017
Name	James A. Proctor	Telephone	321.252.8411
Title	Managing Director		

This collection of information is required by 37 CFR 1.31, 1.32 and 1.33. The information is required to obtain or retain a benefit by the public which is to file (and by the USPTO to process) an application. Confidentiality is governed by 35 U.S.C. 122 and 37 CFR 1.11 and 1.14. This collection is estimated to take 3 minutes to complete, including gathering, preparing, and submitting the completed application form to the USPTO. Time will vary depending upon the individual case. Any comments on the amount of time you require to complete this form and/or suggestions for reducing this burden, should be sent to the Chief Information Officer, U.S. Patent and Trademark Office, U.S. Department of Commerce, P.O. Box 1450, Alexandria, VA 22313-1450. DO NOT SEND FEES OR COMPLETED FORMS TO THIS ADDRESS. **SEND TO: Commissioner for Patents, P.O. Box 1450, Alexandria, VA 22313-1450.**

If you need assistance in completing the form, call 1-800-PTO-9199 and select option 2.

Electronic Acknowledgement Receipt

EFS ID:	32083717
Application Number:	12364823
International Application Number:	
Confirmation Number:	4791
Title of Invention:	VISUAL IDENTIFICATION INFORMATION USED AS CONFIRMATION IN A WIRELESS COMMUNICATION
First Named Inventor/Applicant Name:	James Arthur Proctor
Customer Number:	24267
Filer:	David J. Thibodeau/Elisabeth Smith
Filer Authorized By:	David J. Thibodeau
Attorney Docket Number:	111054-0001U2
Receipt Date:	18-MAR-2018
Filing Date:	03-FEB-2009
Time Stamp:	12:21:57
Application Type:	Utility under 35 USC 111(a)

Payment information:

Submitted with Payment	no

File Listing:

Document Number	Document Description	File Name	File Size(Bytes)/ Message Digest	Multi Part /.zip	Pages (if appl.)
1	Assignee showing of ownership per 37 CFR 3.73	111054-0001U2_TPO_SB96.pdf	422963 d09a66ea8974625de4be0d11b50d67416b6ac651	no	2

Warnings:

Information:					
2	Power of Attorney	111054_Proxicom_SB80.pdf	207947 36ce3a0ecee5c86119d82568cda2ec73a838a5a0	no	1
Warnings:					
Information:					
			Total Files Size (in bytes):	630910	

This Acknowledgement Receipt evidences receipt on the noted date by the USPTO of the indicated documents, characterized by the applicant, and including page counts, where applicable. It serves as evidence of receipt similar to a Post Card, as described in MPEP 503.

New Applications Under 35 U.S.C. 111
If a new application is being filed and the application includes the necessary components for a filing date (see 37 CFR 1.53(b)-(d) and MPEP 506), a Filing Receipt (37 CFR 1.54) will be issued in due course and the date shown on this Acknowledgement Receipt will establish the filing date of the application.
National Stage of an International Application under 35 U.S.C. 371
If a timely submission to enter the national stage of an international application is compliant with the conditions of 35 U.S.C. 371 and other applicable requirements a Form PCT/DO/EO/903 indicating acceptance of the application as a national stage submission under 35 U.S.C. 371 will be issued in addition to the Filing Receipt, in due course.
New International Application Filed with the USPTO as a Receiving Office
If a new international application is being filed and the international application includes the necessary components for an international filing date (see PCT Article 11 and MPEP 1810), a Notification of the International Application Number and of the International Filing Date (Form PCT/RO/105) will be issued in due course, subject to prescriptions concerning national security, and the date shown on this Acknowledgement Receipt will establish the international filing date of the application.

PTO/SB/96 (07-09)
Approved for use through 07/31/2012. OMB 0651-0031
U.S. Patent and Trademark Office; U.S. DEPARTMENT OF COMMERCE
Under the Paperwork Reduction Act of 1995, no persons are required to respond to a collection of information unless it displays a valid OMB control number.

STATEMENT UNDER 37 CFR 3.73(b)

Applicant/Patent Owner: Proxicom Wireless, LLC

Application No./Patent No.: 8,090,616 Filed/Issue Date: 01-03-2012

Titled:
VISUAL IDENTIFICATION INFORMATION USED AS CONFIRMATION IN A WIRELESS COMMUNICATION

Proxicom Wireless, LLC, a a Corporation
(Name of Assignee) (Type of Assignee, e.g., corporation, partnership, university, government agency, etc.

states that it is:

1. ☒ the assignee of the entire right, title, and interest in;

2. ☐ an assignee of less than the entire right, title, and interest in
(The extent (by percentage) of its ownership interest is _____ %); or

3. ☐ the assignee of an undivided interest in the entirety of (a complete assignment from one of the joint inventors was made)

the patent application/patent identified above, by virtue of either:

A. ☒ An assignment from the inventor(s) of the patent application/patent identified above. The assignment was recorded in the United States Patent and Trademark Office at Reel 027591, Frame 0866, or for which a copy therefore is attached.

OR

B. ☐ A chain of title from the inventor(s), of the patent application/patent identified above, to the current assignee as follows:

1. From: _____ To: _____
The document was recorded in the United States Patent and Trademark Office at
Reel _____, Frame _____, or for which a copy thereof is attached.

2. From: _____ To: _____
The document was recorded in the United States Patent and Trademark Office at
Reel _____, Frame _____, or for which a copy thereof is attached.

3. From: _____ To: _____
The document was recorded in the United States Patent and Trademark Office at
Reel _____, Frame _____, or for which a copy thereof is attached.

☐ Additional documents in the chain of title are listed on a supplemental sheet(s).

☒ As required by 37 CFR 3.73(b)(1)(i), the documentary evidence of the chain of title from the original owner to the assignee was, or concurrently is being, submitted for recordation pursuant to 37 CFR 3.11.

[NOTE: A separate copy (*i.e.*, a true copy of the original assignment document(s)) must be submitted to Assignment Division in accordance with 37 CFR Part 3, to record the assignment in the records of the USPTO. See MPEP 302.08]

The undersigned (whose title is supplied below) is authorized to act on behalf of the assignee.

/David J Thibodeau Jr Reg No 31671/	March 15 2018
Signature	Date
David J. Thibodeau, Jr.	Reg. No. 31671
Printed or Typed Name	Title

This collection of information is required by 37 CFR 3.73(b). The information is required to obtain or retain a benefit by the public which is to file (and by the USPTO to process) an application. Confidentiality is governed by 35 U.S.C. 122 and 37 CFR 1.11 and 1.14. This collection is estimated to take 12 minutes to complete, including gathering, preparing, and submitting the completed application form to the USPTO. Time will vary depending upon the individual case. Any comments on the amount of time you require to complete this form and/or suggestions for reducing this burden, should be sent to the Chief Information Officer, U.S. Patent and Trademark Office, U.S. Department of Commerce, P.O. Box 1450, Alexandria, VA 22313-1450. DO NOT SEND FEES OR COMPLETED FORMS TO THIS ADDRESS. **SEND TO: Commissioner for Patents, P.O. Box 1450, Alexandria, VA 22313-1450.**

If you need assistance in completing the form, call 1-800-PTO-9199 and select option 2.

Privacy Act Statement

The **Privacy Act of 1974 (P.L. 93-579)** requires that you be given certain information in connection with your submission of the attached form related to a patent application or patent. Accordingly, pursuant to the requirements of the Act, please be advised that: (1) the general authority for the collection of this information is 35 U.S.C. 2(b)(2); (2) furnishing of the information solicited is voluntary; and (3) the principal purpose for which the information is used by the U.S. Patent and Trademark Office is to process and/or examine your submission related to a patent application or patent. If you do not furnish the requested information, the U.S. Patent and Trademark Office may not be able to process and/or examine your submission, which may result in termination of proceedings or abandonment of the application or expiration of the patent.

The information provided by you in this form will be subject to the following routine uses:

1. The information on this form will be treated confidentially to the extent allowed under the Freedom of Information Act (5 U.S.C. 552) and the Privacy Act (5 U.S.C 552a). Records from this system of records may be disclosed to the Department of Justice to determine whether disclosure of these records is required by the Freedom of Information Act.
2. A record from this system of records may be disclosed, as a routine use, in the course of presenting evidence to a court, magistrate, or administrative tribunal, including disclosures to opposing counsel in the course of settlement negotiations.
3. A record in this system of records may be disclosed, as a routine use, to a Member of Congress submitting a request involving an individual, to whom the record pertains, when the individual has requested assistance from the Member with respect to the subject matter of the record.
4. A record in this system of records may be disclosed, as a routine use, to a contractor of the Agency having need for the information in order to perform a contract. Recipients of information shall be required to comply with the requirements of the Privacy Act of 1974, as amended, pursuant to 5 U.S.C. 552a(m).
5. A record related to an International Application filed under the Patent Cooperation Treaty in this system of records may be disclosed, as a routine use, to the International Bureau of the World Intellectual Property Organization, pursuant to the Patent Cooperation Treaty.
6. A record in this system of records may be disclosed, as a routine use, to another federal agency for purposes of National Security review (35 U.S.C. 181) and for review pursuant to the Atomic Energy Act (42 U.S.C. 218(c)).
7. A record from this system of records may be disclosed, as a routine use, to the Administrator, General Services, or his/her designee, during an inspection of records conducted by GSA as part of that agency's responsibility to recommend improvements in records management practices and programs, under authority of 44 U.S.C. 2904 and 2906. Such disclosure shall be made in accordance with the GSA regulations governing inspection of records for this purpose, and any other relevant (*i.e.*, GSA or Commerce) directive. Such disclosure shall not be used to make determinations about individuals.
8. A record from this system of records may be disclosed, as a routine use, to the public after either publication of the application pursuant to 35 U.S.C. 122(b) or issuance of a patent pursuant to 35 U.S.C. 151. Further, a record may be disclosed, subject to the limitations of 37 CFR 1.14, as a routine use, to the public if the record was filed in an application which became abandoned or in which the proceedings were terminated and which application is referenced by either a published application, an application open to public inspection or an issued patent.
9. A record from this system of records may be disclosed, as a routine use, to a Federal, State, or local law enforcement agency, if the USPTO becomes aware of a violation or potential violation of law or regulation.

UNITED STATES PATENT AND TRADEMARK OFFICE

UNITED STATES DEPARTMENT OF COMMERCE
United States Patent and Trademark Office
Address: COMMISSIONER FOR PATENTS
P.O. Box 1450
Alexandria, Virginia 22313-1450
www.uspto.gov

APPLICATION NUMBER	FILING OR 371(C) DATE	FIRST NAMED APPLICANT	ATTY. DOCKET NO./TITLE
12/364,823	02/03/2009	James Arthur Proctor JR.	111054-0001U2

CONFIRMATION NO. 4791

POWER OF ATTORNEY NOTICE

24267
CESARI AND MCKENNA, LLP
88 BLACK FALCON AVENUE
BOSTON, MA 02210

OC000000098199066

Date Mailed: 03/21/2018

NOTICE REGARDING CHANGE OF POWER OF ATTORNEY

This is in response to the Power of Attorney filed 03/18/2018.

- The Power of Attorney to you in this application has been revoked by the assignee who has intervened as provided by 37 CFR 3.71. Future correspondence will be mailed to the new address of record(37 CFR 1.33).

Questions about the contents of this notice and the requirements it sets forth should be directed to the Office of Data Management, Application Assistance Unit, at **(571) 272-4000** or **(571) 272-4200** or **1-888-786-0101**.

/sstephanos/

UNITED STATES PATENT AND TRADEMARK OFFICE

UNITED STATES DEPARTMENT OF COMMERCE
United States Patent and Trademark Office
Address: COMMISSIONER FOR PATENTS
P.O. Box 1450
Alexandria, Virginia 22313-1450
www.uspto.gov

APPLICATION NUMBER	FILING OR 371(C) DATE	FIRST NAMED APPLICANT	ATTY. DOCKET NO./TITLE
12/364,823	02/03/2009	James Arthur Proctor JR.	111054-0001U2

CONFIRMATION NO. 4791

POA ACCEPTANCE LETTER

86012
VLP Law Group LLP
555 Bryant Street
Suite 820
Palo Alto, CA 94301

OC000000098199113

Date Mailed: 03/21/2018

NOTICE OF ACCEPTANCE OF POWER OF ATTORNEY

This is in response to the Power of Attorney filed 03/18/2018.

The Power of Attorney in this application is accepted. Correspondence in this application will be mailed to the above address as provided by 37 CFR 1.33.

Questions about the contents of this notice and the requirements it sets forth should be directed to the Office of Data Management, Application Assistance Unit, at **(571) 272-4000** or **(571) 272-4200** or **1-888-786-0101**.

/sstephanos/