US010221780B2

(12) **United States Patent**
Sarder et al.

(10) **Patent No.: US 10,221,780 B2**
(45) **Date of Patent: Mar. 5, 2019**

(54) **DUAL FUEL LOCKOUT SWITCH FOR GENERATOR ENGINE**

(71) Applicant: **Chmapion Engine Technology, LLC**, Sussex, WI (US)

(72) Inventors: **Mark J. Sarder**, Waukesha, WI (US); **Aleko D. Sotiriades**, Cedarburg, WI (US); **James J. Dehn**, Brookfield, WI (US); **Leigh Jenison**, Hartland, WI (US)

(73) Assignee: **Champion Power Equipment, Inc.**, Santa Fe Springs, CA (US)

(*) Notice: Subject to any disclaimer, the term of this patent is extended or adjusted under 35 U.S.C. 154(b) by 605 days.

(21) Appl. No.: **14/738,060**

(22) Filed: **Jun. 12, 2015**

(65) **Prior Publication Data**

US 2016/0363058 A1 Dec. 15, 2016

(51) **Int. Cl.**
F02D 19/06 (2006.01)

(52) **U.S. Cl.**
CPC ***F02D 19/0613*** (2013.01); ***F02D 19/0605*** (2013.01); ***F02D 19/0647*** (2013.01); ***F02D 19/0673*** (2013.01); *Y02T 10/36* (2013.01)

(58) **Field of Classification Search**
CPC F02D 19/0613; F02D 16/0605; F02D 19/0647; Y02T 10/36
See application file for complete search history.

(56) **References Cited**

U.S. PATENT DOCUMENTS

2,722,208	A	11/1955	Conroy, Jr. et al.
3,384,059	A	5/1968	Kopa
3,412,258	A	11/1968	Satter
3,659,574	A	5/1972	Reschke et al.
3,718,000	A	2/1973	Walker
3,783,849	A	1/1974	Bramfitt
3,888,223	A	6/1975	Mondt

(Continued)

FOREIGN PATENT DOCUMENTS

CN	2060477	U	8/1990
CN	1981121	A	6/2007

OTHER PUBLICATIONS

Champion Power (Dec. & Jan. 2014). 100153 Manul. Retrieved from http://www.championpowerequipment.com/media/2400/100153_manual-english_12-4-14.pdf.*

(Continued)

Primary Examiner — Kevin A Lathers
(74) *Attorney, Agent, or Firm* — Ziolkowski Patent Solutions Group, SC

(57) **ABSTRACT**

A mechanical fuel lockout switch for a dual fuel engine includes a mechanical fuel valve actuateable between a first position and a second position to selectively control fuel flow to the dual fuel engine from a first fuel source through a first fuel line and a second fuel source through a second fuel line. The mechanical fuel lockout switch also includes a fuel lockout apparatus coupled to the mechanical fuel valve. The mechanical fuel lockout switch communicates the first fuel source to the dual fuel engine and prevents communication between the second fuel source and the dual fuel engine when the mechanical fuel valve is in the first position, and communicates the second fuel source to the dual fuel engine and interrupts the first fuel source communication with the dual fuel engine when in the second position.

15 Claims, 5 Drawing Sheets

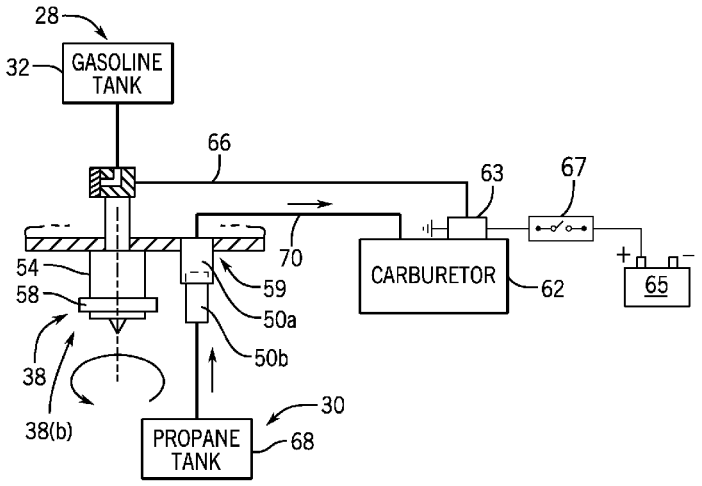

(56) **References Cited**

U.S. PATENT DOCUMENTS

4,335,697	A	6/1982	McLean	
4,372,276	A	2/1983	Bernhardsson et al.	
4,373,493	A	2/1983	Welsh	
4,450,821	A	5/1984	Venning et al.	
4,463,735	A *	8/1984	Stoltman	123/525
4,480,595	A	11/1984	Hobby et al.	
4,489,699	A	12/1984	Poehlman	
4,502,453	A	3/1985	Kabasin et al.	
4,619,240	A	10/1986	Bedford et al.	
4,628,871	A	12/1986	Glass	
4,708,094	A	11/1987	Helmich et al.	
4,895,124	A	1/1990	Bartholomew	
4,979,480	A	12/1990	Daikoku et al.	
5,092,305	A	3/1992	King	
5,161,496	A	11/1992	Matsushima et al.	
5,171,487	A	12/1992	Hudz	
5,228,423	A	7/1993	Oikawa et al.	
5,287,839	A	2/1994	Kondou et al.	
5,320,078	A	6/1994	Lorraine	
5,325,835	A	7/1994	Kimata et al.	
5,379,740	A	1/1995	Moore et al.	
5,419,291	A	5/1995	Kimata et al.	
5,438,968	A	8/1995	Johnson et al.	
5,450,832	A	9/1995	Graf	
5,611,312	A	3/1997	Swanson et al.	
5,673,670	A	10/1997	Powell et al.	
5,816,224	A	10/1998	Welsh et al.	
6,082,323	A	7/2000	Winberg	
6,213,083	B1	4/2001	Winberg	
6,223,730	B1	5/2001	Hasegawa et al.	
6,276,345	B1	8/2001	Nelson et al.	
6,401,685	B1	6/2002	Warner	
6,453,877	B1	9/2002	Lucier et al.	
6,591,817	B2	7/2003	Deutsch	
6,914,342	B1	7/2005	French	
7,905,469	B2	3/2011	Nickels et al.	
8,342,158	B2	1/2013	Ulrey et al.	
8,590,510	B2	11/2013	Surnilla et al.	
9,435,273	B2 *	9/2016	Sarder	
2002/0134362	A1	9/2002	Deutsch	
2004/0139943	A1	7/2004	Kern et al.	
2007/0137591	A1 *	6/2007	Sugimoto	F02B 43/00 123/41.7
2010/0258099	A1	10/2010	Andersson et al.	
2011/0168133	A1 *	7/2011	Pursifull	F02M 37/0064 123/495
2011/0253102	A1	10/2011	Watanabe	
2013/0047964	A1	2/2013	Kim	
2013/0220274	A1	8/2013	Deshpande et al.	
2014/0202430	A1 *	7/2014	Monros	F02D 19/0615 123/445
2014/0238340	A1	8/2014	Dunn et al.	
2014/0373531	A1	12/2014	Wong	
2015/0122230	A1	5/2015	Sarder et al.	

OTHER PUBLICATIONS

Honda EU20i LPG, Mar. 20, 2012, https://www.youtube.com/watch?v=yBpq33aJmR0.

Johnson et al., "Electronic Direct Fuel Injection (EDFI) for Small Two-Stroke Engines," SAE Technical Paper 1999-01-3312, Proceedings of the 1999 SAE Small Engine Technology Conference, Madison, WI, Sep. 28-30, 1999, pp. 1-15.

* cited by examiner

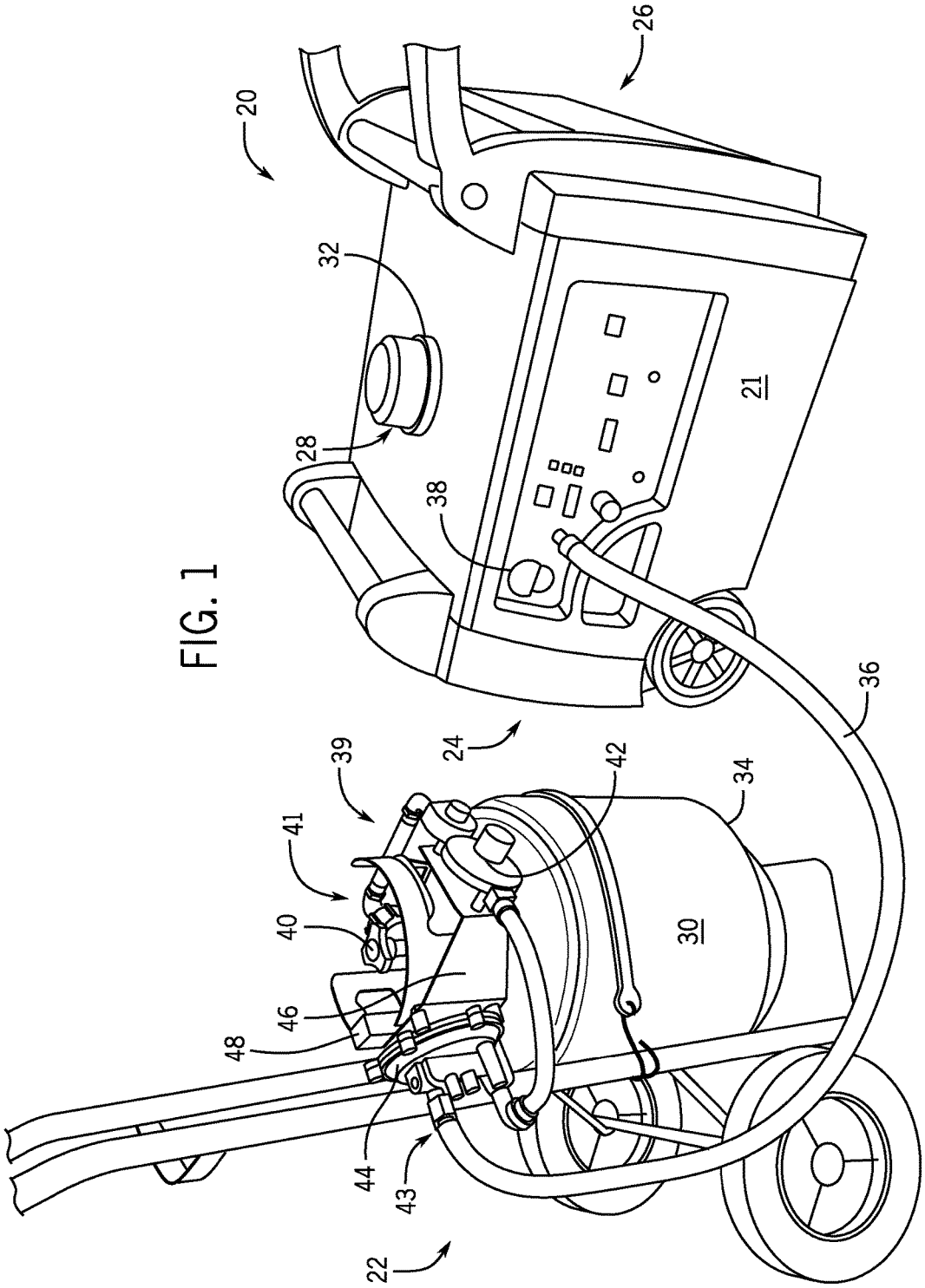

FIG. 1

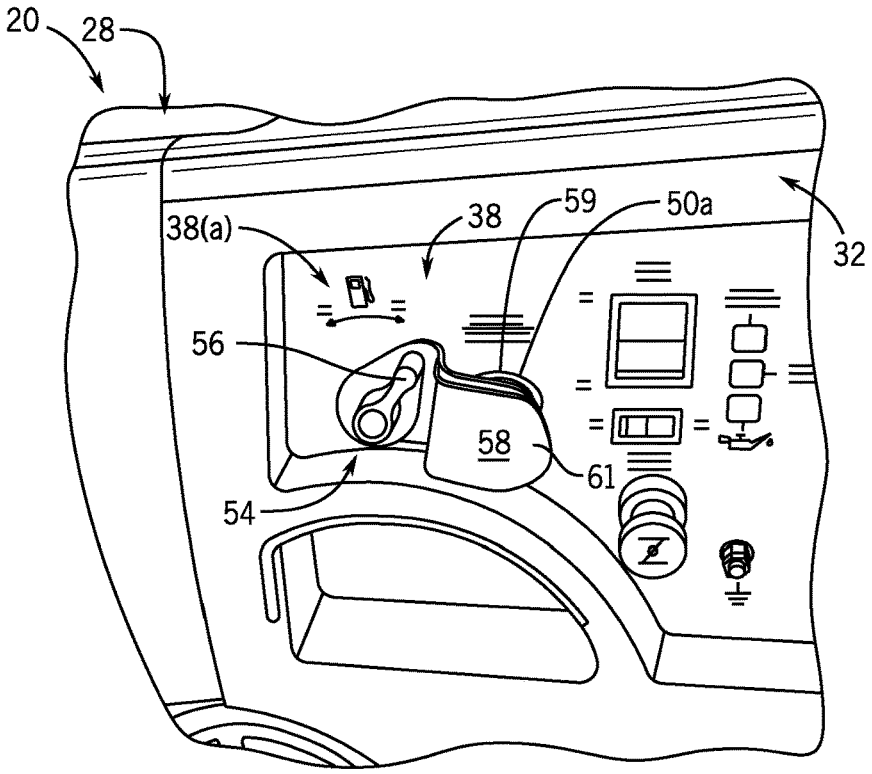
20
28
38(a)
38
59
50a
32
56
58
61
54

FIG. 2

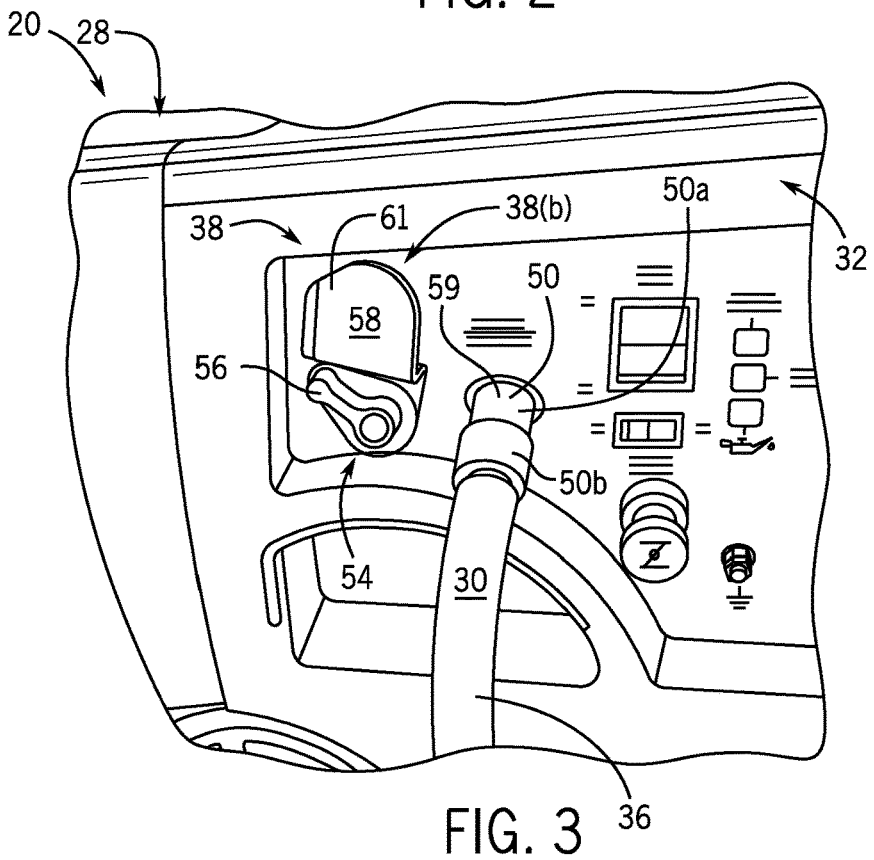
20
28
38
61
38(b)
50a
32
58
59
50
56
50b
54
30
36

FIG. 3

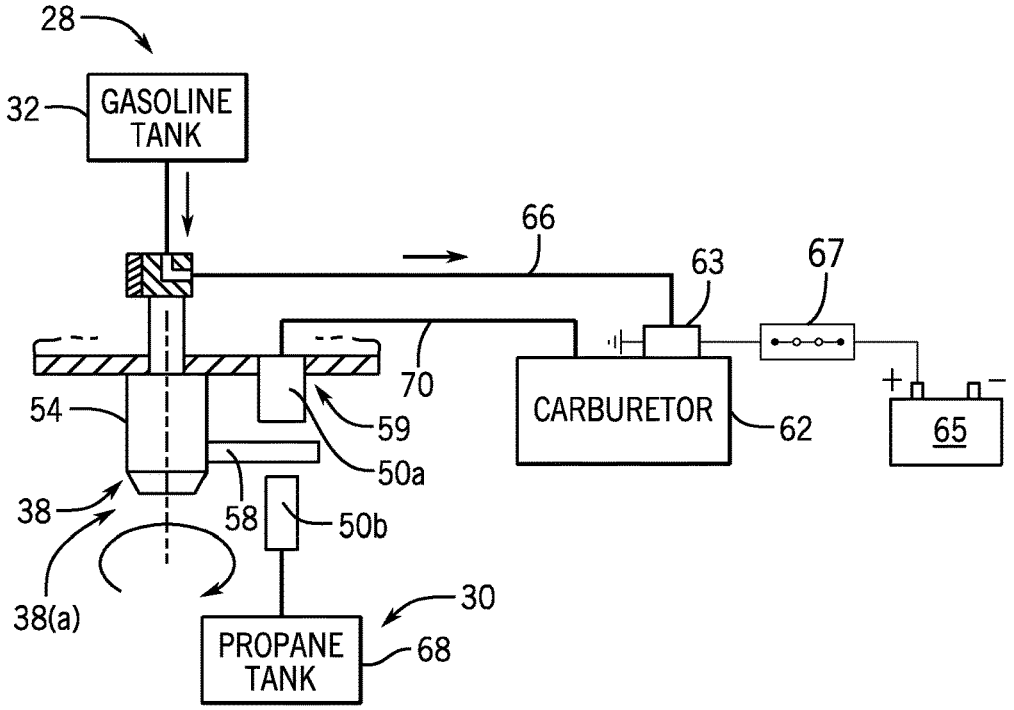
28
32
GASOLINE TANK
66
63
67
70
54
59
50a
CARBURETOR
62
65
38
58
50b
38(a)
30
PROPANE TANK
68

FIG. 4A

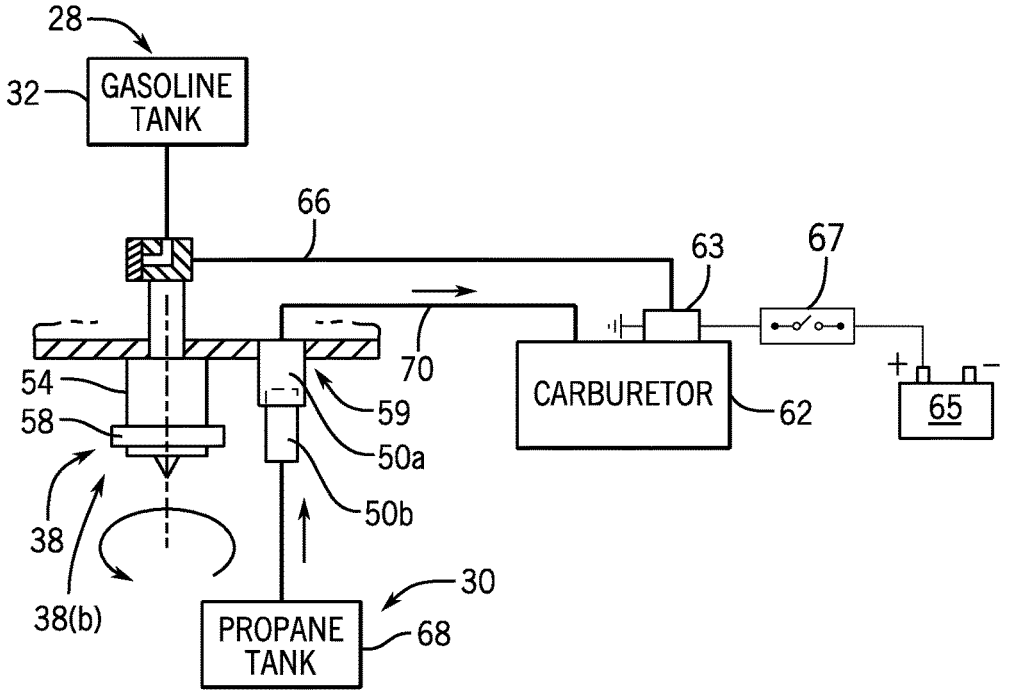
28
32
GASOLINE TANK
66
63
67
70
54
58
59
50a
CARBURETOR
62
65
38
50b
38(b)
30
PROPANE TANK
68

FIG. 4B

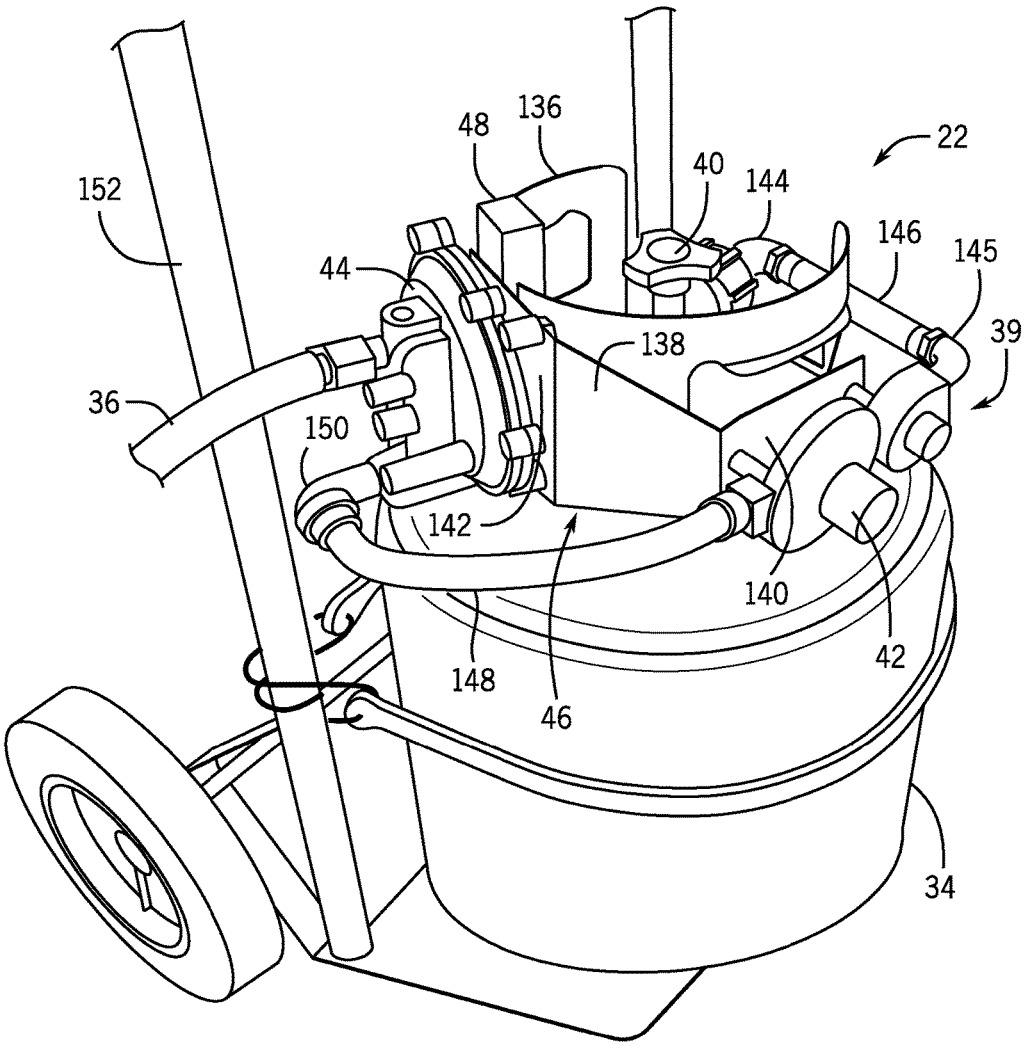

FIG. 5

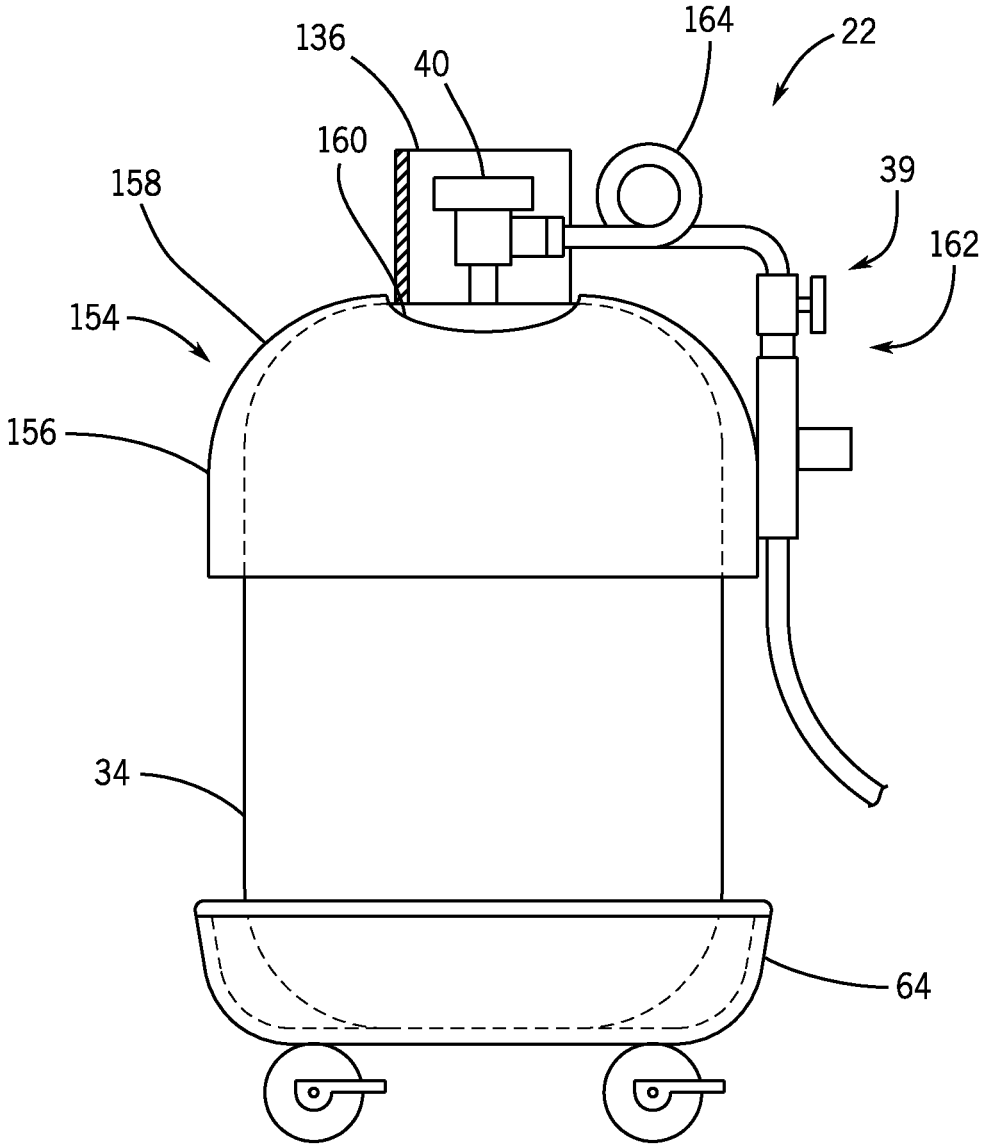

FIG. 6

DUAL FUEL LOCKOUT SWITCH FOR GENERATOR ENGINE

BACKGROUND OF THE INVENTION

Embodiments of the invention relate generally to dual fuel generators, and more particularly, to an apparatus and method for delivering liquid fuel and gaseous fuel to a dual fuel generator.

Electric generators are frequently driven by internal combustion engines that use gasoline as a fuel source. Gasoline is a common fuel source for generators in a variety of applications. However, alternative fuel sources also provide a desirable fuel source. For instance, alternative fuels may provide a clean burning fuel that limits hazardous emissions. Alternative fuels may also be stored for long periods of time without degradation, whereas gasoline can degrade over a period of months leading to hard starting, rough running, and also lead to gum and varnish deposit left in the fuel system. In addition, generators that operate on alternative fuels may generate electricity when gasoline is not readily available. For instance, generators are frequently used when power outages in the utility grid result from severe weather. Unfortunately, gas stations may also be closed as a result of the power outage. Such a circumstance presents just one example where it would be advantageous to operate electrical generators on alternative fuels.

Certain generators are configured to operate as "dual fuel" generators, otherwise known as bi-fuel generators. These generators are driven by an internal combustion engine that is configured to operate on a liquid fuel for a period of operation and an alternative fuel for another period of operation. The alternative fuel source may exist in a gaseous state at normal temperature and pressure and can be any one of liquefied petroleum gas, compressed natural gas, hydrogen, or the like. Liquefied petroleum gas (LPG), often referred to as propane, exists in a gaseous state at normal temperature and pressure but can be conveniently stored under pressure in a liquid state. LPG may be a desirable fuel source for internal combustion engines because it can be stored for longer periods of time and contains fewer impurities than gasoline, resulting in smoother and cleaner operation, and often resulting in a longer lasting engine.

In order to provide the liquid and gaseous fuel to the engine, the dual fuel engine may have a first fuel line for liquid fuel and a second fuel line for gaseous fuel. A liquid fuel source and a gaseous fuel source may be coupled to the respective lines to provide fuel to the engine. However, a common problem with such configurations that couple two fuel sources to a single engine is the engine can experience overly rich air-fuel ratio when both fuels are simultaneously engaged during cross-over switching between the fuel sources. Further, such simultaneous delivery of fuel from the first fuel line and the second fuel line may make the engine hard to start or lead to unstable operating conditions.

Therefore, it would be desirable to design a dual fuel generator having a liquid fuel and gaseous fuel delivery system that overcomes the aforementioned detriments without substantially increasing the overall cost of the system.

BRIEF DESCRIPTION OF THE INVENTION

In accordance with one aspect of the invention, a mechanical fuel lockout switch for a dual fuel engine provides for the selection of a desired fuel to operate the engine. The mechanical fuel lockout switch includes a mechanical fuel valve and a fuel lockout apparatus. The

mechanical fuel valve actuates between a first position and a second position to selectively control fuel flow to the dual fuel engine from a first fuel source through a first fuel line and a second fuel source through a second fuel line. The fuel lockout apparatus couples to the mechanical fuel valve ensuring individual communication of the fuel sources to the engine. The mechanical fuel lockout switch communicates the first fuel source to the dual fuel engine and prevents communication between the second fuel source and the dual fuel engine when the mechanical fuel valve is in the first position, and communicates the second fuel source to the dual fuel engine and interrupts the first fuel source communication with the dual fuel engine when in the second position.

In accordance with another aspect of the invention, a dual fuel generator and fuel delivery system includes a dual fuel generator configured to operate on a liquid fuel supplied from a liquid fuel source through a liquid fuel line and a gaseous fuel supplied from a pressurized fuel source through a gaseous fuel line. The dual fuel generator and fuel delivery system also includes a fuel regulator system located off board the dual fuel generator to control the pressure of fuel from the pressurized fuel source and deliver the fuel at a desired pressure for operation of the generator. The fuel regulator system includes a primary pressure regulator coupled to a service valve of the pressurized fuel source and configured to regulate the fuel supplied from the pressurized fuel source to a reduced pressure. The fuel regulator system also includes a secondary pressure regulator coupled to the primary pressure regulator and configured to regulate the gaseous fuel supplied from the primary pressure regulator to a desired pressure for delivery through the gaseous fuel line to operate the dual fuel generator. The dual fuel generator and fuel delivery system further includes a mechanical fuel valve actuateable between a first position and a second position to selectively control fuel flow to the dual fuel generator from the liquid fuel source through the liquid fuel line and the pressurized fuel source through the gaseous fuel line.

In accordance with yet another aspect of the invention, a method of assembling a mechanical fuel lockout switch for an internal combustion engine includes providing an internal combustion engine configured to operate on a fuel from a first fuel source and a different fuel from a second fuel source. The method also includes coupling a mechanical fuel valve to the internal combustion engine actuateable between a first position and a second position to selectively control fuel flow to the internal combustion engine from the first fuel source through a first fuel line and the second fuel source through a second fuel line. The method further includes coupling a fuel lockout apparatus to the mechanical fuel valve. When the mechanical fuel valve is in the first position, the fuel lockout apparatus communicates the first fuel source to the internal combustion engine and prevents the second fuel source from coupling to the internal combustion engine, and actuation of the mechanical fuel valve to the second position causes the fuel lockout apparatus to permit the second fuel source to couple to the internal combustion engine, and interrupts the first fuel source communication with the internal combustion engine.

Various other features and advantages will be made apparent from the following detailed description and the drawings.

BRIEF DESCRIPTION OF THE DRAWINGS

The drawings illustrate preferred embodiments presently contemplated for carrying out the invention.

In the drawings:

FIG. **1** is a perspective view of a dual fuel generator coupled to a fuel delivery system, according to an embodiment of the invention.

FIG. **2** is a detail view of a portion of the generator of FIG. **1** about a mechanical fuel lockout switch with the switch in a first position, according to an embodiment of the invention.

FIG. **3** is a detail view similar to FIG. **2** and showing the mechanical fuel lockout switch in a second position, with an LPG supply line connected thereto, according to an embodiment of the invention.

FIG. **4**A is a schematic diagram of a fuel system for the dual fuel generator of FIG. **1** showing a liquid fuel source in communication with a carburetor of the generator consistent with the first position of the switch as shown in FIG. **2**, according to an embodiment of the invention.

FIG. **4**B is a schematic diagram of the fuel system of FIG. **4**A showing a gaseous fuel source in communication with a carburetor of the generator of FIG. **1** consistent with the second position of the switch as shown in FIG. **3**, according to an embodiment of the invention.

FIG. **5** is a perspective view of a fuel delivery system for the dual fuel generator of FIG. **1**, according to an embodiment of the invention.

FIG. **6** is a side view of a fuel delivery system for the dual fuel generator of FIG. **1**, according to an embodiment of the invention.

DETAILED DESCRIPTION OF THE PREFERRED EMBODIMENT

The operating environment of the invention is described with respect to a dual fuel generator. However, it will be appreciated by those skilled in the art that the invention is equally applicable for use with any dual fuel internal combustion engine. Moreover, the invention will be described with respect to a dual fuel generator configured to operate on a liquid fuel and a gaseous fuel. However, one skilled in the art will further appreciate that the invention is equally applicable for use with other fuel combinations for dual fuel generators and internal combustion engines.

Referring to FIG. **1**, a dual fuel generator **20** is coupled to a fuel delivery system **22**, in accordance with an embodiment of the invention. Dual fuel generator **20** includes an internal combustion engine (not shown) within housing **21** at one end **24**, operatively connected to an alternator also enclosed in housing **21** at another end **26**, by conventional means. Dual fuel generator **20** is configured to operate on different fuels via either a first fuel source **28** or a second fuel source **30**. In an exemplary embodiment of the invention, first fuel source **28** is a liquid fuel and second fuel source **30** is a gaseous fuel. The liquid fuel may be gasoline and the gaseous fuel may be liquid petroleum gas (LPG). Each can selectively operate the generator as desired and controlled by an operator. For instance, generator **20** may operate on gasoline for a first period of operation and then switch to LPG for a second period of operation. However, it is contemplated that dual fuel generator **20** is configured to operate on fuels other than gasoline and LPG (e.g., natural gas, biodiesel, etc.), and thus the scope of the invention is not meant to be limited strictly to a dual fuel arrangement where first fuel source **28** provides gasoline and second fuel source **30** provides LPG.

In one embodiment of the invention, dual fuel generator **20** includes a gasoline tank **32** or, generally, a liquid fuel tank, located inside cover **21** onboard generator **20** to provide gasoline to the engine as first fuel source **28**. Gasoline tank **32** connects to a first fuel line to provide gasoline to the carburetor to run the engine, as will later be described with reference to FIGS. **4**A and **4**B. Generator **20** is also coupled to a pressurized fuel container **34**, or a pressurized fuel source, located off board generator **20** to provide LPG to the engine as second fuel source **30**. Pressurized fuel container **34** is coupled to generator **20** with an LPG supply hose **36**. LPG supply hose **36** is coupled to a second fuel line within generator **20** to provide LPG to the carburetor to run the engine. Dual fuel generator **20** includes a mechanical fuel lockout switch **38** for selecting a desired fuel to be provided to the engine. The mechanical fuel lockout switch **38** is actuated to select first fuel source **28** when in a first position, as shown in FIG. **2**, and alternately to select second fuel source **30** when in a second position, as shown in FIG. **3**.

Referring back to FIG. **1**, in an exemplary embodiment, fuel **30** from pressurized fuel container **34** is regulated using a fuel regulator system **39** for delivery to the engine. Fuel regulator system **39** includes one or more pressure regulators that reduce and control the pressure of the fuel from pressurized fuel container **34** and delivers fuel at a desired pressure for operation of the engine. Fuel regulator system **39** has an inlet **41** operatively coupled to a service valve **40** of pressurized fuel container **34** and an outlet **43** coupled to LPG supply hose **36**. Fuel regulator system **39** includes a primary pressure regulator **42** coupled to pressurized fuel container **34** and a secondary pressure regulator **44**. Primary pressure regulator **42** protects downstream components from high pressure of pressurized fuel container **34**. Primary pressure regulator **42** receives LPG through service valve **40** of pressurized fuel container **34** and reduces the pressure of the LPG to a first stage. In one embodiment of the invention, the first stage may be delivered directly to generator **20** at a pressure required for operation of the engine.

In an exemplary embodiment of the invention, fuel regulator system **39** includes secondary pressure regulator **44** coupled to the outlet of primary pressure regulator **42** in order to use standard "off-the-shelf" components. Typically, the primary pressure regulator is mounted on the LPG tank, while the secondary pressure regulator is mounted on the component using the fuel, such as an engine or grill. Here, since generator **20** can be used as a gasoline only generator, secondary pressure regulator **44** is mounted off-board the generator to reduce size and cost of the generator. Secondary pressure regulator **44** receives LPG from primary pressure regulator **42** and further reduces the pressure of LPG to a second stage to be delivered to generator **20**. In a system with two regulators, primary pressure regulator **42** regulates fuel received from pressurized fuel container **34** and reduces the pressure of the fuel to a level required for operation of secondary pressure regulator **44**. Secondary pressure regulator **44** regulates fuel received from primary pressure regulator **42** and further reduces the pressure of the fuel to a level required for operation of generator **20**. In addition, primary pressure regulator **42** may compensate for varying tank pressure as fuel is depleted while secondary pressure regulator **44** may compensate for varying demand from generator **20**.

In accordance with an exemplary embodiment of the invention, fuel regulator system **39** includes both the primary and secondary regulators, or a custom single regulator, but in any case is located remotely, or off-board, from dual fuel generator **20**. Fuel regulator system **39** may be directly mounted to pressurized fuel container **34** using a regulator mounting bracket **46**. Regulator mounting bracket **46** has

mounting locations for primary pressure regulator **42** and secondary pressure regulator **44**. Regulator mounting bracket **46** also has a securing mechanism **48** to secure regulator mounting bracket **46** to pressurized fuel container **34**.

In another embodiment of the invention, primary pressure regulator **42** is mounted on regulator mounting bracket **46** while secondary pressure regulator **44** could be mounted on or near generator **20**. In yet another embodiment of the invention, a dual stage regulator may regulate the fuel received from pressurized fuel container **34** and deliver fuel at a pressure required for operation of generator **20**. Such a dual stage regulator may regulate the fuel to the second stage within a single structure. The dual stage regulator may be mounted directly on fuel container **34**.

Referring to FIG. **2**, a detail view of a portion of generator **20** of FIG. **1** depicts mechanical fuel lockout switch **38** in a first position **38**(*a*), in accordance with an embodiment of the invention. In this position, mechanical fuel lockout switch **38** provides gasoline flow from gasoline tank **32** to the engine while preventing connection of an LPG supply line to fuel inlet **59** of the second fuel line, as will later be discussed in detail with reference to FIGS. **4**A and **4**B. Still referring to FIG. **2**, mechanical fuel lockout switch **38** provides a combination liquid fuel shutoff valve and a gaseous fuel supply lockout that prevents simultaneous delivery of fuel to the engine from gasoline tank **32** and pressurized fuel container **34**, FIG. **1**. As such, mechanical fuel lockout switch **38** provides a fuel selector to ensure only the selected fuel is provided to dual fuel generator **20**.

Mechanical fuel lockout switch **38**, FIG. **2**, includes mechanical fuel valve **54** actuateable between first position **38**(*a*) as shown in FIG. **2** and second position **38**(*b*) as shown in FIG. **3** to selectively control fuel flow to the dual fuel engine from first fuel source **28** through a first fuel line and second fuel source **30** through a second fuel line **36**. Mechanical fuel lockout switch **38** may also include fuel lockout apparatus **58** coupled to mechanical fuel valve **54** to communicate fuel sources individually to generator **20**. In one embodiment of the invention, fuel lockout apparatus **58** communicates first fuel source **28** to the engine by actuating mechanical fuel valve **54** to first position **38**(*a*) to open the first fuel line as shown in FIG. **2**, and communicates second fuel source **30** to the engine by actuating mechanical fuel valve **54** to second position **38**(*b*) to open communication of the second fuel source **30** to the engine as shown in FIG. **3**. Referring back to FIG. **2**, when mechanical fuel valve **54** is in first position **38**(*a*), fuel lockout apparatus **58** communicates first fuel source **28** to the dual fuel engine and prevents communication between the second fuel source and the dual fuel engine.

In an exemplary embodiment of the invention, mechanical fuel valve **54** controls the flow of LPG to the engine by actuating fuel lockout apparatus **58** to block or unblock fuel inlet **59** for the second fuel source. Mechanical fuel valve **54** is coupled to the first fuel line, as shown in FIGS. **4**A and **4**B, and therefore can control the flow of gasoline to the engine by opening and closing the first fuel line. When the mechanical fuel valve **54**, FIG. **2**, is in the first position **38**(*a*), gasoline flows from the gasoline tank to the engine and the fuel lockout apparatus **58** blocks the fuel inlet **59**. Accordingly, fuel lockout apparatus **58** prevents LPG flow to generator **20** when the mechanical fuel valve **54** is in first position **38**(*a*) wherein the engine is operated on gasoline.

Mechanical fuel valve **54** includes a fuel valve handle **56** to control the opening and closing of the valve. Fuel valve handle **56** is movable between first position **38**(*a*) as shown in FIG. **2** and second position **38**(*b*) as shown in FIG. **3**. Mechanical fuel valve **54** opens the first fuel line (to enable liquid fuel flow to the engine) when fuel valve handle **56** is in the first position, and mechanical fuel valve **54** closes the first fuel line (to prevent liquid fuel flow to the engine) when fuel valve handle **56** is in the second position. Thus, when fuel valve handle **56** is in first position **38**(*a*) as shown in FIG. **2**, mechanical fuel valve **54** opens the first fuel line and allows gasoline from gasoline tank **32** to flow to the engine.

Fuel valve handle **56** is coupled to fuel lockout apparatus **58**. Fuel valve handle **56** actuates with fuel lockout apparatus **58** to prevent LPG flow to generator **20** when gasoline flow to the generator is enabled. Fuel lockout apparatus **58** is controlled by fuel valve handle **56** so that moving fuel valve handle **56** to the first position causes fuel lockout apparatus **58** to block fuel inlet **59** for LPG, and moving fuel valve handle **56** to the second position causes fuel lockout apparatus **58** to unblock fuel inlet **59** for LPG.

In an exemplary embodiment of the invention, fuel valve handle **56** rotates between the first position and the second position and fuel lockout apparatus **58** is rigidly coupled to the rotating handle. Fuel lockout apparatus **58** may include a fuel inlet cover **61**, which may be a flange, coupled to fuel valve handle **56** so that fuel inlet cover **61** rotates with the handle. Fuel inlet cover **61** extends radially outward from fuel valve handle **56** and sweeps over fuel inlet **59** for LPG as fuel valve handle **56** rotates. That is, fuel inlet cover **61** rotates transversely across fuel inlet **59** and blocks access thereto. Accordingly, fuel inlet cover **61** prevents LPG flow to generator **20** when fuel valve handle **56** is in first position **38**(*a*) to allow gasoline to run the engine.

Referring to FIG. **3**, a detail view of a portion of generator **20** of FIG. **1** depicts mechanical fuel lockout switch **38** in a second position **38**(*b*), in accordance with an embodiment of the invention. In this position, the mechanical fuel lockout switch **38** provides a disconnect to stop gasoline flow from gasoline tank **32** to the engine while allowing connection of LPG supply hose **36** to fuel inlet **59** of the second fuel line. FIG. **3** further shows LPG supply hose **36** coupling second fuel source **30** to generator **20** to deliver LPG to run the generator.

Mechanical fuel lockout switch **38** includes mechanical fuel valve **54** coupled to fuel lockout apparatus **58** to prevent gasoline flow to generator **20** when LPG from the LPG service hose **36** is supplied to the engine. In one embodiment of the invention, actuation of mechanical fuel valve **54** to second position **38**(*b*) causes fuel lockout apparatus **58** to allow communication of second fuel source **30** to the dual fuel engine, and interrupts the first fuel source **28** communication with the dual fuel engine. The position of fuel lockout apparatus **58** prevents the fuel valve handle **56** from moving to first position **38**(*a*) (FIG. **2**) while LPG supply hose **36** is connected to generator **20**.

A quick-disconnect hose coupling **50**, also referred to as a quick-connect hose coupling, connects LPG supply hose **36** to generator **20** so that LPG supply hose **36** may be quickly attached and detached from generator **20**. Hose coupling **50** has a first end **50***a* mounted on the external surface of generator **20** and coupled to supply the second fuel to the engine. Hose coupling **50** has a second end **50***b* coupled to the outlet of LPG supply hose **36**. Hose coupling **50** has a valve that opens when the couplings are engaged and closes when the couplings are disengaged. As such, quick-disconnect hose coupling **50** automatically opens when connected to enable fuel flow from LPG supply hose **36** to the engine. Hose coupling **50** automatically disconnects fluid communication when disconnected. Accordingly,

when the supply hose is detached from generator **20**, the coupling **50** is automatically closed so that fuel does not escape and unwanted air does not enter the fuel system.

In one embodiment, fuel inlet cover **61** is coupled to fuel valve handle **56** so that it is spaced apart from the surface of generator **20** to provide clearance for first end **50***a* of the quick-disconnect hose coupling **50** that protrudes from the surface of generator **20**. As shown in FIG. **2**, fuel inlet cover **61** blocks off first end **50***a* of the quick-disconnect hose coupling when fuel valve handle **56** is rotated to first position **38**(*a*) to enable gasoline flow so that fuel inlet cover **61** prevents connection of LPG supply hose **36** (FIG. **3**) to generator **20**. As shown in FIG. **3**, fuel inlet cover **61** uncovers first end **50***a* of the quick-disconnect hose coupling **50** when fuel valve handle **56** is rotated to second position **38**(*b*) to disable gasoline flow so that fuel inlet cover **61** permits connection of LPG supply hose **36** to generator **20**.

To operate generator **20** on LPG, fuel valve handle **56** is turned to second position **38**(*b*) to disable the flow of gasoline to the engine and to expose first end **50***a* of hose coupling **50** on generator **20**. LPG supply hose **36** is then connected to generator **20** via hose coupling **50** to enable the flow of LPG to the engine. To operate generator **20** on gasoline, LPG supply hose **36** is disconnected from generator **20** via hose coupling **50** to disable the flow of LPG to the engine and to unblock fuel valve handle **56** from rotating to the first position. As shown in FIG. **2**, fuel valve handle **56** is then turned to first position **38**(*a*) to enable the flow of gasoline to generator **20**.

Referring to FIG. **4**A, a schematic diagram of a fuel system for a dual fuel engine shows mechanical fuel lockout switch **38** in first position **38**(*a*) to provide communication between the first fuel source **28** and dual fuel carburetor **62**, according to an embodiment of the invention. Mechanical fuel lockout switch **38** prevents communication between second fuel source **30** and dual fuel carburetor **62** when the switch is in first position **38**(*a*). In one embodiment of the invention, first fuel source **28** includes a gasoline tank **32** to provide gasoline to carburetor **62** through a first fuel line **66**, and second fuel source **30** includes a propane or LPG tank **68** to provide propane or LPG to carburetor **62** through a second fuel line **70**. Accordingly, first fuel line **66** may be a liquid fuel line and second fuel line **70** may be a gaseous fuel line.

Mechanical fuel lockout switch **38** includes a mechanical fuel valve **54** actuateable between first position **38**(*a*) as shown in FIG. **4**A and second position **38**(*b*) as shown in FIG. **4**B to selectively control fuel flow to the dual fuel engine from first fuel source **28** through first fuel line **66** and second fuel source **30** through second fuel line **70**. Referring back to FIG. **4**A, mechanical fuel valve **54** selectively controls fuel flow through first fuel line **66** by opening the line when the mechanical fuel lockout switch **38** actuates to first position **38**(*a*). Mechanical fuel valve **54** may be coupled to fuel lockout apparatus **58** that actuates with mechanical fuel valve **54** to block and unblock fuel inlet **59** of second fuel line **70**. First end **50***a* of the quick-disconnect hose coupling is located at fuel inlet **59** and a mating end **50***b* of the quick-disconnect hose coupling is coupled to the propane or LPG tank **68**. Actuation of mechanical fuel valve **54** to first position **38**(*a*) causes fuel lockout apparatus **58** to block fuel inlet **59** to prevent coupling the first end **50***a* and second end **50***b* of the quick-disconnect hose coupling together, and actuation of mechanical fuel valve **54** to another position causes fuel lockout apparatus **58** to unblock fuel inlet **59** to permit attaching first end **50***a* and second end **50***b* together.

In one embodiment of the invention, a fuel cut solenoid **63** couples to carburetor **62** to regulate liquid fuel flow into a main nozzle within the carburetor. Fuel cut solenoid **63** is advantageous to control liquid fuel flow downstream of a float bowl in the carburetor and can stop fuel flow to the engine immediately after ignition shutdown. As such, fuel cut solenoid **63** prevents the engine from drawing in fuel from the float bowl while the engine shuts off. Fuel cut solenoid **63** also traps fuel in the float bowl to eliminate delay in filling the bowl when starting the engine on liquid fuel, and prevents liquid fuel flow from the float bowl to the engine when starting on gaseous fuel.

Fuel cut solenoid **63** may regulate fuel flow through multiple fuel lines in carburetor **62** that provide fuel from the float bowl to the engine. For instance, carburetor **62** may have a main fuel line and an idle fuel line that receive fuel from the float bowl. Fuel cut solenoid **63** may control fuel flow through all of the fuel lines that receive fuel from the float bowl or may regulate only some of the fuel lines. As such, fuel cut solenoid **63** may block fuel flow through the main fuel line while small amounts of fuel can flow through the idle fuel line.

Fuel cut solenoid **63** preferably operates as a normally closed valve that opens when powered by a 12 volt battery **65**, although fuel cut solenoid **63** may also be operated as a normally open valve. The normally closed valve is opened for gasoline mode to allow gasoline flow to the engine and closed for LPG mode to prevent gasoline flow to the engine. Fuel cut solenoid **63** is operated by an electrical switch **67** which may be mechanically actuated and controlled by mechanical fuel lockout switch **38**. As such, actuation of mechanical fuel lockout switch **38** to first position **38**(*a*) closes electrical switch **67** to power and open fuel cut solenoid **63** as represented in FIG. **4**A, and actuation of mechanical fuel lockout switch **38** to second position **38**(*b*) opens electrical switch **67** to interrupt power and close fuel cut solenoid **63** as represented in FIG. **4**B.

Referring to FIG. **4**B, a schematic diagram of a fuel system for a dual fuel engine shows mechanical fuel lockout switch **38** in second position **38**(*b*) to provide communication between second fuel source **30** and dual fuel carburetor **62**, according to an embodiment of the invention. Mechanical fuel lockout switch **38** prevents communication between first fuel source **28** and dual fuel carburetor **62** when the switch is in second position **38**(*b*). The dual fuel engine has a first fuel line **66** to provide fuel from first fuel source **28** to carburetor **62** and a second fuel line **70** to provide fuel from second fuel source **30** to carburetor **62**.

Mechanical fuel lockout switch **38** includes mechanical fuel valve **54** that selectively controls fuel flow through first fuel line **66** by closing the line when mechanical fuel lockout switch **38** actuates to second position **38**(*b*). Mechanical fuel lockout switch **38** may also include a mechanical lockout apparatus **58** to block and unblock fuel inlet **59** of the second fuel line **70**. Fuel inlet **59** may include first end **50***a* of the quick-connect hose coupling mounted on the generator and coupled to second fuel line **70**. Second end **50***b* of the quick-connect hose coupling is coupled to the outlet of second fuel source **30**, and the first end **50***a* mates with second end **50***b* to quickly attach propane or LPG tank **68** to second fuel line **70**. Fuel lockout apparatus **58** may also hold mechanical fuel lockout switch **38** in second position **38**(*b*) when the propane or LPG tank **68** is coupled to the engine via the ends **50***a*, **50***b* of the quick-connect hose coupling.

Fuel cut solenoid **63** couples to carburetor **62** to regulate liquid fuel flow through the carburetor as described with respect to FIG. **4**A. FIG. **4**B shows electrical switch **67**

opened to interrupt power and close fuel cut solenoid **63** for LPG mode when mechanical fuel lockout switch **38** is in second position **38**(*b*).

FIGS. **4**A and **4**B depict an embodiment where mechanical fuel valve **54** operates along first fuel line **66** to provide a flow path for first fuel source **28** to carburetor **62** when the valve is in first position **38**(*a*). That is, mechanical fuel valve **54** may control a single fuel line that runs through the valve while operating fuel lockout apparatus **58** to control fuel flow through second fuel line **70**. Embodiments of the invention also contemplate mechanical fuel valve **54** configured to operate along second fuel line **70** to provide a flow path for second fuel source **30** to carburetor **62** when the valve is in second position **38**(*b*). Mechanical fuel valve **54** may be configured to control multiple fuel lines that run through the valve according to embodiments of the invention.

Referring now to FIG. **5**, a perspective view of fuel delivery system **22** for dual fuel generator **20** of FIG. **1** is shown, in accordance with an embodiment of the invention. Fuel delivery system **22** includes a mounting arrangement for fuel regulator system **39**. The mounting arrangement includes regulator mounting bracket **46** for mounting fuel regulator system **39**. Regulator mounting bracket **46** extends around the outer periphery of collar **136** on pressurized fuel container **34**. Regulator mounting bracket **46** has securing mechanism **48** to secure to collar **136**. In one embodiment, securing mechanism **48** is a rigid component that extends inward from regulator mounting bracket **46** with a slot for receiving collar **136** to hold regulator mounting bracket **46** to collar **136**.

Regulator mounting bracket **46** provides mounting locations for pressure regulators. In one embodiment, regulator mounting bracket **46** is made of sheet metal bent in two locations to provide a central panel **138**, a first outer panel **140**, and a second outer panel **142** for mounting the regulators. The panels may be angled from each other such that regulator mounting bracket **46** fits around collar **136**. Primary pressure regulator **42** mounts on first outer panel **140** and secondary pressure regulator **44** mounts on second outer panel **142**. The panels are sized according to their respective regulators. Accordingly, second outer panel **142** is larger than first outer panel **140** if secondary pressure regulator **44** is larger than primary pressure regulator **42**. Panels **140**, **142** have fasteners or openings to receive fasteners to couple respective regulators **42**, **44** to the panels. Regulator mounting bracket **46** rests on top of pressurized fuel container **34** and engages the periphery of collar **136** to support fuel regulator system **39** on the container.

In one embodiment of the invention, primary pressure regulator **42** couples to two ninety degree elbows **144**, **145** to reach around collar **136** in order to couple to service valve **40**. The two elbows **144**, **145** are joined by a hose or pipe **146** that leads from elbow **144** at service valve **40** to elbow **145** at the outer periphery of collar **136**. The outlet of primary pressure regulator **42** couples to a hose **148** that extends to another ninety degree elbow **150** coupled to the inlet of secondary pressure regulator **44**. Secondary pressure regulator **44** couples to LPG supply hose **36**. Pressurized fuel container **34** may be strapped to a dolly **152**.

Referring now to FIG. **6**, a side view of another fuel delivery system **22** for dual fuel generator **20** of FIG. **1** is shown, in accordance with an embodiment of the invention. Fuel delivery system **22** includes a mounting arrangement for fuel regulator system **39**. The mounting arrangement includes a regulator mounting structure **154** for mounting fuel regulator system **39** to pressurized fuel container **34**. Regulator mounting structure **154** includes a cylinder **156** that surrounds the circumference of pressurized fuel container **34** to secure regulator mounting structure **154** radially along the circumference of pressurized fuel container **34**. Cylinder **156** couples to a dome **158** to support cylinder **156** relative to the top of pressurized fuel container **34**. Dome **158** has a central opening **160** through which collar **136** of pressurized fuel container **34** extends. Collar **136** of pressurized fuel container **34** extends through dome **158** so that service valve **40** is easily accessible from above regulator mounting structure **154** and so that dome **158** sits on pressurized fuel container **34** around collar **136**.

Regulator mounting structure **154** supports pressure regulators around the outer circumference of cylinder **156**. In some embodiments of the invention, a dual stage pressure regulator **162** functions as both a primary pressure regulator and a secondary pressure regulator in a single integral component, and dual stage pressure regulator **162** may be mounted on regulator mounting structure **154**. In other embodiments in of the invention, primary pressure regulator **42** (FIG. **5**) is mounted to service valve **40** while secondary pressure regulator **44** (FIG. **5**) is mounted on regulator mounting structure **154**. Alternatively, both primary pressure regulator **42** (FIG. **5**) and secondary pressure regulator **44** (FIG. **5**) may be mounted on regulator mounting structure **154**.

Fuel regulator system **39** may be coupled to service valve **40** by a flexible connector called a pigtail **164**. Pigtail **164** absorbs shock in the system from pressure surges and from movement of downstream components. Pigtail **164** can be looped to conserve space and therefore pressurized fuel container **34** is referred to as an LPG pig. Accordingly, regulator mounting structure **154** is referred to as a pig hat because it fits on the LPG pig. Pressurized fuel container **34** may be secured to a platform or mobile cart **64** for stability or transportation. In another embodiment, a regulator mounting device, including regulator mounting structure **154** or regulator mounting bracket **46** (FIG. **5**), is secured directly to a platform or a mobile cart.

Beneficially, embodiments of the invention provide for a mechanical fuel lockout switch to ensure that two fuels are not simultaneously delivered to a dual fuel internal combustion engine. Embodiments of the invention also provide for a dual fuel generator with a remotely mounted gaseous fuel regulator system.

Therefore, according to one embodiment of the invention, a mechanical fuel lockout switch for a dual fuel engine includes a mechanical fuel valve actuateable between a first position and a second position to selectively control fuel flow to the dual fuel engine from a first fuel source through a first fuel line and a second fuel source through a second fuel line. The mechanical fuel lockout switch also includes a fuel lockout apparatus coupled to the mechanical fuel valve. The mechanical fuel lockout switch communicates the first fuel source to the dual fuel engine and prevents communication between the second fuel source and the dual fuel engine when the mechanical fuel valve is in the first position, and communicates the second fuel source to the dual fuel engine and interrupts the first fuel source communication with the dual fuel engine when in the second position.

According to another embodiment of the invention, a dual fuel generator and fuel delivery system includes a dual fuel generator configured to operate on a liquid fuel supplied from a liquid fuel source through a liquid fuel line and a gaseous fuel supplied from a pressurized fuel source through a gaseous fuel line. The dual fuel generator and fuel delivery

system also includes a fuel regulator system located off board the dual fuel generator. The fuel regulator system includes a primary pressure regulator coupled to a service valve of the pressurized fuel source and configured to regulate the fuel supplied from the pressurized fuel source to a reduced pressure. The fuel regulator system also includes a secondary pressure regulator coupled to the primary pressure regulator and configured to regulate the gaseous fuel supplied from the primary pressure regulator to a desired pressure for delivery through the gaseous fuel line to operate the dual fuel generator. The dual fuel generator and fuel delivery system further includes a mechanical fuel valve actuateable between a first position and a second position to selectively control fuel flow to the dual fuel generator from the liquid fuel source through the liquid fuel line and the pressurized fuel source through the gaseous fuel line.

According to yet another embodiment of the invention, a method of assembling a mechanical fuel lockout switch for an internal combustion engine includes providing an internal combustion engine configured to operate on a fuel from a first fuel source and a different fuel from a second fuel source. The method also includes coupling a mechanical fuel valve to the internal combustion engine actuateable between a first position and a second position to selectively control fuel flow to the internal combustion engine from the first fuel source through a first fuel line and the second fuel source through a second fuel line. The method further includes coupling a fuel lockout apparatus to the mechanical fuel valve. When the mechanical fuel valve is in the first position, the fuel lockout apparatus communicates the first fuel source to the internal combustion engine and prevents the second fuel source from coupling to the internal combustion engine, and actuation of the mechanical fuel valve to the second position causes the fuel lockout apparatus to permit the second fuel source to couple to the internal combustion engine, and interrupts the first fuel source communication with the internal combustion engine.

This written description uses examples to disclose the invention, including the best mode, and also to enable any person skilled in the art to practice the invention, including making and using any devices or systems and performing any incorporated methods. The patentable scope of the invention is defined by the claims, and may include other examples that occur to those skilled in the art. Such other examples are intended to be within the scope of the claims if they have structural elements that do not differ from the literal language of the claims, or if they include equivalent structural elements with insubstantial differences from the literal languages of the claims.

What is claimed is:

1. A mechanical fuel lockout switch for a dual fuel engine comprising:

a mechanical fuel valve actuateable between a first position and a second position to selectively control fuel flow to the dual fuel engine from a first fuel source through a first fuel line and a second fuel source through a second fuel line; and

a fuel lockout apparatus coupled to the mechanical fuel valve;

wherein the mechanical fuel lockout switch:

communicates the first fuel source to the dual fuel engine and prevents communication between the second fuel source and the dual fuel engine when the mechanical fuel valve is in the first position, and

communicates the second fuel source to the dual fuel engine and interrupts the first fuel source communication with the dual fuel engine when in the second position; and

wherein the fuel lockout apparatus is configured to:

prevent the second fuel source from coupling to the second fuel line while the mechanical fuel valve is in the first position; and

permit the second fuel source to couple to the second fuel line while the mechanical fuel valve is in the second position.

2. The mechanical fuel lockout switch for a dual fuel engine of claim **1**, wherein the fuel lockout apparatus prevents actuation of the mechanical fuel valve to the first position when the second fuel source communicates with the dual fuel engine.

3. The mechanical fuel lockout switch for a dual fuel engine of claim **1**, wherein the fuel lockout apparatus comprises a flange rigidly coupled to the mechanical fuel valve that covers an inlet of the second fuel line while the mechanical fuel valve is in the first position and uncovers the inlet of the second fuel line while the mechanical fuel valve is in the second position.

4. The mechanical fuel lockout switch for a dual fuel engine of claim **3**, wherein the mechanical fuel valve rotates between the first position and the second position and the flange rotates transversely across the inlet of the second fuel line.

5. The mechanical fuel lockout switch for a dual fuel engine of claim **3**, further comprising;

a first end of a quick-disconnect hose coupling attached to the inlet of the second fuel line; and

a second end of the quick-disconnect hose coupling attached to the second fuel source to mate with the first end of the quick-disconnect hose coupling to couple the second fuel source to the second fuel line.

6. The mechanical fuel lockout switch for a dual fuel engine of claim **1**, wherein the mechanical fuel valve and the fuel lockout apparatus operate together to ensure that fuel from the first fuel source and fuel from the second fuel source are not simultaneously delivered to the dual fuel engine.

7. The mechanical fuel lockout switch for a dual fuel engine of claim **6**, wherein the first fuel source provides liquid fuel from a liquid fuel tank to the dual fuel engine and the second fuel source provides gaseous fuel from a pressurized fuel container to the dual fuel engine.

8. A method of assembling a mechanical fuel lockout switch for an internal combustion engine comprising:

providing an internal combustion engine configured to operate on a fuel from a first fuel source and a different fuel from a second fuel source;

coupling a mechanical fuel valve to the internal combustion engine actuateable between a first position and a second position to selectively control fuel flow to the internal combustion engine from the first fuel source through a first fuel line and the second fuel source through a second fuel line; and

coupling a fuel lockout apparatus to the mechanical fuel valve;

wherein when the mechanical fuel valve is in the first position, the fuel lockout apparatus communicates the first fuel source to the internal combustion engine and prevents the second fuel source from coupling to the internal combustion engine, and actuation of the mechanical fuel valve to the second position causes the fuel lockout apparatus to permit the second fuel source

to couple to the internal combustion engine, and interrupts the first fuel source communication with the internal combustion engine; and

wherein the fuel lockout apparatus prevents actuation of the mechanical fuel valve to the first position when the second fuel source is coupled to the internal combustion engine.

9. The method of claim **8**, wherein the fuel lockout apparatus is further configured to:

prevent coupling of the second fuel source to the second fuel line while the mechanical fuel valve is in the first position; and

permit coupling of the second fuel source to the second fuel line while the mechanical fuel valve is in the second position.

10. The method of claim **8**, wherein the fuel lockout apparatus comprises a fuel inlet cover configured to actuate in unison with the mechanical fuel valve to cover a fuel inlet on the internal combustion engine for the second fuel source when the mechanical fuel valve is in the first position and uncover the fuel inlet when the mechanical fuel valve is in the second position.

11. The method of claim **8**, further comprising coupling a fuel regulator system to the second fuel source to reduce fuel pressure therefrom and deliver fuel to the second fuel line at a pressure required for operation of the internal combustion engine.

12. The method of claim **11**, further comprising mounting the fuel regulator system to the second fuel source located off-board the internal combustion engine.

13. The method of claim **11**, further comprising:

coupling one end of a quick-disconnect hose coupling to an inlet on the internal combustion engine for the second fuel source; and

coupling a mating end of the quick-disconnect hose coupling to an outlet of the fuel regulator system.

14. The method of claim **8**, further comprising providing gasoline in a liquid fuel tank as the first fuel source and LPG in a pressurized fuel container as the second fuel source.

15. A mechanical fuel lockout switch for a dual fuel engine comprising:

a mechanical fuel valve actuateable between a first position and a second position to selectively control fuel flow to the dual fuel engine from a first fuel source through a first fuel line and a second fuel source through a second fuel line; and

a fuel lockout apparatus coupled to the mechanical fuel valve;

wherein the mechanical fuel lockout switch:

communicates the first fuel source to the dual fuel engine and prevents communication between the second fuel source and the dual fuel engine when the mechanical fuel valve is in the first position, and

communicates the second fuel source to the dual fuel engine and interrupts the first fuel source communication with the dual fuel engine when in the second position; and

wherein the fuel lockout apparatus prevents actuation of the mechanical fuel valve to the first position when the second fuel source communicates with the dual fuel engine.

* * * * *