Oct. 24, 1933. G. L. HOLZAPFEL 1,931,698

FUEL SYSTEM FOR INTERNAL COMBUSTION ENGINES

Filed March 30, 1931

Fig. 1

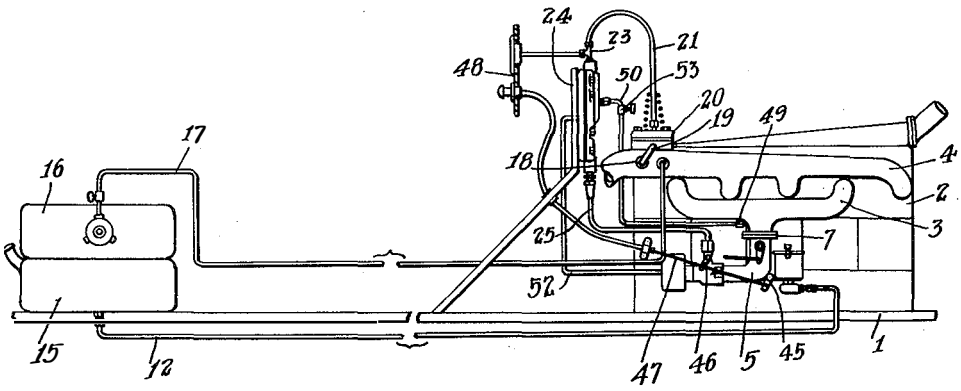

Fig. 2

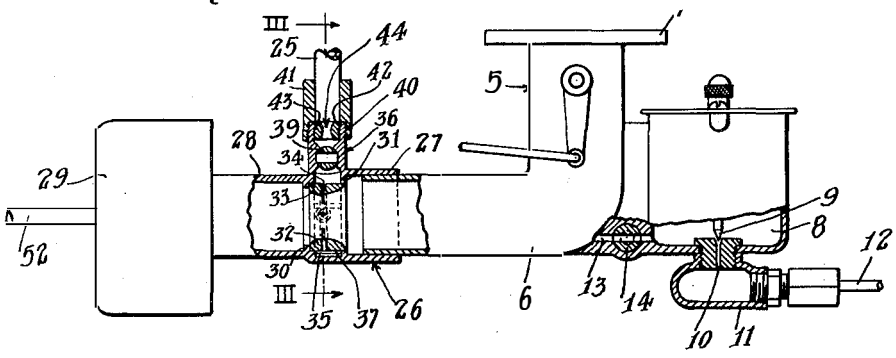

Fig. 3

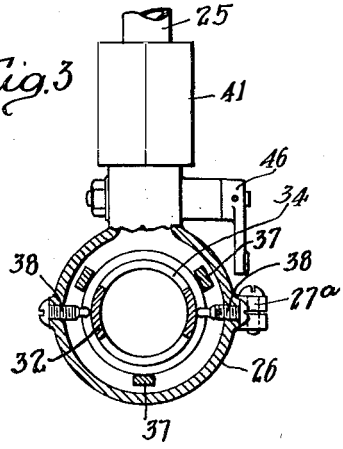

Inventor

George L. Holzapfel

By Lyon & Lyon

Attorneys

Patented Oct. 24, 1933 1,931,698

UNITED STATES PATENT OFFICE

1,931,698

FUEL SYSTEM FOR INTERNAL COMBUSTION ENGINES

George L. Holzapfel, Palos Verdes Estates, Calif., assignor to Richfield Oil Company of California, Los Angeles, Calif., a corporation of Delaware

Application March 30, 1931. Serial No. 526,175

4 Claims. (Cl. 261—16)

My invention relates to fuel systems for internal combustion engines, and has particular reference to a fuel system embodying the supplying of liquid fuel and gaseous fuel to an engine in alternation at will.

In the copending joint application of David E. Day and myself, Serial No. 494,328, filed November 8, 1930, a system of employing gaseous fuel for an internal combustion engine was disclosed in which a relatively cheap low grade gaseous fuel stored under pressure was passed through a pressure reducing valve to be introduced into a carbureter connected with an internal combustion engine so that gaseous fuel could be supplied to the engine at the desired pressure and mixed with air in the carbureter in the desired quantities to produce a proper combustible mixture for forming a fuel for the engine.

However, it frequently occurs that it is undesirable to rely upon the gaseous fuel as the sole source of supply for an internal combustion engine, particularly when such engine is employed for the purpose of driving a motor vehicle. It is, therefore, an object of this invention to provide a fuel system in which a gaseous fuel supply shall be auxiliary to the liquid fuel supply now commonly employed in connection with automobiles and similar vehicles.

Another object of the invention is to provide a fuel system in which the normal liquid fuel supply and carbureter therefor is combined with a gaseous fuel supply and a mixer therefor, the two fuel supplies being used in alternation to each other.

Another object of the invention is to provide a fuel system as set forth in the preceding paragraph in which the liquid fuel supply may be cut off and the gaseous fuel supply turned on, or vice versa so that when the liquid fuel is employed the gaseous fuel is disconnected and while the gaseous fuel is employed the liquid fuel is disconnected.

Another object of the invention is to provide a fuel system for supplying the gaseous fuel to an internal combustion engine in alternation with the normal liquid fuel supply and in which the gaseous fuel system may be readily connected to the existing liquid fuel carbureters now used on automobiles and similar vehicles.

Other objects and advantages will be apparent from a study of the following specification, read in connection with the accompanying drawing, wherein

Figure 1 is a diagrammatic view indicating the various elements of both the liquid and gaseous fuel supplies in proper relation to an automobile engine;

Figure 2 is a detailed view of a carbureter such as generally employed for supplying liquid fuel to an engine, this view being partly in section to illustrate the attachment of my gaseous fuel mixing device thereto; and

Figure 3 is a detailed, sectional view taken along line III—III of Fig. 2, illustrating the interior mechanism of the gaseous fuel mixer employed in practicing my invention.

Referring to the drawing, I have illustrated a portion of an automobile chassis 1, constituting the mounting for an internal combustion engine 2, such as is commonly employed in automobiles and the like. The engine 2 is illustrated as being provided with an intake manifold 3 communicating with the intake ports of the various cylinders comprising the engine 2. An exhaust manifold 4 is illustrated as being connected to the inside ports of the cylinders constituting the engine.

Connected to the intake manifold 3 is a carbureter 5 of any suitable construction, such as those constructions now employed for the mixing of liquid fuel with air prior to injection of such mixture into the intake manifold of the engine.

The carbureter 5 is illustrated as comprising a bent tube 6, one end 7 of which is connected to the intake manifold 3 and the other end of which constitutes an inlet opening through which air may be sucked for mixing with the fuel injected into the carbureter. The carbureter is equipped with a float chamber or fuel reservoir 8 which may be of any suitable construction to provide a supply of fuel at atmospheric pressure ready for injection into the tube 6 of the carbureter 5, the float chamber being provided with a float operated needle valve 9 which obstructs the entrance of fuel into the chamber 8 by closing off the passage 10 communicating with an inlet connection 11 to which the fuel supply line 12 may be connected.

The float chamber 8 is illustrated as communicating with the bent tube portion of the carbureter as by means of a passage 13 communicating with both the float chamber 8 and the tube 6. A rotary valve 14 is preferably interposed in the passage 13 for the purpose of permitting this passage to be cut off, as will hereinafter be described.

A main liquid supply tank is illustrated at 15 having attached to the lower end thereof the fuel supply line 12 through which fuel from the tank

15 may be passed to the float chamber 8 of the carburetor.

The foregoing description of the liquid fuel system is in all essential respects identical with the fuel supply systems now in common use in connection with automobiles, and similar vehicles.

I propose to add an additional fuel supply system employing a normally gaseous fuel, this system comprising a fuel supply tank 16 in which normally gaseous fuel is compressed and thereby maintained in liquefied condition. From tank 16 there extends a suitable gaseous fuel supply tube 17 extending to the bottom of the tank 16, so as to draw off the liquid and not gas. The gaseous fuel supply tube 17 is preferably threaded through the exhaust manifold 4 of the engine 2, as is indicated at 18, so that the fuel passing therethrough will be heated by contact of the tube 17 with the hot exhaust gases coming from the engine. The tube 17 continues from the exhaust manifold 4 as by way of the short section of tubing 19 into a combined filter and heat exchanger 20 which further assists in heating the gaseous fuel. From the filter 20 the fuel inlet tube continues, as is indicated at 21, to the inlet connection 23 to a pressure reducing valve 24.

The pressure reducing valve 24 is illustrated and described in detail in my copending application Serial No. 491,468, filed October 27, 1930 which has since matured into Patent 1,912,479 dated June 6, 1933 and comprises a valve constructed to receive a gas under relatively high pressure and to permit gases to flow therefrom at a pressure equal to that of the air supply. In order to equalize these pressures, a pipe 52 connects the air cleaner 29 with the atmosphere side of the pressure equalizing valve 24.

The gaseous fuel supply through outlet tube 25 may be mixed with air and passed into the tube 6 of the carbureter 5 so that such air and gas mixture may pass into the intake manifold 3 of the engine 2 and thus constitute the combustible fuel for operating the engine 2.

The mixing device is illustrated as comprising an attachment which may be connected to the inlet end of the carbureter tube 6, this mixing device comprising a tubular member 26, one end 27 of which is provided with an internal diameter of such size as to telescopically engage the air inlet end of the carbureter tube 6 and may be clamped thereon as by means of clamping screw 27*a*. The opposite end 28 of the mixer 26 is illustrated as being of slightly reduced diameter so that its outside diameter corresponds substantially with the outside diameter of the inlet end of the tubular carbureter 6. By reason of this reduced diameter the air cleaner 29, which normally is telescopically engaged upon the inlet end of the carbureter 6, may be inserted in place upon the end 28 of my mixer.

Within the tubular mixer 26 is a pair of radial flanges 30 and 31 which extend inwardly to form a seat for a venturi 32. The flange 30 is preferably formed with a shoulder 33 thereon to act as a limit stop for the venturi 32 when the same is inserted into engagement with the flanges 30 and 31.

The venturi 32 comprises an annular ring which has one or more slots 34 extending radially therethrough. Between the flanges 30 and 31 is an annular space 35 surrounding the venturi 32. This annular space 35 communicates with a gas inlet stem 36 through which gaseous fuel may be passed into the annular space 35 and thence through the slots 34 to the interior of the venturi 32. The annular space 35 between the flanges 30 and 31 may be bridged at a plurality of points by means of cross members 37 to assist in guiding the venturi 32 into its proper seating relation relative to the flanges when the same is to be inserted within the tubular mixer 26. The venturi 32 may be held in place when inserted as by means of one or more set screws 38 threaded radially into the mixer 26.

The gas inlet stem 36 is preferably provided with a cut off valve 39 which may be operated to either open the inlet passage 36 to the passage of gas therethrough, or to close the same so that gas cannot pass therethrough.

The upper end of the stem 36 is provided with external threads 40 for engagement with a suitable union nut 41 to secure the gas inlet pipe 25 thereto while the stem 36 may be additionally provided with internal threads 42 to permit a metering jet 43 to be threaded thereinto to provide the desired size orifice 44 for metering or limiting the quantity of gas permitted to flow into the mixer 26.

Referring, particularly, to Figure 1, it will be observed that the operating levers 45 and 46 for the valves 14 and 39, respectively, are connected to a rod or wire 47 which extends to a point of convenient access to the operator of the vehicle such as, for example, the dashboard 48 so that the rod or wire 47 may be manipulated to simultaneously control both valves 14 and 39.

The operation of my device is as follows: When the engine 2 is to be started the valves 14 and 39 may be operated by the rod or wire 47 to the position opposite to that illustrated in Fig. 2. That is, the valve 14 is closed and the valve 39 is open so that under these conditions gaseous fuel will be supplied to the carburetor 5 and thus the engine may be started upon the gaseous fuel. For small loads, or low speeds, the engine may be operated continuously upon such gaseous fuel though as soon as the engine is started it may be switched over to the liquid fuel by manipulating the rod or wire 47. Operating the rod or wire 47 will reverse the valves 14 and 39 so that the gaseous fuel supply is cut off and the liquid fuel supply connected to feed the carburetor.

Either the liquid fuel contained in tank 16 which changes to gas on release of pressure or the higher boiling point gasoline fuel in tank 15 may be used for starting the motor, the object of applicant's invention being to obtain flexibility in the use of either type of fuel as conditions or supply may warrant. For example, on a cold morning, or with a cold motor, it would be preferable to use the low boiling point fuel in tank 16 to start the motor and thereafter when the motor is warmed up the fuel supply coming from tank 16 may, if desired, be shut off and the gasoline supply in tank 15 turned on, although the operation of the motor can be maintained on the fuel from tank 16 if desired. There is an advantage in starting a cold motor on the low boiling point fuel from tank 16 in that liquid fuel is not deposited on the cylinder walls to wash away the lubricating oil. Furthermore, the low boiling point fuel from tank 16 has higher anti-knock value than ordinary gasoline so that where a long run on full throttle is to be made, the motor may be supplied with fuel from the tank 16 and detonation or knocking prevented.

Upon opening the valve 39 gaseous fuel passing through the metering jet 43 will pass to the annular chamber 35 surrounding the venturi 32 and

Petitioner MWE Investments, LLC, et al.
Exhibit 1008, Page 3

will thence pass inwardly through the leads 34 to be mixed with the incoming air stream drawn into the inlet end of the carbureter 5 through the air cleaner 29.

By properly selecting the orifice 44 of the metering jet 43 and the slotted orifices 34 of the venturi 32, the desired quantity of gaseous fuel to be supplied relative to the quantity of air drawn into the carburetor may be adjusted to provide a properly combustible mixture.

It will be observed that as the air is drawn through the venturi into the carbureter 5, the quantity of air so drawn will act on the venturi 32 to increase or decrease the quantity of gaseous fuel supplied in proportion to the quantity of air drawn through so that the proper combustible mixture will be maintained at various speeds of operation of the engine.

For idling purposes, when operating on the gaseous fuel, an idler connection 49 may be connected into the intake manifold 3 of the engine 2, this connection being made as by means of a tube or pipe 50 to the low pressure side of the pressure reducing valve 24. Thus at idling speeds a desirable quantity of fuel for idling may be furnished to the engine. The amount of fuel bypassed to the engine is regulated by the valve 53.

It will be observed that I have disclosed herein a system in which liquid fuel or gaseous fuel may be used in alternation with each other for supplying the required fuel to the engine. Hence the engine 2 may be supplied with high grade gaseous fuel for the greater portion of its operation and the liquid fuel may be used only when a supply of gaseous fuel is undesirable.

If desired, the valves 14 and 39 may be operated so as to cut off partly both the liquid and the gaseous fuel, so that a progressive proportioning can be utilized whereby more or less liquid or gaseous fuel can be utilized without disturbing the air fuel ratio of the mixture delivered to the engine.

While I have illustrated and described the preferred embodiment of my invention, I do not desire to be limited to any of the details shown or described herein, except as defined in the appended claims.

I claim:

1. In a fuel system for internal combustion engines, a liquid fuel supply, a gaseous fuel supply, a carbureter comprising an air passage through which air may be passed into the intake of the engine, a liquid fuel inlet communicating with the air passage of said carbureter for supplying liquid fuel to the air stream drawn through the carbureter, a cut off valve for cutting off the supply of liquid fuel to said carbureter, a gaseous fuel inlet connected to and communicating with the air passage of said carbureter, said gaseous fuel inlet including a venturi through which said air stream may pass and having openings therein through which gaseous fuel may be drawn through the venturi into the air stream, a valve interposed between said gaseous fuel inlet and said venturi, and means for simultaneously operating said valves to open one of said valves and close the other, and vice versa, to supply either liquid or gaseous fuel to said carbureter.

2. In a fuel system for internal combustion engines having a carbureter, a source of gaseous fuel, means for introducing said gaseous fuel into said carbureter comprising a tube connectible to the air inlet passage of said carbureter, a venturi in said tube having openings therein through which gaseous fuel may be passed into said tube, a gaseous fuel inlet communicating with the openings in said venturi, and a metering jet in said gaseous fuel inlet for metering the quantity of fuel supplied therethrough.

3. An attachment for a standard liquid fuel carbureter having an air supply opening, which attachment comprises a tube connectible to the air inlet passage of said carbureter, said tube having a Venturi passage therein for air drawn through said tube into the carbureter, with openings in the throat of the venturi through which gaseous fuel may flow into said tube and a gaseous fuel inlet passage communicating with the openings in the throat of the venturi.

4. An attachment for a liquid fuel carbureter having an air inlet nipple with an air cleaner slidably engageable therewith, which attachment comprises a tube dimensioned at one end to engage with the air inlet of the carbureter normally engaging with the air cleaner, and dimensioned at the opposite end to engage with the end of the air cleaner normally engaging with the carbureter inlet, whereby said tube may be inserted as a unit between the air inlet passage of the carbureter and the air cleaner, said tube being provided with gaseous fuel inlet openings and an inlet port connected thereto for connection to a supply of gaseous fuel.

GEORGE L. HOLZAPFEL.