OPERATOR'S MANUAL

MODEL #100153
7500W DUAL FUEL GENERATOR

REGISTER YOUR PRODUCT ONLINE

at **championpowerequipment.com**

TAKE IT OUTSIDE™

TAKEYOURGENERATOROUTSIDE.COM

1·877·338·0999

or visit **championpowerequipment.com**

SAVE THESE INSTRUCTIONS. This manual contains important safety precautions which should be read and understood before operating the product. Failure to do so could result in serious injury. This manual should remain with the product.

Specifications, descriptions and illustrations in this manual are as accurate as known at the time of publication, but are subject to change without notice.

Covered by one or more of the following U.S. Patent Numbers: 10,598,101, 9,435,273, D710,802, and other U.S. and foreign patents pending.

REV 20210127

Champion Power Equipment, Inc., Santa Fe Springs, CA USA

AN IMPORTANT MESSAGE ABOUT TEMPERATURE:

Your Champion Power Equipment product is designed and rated for continuous operation at ambient temperatures up to 40°C (104°F). When your product is needed your product may be operated at temperatures ranging from -15°C (5°F) to 50°C (122°F) for short periods. If the product is exposed to temperatures outside this range during storage, it should be brought back within this range before operation. In any event, the product must always be operated outdoors, in a well-ventilated area and away from doors, windows and other vents.

Have questions or need assistance?

Do not return this product to the store!

WE ARE HERE TO HELP!

Visit our website:

www.championpowerequipment.com

for more info:

- Product Info & Updates
- Frequently Asked Questions
- Tech Bulletins
- Product Registration

– or –

Call our Customer Care Team Toll-Free at:

1-877-338-0999

*We are always working to improve our products. Therefore, the enclosed product may differ slightly from the image on the cover.

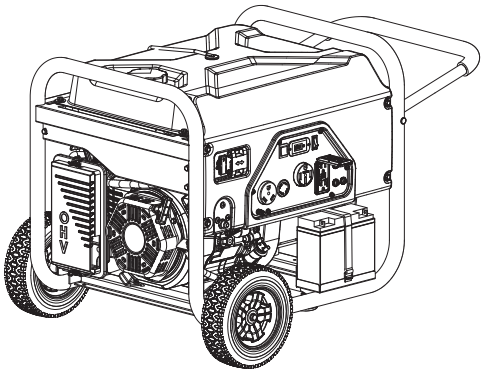

100153

9375 Starting Watts/7500 Running Watts (Gasoline)
8400 Starting Watts/6750 Running Watts (LPG)
Electric Start

DUAL FUEL GENERATOR

TABLE OF CONTENTS

Introduction . . . **1**
- Introduction . . . 1
- Portable Power Generator . . . 1
- Accessories . . . 1
- This Booklet . . . 1

Manual Conventions . . . **2**

Safety Rules . . . **3**
- Fuel Safety . . . 5

Controls and Features . . . **6**
- Generator . . . 6
- Generator Panel . . . 7
- Parts Included . . . 8
  - Wheel Kit . . . 8
  - Other . . . 8

Assembly . . . **9**
- Remove the Generator from the Shipping Carton . . . 9
- Install the Wheel Kit . . . 9
- Install the Support Leg . . . 9
- Connect the Battery . . . 9
- Add Engine Oil . . . 10
- Add Fuel (Gasoline) . . . 11
- Connecting Liquid Petroleum Gas (LPG) Cylinder . . . 12
- Grounding . . . 12

Operation . . . **13**
- Generator Location . . . 13
- Grounding . . . 13
- Surge Protection . . . 13
- Fuel Selector Switch . . . 14
- Starting the Engine . . . 14
  - Gasoline . . . 14
  - LPG . . . 15
- Stopping the Engine . . . 16
- Connecting Electrical Loads . . . 16
- GFCI . . . 16
- Do Not Overload Generator . . . 17
  - Capacity . . . 17
  - Power Management . . . 17
- Operation at High Altitude . . . 17

Maintenance and Storage . . . **18**
- Engine Maintenance . . . 18
  - Oil . . . 18
  - Spark Plugs . . . 18
  - Air Filter . . . 18
  - Spark Arrester . . . 19
  - Cleaning . . . 19
  - Adjustments . . . 19
  - Maintenance Schedule . . . 19
- Generator Maintenance . . . 19

Storage . . . **20**
  - Generator Storage . . . 20
  - Generator Battery . . . 20
  - Disconnect the Battery . . . 20
  - Charge the Battery . . . 20

Specifications . . . **21**
- Engine Specifications . . . 21
- Generator Specifications . . . 21
- Fuel . . . 21
- Spark Plugs . . . 21
- Maintenance Valve Clearance . . . 21
- An Important Message About Temperature . . . 21
- Oil . . . 21
- Wiring Diagram . . . 22
- Parts Diagram . . . 23
- Parts List . . . 24
- Engine Parts Diagram . . . 25
- Engine Parts List . . . 26

Troubleshooting . . . **27**

INTRODUCTION

Introduction

Congratulations on your purchase of a Champion Power Equipment generator. CPE designs and builds generators to strict specifications. With proper use and maintenance, this generator will bring years of satisfying service.

Portable Power Generator

This unit is a gasoline or LPG engine driven, alternating current (AC) generator. It is designed to supply electrical power for lighting, appliances, tools and similar equipment.

Accessories

Champion Power Equipment manufactures and sells accessories designed to help you get the most from your purchase. To find out more about our covers and power cables, please visit our web site at:

➔ **www.championpowerequipment.com**

This Booklet

Every effort has been made to ensure the accuracy and completeness of the information in this manual. We reserve the right to change, alter and/or improve the product and this document at any time without prior notice.

Record the model and serial numbers as well as date and place of purchase for future reference. Have this information available when ordering parts and when making technical or warranty inquiries.

Champion Power Equipment Support
1-877-338-0999
Model Number
100153
Serial Number
Date of Purchase
Purchase Location
For **Oil Type** see 'Add Engine Oil' section. For **Fuel Type** see 'Add Fuel' section.

Petitioner MWE Investments, LLC, et al. Exhibit 1080
Petitioner MWE Investments, LLC, et al. v. Champion Power Equipment, Inc.
IPR2025-01185, Page 4

MANUAL CONVENTIONS

This manual uses the following symbols to help differentiate between different kinds of information. The safety symbol is used with a key word to alert you to potential hazards in operating and owning power equipment.
Follow all safety messages to avoid or reduce the risk of serious injury or death.

DANGER

DANGER indicates an imminently hazardous situation which, if not avoided, ***will*** result in death or serious injury.

WARNING

WARNING indicates a potentially hazardous situation which, if not avoided, ***could*** result in death or serious injury.

CAUTION

CAUTION indicates a potentially hazardous situation which, if not avoided, ***may*** result in minor or moderate injury.

CAUTION

CAUTION used without the safety alert symbol indicates a potentially hazardous situation which, if not avoided, ***may*** result in property damage.

NOTE

If you have questions regarding your generator, we can help. Please call our help line at **1-877-338-0999**

Petitioner MWE Investments, LLC, et al. Exhibit 1080
Petitioner MWE Investments, LLC, et al. v. Champion Power Equipment, Inc.
IPR2025-01185, Page 5

SAFETY RULES

⚠ WARNING

Read this manual thoroughly before operating your generator. Failure to follow instructions could result in serious injury or death.

⚠ WARNING

Cancer and Reproductive Harm – www.P65Warnings.ca.gov

⚠ DANGER

Generator exhaust contains carbon monoxide, a colorless, odorless, poison gas. Breathing carbon monoxide will cause nausea, dizziness, fainting or death. If you start to feel dizzy or weak, get to fresh air immediately.

Operate generator outdoors only in a well ventilated area.
DO NOT operate the generator inside any building, including garages, basements, crawlspaces and sheds, enclosure or compartment, including the generator compartment of a recreational vehicle.
DO NOT allow exhaust fumes to enter a confined area through windows, doors, vents or other openings.
DANGER CARBON MONOXIDE: using a generator indoors **CAN KILL YOU IN MINUTES**.

⚠ DANGER

Rotating parts can entangle hands, feet, hair, clothing and/or accessories.
Traumatic amputation or severe laceration can result.

Keep hands and feet away from rotating parts.
Tie up long hair and remove jewelry.
Operate equipment with guards in place.
DO NOT wear loose-fitting clothing, dangling drawstrings or items that could become caught.

⚠ DANGER

Generator produces powerful voltage.

DO NOT touch bare wires or receptacles.
DO NOT use electrical cords that are worn, damaged or frayed.
DO NOT operate generator in wet weather.
DO NOT allow children or unqualified persons to operate or service the generator
Use a ground fault circuit interrupter (GFCI) in damp areas and areas containing conductive material such as metal decking.
Use approved transfer equipment to isolate generator from your electric utility and Notify your utility company before connecting your generator to your power system.

⚠ WARNING

Sparks can result in fire or electrical shock.

When servicing the generator:
Disconnect the spark plug wire and place it where it cannot contact the plug.
DO NOT check for spark with the plug removed.
Use only approved spark plug testers.

⚠ WARNING

Running engines produce heat. Severe burns can occur on contact.
Combustible material can catch fire on contact.

DO NOT touch hot surfaces.
Avoid contact with hot exhaust gases.
Allow equipment to cool before touching.
Maintain at least 3 ft. (91.4 cm) of clearance on all sides to ensure adequate cooling.
Maintain at least 5 ft. (1.5 m) of clearance from combustible materials.

Petitioner MWE Investments, LLC, et al. Exhibit 1080
Petitioner MWE Investments, LLC, et al. v. Champion Power Equipment, Inc.
IPR2025-01185, Page 6

⚠ WARNING

Rapid retraction of the starter cord will pull hand and arm towards the engine faster than you can let go. Unintentional startup can result in entanglement, traumatic amputation or laceration.
Broken bones, fractures, bruises or sprains could result.

When starting engine, pull the starter cord slowly until resistance is felt and then pull rapidly to avoid kickback.
DO NOT start or stop the engine with electrical devices plugged in.

ⓘ CAUTION

Exceeding the generator's running capacity can damage the generator and/or electrical devices connected to it.

DO NOT overload the generator.
Start the generator and allow the engine to stabilize before connecting electrical loads.
Connect electrical equipment in the off position, and then turn them on for operation.
Turn electrical equipment off and disconnect before stopping the generator.
DO NOT tamper with the governed speed.
DO NOT modify the generator in any way.

⚠ WARNING

For the GFCI receptacles to work properly the neutral wire must be bonded to ground or to the generator frame. Your Champion generator comes with the neutral wire already bonded to the frame. If the bonding wire is removed then the GFCI receptacles will no longer function as designed. If the neutral bonding wire is removed to accommodate a transfer switch installation for connection to a house or building, then the transfer switch must not switch off the neutral connection to ground within the building. Champion Power Equipment recommends that you consult with a licensed, local electrician. Due to the variety of local codes, we cannot specifically advise you regarding modifications to the wiring of your portable generator.

ⓘ CAUTION

Improper treatment or use of the generator can damage it, shorten its life and void your warranty.

Use the generator only for intended uses.
Operate only on level surfaces.
DO NOT expose generator to excessive moisture, dust, or dirt.
DO NOT allow any material to block the cooling slots.
If connected devices overheat, turn them off and disconnect them from the generator.
DO NOT use the generator if:
- Electrical output is lost
- Equipment sparks, smokes or emits flames
- Equipment vibrates excessively

⚠ WARNING

Operation of this equipment may create sparks that can start fires around dry vegetation.

A spark arrestor may be required. The operator should contact local fire agencies for laws or regulations relating to fire prevention requirements.

⚠ WARNING

Medical and Life Support Uses.

In case of emergency, call 911 immediately.
NEVER use this product to power life support devices or life support appliances.
NEVER use this product to power medical devices or medical appliances.
Inform your electricity provider immediately if you or anyone in your household depends on electrical equipment to live.
Inform your electrical provider immediately if a loss of power would cause you or anyone in your household to experience a medical emergency.

Petitioner MWE Investments, LLC, et al. Exhibit 1080
Petitioner MWE Investments, LLC, et al. v. Champion Power Equipment, Inc.
IPR2025-01185, Page 7

SAFETY RULES

Fuel Safety

⚠ DANGER

GASOLINE, GASOLINE VAPORS AND LIQUID PETROLEUM GAS (LPG) ARE HIGHLY FLAMMABLE AND EXPLOSIVE.
Fire or explosion can cause severe burns or death. Unintentional startup can result in entanglement, traumatic amputation or laceration.

Gasoline and Gasoline Vapors (Gas):

- GASOLINE IS HIGHLY FLAMMABLE AND EXPLOSIVE.
- Gasoline can cause a fire or explosion if ignited.
- Gasoline is a liquid fuel but it's vapors can ignite.
- Gasoline is a skin irritant and needs to be cleaned up immediately if spilled on skin or clothes.
- Gas has a distinctive odor, this will help detect potential leaks quickly.
- In any gas fire, flames should not be extinguished unless by doing so the fuel supply valve can be turned OFF. This is because if a fire is extinguished and a supply of fuel is not turned OFF, then an explosion hazard could be created.
- Gas expands or contracts with ambient temperatures. Never fill the gas tank to full capacity, as gas needs room to expand if temperatures rise.

Liquefied Petroleum Gas (LPG):

- LPG IS HIGHLY FLAMMABLE AND EXPLOSIVE.
- Flammable gas under pressure can cause a fire or explosion if ignited.
- LPG is heavier than air and can settle in low places while dissipating.
- LPG has a distinctive odor added to help detect potential leaks quickly.
- In any petroleum gas fire, flames should not be extinguished unless by doing so the fuel supply valve can be turned OFF. This is because if a fire is extinguished and a supply of fuel is not turned OFF, then an explosion hazard could be created.
- When exchanging LPG cylinders, be sure the cylinder valve is of the same type.
- Always keep the LPG cylinder in an upright position.
- LPG will burn skin if it comes in contact with it. Keep any and all LPG away from skin at all times.

When adding or removing Gasoline:

Turn the generator off and let it cool for at least two minutes before removing the fuel cap. Loosen the cap slowly to relieve pressure in the tank.
Only fill or drain fuel outdoors in a well-ventilated area.
DO NOT pump gas directly into the generator at the gas station. Use an approved container to transfer the fuel to the generator.
DO NOT overfill the fuel tank.
Always keep fuel away from sparks, open flames, pilot lights, heat and other sources of ignition.
DO NOT light or smoke cigarettes.

When starting the generator:

DO NOT attempt to start a damaged generator.
Make certain that the gas cap, air filter, spark plug, fuel lines and exhaust system are properly in place.
Allow spilled fuel to evaporate fully before attempting to start the engine.
Make certain that the generator is resting firmly on level ground.

When operating the generator:

DO NOT move or tip the generator during operation.
DO NOT tip the generator or allow fuel or oil to spill.

When transporting or servicing the generator:

Make certain that the fuel shutoff valve is in the off position and the fuel tank is empty.
Make certain that a LPG cylinder is not attached to generator and is securely stowed away.
Disconnect the spark plug wire.

When storing the generator:

Store away from sparks, open flames, pilot lights, heat and other sources of ignition.
Do not store generator, gas or LPG cylinder near furnances, water heaters, or any other appliances that produce heat or have automatic ignitions.

⚠ WARNING

Never use a gas container, LPG connector hose, gas tank, LPG cylinder or any other fuel item that is damaged or appears damaged.

Petitioner MWE Investments, LLC, et al. Exhibit 1080
Petitioner MWE Investments, LLC, et al. v. Champion Power Equipment, Inc.
IPR2025-01185, Page 8

CONTROLS AND FEATURES

Read this owner's manual before operating your generator. Familiarize yourself with the location and function of the controls and features. Save this manual for future reference.

Generator

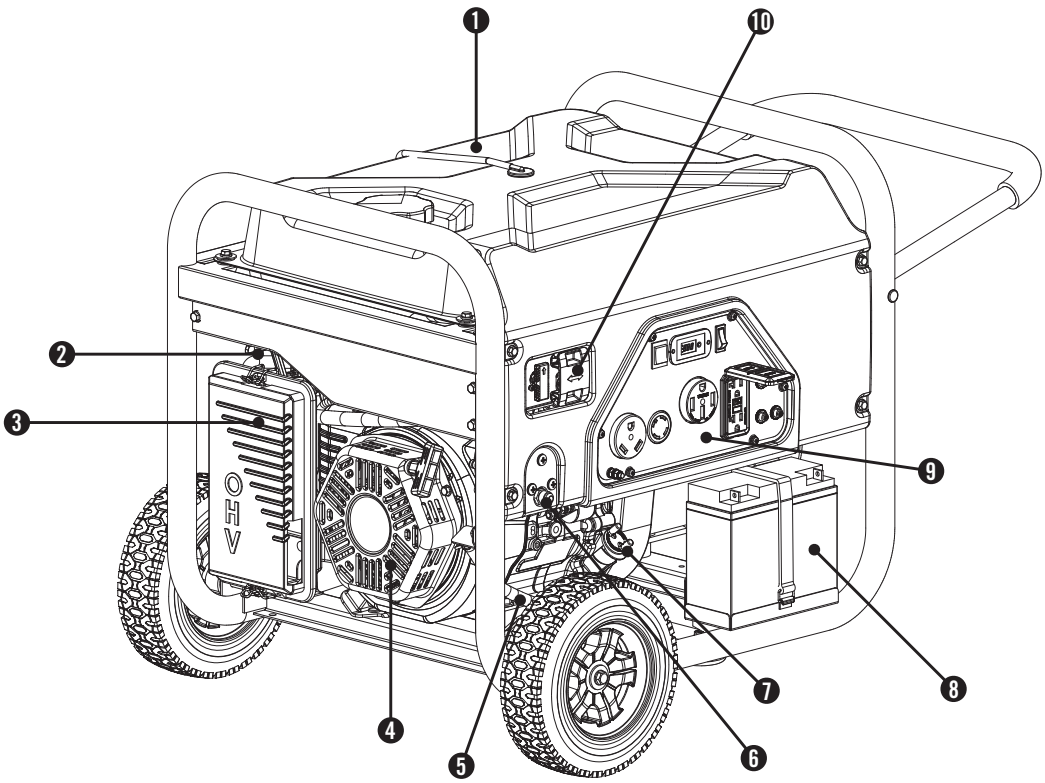

(1) **Gas Fuel Tank** – 6 gal. (22.9 L) capacity fuel tank.

(2) **Choke** – Used to start the engine.

(3) **Air Cleaner** – Protects the engine by filtering dust and debris from the intake air.

(4) **Recoil Starter** – Used to manually start the engine.

(5) **Quick Drain Tube** – Used to easily and quickly drain oil from the engine.

(6) **LPG Hose Connector**

(7) **Oil Filler Cap** – Check and fill engine oil level.

(8) **Battery** – Used to start the engine electrically.

(9) **Power Panel** – See "Power Panel" section.

(10) **Fuel Selector Switch** – Used to select fuel source.

Petitioner MWE Investments, LLC, et al. Exhibit 1080
Petitioner MWE Investments, LLC, et al. v. Champion Power Equipment, Inc.
IPR2025-01185, Page 9

CONTROLS AND FEATURES

Generator Panel

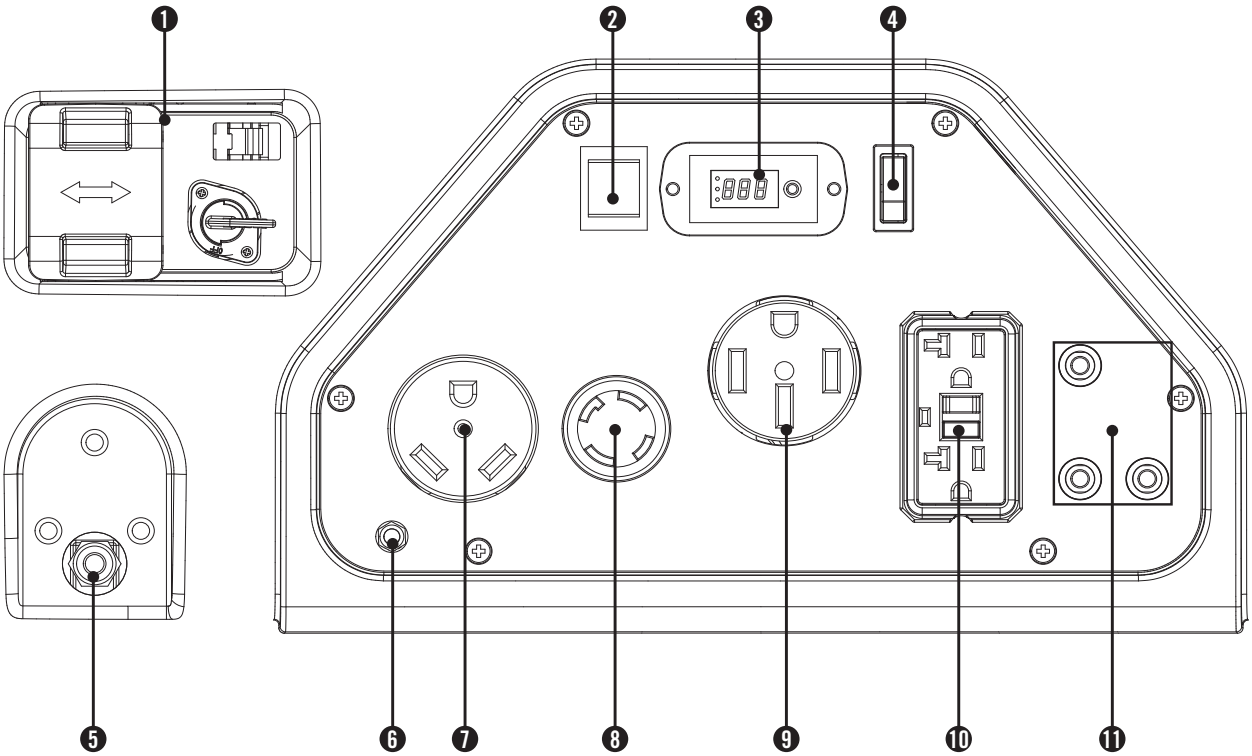

(1) **Fuel Selector Switch** – Used to select and turn on gasoline or LPG fuel source.

(2) **Ignition Switch –** Used to start or stop the generator. When operating by propane, this switch will NOT stop the engine.

(3) **Intelligauge** – Three mode digital meter for displaying running hours, voltage and hertz.

(4) **Battery Switch** – Enables/disables starting electrically.

(5) **LPG Hose Connector** – Used to connect LPG hose to generator.

(6) **Ground Terminal** – Consult an electrician for local grounding regulations.

(7) **120 Volt AC, 30 Amp Recreational Vehicle (RV) Receptacle** (NEMA TT-30R) – May be used to supply electrical power for the operation of 120 Volt AC, 30 Amp, single phase 60 Hz electrical loads.

(8) **120/240 Volt AC, 30 Amp Twist-Lock Receptacle** (NEMA L14-30R) – May be used to supply electrical power for the operation of 120 and/or 240 Volt AC, 30 Amp, single phase 60 Hz electrical loads.

(9) **120/240 Volt AC, 50 Amp Receptacle** (NEMA 14-50R) – May be used to supply electrical power for the opertaion of 120 and/or 240 Volt AC, 50 Amp, single phase 60 Hz electrical loads.

(10) **120 Volt AC, 20 Amp Duplex** (GFCI 5-20R) – May be used to supply electrical power for the operation of 120 Volt AC, 20 Amp, single phase 60 Hz electrical loads.

(11) **Circuit Breakers**

Petitioner MWE Investments, LLC, et al. Exhibit 1080
Petitioner MWE Investments, LLC, et al. v. Champion Power Equipment, Inc.
IPR2025-01185, Page 10

Parts Included

Your 100153 dual fuel generator ships with the following parts:

Wheel Kit

- 9.5 in. (24.1 cm) Wheel 2
- Flange Bolt (M10x120 for Wheel) 2
- Bushing 2
- Flat Washer ø10 2
- Lock Nut (M10) 2
- Support Leg w/Vibration Mounts 1
- Flange Bolt (M8x16 for Support Leg) 2
- Flange Lock Nut (M8) 2

Other

- Oil . . . . . 1.2 qt. (1.1 L)
- LPG Hose With Regulator 3.3 ft. (1 m) 1
- Oil Funnel 1
- Flange Bolt (M5x10 for Battery Terminals) 2
- Flange Nut (M5) 2

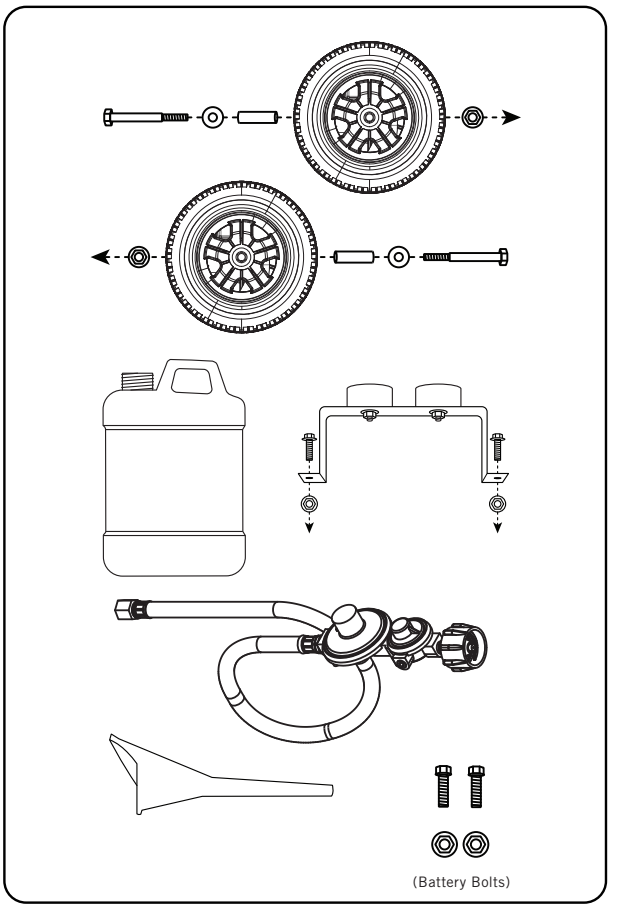

Petitioner MWE Investments, LLC, et al. Exhibit 1080
Petitioner MWE Investments, LLC, et al. v. Champion Power Equipment, Inc.
IPR2025-01185, Page 11

ASSEMBLY

Your generator requires some assembly. This unit ships from our factory without oil. It must be properly serviced with fuel and oil before operation.
If you have any questions regarding the assembly of your generator, call our help line at 1-877-338-0999. Please have your serial number and model number available.

Remove the Generator from the Shipping Carton

1. Set the shipping carton on a solid, flat surface.
2. Remove everything from the carton except the generator.
3. Carefully cut each corner of the box from top to bottom. Fold each side flat on the ground to provide a surface area to install the wheel kit and support leg.

Install the Wheel Kit

CAUTION

The wheel kit is not intended for over-the-road use.

You will need the following tools to install the wheels:

- 17 mm wrench OR adjustable wrench (not included)
- Socket wrench with a 16 mm socket (not included)
- Pliers (not included)

1. Before adding fuel and oil, tip the generator on it's side.
2. Slide the M10x120 wheel bolt through the flat washer ø10, bushing and wheel.
3. Slide the bolt through the mount point on the frame.
4. Fasten securely with the M10 lock nut.
5. Repeat steps 2-4 to attach the second wheel.

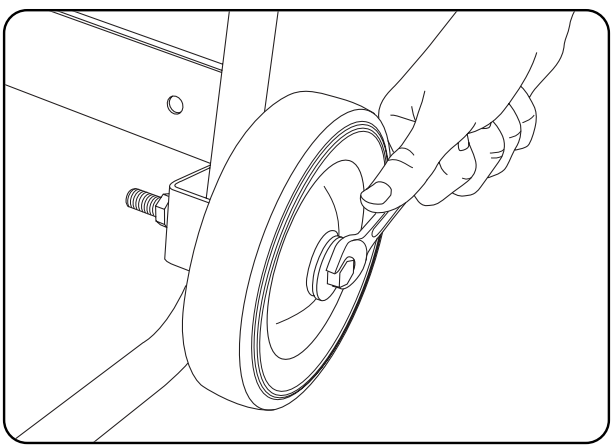

Install the Support Leg

1. Attach the support leg to the generator frame with flange bolt (M8x16) and flange lock nuts (M8).
2. Tip the generator slowly so that it rests on the wheels and support leg.

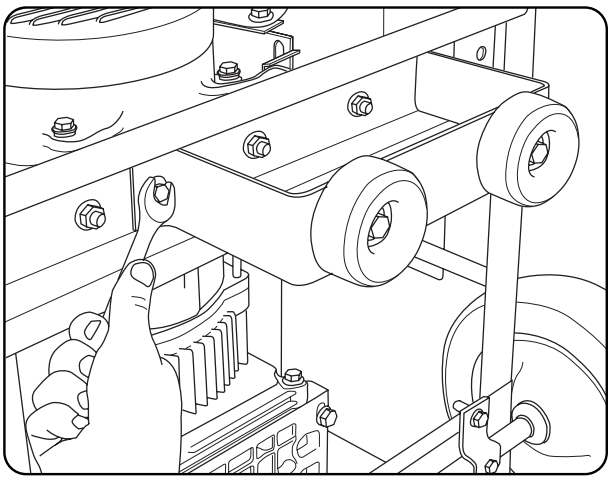

Connect the Battery

1. Remove the protective cover from the red (+) lead on the battery.
2. Attach the red (+)lead to the red (+) terminal on the battery with the flange bolt (M5x10) and secure with the flange nut (M5).
3. Repeat steps 1-2 for the black (–) battery lead.

Petitioner MWE Investments, LLC, et al. Exhibit 1080
Petitioner MWE Investments, LLC, et al. v. Champion Power Equipment, Inc.
IPR2025-01185, Page 12

Add Engine Oil

CAUTION

DO NOT attempt to crank or start the engine before it has been properly filled with the recommended type and amount of oil. Damage to the generator as a result of failure to follow these instructions will void your warranty.

NOTE

The generator rotor has a sealed, pre-lubricated ball bearing that requires no additional lubrication for the life of the bearing.

NOTE

The recommended oil type is 10W-30 automotive oil.

1. Place the generator on a flat, level surface.

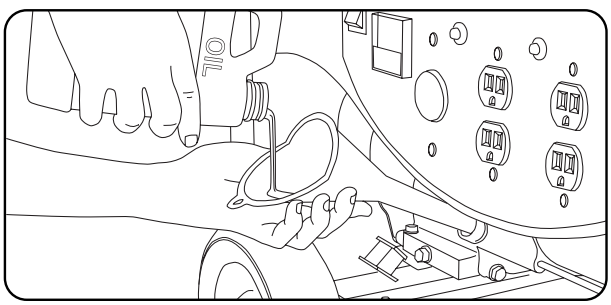

2. Remove oil fill cap/dipstick to add oil.
3. Add up to 1.2 qt. (1.1 L) of oil (included) and replace oil fill cap/dipstick. DO NOT OVERFILL.
4. Check engine oil level daily and add as needed.

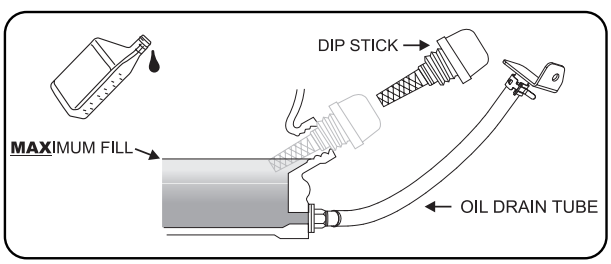

NOTE

Once oil has been added, a visual check should show oil about 1-2 threads from running out of the fill hole. If using the dipstick to check oil level, DO NOT screw in the dipstick while checking.

Add Engine Oil Cont'd.

NOTE

Check oil often during the break-in period. Refer to the Maintenance section for recommended service intervals.

CAUTION

The engine is equipped with a low oil shut-off and will stop when the oil level in the crankcase falls below the threshold level.

NOTE

We consider the first 5 hours of run time to be the break-in period for the unit. During the break in period stay at or below 50% of the running watt rating and vary the load occasionally to allow stator windings to heat and cool. Adjusting the load will also cause engine speed to vary and help seat piston rings. After the 5 hour break-in period, change the oil.

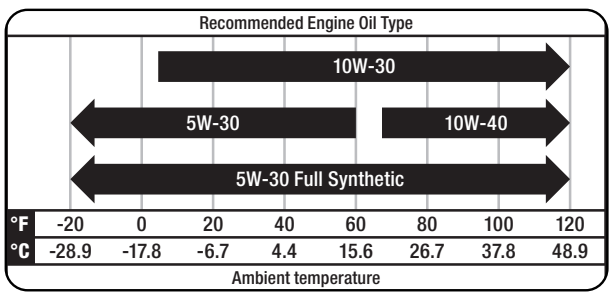

NOTE

Weather will affect engine oil and engine performance. Change the type of engine oil used based on weather conditions to suit the engine needs.

NOTE

Synthetic oil may be used after the 5 hour initial break-in period. Using synthetic oil does not increase the recommended oil change interval. Full synthetic 5W-30 oil will aid in starting in cold ambient <5°C (41°F)

Petitioner MWE Investments, LLC, et al. Exhibit 1080
Petitioner MWE Investments, LLC, et al. v. Champion Power Equipment, Inc.
IPR2025-01185, Page 13

ASSEMBLY

Add Fuel (Gasoline)

1. Use clean, fresh, regular unleaded fuel with a minimum octane rating of 87 and an ethanol content of less than 10% by volume.
2. DO NOT mix oil with fuel.
3. Clean the area around the fuel cap.
4. Remove the fuel cap.
5. Slowly add fuel to the tank. DO NOT OVERFILL. Fuel can expand after filling. A minimum of ¼ in. (6.4 mm) of space left in the tank is required for fuel expansion, more than ¼ in. (6.4 mm) is recommended. Fuel can be forced out of the tank as a result of expansion if it is overfilled, and can affect the stable running condition of the product. When filling the tank, it is recommended to leave enough space for the fuel to expand.

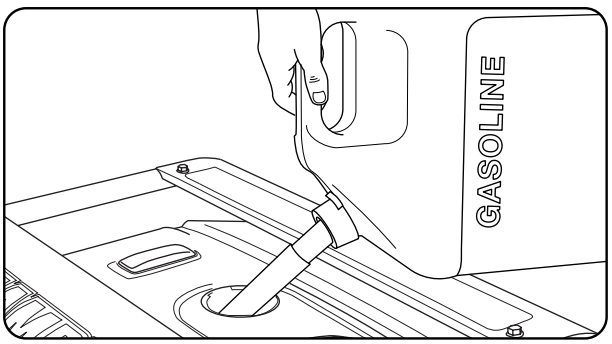

6. Screw on the fuel cap and wipe away any spilled fuel.

CAUTION

Use regular unleaded gasoline with a minimum octane rating of 87.

Do not mix oil and gasoline.
Fill tank to approximately ¼ in. (6.4 mm) below the top of the tank to allow for fuel expansion.
DO NOT pump gas directly into the generator at the gas station. Use an approved container to transfer the fuel to the generator.
DO NOT fill fuel tank indoors.
DO NOT fill fuel tank when the engine is running or hot.
DO NOT overfill the fuel tank.
DO NOT light cigarettes or smoke when filling the fuel tank.

Add Fuel (Gasoline) Cont'd.

WARNING

Pouring fuel too fast through the fuel screen may result in blow back of fuel at the operator while filling.

NOTE

Our engines work well with 10% or less ethanol blend fuels. When using blended fuels there are some issues worth noting:

- Ethanol-gasoline blends can absorb more water than gasoline alone.
- These blends can eventually separate, leaving water or a watery goo in the tank, fuel valve and carburetor.
- With gravity-fed fuel supplies, this compromised fuel can be drawn into the carburetor and cause damage to the engine and/or potential hazards.
- There are only a few suppliers of fuel stabilizer that are formulated to work with ethanol blend fuels.
- Any damages or hazards caused by using improper fuel, improperly stored fuel, and/or improperly formulated stabilizers, are not covered by manufacture's warranty.

It is advisable to always shut off the fuel supply, run the engine to fuel starvation and drain the tank when the equipment is not in use for more than 30 days.

Petitioner MWE Investments, LLC, et al. Exhibit 1080
Petitioner MWE Investments, LLC, et al. v. Champion Power Equipment, Inc.
IPR2025-01185, Page 14

Connecting Liquid Petroleum Gas (LPG) Cylinder

1. Make sure the fuel valve on the generator is in the off position.
2. Attach the LPG hose (included) to the LPG hose connector on the side of the generator and tighten with a 19 mm or adjustable wrench.
   Important: DO NOT use tape or any other type of sealant to seal LPG hose connection.
3. Remove the safety plug or cap from the cylinder valve.
4. Attach the other end of the hose to the LPG connector on the cylinder and hand tighten.
5. Check all connections for leaks by wetting the fittings with a solution of soap and water. Bubbles which appear or bubbles which grow indicate that a leak exists. If a leak exists at a fitting then turn off the gas valve at the tank and tighten the fitting. Turn the gas back on and recheck the fitting with the soap and water solution. If the leak continues or if the leak is not at a fitting then do not use the generator and contact customer service.

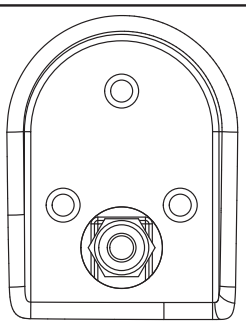

NOTE

- Use only standard 20 or 30 pound capacity LP tanks with Type 1, right hand Acme threads.
- Verify the requalification date on the tank has not expired.
- All new cylinders must be purged of air and moisture prior to filling. Used cylinders that have not been plugged or kept closed must also be purged.
- The purging process should be done by a LPG supplier. (Cylinders from an exchange supplier should have been purged and filled properly already).
- Always position the cylinder so the connection between the valve and the gas inlet won't cause sharp bends or kinks in the hose.

Connecting LPG Cylinder Cont'd.

CAUTION

Do not allow children to tamper or play with the cylinder or hose connections.

CAUTION

Use approved LPG cylinders equipped with an OPD (overfilling prevention device) valve. Always keep the cylinder in a vertical position with the valve on top and installed at ground level on a flat surface Cylinders must not be installed near any heat source and should not be exposed to sun, rain, and dust. When transporting and storing, turn off the cylinder valve and fuel valve, and disconnect the cylinder. Plug the outlet, usually by a plastic protective cap, if one is available. Keep cylinders away from heat and ventilated when in a vehicle.

WARNING

If there is a strong smell of gas: Close off the gas supply at the cylinder. Use soapy water, which will produce a large bubble at the point of any leak, to check the hose, and connections on the cylinder valve and the generator. Do not smoke or light a cigarette, or check for leaks using a match, open flame source or lighter. Contact a qualified technician to inspect and repair the LPG system if a leak is found, before using the generator.

Grounding

Your generator must be properly connected to an appropriate ground to help prevent electric shock.

WARNING

Failure to properly ground the generator can result in electric shock.

A ground terminal connected to the frame of the generator has been provided on the power panel. For remote grounding, connect of a length of heavy gauge (12 AWG minimum) copper wire between the generator ground terminal and a copper rod driven into the ground. We strongly recommend that you consult with a qualified electrician to ensure compliance with local electrical codes.

Petitioner MWE Investments, LLC, et al. Exhibit 1080
Petitioner MWE Investments, LLC, et al. v. Champion Power Equipment, Inc.
IPR2025-01185, Page 15

OPERATION

Generator Location

NEVER operate the generator inside any building, including garages, basements, crawlspaces and sheds, enclosure or compartment, including the generator compartment of a recreational vehicle. Please consult your local authority. In some areas, generators must be registered with the local utility. Generators used at construction sites may be subject to additional rules and regulations. Generators should be on a flat, level surface at all times. (Even while not in operation) Generators must have at least 5 ft. (1.5 m) of clearance from all combustible material. In addition to clearance from all combustible material, generators must also have at least 3 ft. (91.4 cm) of clearance on all sides to allow for adequate cooling, maintenance and servicing. Generators should never be started or operated in the back of a SUV, camper, trailer, in the bed of a truck (regular, flat or otherwise), under staircases/stairwells, next to walls or buildings, or in any other location that will not allow for adequate cooling of the generator and/or the muffler. DO NOT contain generators during operation. Allow generators to properly cool before transport or storage.

Place the generator in a well-ventilated area. DO NOT place the generator near vents or intakes where exhaust fumes could be drawn into occupied or confined spaces. Carefully consider wind and air currents when positioning generator.

Failure to follow proper safety precautions may void manufacturer's warranty.

⚠ WARNING

Do not operate or store the generator in rain, snow, or wet weather.

Using a generator or electrical appliance in wet conditions, such as rain or snow, or near a pool or sprinkler system, or when your hands are wet, could result in electrocution.

⚠ WARNING

During operation the muffler and exhaust fumes produced will become hot. If adequate cooling and breathing space are not supplied, or if the generator is blocked or contained, temperatures can become extremely heated and may lead to fire.

Grounding

The generator system ground connects the frame to the ground terminals on the power panel. The system ground is connected to the AC neutral wire.

Surge Protection

CAUTION

Voltage fluctuation may impair the proper functioning of sensitive electronic equipment.

Electronic devices, including computers and many programmable appliances use components that are designed to operate within a narrow voltage range and may be affected by momentary voltage fluctuations. While there is no way to prevent voltage fluctuations, you can take steps to protect sensitive electronic equipment.

1. *Install UL1449, CSA-listed, plug-in surge suppressors on the outlets feeding your sensitive equipment.* Surge suppressors come in single- or multi-outlet styles. They're designed to protect against virtually all short-duration voltage fluctuations.

Petitioner MWE Investments, LLC, et al. Exhibit 1080
Petitioner MWE Investments, LLC, et al. v. Champion Power Equipment, Inc.
IPR2025-01185, Page 16

Fuel Selector Switch

The fuel selector switch on the front panel of the generator is designed specifically to choose between the fuel source desired, Gas or LPG.
To select a fuel source simply slide the switch cover to either the right or left, and this will uncover the fuel valve of the fuel selected.
The LPG fuel valve (A) is to the left of the switch cover.
The gas fuel valve (B) is to the right of the switch cover.

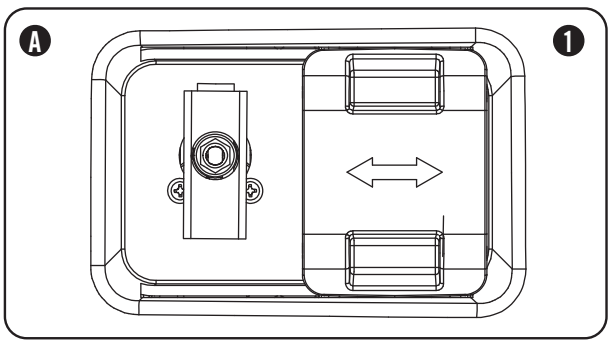

Once a fuel source has been selected, the user must turn the fuel valve to the vertical position to open the fuel valve. (1)

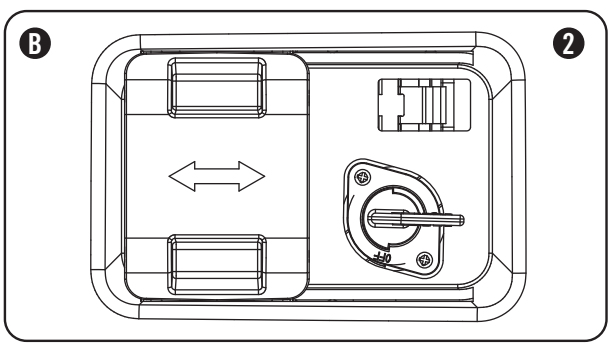

To turn a fuel valve to the off position the valve must be in the horizontal position. (2)

NOTE

The fuel selector switch cover is specifically designed not to slide to either side while a specific fuel has been selected and the valve is in the "ON" position. Only when the fuel valves are in the "OFF" position can the cover slide side to side.

NOTE

The fuel selector is locked into place once a "CLICK" sound is made. Only then can a fuel valve be turned to the vertical position.

Starting the Engine in ambient > 15°C (59°F)

Gasoline

1. Make certain the generator is on a flat, level surface.
2. Disconnect all electrical loads from the generator. Never start or stop the generator with electrical devices plugged in or turned on.
3. Turn the gasoline fuel valve to the "ON" position.
4. Move the choke lever to the "100% CHOKE" detent position.
   a. For restarting a warm engine, move the choke lever to the "75% CHOKE" detent position.
5. Push the battery switch to the "ON" position.
6. Push the ignition switch to the "ON" position.
7. ELECTRIC START: Press and hold the ignition switch to the "START" position. Release as the engine begins to start. If the engine fails to start within five seconds, release the switch and wait at least ten seconds before attempting to start the engine again.
8. RECOIL START: Pull the starter cord slowly until resistance is felt and then pull rapidly.
9. Do not over-choke. As soon as engine starts, gradually move the choke lever to the "RUN" position over a 2-5 second duration.

NOTE

Keep choke lever in "Choke" position for only 1 pull of the recoil starter. After first pull, move choke lever to the "Run" position for up to the next 3 pulls of the recoil starter. Too much choke leads to sparkplug fouling/engine flooding due to the lack of incoming air. This will cause the engine not to start.

NOTE

For restarts with hot engine in hot ambient > 30°C (86°F) Keep choke lever in "75% Choke" detent position for only 1 pull of the recoil starter. After first pull, move choke lever to the "Run" position for up to the next 3 pulls of the recoil starter. Too much choke leads to sparkplug fouling/engine flooding due to the lack of incoming air. This will cause the engine not to start.

NOTE

For gasoline starting in in cold ambient < 15°C (59°F) the choke must be in the 100% "CHOKE" detent position for both electric and recoil start procedures. Do not over-choke. As soon as engine starts, gradually move the choke lever to the "RUN" position over a 5-20 second duration.

Petitioner MWE Investments, LLC, et al. Exhibit 1080
Petitioner MWE Investments, LLC, et al. v. Champion Power Equipment, Inc.
IPR2025-01185, Page 17

OPERATION

LPG

1. Make certain the generator is on a flat, level surface.
2. Disconnect all electrical loads from the generator. Never start or stop the generator with electrical devices plugged in or turned on.
3. Fully open the LPG cylinder fuel knob.
4. Turn the LPG fuel valve to the "ON" position.
5. Push the battery switch to the "ON" position.
6. Push the ignition switch to the "ON" position.
7. ELECTRIC START: Move the choke lever to the "75% Choke" detent position.
   a. For restarting a warm engine, move the choke lever to the "75% CHOKE" detent position.
8. Press and hold the ignition switch to the "START" position. Release as the engine begins to start. If the engine fails to start within five seconds, release the switch and wait at least ten seconds before attempting to start the engine again.
9. Do not over-choke. As soon as engine starts, gradually move the choke lever to the "RUN" position over a 2-5 second duration.
10. RECOIL START: Move the choke lever to the "100% Choke" detent position.
    a. For restarting a warm engine, move the choke lever to the "100% CHOKE" detent position.
11. PULL-TO-PRIME: Pull the starter cord slowly until resistance is felt and then pull rapidly. Pull with "100% Choke" 1-2 times until you feel a few combustion pulses that indicates that the engine momentarily started.
12. Move the choke lever to the "RUN" position.
13. Pull the starter cord slowly until resistance is felt and then pull rapidly.
14. If engine fails to start in 1-pull with choke in the "RUN", then move choke to "100% Choke" and repeat the PULL-TO-PRIME step.

NOTE

For LPG starting in cold ambient < 15°C (59°F) Move the choke lever to the "75% Choke" position for electric starting and "100% Choke" for recoil start. For electric start, gradually move the choke lever to the "RUN" position over a 2-10 second duration. To pull to prime for recoil start Pull with "100% Choke" 1-3 times until you feel a few combustion pulses that indicates that the engine momentarily started.

Starting the Engine Cont'd.

CAUTION

If the ignition switch is held down in the "Start" position longer than 5 seconds it could damage the starter.

NOTE

If the engine starts but does not run make certain that the generator is on a flat, level surface. The engine is equipped with a low oil sensor that will prevent the engine from running when the oil level falls below a critical threshold.

NOTE

When the battery switch is in the "ON" position, the switch will light up if the battery is sending out a charge. If the switch does not light up while in the "ON" position, check that the battery connection is still good.

NOTE

The supplied 12V 15AH battery does re-charge while the engine is running, but it is also recommended that the battery be fully charged at least once per month.

NOTE

Observing frost on LPG containers and regulators is common during operation and normally is not an indication of a problem. As LPG vaporizes and travels from the tank to the generator engine it expands. The amount of frost that forms can be affected by the size of the container, the amount of fuel being used, the humidity of the air and other operating conditions. In unusual situations this frost may eventually restrict the flow of gas to the generator resulting in deteriorating performance. For example, if the tank temperature is reduced to a very low level then the rate at which the LPG vaporizes is also reduced and may not provide sufficient fuel flow to the engine. This is not an indication of a problem with the generator but only a problem with the flow of gas from the LPG container. If generator performance seems to be deteriorating at the same time that ice formation is observed on tank valve, hose or regulator then some actions may be taken to eliminate this symptom.

In these rare situations it can be helpful to reduce or eliminate the cold fuel system effects by doing one of the following:

- Exchanging fuel tanks to allow the first tank to warm up, repeating as necessary
- Placing the LPG container at the end of the generator near the handle, where engine fan air flows out from the generator. This air is slightly heated by flowing over the engine. The container should not be placed in the path of the muffler outlet.
- The container can be temporarily warmed by pouring warm water over the top of the tank.

Petitioner MWE Investments, LLC, et al. Exhibit 1080
Petitioner MWE Investments, LLC, et al. v. Champion Power Equipment, Inc.
IPR2025-01185, Page 18

Stopping the Engine

1. Turn off and unplug all electrical loads. Never start or stop the generator with electrical devices plugged in or turned on.
2. Let the generator run at no-load for several minutes to stabilize internal temperatures of the engine and generator.
3. Turn the Gasoline Fuel Valve to the “OFF” position if operating by gas.
4. Turn the LPG cylinder knob to the “CLOSE” or off position if operating by LPG.
5. Let the engine run until fuel starvation has stopped the engine. This usually takes a few minutes.
6. Press the ignition switch to the “OFF” position.
7. Turn battery switch to the “Off” Position.

Important: Always ensure that the Fuel Valve and the Ignition Switch are in the “OFF” position when the engine is not in use.

NOTE

When turning off the generator after LPG operation, make sure the LPG cylinder knob is in the fully closed position.

NOTE

If the engine will not be used for a period of two (2) weeks or longer, please see the Storage section for proper engine and fuel storage.

Connecting Electrical Loads

1. Let the engine stabilize and warm up for a few minutes after starting
2. Plug in and turn on the desired 120/240 Volt AC single phase, 60 Hz electrical loads.

– DO NOT connect 3-phase loads to the generator.
– DO NOT connect 50 Hz loads to the generator.
– DO NOT overload the generator.

NOTE

Connecting a generator to your electric utility company’s power lines or to another power source may be against the law. In addition this action, if done incorrectly, could damage your generator and appliances and could cause serious injury or even death to you or a utility worker who may be working on nearby power lines. If you plan to run a portable electric generator during an outage, please notify your electric utility company immediately and remember to plug your appliances directly into the generator. Do not plug the generator into any electric outlet in your home. Doing so could create a connection to the utility company power lines. You are responsible for ensuring that your generator’s electricity does not feed back into the electric utility power lines.
If the generator will be connected to a building electrical system, consult your local utility company or a qualified electrician. Connections must isolate generator power from utility power and must comply with all applicable laws and codes.

GFCI

Your generator is equipped with two (2) Ground Fault Circuit Interrupter (GFCI) duplexes. In the event of a ground fault, a GFCI trips automatically to stop the flow of electricity and prevent serious injury. The green indicating light on the receptacle will also turn off. Press the reset button located on the front of the receptacle to restore flow of electricity. (A) The green indicating light will also turn back on. GFCI does not protect against circuit overloads.

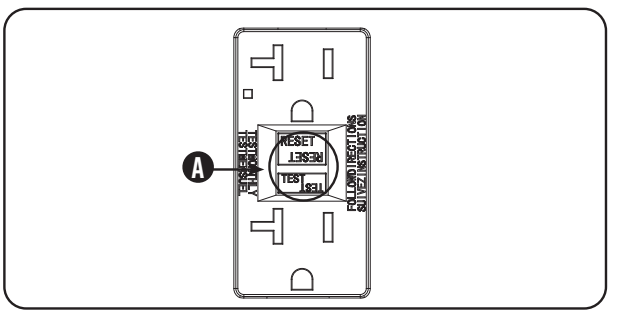

To ensure proper operation of the GFCI duplex, perform this test monthly:

1. With the generator running, plug a lamp into the GFCI receptacle. Turn the lamp on.
2. Press the “Test” button located on the front of the receptacle to trip the device. (A) This should immediately stop the flow of electricity and shut off the lamp. If the electricity is not stopped, do not use this receptacle until is has been serviced or replaced.
3. Press the “Reset” button located on the front of the receptacle to restore the flow of electricity. If the indicator light does not go out and come back on or if the GFCI cannot be reset then it must be replaced.

⚠ WARNING

For the GFCI receptacles to work properly the neutral wire must be bonded to ground or to the generator frame. Your Champion generator comes with the neutral wire already bonded to the frame. If the bonding wire is removed then the GFCI receptacles will no longer function as designed. If the neutral bonding wire is removed to accommodate a transfer switch installation for connection to a house or building, then the transfer switch must not switch off the neutral connection to ground within the building. Champion Power Equipment recommends that you consult with a licensed, local electrician. Due to the variety of local codes, we cannot specifically advise you regarding modifications to the wiring of your portable generator.

Petitioner MWE Investments, LLC, et al. Exhibit 1080
Petitioner MWE Investments, LLC, et al. v. Champion Power Equipment, Inc.
IPR2025-01185, Page 19

OPERATION

Do Not Overload Generator

Capacity

Follow these simple steps to calculate the running and starting watts necessary for your purposes.

1. Select the electrical devices you plan on running at the same time.
2. Total the running watts of these items. This is the amount of power you need to keep your items running.
3. Identify the highest starting wattage of all devices identified in step 1. Add this number to the number calculated in step 2. Surge wattage is the extra burst of power needed to start some electric driven equipment. Following the steps listed under "Power Management" will guarantee that only one device will be starting at a time.

Power Management

Use the following formula to convert voltage and amperage to watts:

Volts x Amps = Watts

To prolong the life of your generator and attached devices, follow these steps to add electrical load:

1. Start the generator with no electrical load attached
2. Allow the engine to run for several minutes to stabilize.
3. Plug in and turn on the first item. It is best to attach the item with the largest load first.
4. Allow the engine to stabilize.
5. Plug in and turn on the next item.
6. Allow the engine to stabilize.
7. Repeat steps 5-6 for each additional item.

NOTE

Never exceed the specified capacity when adding loads to the generator.

Operation at High Altitude

The density of air at high altitude is lower than at sea level. Engine power is reduced as the air mass and air-fuel ratio decrease. Engine power and generator output will be reduced approximately 3½% for every 1000 feet of elevation above sea level. This is a natural trend and cannot be changed by adjusting the engine. At high altitudes increased exhaust emissions can also result due to the increased enrichment of the air fuel ratio. Other high altitude issues can include hard starting, increased fuel consumption and spark plug fouling.

To alleviate high altitude issues other than the natural power loss, Champion Power Equipment can provide a high altitude carburetor main jet. The alternative main jet and installation instructions can be obtained by contacting Customer Support. Installation instructions are also available in the Technical Bulletin area of the Champion Power Equipment internet site.

The part number and recommended minimum altitude for the application of the high altitude carburetor main jet is listed in the table below.

In order to select the correct high altitude main jet it is necessary to identify the carburetor model. For this purpose, a code is stamped on the side of the carburetor. Select the correct main jet part number corresponding to the carburetor code found on your particular carburetor.

Carburetor Code	Main Jet	Part Number	Altitude
P28-4-Z	Standard	47.131017.21.Z	5500 Feet (1676 Meters)
	Altitude	47.131017.21.01.Z	
P28-4-H	Standard	47.131017.21.H	
	Altitude	47.131017.21.01.H	
P28-4-Y	Standard	47.131017.21.Y	
	Altitude	47.131017.21.01.Y	

⚠ WARNING

Operation using the alternative main jet at elevations lower than the recommended minimum altitude can damage the engine. For operation at lower elevations, the standard main jet must be used. Operating the engine with the wrong engine configuration at a given altitude may increase its emissions and decrease fuel efficiency and performance.

Petitioner MWE Investments, LLC, et al. Exhibit 1080
Petitioner MWE Investments, LLC, et al. v. Champion Power Equipment, Inc.
IPR2025-01185, Page 20

The owner/operator is responsible for all periodic maintenance.

⚠ WARNING

Never operate a damaged or defective generator.

⚠ WARNING

Tampering with the factory set governor will void your warranty.

⚠ WARNING

Improper maintenance will void your warranty.

NOTE

Maintenance, replacement, or repair of emission control devices and systems may be performed by any non-road engine repair establishment or individual.

Complete all scheduled maintenance in a timely manner. Correct any issue before operating the generator.

NOTE

For service or parts assistance, contact our help line at **1-877-338-0999**

Engine Maintenance

To prevent accidental starting, remove and ground spark plug wire before performing any service.

Oil

Change oil when the engine is warm. Refer to the oil specification to select the proper grade of oil for your operating environment.

1. Remove oil fill cap/dipstick.
2. Use pliers to slide the spring clamp down the oil drain hose and pull the hose off the plug bracket.
3. Point the hose into a drain pan and allow the oil to drain completely. **Note:** The hose end must be lower than the engine base to allow the oil to drain.
4. Replace oil drain hose onto plug bracket and slide spring clamp back into position.
5. Add up to 1.2 qt. (1.1 L) of oil and replace oil fill cap/dipstick. DO NOT OVERFILL.
6. Dispose of used oil at an approved waste management facility.

Oil Cont'd.

NOTE

Once oil has been added, a visual check should show oil about 1-2 threads from running out of the fill hole. If using the dipstick to check oil level, DO NOT screw in the dipstick while checking.

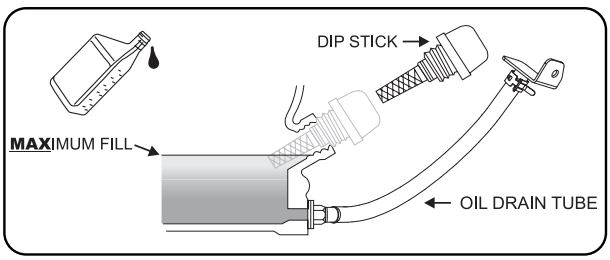

Spark Plugs

1. Remove the spark plug cable from the spark plug.
2. Use the spark plug tool (not included) that shipped with your generator to remove the plug.
3. Inspect the electrode on the plug. It must be clean and not worn to produce the spark required for ignition.
4. Make certain the spark plug gap is 0.7 - 0.8 mm or (0.028 - 0.031 in.).

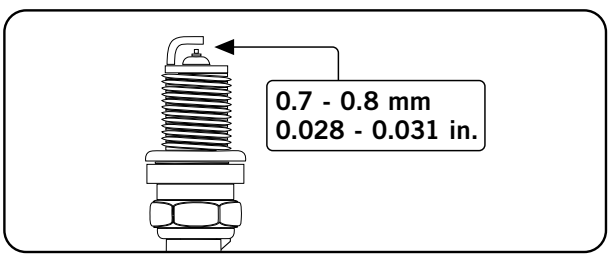

5. Refer to the spark plug recommendation chart when replacing the plug.
6. Carefully thread the plug into the engine.
7. Use the spark plug tool (not included) to firmly install the plug.
8. Attach the spark plug wire to the plug.

Air Filter

1. Remove the snap-on cover holding the air filter to the assembly.
2. Remove the foam element.
3. Wash in liquid detergent and water. Squeeze thoroughly dry in a clean cloth.
4. Saturate in clean engine oil.
5. Squeeze in a clean, absorbent cloth to remove all excess oil.
6. Place the filter in the assembly.
7. Reattach the air filter cover and snap in place.

Petitioner MWE Investments, LLC, et al. Exhibit 1080
Petitioner MWE Investments, LLC, et al. v. Champion Power Equipment, Inc.
IPR2025-01185, Page 21

MAINTENANCE AND STORAGE

Spark Arrester

1. Allow the engine to cool completely before servicing the spark arrester.
2. Remove the three (3) screws holding the cover plate which retains the end of the spark arrester to the muffler.
3. Remove the spark arrester screen.
4. Carefully remove the carbon deposits from the spark arrester screen with a wire brush.
5. Replace the spark arrester if it is damaged.
6. Position the spark arrester in the muffler and attach with the three (3) screws.

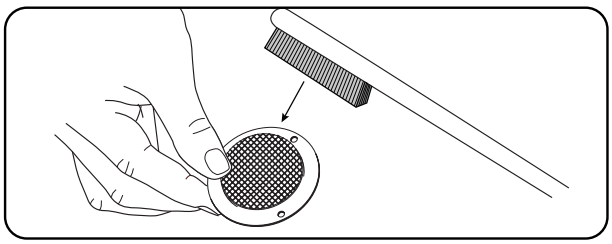

CAUTION

Failure to clean the spark arrester will result in degraded engine performance.

NOTE

Federal and local laws and administrative requirements indicate when and where spark arresters are required. When ordered, spark arresters are required for operation of this generator in National Forest lands. In California, this generator must not be used on any forest- covered land, brush-covered land, or grass- covered land unless the engine is equipped with a spark arrester.

Cleaning

CAUTION

DO NOT spray engine with water.

Water can contaminate the fuel system.

Use a damp cloth to clean exterior surfaces of the engine.
Use a soft bristle brush to remove dirt and oil.
Use an air compressor (25 PSI) to clear dirt and debris from the engine.

Adjustments

The air-fuel mixture is not adjustable. Tampering with the governor can damage your generator and your electrical devices and will void your warranty. CPE recommends that you contact our service line at **1-877-338-0999** for all other service and/or adjustment needs.

Maintenance Schedule

Follow the service intervals indicated in the following maintenance schedule.
Service your generator more frequently when operating in adverse conditions.
Contact our helpline at **1-877-338-0999** to locate the nearest Champion Power Equipment certified service dealer for your generator or engine maintenance needs.

Every 8 hours or daily	
	Check oil level
	Clean around air intake and muffler
	Check hoses for leaks
First 5 hours	
	Change oil
Every 50 hours or every season	
	Clean air filter
	Change oil if operating under heavy load or in hot environments
Every 100 hours or every season	
	Change oil
	Clean/Adjust spark plug
	Check/Adjust valve clearance*
	Clean spark arrester
	Clean fuel tank and filter*
Every 250 hours	
	Clean combustion chamber*
Every 3 years	
	Replace fuel line and LPG hose

*To be performed by knowledgeable, experienced owners or Champion Power Equipment certified dealers.

Generator Maintenance

Make certain that the generator is kept clean and stored properly. Only operate the unit on a flat, level surface in a clean, dry operating environment. DO NOT expose the unit to extreme conditions, excessive dust, dirt, moisture or corrosive vapors.

CAUTION

DO NOT use a garden hose to clean the generator.

Water can enter the generator through the cooling slots and damage the generator windings.

Use a damp cloth to clean exterior surfaces of the generator.
Use a soft bristle brush to remove dirt and oil.
Use an air compressor (25 PSI) to clear dirt and debris from the generator.
Inspect all air vents and cooling slots to ensure that they are clean and unobstructed.

Petitioner MWE Investments, LLC, et al. Exhibit 1080
Petitioner MWE Investments, LLC, et al. v. Champion Power Equipment, Inc.
IPR2025-01185, Page 22

Storage

The generator should be started at least once every 14 days and allowed to run for at least 20 minutes. For longer term storage, please follow these guidelines.

Generator Storage

1. Add a properly formulated fuel stabilizer to the tank.
2. Be sure all appliances are disconnected from the generator.
3. Run the generator for a few minutes so the treated fuel cycles through the fuel system and carburetor.
4. Turn the fuel valve to the "Off" position.
5. Let the generator run until fuel starvation has stopped the engine. This usually takes a few minutes.
6. The generator needs to cool completely before cleaning and storage.
7. Clean the generator according to the maintenance section.
8. Change the oil.
9. Remove the spark plug and pour about 1/2 ounce (14.8 mL) of oil into the cylinder. Crank the engine slowly to distribute the oil and lubricate the cylinder.
10. Reattach the spark plug.
11. Store the unit in a clean, dry place out of direct sunlight.

⚠ DANGER

Generator exhaust contains odorless and colorless carbon monoxide gas.

To avoid accidental or unintended ignition of your remote start generator during periods of storage, the following precautions should be followed:

- When **storing the generator for short periods of time** make sure that the Ignition Switch, the Fuel Valve and the Battery Switch are set in the **OFF** position.
- When **storing the generator for extended periods of time** make sure that the Ignition Switch, the Fuel Valve and the Battery Switch are set in the the **OFF** position and the battery leads have been **disconnected** from the battery.

Generator Battery

This product is equipped with an automatic battery charging circuit. The battery will receive charging voltage when the engine is running. The battery will maintain a proper charge if the unit is used on a regular basis (about once every two weeks). If it is used less frequently, the battery should be connected to a trickle charger (not included) or battery maintainer (not included) to keep the battery properly charged. If the battery is not able to start the engine, it can be started by manually pulling the engine recoil cord. If the battery voltage is extremely low, the charging circuit may not be able to re-charge the battery. In this case, the battery must be connected to a standard automotive style battery charger for re-charging before it can be used.

Disconnect the Battery

1. Remove the protective cover from the black/negative battery lead.
2. Disconnect the black/negative lead from the black/negative terminal on the battery and store the cap screw (M5x10) and nut (M5).
3. Repeat steps 1-2 for the red/positive battery lead.
4. Store the battery in a cool, dry place.

Charge the Battery

For a generator equipped with batteries for electric starting, proper battery maintenance and storage should be followed. An automatic battery charger (not included) with automatic trickle charging capability should be used to charge the battery. Maximum charging rate should not exceed 1.5 amps. Follow the instructions included with the battery charger. The battery should be fully charged at least once per month.

NOTE

A Float Charger will maintain the battery condition over long storage periods.

Petitioner MWE Investments, LLC, et al. Exhibit 1080
Petitioner MWE Investments, LLC, et al. v. Champion Power Equipment, Inc.
IPR2025-01185, Page 23

SPECIFICATIONS

Engine Specifications

- Model . . . . . YF190FD-2-L_G
- Displacement 439cc
- Type . . . . . 4-Stroke OHV
- Start Type . . . . . Electric Start

Generator Specifications

- Model 100153
- Running Wattage (Gasoline) . . . . . 7500 Watts
- Starting Wattage (Gasoline) . . . . . 9375 Watts
- Running Wattage (LPG) . . . . . 6750 Watts
- Starting Wattage (LPG) . . . . . 8400 Watts
- AC Load . . . . . 120/240 V
- Phase . . . . . Single
- Frequency . . . . . 60 Hz
- Fuel Capacity (Gasoline) . . . . . 6 gal. (22.9 L)
- Gross Weight . . . . . 220 lb. (99.8 kg)
- Net Weight . . . . . 203.9 lb. (92.5 kg)
- Height . . . . . 26 in. (66.1 cm)
- Width . . . . . 28.7 in. (72.9 cm)
- Length . . . . . 27.8 in. (70.3 cm)

Fuel

Fuel (Gasoline) capacity is 6 gal. (22.9 L).

- Use regular unleaded gasoline with a minimum octane rating of 87 and an ethanol content of less than 10% by volume.
- Use only an approved LPG cylinder equipped with an OPD valve.

Spark Plugs

OEM spark plug: NHSP F6RTC

Replacement spark plug: NGK BPR6ES or equivalent

Make certain the spark plug gap is 0.7 - 0.8 mm or (0.028 - 0.031 in.).

Maintenance Valve Clearance

- Intake: 0.13 – 0.17 mm (0.005 – 0.007 in.)
- Exhaust: 0.18 – 0.22 mm (0.007 – 0.009 in.)

Note: Tech bulletin regarding the valve adjustment procedure is on www.championpowerequipment.com.

An Important Message About Temperature

Your Champion Power Equipment product is designed and rated for continuous operation at ambient temperatures up to 40°C (104°F). When your product is needed your product may be operated at temperatures ranging from -15°C (5°F) to 50°C (122°F) for short periods. If the product is exposed to temperatures outside this range during storage, it should be brought back within this range before operation. In any event, the product must always be operated outdoors, in a well-ventilated area and away from doors, windows and other vents.

Oil

Use 10W-30 automotive oil.

Oil capacity is up to 1.2 qt. (1.1 L).

DO NOT OVERFILL.

Please reference the following chart for recommended oil types for use in the generator.

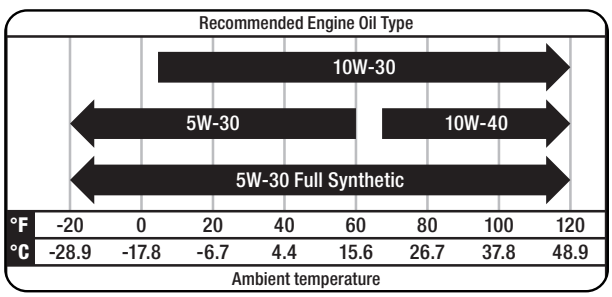

NOTE

Weather will affect engine oil and engine performance. Change the type of engine oil used based on weather conditions to suit the engine needs.

Petitioner MWE Investments, LLC, et al. Exhibit 1080
Petitioner MWE Investments, LLC, et al. v. Champion Power Equipment, Inc.
IPR2025-01185, Page 24

Wiring Diagram

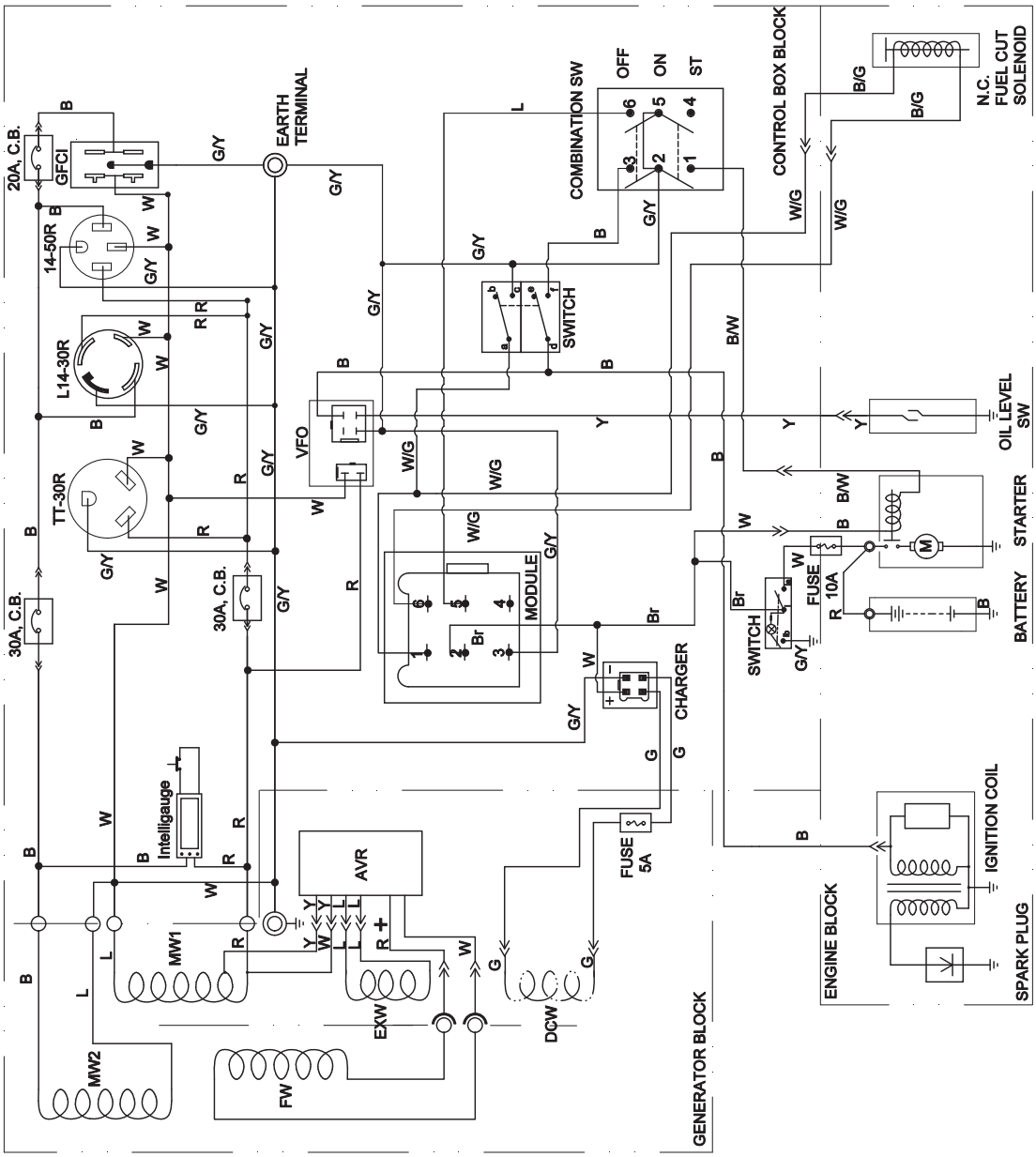

MODULE

1	2	3	4	5	6
Solenoid valve (-)	12VDC (+)	GND	Not use	SWITCH GND	Solenoid valve (+)

SWITCH

	b	a	c	e	d	f
GAS		○	○		○	○
LPG		○		○		

COMBINATION SWITCH

	1	2	3	4	5	6
OFF		○	○		○	○
ON						
ST		○		○		

B	BLACK	Br	BROWN
Y	YELLOW	B/W	BLACK WHITE
L	BLUE	W/G	WHITE GREEN
G	GREEN	G/Y	GREEN YELLOW
R	RED	W/L	WHITE BLUE
W	WHITE	B/G	BLACK GREEN

Petitioner MWE Investments, LLC, et al. Exhibit 1080
Petitioner MWE Investments, LLC, et al. v. Champion Power Equipment, Inc.
IPR2025-01185, Page 25

SPECIFICATIONS

Parts Diagram

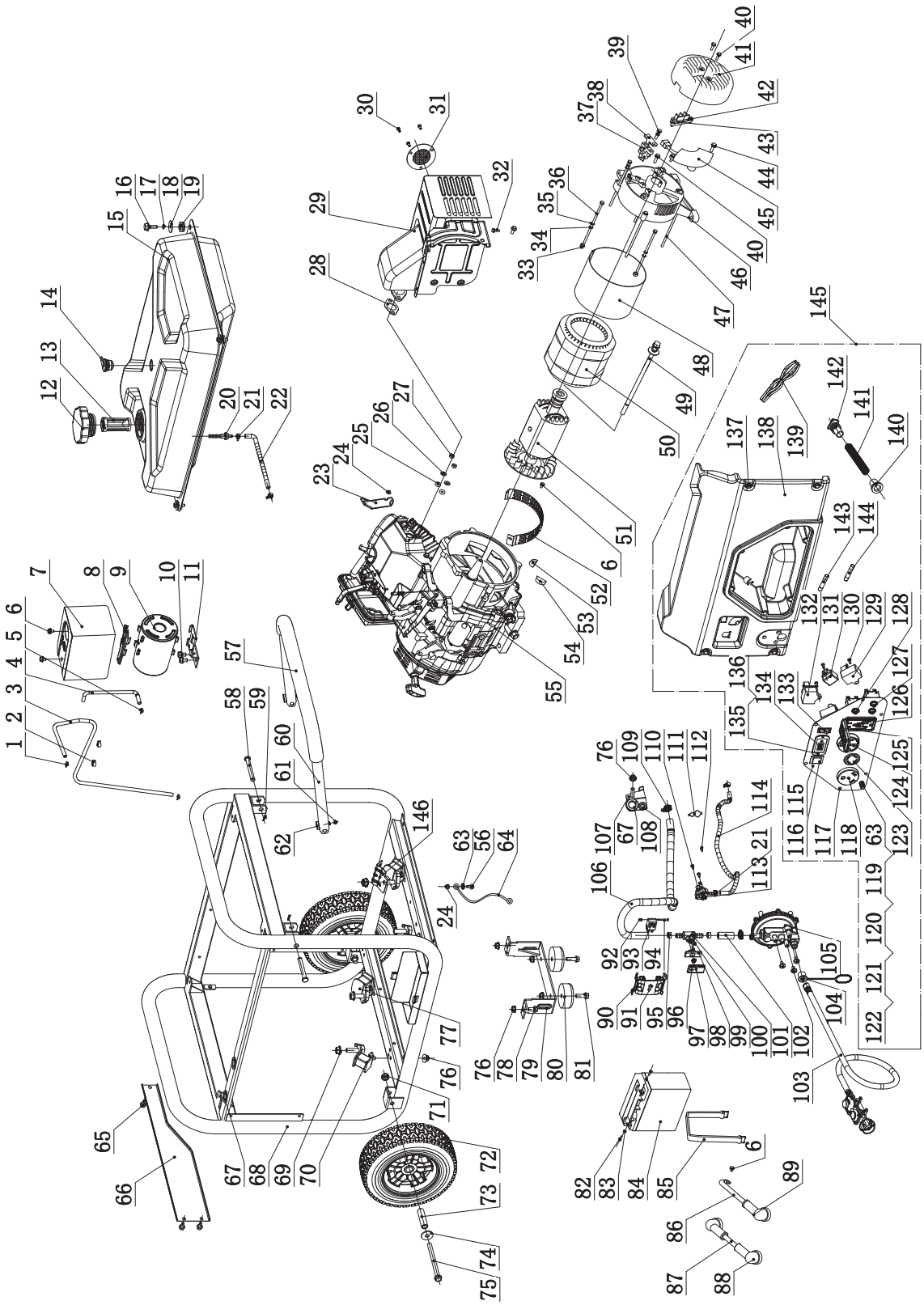

Petitioner MWE Investments, LLC, et al. Exhibit 1080
Petitioner MWE Investments, LLC, et al. v. Champion Power Equipment, Inc.
IPR2025-01185, Page 26

#	Part Number	Description	Qty
1	2.06.006	Clamp Ø7 x Ø1	2
2	2.05.001	Clamp Ø8 x 6.5	2
3	152.070014.05	Pipe, Reversal Valve, 810 mm	1
4	152.070013.03	Pipe, Air Cleaner, 135 mm	1
5	2.06.004	Clamp Ø8 x Ø1	1
6	1.5789.0608	Flange Bolt M6 x 8	4
7	152.070018.02	Board, Heat Insulation	1
8	152.070702.06	Support Arm, Top	1
9	152.070700.02	Carbon Canister, 650 cc	1
10	1.16674.0812	Flange Bolt M8 x 12	2
11	152.070702.05	Support Arm, Bottom	1
12	122.070100.07	Fuel Tank Cap	1
13	122.070300.03	Fuel Filter	1
14	24.070800.00	Reversal Valve	1
15	152.071000.31.48	Fuel Tank, 22.9L, Yellow	1
16	1.5789.0620.1	Flange Bolt M6 x 20, Black	4
17	1.93.06	Lock Washer Ø6	4
18	2.03.004	Flat Washer, Ø24 x Ø6.5 x 1.5	4
19	122.070015.01	Mount Vibration, Fuel Tank	4
20	21.070600.03	Fitting, Fuel Tank	1
21	2.06.016	Clamp Ø8.7 x b8	4
22	152.070011.08	Fuel Pipe, 265 mm	1
23	45.090006.20	Holder, Air Cleaner	1
24	1.6177.1.06	Lock Nut M6, Flange	2
25	1.848.08	Washer Ø8	2
26	1.93.08	Lock Washer Ø8	2
27	1.6175.08	Nut M8	2
28	46.100001.07	Gasket, Exhaust	1
29	46.101000.01.2	Muffler Assembly	1
30	1.9074.4.0510	Screw/Washer Assembly M5 x 10	3
31	46.101300.00	Spark Arrester Assembly	1
32	1.16674.0820	Flange Bolt M8 x 20	2
33	1.6175.05	Nut M5	2
34	1.97.1.05	Washer Ø5	2
35	1.93.05	Lock Washer Ø5	2
36	2.08.071	Bolt M5 x 229	2
37	152.190300.00	Carbon Brush Assembly	1
38	122.190004.01	Pinch, Carbon Brush	1
39	1.9074.15.0520	Bolt/Washer Assembly M5 x 20	1
40	1.16674.0512.2	Flange Bolt M5 x 12	3
41	152.190003.00.48	Generator End Cover, Yellow	1
42	1.9074.17.0516	Screw/Washer Assembly M5 x 16	2
43	122.190400.00	Terminal Block	1
44	1.16674.0516	Flange Bolt M5 x 16	2
45	153.190200.03	AVR	1
46	152.190002.00	End Housing	1
47	2.08.069	Flange Bolt/Washer Assembly M6 x 194	4
48	153.191002.00	Stator Cover	1
49	2.08.070	Flange Bolt/Washer Assembly M10 x 280	1
50	153.191200.18	Stator Assembly, Al, 158 x 190 mm	1
51	153.191100.18	Rotor Assembly, Al, 158 x 190 mm	1
52	152.192300.01	Air Guide	1
53	152.190005.00	Rubber, Fore-Cover, A	1
54	152.190005.01	Rubber, Fore-Cover, B	1
55	47.690	Engine, 439cc	1
56	1.5789.0612	Flange Bolt M6 x 12	1
57	152.200702.02	Cover, Handle	1
58	152.200703.03	Long Pin, Handle	2
59	11.110008.00	"R" Shape	2
60	152.200701.14	Handle, U Style	1
61	1.894.1.08	Circlip Ø8	2
62	152.200703.02	Short Pin, Handle	2
63	1.862.06	Lock Washer Ø6, Toothed	2
64	5.1900.026	Grounding Line 150 mm	1
65	1.5789.0612.1	Flange Bolt M6 x 12, Black	3
66	152.200800.09.2	Decorative Plate	1
67	152.070031.00	Jacket, LPG Hose	3
68	65250.0.10.2	Frame, 700 x 566 x 585	1
69	1.6177.1.10	Lock Nut M10, Flange	4
70	152.201200.03	Motor Mount 1	2
71	1.6182.10	Lock Nut M10	2
72	152.201701.09	9.5 in. PU Wheel	2
73	122.200016.01	Bushing, Ø16 x Ø10.5 x 58.5	2
74	1.96.10	Washer Ø10	2

#	Part Number	Description	Qty
75	1.5782.10120	Bolt M10 x 120	2
76	1.6177.1.08	Lock Nut M8, Flange	9
77	152.201200.04	Motor Mount 2	2
78	1.5789.0816	Flange Bolt M8 x 16	2
79	152.200002.01.2	Support Leg 84 mm	1
80	152.201400.00	Rubber, Support	2
81	1.5789.0825	Flange Bolt M8 x 25	2
82	1.9074.3.0510	Screw/Washer Assembly M5 x 10	2
83	1.6177.1.05	Lock Nut M5, Flange	2
84	9.1000.150	Battery 12V15AH	1
85	152.200904.00	Pinch, Rubber	1
86	5.1900.014	Black Wire, 320 mm, Battery	1
87	5.1900.021	Red Wire, 480 mm, Battery	1
88	152.200013.02.3	Jacket, Wire, Red	2
89	152.200013.02	Jacket, Wire, Black	1
90	152.201004.00	Lock Catch	2
91	152.200019.00.48	Switch Handle, Yellow	1
92	1.6170.03	Nut M3	1
93	5.1050.000	Switch	1
94	1.819.1.0330	Screw M3 x 30	1
95	2.06.032	Clip Ø17	2
96	1.6182.05	Lock Nut M5	1
97	122.070032.00	Sleeve, Knob	1
98	122.070025.02	Knob	1
99	1.823.0408	Screw M4 x 8	2
100	122.074000.01	Cut-off Valve, B	1
101	152.070012.05	Pipe, 40 mm	1
102	2.08.055	Bolt M6 x 14	3
103	47.130021.01	LPG Hose With Regulator 3.3 ft. 1 m	1
104	9.1500.002	Sleeve, Connector	1
105	47.136000.01	Pressure-reducing Valve	1
106	152.070012.06	Pipe, 750 mm	1
107	152.200018.00	Supporter	1
108	152.070031.01	Jacket, Fuel Hose	1
109	2.06.023	Clip Ø20	2
110	1.845.4816	Screw ST4.8 x 16	2
111	2.06.050	Clamp Ø8 x Ø18	1
112	1.845.3513	Screw ST3.5 x 13	1
113	122.070400.06	Fuel Cock	1
114	152.070011.09	Fuel Pipe, 480 mm	1
115	152.199.03.2	Control Panel	1
116	5.1000.001.3	Ignition Switch, Red	1
117	1.9074.4.0512.1	Screw/Washer Assembly M5 x 12, Black	6
118	5.1120.034	Receptacle TT-30R	1
119	1.5783.0622.3	Bolt M6 x 22, Green	1
120	1.6175.06.3	Nut M6, Green	2
121	1.97.1.06.3	Washer Ø6, Green	2
122	1.93.06.3	Lock Washer Ø6, Green	2
123	5.1120.009	Receptacle L14-30R	1
124	5.1120.039	Receptacle 14-50R	1
125	5.1870.022	Receptacle Cover, Receptacle 5-20R, GFCI	1
126	5.1120.050	Receptacle 5-20R, GFCI	1
127	5.1210.930	30Amp Circuit Breaker, Push Button, CSA	2
128	5.1210.920	20Amp Circuit Breaker, Push Button, CSA	1
129	5.1810.003	VFO Diode	1
130	1.823.0514	Screw M5 x 14, Black	3
131	5.1800.004	Rectifier	1
132	5.1820.009	Charger	1
133	5.1000.000.3	Battery Switch, Red	1
134	5.1430.005	Intelligauge	1
135	1.9074.4.0414.1	Screw/Washer Assembly M4 x 14, Black	2
136	1.6177.1.04.1	Flange Lock Nut M4, Black	12
137	1.5789.0615.1	Flange Bolt M6 x 15, Black	4
138	152.210002.17	Control Box	1
139	100153.21.10	Wire Assembly	1
140	122.210003.01	Wire Jacket, Control Box	1
141	5.1330.017	Sheath, Wire	1
142	152.210003.02	Plug, Control Box	1
143	5.1280.003	Fuse, 10A	1
144	5.1280.008	Fuse, 5A	1
145	100153.21	Control Panel Assembly	1
146	152.100007.00	Insulation Board, Motor Mount	1

Petitioner MWE Investments, LLC, et al. Exhibit 1080
Petitioner MWE Investments, LLC, et al. v. Champion Power Equipment, Inc.
IPR2025-01185, Page 27

SPECIFICATIONS

Engine Parts Diagram

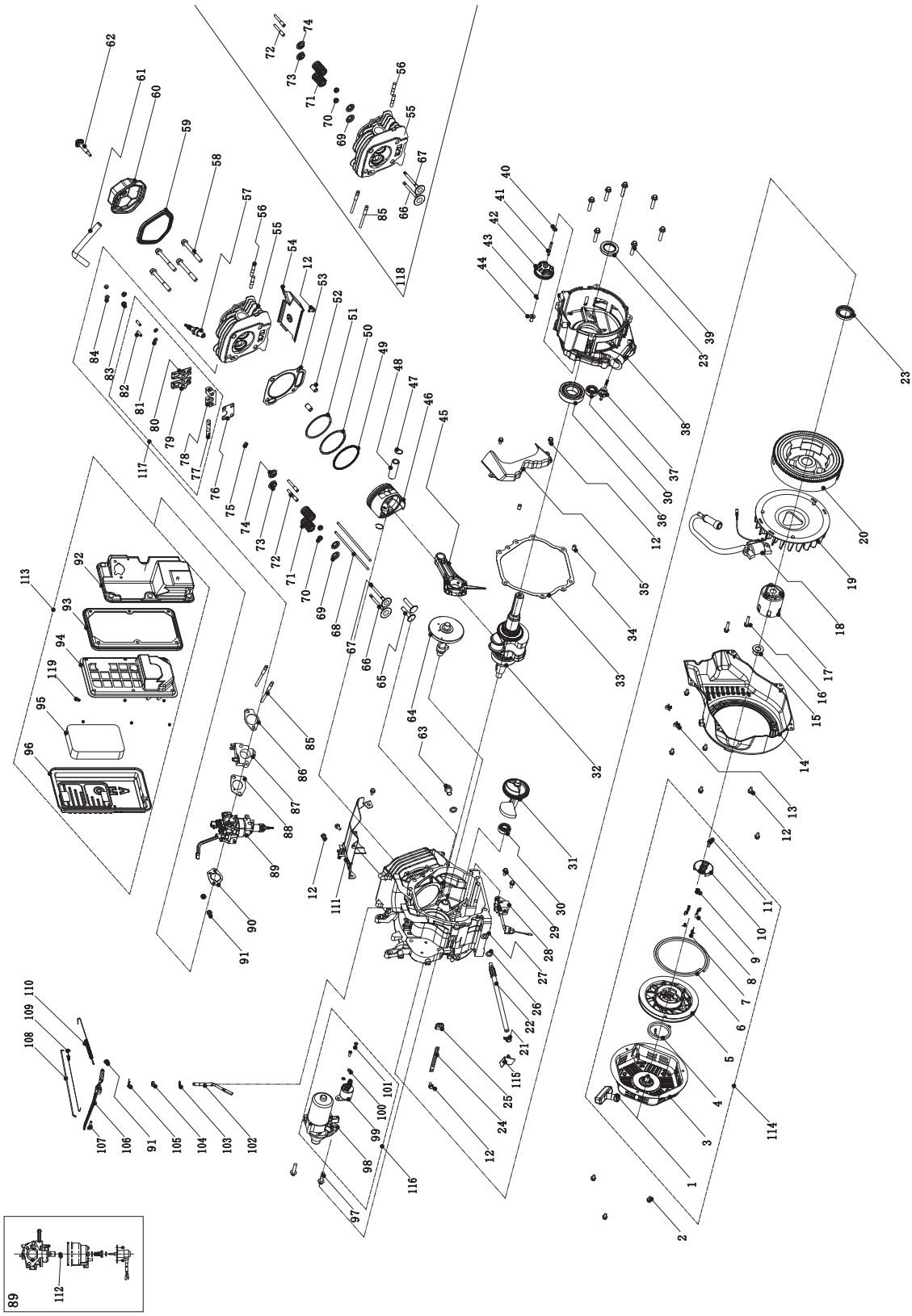

Petitioner MWE Investments, LLC, et al. Exhibit 1080
Petitioner MWE Investments, LLC, et al. v. Champion Power Equipment, Inc.
IPR2025-01185, Page 28

#	Part Number	Description	Qty
1	21.061300.00	Handle, Recoil, Soft	1
2	1.5789.0608	Flange Bolt M6 x 8	3
3	46.061100.00.2	Cover, Recoil Starter, Black	1
4	45.060005.00	Spring, Recoil Starter	1
5	45.061102.00	Reel, Recoil Starter	1
6	2.10.003.1	Rope Ø4 x 1550, Black	1
7	45.060003.00	Spring, Ratchet	2
8	45.060002.00	Starter Ratchet, Steel	2
9	45.060009.00	Spring, Ratchet Guide	1
10	45.060007.00	Ratchet Guide	1
11	45.060008.00	Screw, Ratchet Guide	1
12	1.5789.0612	Flange Bolt M6 x 12	12
13	2.05.009	Clamp Ø12.5 x 7	2
14	47.080100.01.48	Fan Cover, Yellow	1
15	2.02.007	Nut M16 x 1.5	1
16	1.5789.0629	Flange Bolt M6 x 29	2
17	45.060001.00	Pulley, Starter	1
18	46.123000.03	Ignition Coil	1
19	47.080001.00	Cooling Fan	1
20	46.120100.05	Flywheel	1
21	2.06.013	Clamp Ø13.5 x b10	1
22	45.032000.00	Hose, Oil Drain	1
23	2.11.007	Oil Seal Ø35 x Ø52 x 8	2
24	2.05.050	Wire Clip 100 mm	1
25	152.070031.01	Sheath, Wire	1
26	2.03.023	Washer Ø12.5 x Ø20 x 2 , Drain Bolt	2
27	47.030100.05	Crankcase	1
28	45.127000.02	Oil Level Sensor	1
29	1.5789.0615	Flange Bolt M6 x 15	2
30	1.276.6202	Bearing 6202	2
31	47.050006.00	Weight Balancer	1
32	47.050100.01	Crankshaft	1
33	46.030008.00	Gasket, Crankcase Cover	1
34	2.04.001	Dowel Pin Ø9 x 14	2
35	46.080600.00	Air Guide, Right Side	1
36	1.276.6207	Bearing 6207	1
37	46.031000.01.48	Oil Dipstick Assembly, Yellow	1
38	45.030007.00	Cover, Crankcase	1
39	1.5789.0840	Flange Bolt M8 x 40	7
40	2.03.021.1	Washer Ø6.4 x Ø13 x 1, Black	1
41	45.110013.00	Shaft, Governor Gear	1
42	45.110100.00	Gear, Governor	1
43	21.110011.00	Clip, Governor Gear	1
44	45.110012.00	Bushing, Govornor Gear, Steel	1
45	47.050200.00	Connecting Rod	1
46	47.050005.01	Piston	1
47	2.09.004	Circlip Ø21 x Ø1	2
48	45.050003.00	Pin, Piston	1
49	46.050303.02	Ring, Oil	1
50	46.050302.02	Ring, Second Piston	1
51	46.050301.02	Ring, First Piston	1
52	2.04.004	Dowel Pin Ø12 x 20	2
53	46.030009.02	Gasket, Cylinder Head	1
54	46.080400.00	Air Guide, Lower	1
55	47.010100.01	Cylinder Head	1
56	2.01.010	Stud Bolt M8 x 35	2
57	2.15.002(F6RTC)	Spark Plug F6RTC	1
58	2.08.014	Flange Bolt M10 x 80	4
59	46.020002.00	Gasket, Cylinder Head Cover	1
60	47.021000.00	Cover, Cylinder Head	1

#	Part Number	Description	Qty
61	45.020001.02	Breather Tube	1
62	47.020100.00	Bolt, Cylinder Head Cover	1
63	2.08.039	Drain Bolt M12 x 1.5 x 15	1
64	47.041000.01	Camshaft	1
65	47.040004.00	Lifter, Valve	2
66	47.040002.00	Valve, Intake	1
67	47.040006.00	Valve, Exhaust	1
68	46.040005.00	Push Rod	2
69	45.040015.00	Retainer, Valve Spring	2
70	45.040017.00	Oil Seal, Valve	2
71	45.040003.00	Spring, Valve	2
72	23.040010.00	Bolt, Rocker Arm	2
73	45.040001.00	Retainer, Intake Valve Spring	1
74	45.040007.00	Retainer, Exhaust Valve Spring	1
75	45.040008.00	Rotator, Exhaust Valve	1
76	46.040004.00	Guide Plate, Push Rod	1
77	46.040016.00	Shaft, Rocker Arm	1
78	46.040201.00	Retainer, Rocker Arm	1
79	46.040009.00	Rocker Arm, Intake Valve	1
80	46.040018.00	Rocker Arm, Exhaust Valve	1
81	1.97.1.06	Washer Ø6	2
82	22.040012.00	Screw, Valve Adjustment	2
83	1.6177.1.06	Flange Nut M6	2
84	21.040021.00	Nut M6 x 0.5, Lock	2
85	2.01.008	Stud Bolt M6 x M8 x 105	2
86	46.130002.20	Gasket, Insulator	1
87	45.130001.00	Insulator, Carburetor	1
88	46.130003.20	Gasket, Carburetor	1
89	47.131000.25	Carburetor	1
	47.131000.29		
90	46.130004.20	Gasket, Air Cleaner	1
91	1.6177.06	Flange Nut M6	3
92	46.091100.03	Base, Air Cleaner	1
93	45.091002.20	Seal, Air Cleaner	1
94	45.091001.20	Separator, Air Cleaner	1
95	45.091003.20	Element, Air Cleaner	1
96	46.091200.04	Cover, Air Cleaner	1
97	1.5789.0835	Flange Bolt M8 x 35	2
98	45.125100.00	Starter Motor	1
99	45.125200.01	Relay, Starter	1
100	1.93.05	Lock Washer Ø5	2
101	1.16674.0516	Flange Bolt M5 x 16	2
102	45.110001.00	Shaft, Governor Arm	1
103	2.03.019	Washer Ø8.2 x Ø17 x 0.8	1
104	2.11.006	Oil Seal Ø7 x Ø14 x 5	1
105	45.110008.00	Pin, Shaft	1
106	45.110003.01	Arm, Governor	1
107	2.08.040	Bolt M6x21, Governor Arm	1
108	45.110006.00	Rod, Governor	1
109	45.110005.00	Spring, Throttle Return	1
110	45.110007.01	Spring, Governor	1
111	46.080300.20	Air Guide, Upper	1
112	47.131017.21	Main Jet, Standard	1
	47.131017.21.01	Main Jet, Altitude	/
113	46.091000.03.2	Air Cleaner Assembly	1
114	46.061000.00	Recoil Assembly	1
115	45.030200.00	Support	1
116	45.125000.01	Starter Motor Assembly	1
117	46.040200.00	Rocker Arm Assembly	1
118	47.010000.01	Cylinder Head Assembly	1
119	1.6177.1	Flange Nut M5	6

Petitioner MWE Investments, LLC, et al. Exhibit 1080
Petitioner MWE Investments, LLC, et al. v. Champion Power Equipment, Inc.
IPR2025-01185, Page 29

TROUBLESHOOTING

Problem	Cause	Solution
Generator will not start	No fuel	Add fuel
	Faulty spark plug	Replace spark plug
	Unit loaded during start up	Remove load from unit
Generator will not start; Generator starts but runs roughly	Low oil level	Fill crankcase to the proper level
		Place generator on a flat, level surface
	Choke in the wrong position	Adjust choke
	Spark plug wire loose	Attach wire to spark plug
Generator will not start electrically	Generator battery is dead	Recharge generator battery
	Battery switch is in the “OFF” position	Turn battery switch to “ON” position
Generator shuts down during operation	Out of fuel	Fill the gasoline tank or fill LPG cylinder
	Low oil level	Fill crankcase to the proper level. Place generator on a flat, level surface
Generator cannot supply enough power or overheating	Generator is overloaded	Review load and adjust. See “Power Management”
	Insufficient ventilation	Check for air restriction. Move to a well ventilated area
No AC output	Cable not properly connected	Check all connections
	Connected device is defective	Replace defective device
	Circuit breaker is open	Reset circuit breaker
	Faulty brush assembly	Replace brush assembly (Service Center)
	Faulty AVR (auto voltage regulator)	Replace AVR (Service Center)
	Loose wiring	Inspect and tighten wiring connections
	Other	Contact the help line
Repeated circuit breaker tripping	Overload	Review load and adjust. See “Power Management”
	Faulty cords or device	Check for damaged, bare or frayed wires. Replace defective device

For further technical support:

Technical Service
Mon – Fri 8:30 AM – 5:00 PM (PST/PDT)
Toll Free: 1-877-338-0999
tech@championpowerequipment.com

Petitioner MWE Investments, LLC, et al. Exhibit 1080
Petitioner MWE Investments, LLC, et al. v. Champion Power Equipment, Inc.
IPR2025-01185, Page 30

WARRANTY*

CHAMPION POWER EQUIPMENT
3 YEAR LIMITED WARRANTY

Warranty Qualifications

To register your product for warranty and FREE lifetime call center technical support please visit:
https://www.championpowerequipment.com/register

To complete registration you will need to include a copy of the purchase receipt as proof of original purchase. Proof of purchase is required for warranty service. Please register within ten (10) days from date of purchase.

Repair/Replacement Warranty

CPE warrants to the original purchaser that the mechanical and electrical components will be free of defects in material and workmanship for a period of three years (parts and labor) from the original date of purchase and 270 days (parts and labor) for commercial and industrial use. Transportation charges on product submitted for repair or replacement under this warranty are the sole responsibility of the purchaser. This warranty only applies to the original purchaser and is not transferable.

Do Not Return The Unit To The Place Of Purchase

Contact CPE's Technical Service and CPE will troubleshoot any issue via phone or e-mail. If the problem is not corrected by this method, CPE will, at its option, authorize evaluation, repair or replacement of the defective part or component at a CPE Service Center. CPE will provide you with a case number for warranty service. Please keep it for future reference. Repairs or replacements without prior authorization, or at an unauthorized repair facility, will not be covered by this warranty.

Warranty Exclusions

This warranty does not cover the following repairs and equipment:

Normal Wear

Products with mechanical and electrical components need periodic parts and service to perform well. This warranty does not cover repair when normal use has exhausted the life of a part or the equipment as a whole.

Installation, Use and Maintenance

This warranty will not apply to parts and/or labor if the product is deemed to have been misused, neglected, involved in an accident, abused, loaded beyond the product's limits, modified, installed improperly or connected incorrectly to any electrical component. Normal maintenance is not covered by this warranty and is not required to be performed at a facility or by a person authorized by CPE.

Other Exclusions

This warranty excludes:

- Cosmetic defects such as paint, decals, etc.
- Wear items such as filter elements, o-rings, etc.
- Accessory parts such as starting batteries, and storage covers.
- Failures due to acts of God and other force majeure events beyond the manufacturer's control.
- Problems caused by parts that are not original Champion Power Equipment parts.

When applicable, this warranty does not apply to products used for prime power in place of a utility.

Limits of Implied Warranty and Consequential Damage

Champion Power Equipment disclaims any obligation to cover any loss of time, use of this product, freight, or any incidental or consequential claim by anyone from using this product.
THIS WARRANTY AND THE ATTACHED U.S. EPA and/or CARB EMISSION CONTROL SYSTEM WARRANTIES (WHEN APPLICABLE) ARE IN LIEU OF ALL OTHER WARRANTIES, EXPRESS OR IMPLIED, INCLUDING WARRANTIES OF MERCHANTABILITY OR FITNESS FOR A PARTICULAR PURPOSE.

A unit provided as an exchange will be subject to the warranty of the original unit. The length of the warranty governing the exchanged unit will remain calculated by reference to the purchase date of the original unit.

This warranty gives you certain legal rights which may change from state to state or province to province. Your state or province may also have other rights you may be entitled to that are not listed within this warranty.

Contact Information

Address

Champion Power Equipment, Inc.
12039 Smith Ave.
Santa Fe Springs, CA 90670 USA
www.championpowerequipment.com

Customer Service

Toll Free: 1-877-338-0999
info@championpowerequipment.com
Fax no.: 1-562-236-9429

Technical Service

Toll Free: 1-877-338-0999
tech@championpowerequipment.com
❗ EMERGENCY 24 HOUR SUPPORT: 1-562-204-1188

*Except as otherwise stipulated in any of the following enclosed Emission Control System Warranties (when applicable) for the Emission Control System: U.S. Environment Protection Agency (EPA) and/or California Air Resources Board (CARB).

CHAMPION POWER EQUIPMENT, INC. (CPE), THE UNITED STATES ENVIRONMENT PROTECTION AGENCY (U.S. EPA) AND THE CALIFORNIA AIR RESOURCES BOARD (CARB) EMISSION CONTROL SYSTEM WARRANTY

Your Champion Power Equipment (CPE) engine complies with both the U.S. EPA and state of California Air Resources Board (CARB) Exhaust and Evaporative emissions regulations.

YOUR WARRANTY RIGHTS AND OBLIGATIONS:

The US EPA, California Air Resources Board, and CPE are pleased to explain the Federal and California Exhaust and Evaporative Emission Control Systems Warranty on your 2021 small off-road engine (SORE) and engine powered equipment. In California, new equipment that use small off-road engines (SORE) must be designed, built and equipped to meet the State's stringent anti smog standards. In the other states, new engines and equipment must be designed, built and equipped, at the time of sale, to meet U.S. EPA regulations for small off-road engines (SORE). CPE must warrant the exhaust and evaporative emission control system on your small off-road engine (SORE) for the period listed below, provided there has been no abuse, neglect, unapproved modification, or improper maintenance of your equipment leading to the failure of the exhaust and evaporative emission control systems.

Your evaporative emission control system may include parts such as: carburetors, fuel tanks, fuel lines, (for liquid fuel and fuel vapors), fuel caps, valves, canisters, filters, clamps, connectors, and other associated components. Also included for your exhaust emission control system may be fuel-injection system, the ignition system, catalytic converter and other exhaust emission related assemblies. Where a warrantable condition exits, CPE will repair your small off-road engine (SORE) at no cost to you including diagnosis, parts and labor.

MANUFACTURER'S WARRANTY COVERAGE:

This exhaust and evaporative emission control system is warranted for two years. If any exhaust and evaporative, emission related part on your engine or equipment is defective in, the part will be repaired or replaced by CPE.

OWNER WARRANTY RESPONSIBILITIES:

As the small off-road engine (SORE) owner, you are responsible for the performance of the required maintenance listed in your Owner's Manual. CPE recommends that you retain all your receipts covering maintenance on your small off-road engine (SORE), but CPE cannot deny warranty coverage solely for the lack of receipts.

As the small off-road engine (SORE) owner, you should be aware that CPE may deny you warranty coverage if your small, off-road engine (SORE) or a part has failed due to abuse, neglect, improper maintenance or unapproved modifications.

You are responsible for presenting your small off-road engine to an Authorized CPE distribution center, service center or alternative service outlet as described in (3)(f.) below or CPE dealer or CPE, Santa Fe Springs, Ca. as soon as the problem exists. The warranty repairs shall be completed in a reasonable amount of time, not to exceed 30 days.

If you have any questions regarding your warranty coverage, you should contact:

Champion Power Equipment, Inc.
Customer Service
12039 Smith Ave.
Santa Fe Springs, CA 90670
1-877-338-0999
tech@championpowerequipment.com

EXHAUST AND EVAPORATIVE EMISSION CONTROL SYSTEM WARRANTY

The following are specific provisions relative to your Exhaust and Evaporative Emission Control System (ECS) Warranty Coverage.

1. **APPLICABILITY:** This warranty shall apply to 1995 and later model year California small off-road engines (SORE) (for other states, 1997 and later model year engines). The ECS Warranty Period shall begin on the date the new engine or equipment is delivered to its original, end-use purchaser, and shall continue for 24 consecutive months thereafter.

2. **GENERAL EMISSIONS WARRANTY COVERAGE**
   CPE warrants to the original, end-use purchaser of the new engine or equipment and to each subsequent purchaser that each of its small off-road engines (SORE) is:

   2a. Designed, built and equipped to conform to U.S. EPA emissions standards for spark-ignited engines at or below 19 kilowatts and all applicable regulations adopted by the California Air Resources Board, and

   2b. Free from defects in materials and workmanship that cause the failure of a warranted part to be identical in all material respects to the part as described in the engine manufacturer's application for certification for a period of two years.

3. **THE WARRANTY ON EXHAUST AND EVAPORATIVE EMISSION-RELATED PARTS WILL BE INTERPRETED AS FOLLOWS:**

   3a. Any warranted part that is not scheduled for replacement as required maintenance in the Owners Manual shall be warranted for the ECS Warranty Period. If any such part fails during the ECS Warranty Period, it shall be repaired or replaced by CPE according to Subsection "d" below. Any such part repaired or replaced under the ECS Warranty shall be warranted for any remainder of the ECS Warranty Period.

   3b. Any warranted, exhaust and evaporative emissions-related part which is scheduled only for regular inspection as specified in the Owners Manual shall be warranted for the ECS Warranty Period. A statement in such written instructions to the effect of "repair or replace as necessary", shall not reduce the ECS Warranty Period. Any such part repaired or replaced under the ECS Warranty shall be warranted for the remainder of the ECS Warranty Period.

   3c. Any warranted, exhaust and evaporative emissions-related part which is scheduled for replacement as required maintenance in the Owner's Manual shall be warranted for the period of time prior to the first scheduled replacement point for that part. If the part fails prior to the first scheduled replacement, the part shall be repaired or replaced by CPE according to Subsection "d" below. Any such exhaust and evaporative emissions-related part repaired or replaced under the ECS Warranty, shall be warranted for the remainder of the ECS Warranty Period prior to the first scheduled replacement point for such emissions-related part.

   3d. Repair or replacement of any warranted, exhaust and evaporative emissions-related part under this ECS Warranty shall be performed at no charge to the owner at a CPE Authorized Service Outlet.

   3e. The owner shall not be charged for diagnostic labor which leads to the determination that a part covered by the ECS Warranty is in fact defective, provided that such diagnostic work is performed at a CPE Authorized Service Outlet.

   3f. CPE shall pay for covered exhaust and evaporative emissions warranty repairs at non-authorized service outlets under the following circumstances:

      i. The service is required in a population center with a population over 100,000 according to U.S. Census 2000 without a CPE Authorized Service Outlet AND

      ii. The service is required more than 100 miles from a CPE Authorized Service Outlet. The 100 mile limitation does not apply in the following states: Alaska, Arizona, Colorado, Hawaii, Idaho, Montana, Nebraska, Nevada, New Mexico, Oregon, Texas, Utah and Wyoming.

   3g. CPE shall be liable for damages to other original engine components or approved modifications proximately caused by a failure under warranty of an emission-related part covered by the ECS Warranty.

   3h. Throughout the ECS Warranty Period, CPE shall maintain a supply of warranted exhaust and evaporative emission-related parts sufficient to meet the expected demand for such exhaust and evaporative emission-related parts.

   3i. Any CPE Authorized and approved exhaust and evaporative emission-related replacement part may be used in the performance of any ECS Warranty maintenance or repair and will be provided without charge to the owner. Such use shall not reduce CPE's warranty obligation.

   3j. Unapproved add-on or modified parts may not be used to modify or repair a CPE engine. Such use voids this ECS Warranty and shall be sufficient grounds for disallowing an ECS Warranty claim. CPE shall not be liable hereunder for failures of any warranted parts of a CPE engine caused by the use of such an unapproved add-on or modified part.

EMISSION-RELATED PARTS INCLUDE THE FOLLOWING: (using those portions of the list applicable to the engine)

Systems covered by this warranty	Parts Description
Fuel Metering System	Fuel regulator, Carburetor and internal parts
Air Induction System	Air cleaner, Intake manifold
Ignition System	Spark plug and parts, Magneto ignition system
Exhaust System	Exhaust manifold, catalytic converter
Miscellaneous Parts	Tubing, Fittings, Seals, Gaskets, and Clamps associated with these listed systems.
Evaporative Emissions	Fuel Tank, Fuel Cap, Fuel Lines (for liquid fuel and fuel vapors), Fuel Line Fittings, Clamps, Pressure Relief Valves, Control Valves, Control Solenoids, Electronic Controls, Vacuum Control Diaphragms, Control Cables, Control Linkages, Purge Valves, Gaskets, Liquid/Vapor Separator, Carbon Canister, Canister Mounting Brackets, Carburetor Purge Port Connector

TO OBTAIN WARRANTY SERVICE:

You must take your CPE engine or the product on which it is installed, along with your warranty registration card or other proof of original purchase date, at your expense, to any Champion Power Equipment dealer who is authorized by Champion Power Equipment, Inc. to sell and service that CPE product during his normal business hours. Alternate service locations defined in Section (3)(f.) above must be approved by CPE prior to service. Claims for repair or adjustment found to be caused solely by defects in material or workmanship will not be denied because the engine was not properly maintained and used.

If you have any questions regarding your warranty rights and responsibilities, or to obtain warranty service, please write or call Customer Service at Champion Power Equipment, Inc.

Champion Power Equipment, Inc.
12039 Smith Ave.
Santa Fe Springs, CA 90670
1-877-338-0999
Attn.: Customer Service
tech@championpowerequipment.com