3GPP TS 38.300 V15.5.0 (2019-03)

Technical Specification

3rd Generation Partnership Project;
Technical Specification Group Radio Access Network;
NR; NR and NG-RAN Overall Description;
Stage 2
(Release 15)

The present document has been developed within the 3rd Generation Partnership Project (3GPP TM) and may be further elaborated for the purposes of 3GPP.
The present document has not been subject to any approval process by the 3GPP Organizational Partners and shall not be implemented.
This Specification is provided for future development work within 3GPP only. The Organizational Partners accept no liability for any use of this Specification.
Specifications and Reports for implementation of the 3GPP TM system should be obtained via the 3GPP Organizational Partners' Publications Offices.

3GPP

Postal address

3GPP support office address
650 Route des Lucioles - Sophia Antipolis
Valbonne - FRANCE
Tel.: +33 4 92 94 42 00 Fax: +33 4 93 65 47 16

Internet
http://www.3gpp.org

Copyright Notification

No part may be reproduced except as authorized by written permission.
The copyright and the foregoing restriction extend to reproduction in all media.

© 2019, 3GPP Organizational Partners (ARIB, ATIS, CCSA, ETSI, TSDSI, TTA, TTC).
All rights reserved.

UMTS™ is a Trade Mark of ETSI registered for the benefit of its members
3GPP™ is a Trade Mark of ETSI registered for the benefit of its Members and of the 3GPP Organizational Partners
LTE™ is a Trade Mark of ETSI registered for the benefit of its Members and of the 3GPP Organizational Partners
GSM® and the GSM logo are registered and owned by the GSM Association

Samsung Exhibit 1011, Page 2 of 97

Contents

Foreword 7
1 Scope 8
2 References 8
3 Abbreviations and Definitions 9
3.1 Abbreviations 9
3.2 Definitions 11
4 Overall Architecture and Functional Split 11
4.1 Overall Architecture 11
4.2 Functional Split 12
4.3 Network Interfaces 14
4.3.1 NG Interface 14
4.3.1.1 NG User Plane 14
4.3.1.2 NG Control Plane 14
4.3.2 Xn Interface 15
4.3.2.1 Xn User Plane 15
4.3.2.2 Xn Control Plane 16
4.4 Radio Protocol Architecture 16
4.4.1 User Plane 16
4.4.2 Control Plane 17
4.5 Multi-Radio Dual Connectivity 17
5 Physical Layer 17
5.1 Waveform, numerology and frame structure 17
5.2 Downlink 18
5.2.1 Downlink transmission scheme 18
5.2.2 Physical-layer processing for physical downlink shared channel 18
5.2.3 Physical downlink control channels 19
5.2.4 Synchronization signal and PBCH block 20
5.2.5 Physical layer procedures 20
5.2.5.1 Link adaptation 20
5.2.5.2 Power Control 21
5.2.5.3 Cell search 21
5.2.5.4 HARQ 21
5.2.5.5 Reception of SIB1 21
5.3 Uplink 21
5.3.1 Uplink transmission scheme 21
5.3.2 Physical-layer processing for physical uplink shared channel 22
5.3.3 Physical uplink control channel 22
5.3.4 Random access 23
5.3.5 Physical layer procedures 23
5.3.5.1 Link adaptation 23
5.3.5.2 Uplink Power control 23
5.3.5.3 Uplink timing control 23
5.3.5.4 HARQ 24
5.4 Carrier aggregation 24
5.4.1 Carrier aggregation 24
5.4.2 Supplementary Uplink 24
5.5 Transport Channels 24
6 Layer 2 25
6.1 Overview 25
6.2 MAC Sublayer 27
6.2.1 Services and Functions 27
6.2.2 Logical Channels 27
6.2.3 Mapping to Transport Channels 27
6.2.4 HARQ 28

Samsung Exhibit 1011, Page 3 of 97

6.3 RLC Sublayer 28
6.3.1 Transmission Modes 28
6.3.2 Services and Functions 28
6.3.3 ARQ 28
6.4 PDCP Sublayer 29
6.4.1 Services and Functions 29
6.5 SDAP Sublayer 29
6.6 L2 Data Flow 29
6.7 Carrier Aggregation 30
6.8 Dual Connectivity 31
6.9 Supplementary Uplink 31
6.10 Bandwidth Adaptation 31

7 RRC 32
7.1 Services and Functions 32
7.2 Protocol States 33
7.3 System Information Handling 33
7.3.1 Overview 33
7.3.2 Scheduling 35
7.3.3 SI Modification 35
7.4 Access Control 35
7.5 UE Capability Retrieval framework 35
7.6 Transport of NAS Messages 36
7.7 Carrier Aggregation 36
7.8 Bandwidth Adaptation 36
7.9 UE Assistance Information 36

8 NG Identities 36
8.1 UE Identities 36
8.2 Network Identities 37

9 Mobility and State Transitions 37
9.1 Overview 37
9.2 Intra-NR 38
9.2.1 Mobility in RRC_IDLE 38
9.2.1.1 Cell Selection 38
9.2.1.2 Cell Reselection 39
9.2.1.3 State Transitions 39
9.2.2 Mobility in RRC_INACTIVE 41
9.2.2.1 Overview 41
9.2.2.2 Cell Reselection 42
9.2.2.3 RAN-Based Notification Area 42
9.2.2.4 State Transitions 42
9.2.2.4.1 UE triggered transition from RRC_INACTIVE to RRC_CONNECTED 42
9.2.2.4.2 Network triggered transition from RRC_INACTIVE to RRC_CONNECTED 44
9.2.2.5 RNA update 45
9.2.3 Mobility in RRC_CONNECTED 47
9.2.3.1 Overview 47
9.2.3.2 Handover 48
9.2.3.2.1 C-Plane Handling 48
9.2.3.2.2 U-Plane Handling 50
9.2.3.2.3 Data Forwarding 52
9.2.3.3 Re-establishment procedure 53
9.2.4 Measurements 53
9.2.5 Paging 56
9.2.6 Random Access Procedure 56
9.2.7 Radio Link Failure 57
9.2.8 Beam failure detection and recovery 58
9.3 Inter RAT 58
9.3.1 Intra 5GC 58
9.3.1.1 Cell Reselection 58
9.3.1.2 Handover 58
9.3.1.3 Measurements 59

Samsung Exhibit 1011, Page 4 of 97

9.3.2 From 5GC to EPC 59
9.3.2.1 Cell Reselection 59
9.3.2.2 Handover and redirection 59
9.3.2.3 Measurements 59
9.3.2.4 Data Forwarding for the Control Plane 59
9.3.2.5 Data Forwarding for the User Plane 60
9.3.3 From EPC to 5GC 60
9.3.3.1 Data Forwarding for the Control Plane 60
9.3.3.2 Data Forwarding for the User Plane 60
9.4 Roaming and Access Restrictions 61

10 Scheduling 61
10.1 Basic Scheduler Operation 61
10.2 Downlink Scheduling 61
10.3 Uplink Scheduling 62
10.4 Measurements to Support Scheduler Operation 62
10.5 Rate Control 63
10.5.1 Downlink 63
10.5.2 Uplink 63
10.6 Activation/Deactivation Mechanism 63
10.7 E-UTRA-NR Cell Resource Coordination 64

11 UE Power Saving 64

12 QoS 65
12.1 Overview 65
12.2 Explicit Congestion Notification 67

13 Security 67
13.1 Overview and Principles 67
13.2 Security Termination Points 69
13.3 State Transitions and Mobility 70

14 UE Capabilities 70

15 Self-Configuration and Self-Optimisation 70
15.1 Definitions 70
15.2 Void 70
15.3 Self-configuration 70
15.3.1 Dynamic configuration of the NG-C interface 70
15.3.1.1 Prerequisites 70
15.3.1.2 SCTP initialization 71
15.3.1.3 Application layer initialization 71
15.3.2 Dynamic Configuration of the Xn interface 71
15.3.2.1 Prerequisites 71
15.3.2.2 SCTP initialization 71
15.3.2.3 Application layer initialization 71
15.3.3 Automatic Neighbour Cell Relation Function 72
15.3.3.1 General 72
15.3.3.2 Intra-system Automatic Neighbour Cell Relation Function 72
15.3.3.3 Void 73
15.3.3.4 Void 73
15.3.3.5 Inter-system Automatic Neighbour Cell Relation Function 73
15.3.4 Xn-C TNL address discovery 74
15.4 Support for Energy Saving 75
15.4.1 General 75
15.4.2 Solution description 75
15.4.3 O&M requirements 75

16 Verticals Support 76
16.1 URLLC 76
16.1.1 Overview 76
16.1.2 LCP Restrictions 76
16.1.3 Packet Duplication 76

Samsung Exhibit 1011, Page 5 of 97

16.2 IMS Voice 77
16.2.0 Support for IMS voice 77
16.2.1 Support for MMTEL IMS voice and video enhancements 77
16.2.1.1 RAN-assisted codec adaptation 77
16.2.1.2 MMTEL voice quality/coverage enhancements 78
16.3 Network Slicing 78
16.3.1 General Principles and Requirements 78
16.3.2 AMF and NW Slice Selection 80
16.3.2.1 CN-RAN interaction and internal RAN aspects 80
16.3.2.2 Radio Interface Aspects 80
16.3.3 Resource Isolation and Management 80
16.3.4 Signalling Aspects 80
16.3.4.1 General 80
16.3.4.2 AMF and NW Slice Selection 80
16.3.4.3 UE Context Handling 81
16.3.4.4 PDU Session Setup Handling 81
16.3.4.5 Mobility 82
16.4 Public Warning System 83
16.5 Emergency Services 83
16.5.1 Overview 83
16.5.2 IMS Emergency call 83
16.5.3 eCall over IMS 84
16.5.4 Fallback 84

Annex A (informative): QoS Handling in RAN 85

A.1 PDU Session Establishment 85

A.2 New QoS Flow with RQoS 85

A.3 New QoS Flow with Explicit RRC Signalling 86

A.4 New QoS Flow with Explicit NAS Signalling 87

A.5 Release of QoS Flow with Explicit Signalling 88

A.6 UE Initiated UL QoS Flow 88

Annex B (informative): Deployment Scenarios 90

B.1 Supplementary Uplink 90

B.2 Multiple SSBs in a carrier 90

Annex C (informative): I-RNTI Reference Profiles 92

Annex D (informative): SPID ranges and mapping of SPID values to cell reselection and inter-RAT/inter frequency handover priorities 93

Annex E (informative): Change history 94

Samsung Exhibit 1011, Page 6 of 97

Foreword

This Technical Specification has been produced by the 3rd Generation Partnership Project (3GPP).

The contents of the present document are subject to continuing work within the TSG and may change following formal TSG approval. Should the TSG modify the contents of the present document, it will be re-released by the TSG with an identifying change of release date and an increase in version number as follows:

Version x.y.z

where:

x the first digit:

1 presented to TSG for information;

2 presented to TSG for approval;

3 or greater indicates TSG approved document under change control.

y the second digit is incremented for all changes of substance, i.e. technical enhancements, corrections, updates, etc.

z the third digit is incremented when editorial only changes have been incorporated in the document.

Samsung Exhibit 1011, Page 7 of 97

1 Scope

The present document provides an overview and overall description of the NG-RAN and focuses on the radio interface protocol architecture of NR connected to 5GC (E-UTRA connected to 5GC is covered in the 36 series). Details of the radio interface protocols are specified in companion specifications of the 38 series.

2 References

The following documents contain provisions which, through reference in this text, constitute provisions of the present document.

- References are either specific (identified by date of publication, edition number, version number, etc.) or non-specific.
- For a specific reference, subsequent revisions do not apply.
- For a non-specific reference, the latest version applies. In the case of a reference to a 3GPP document (including a GSM document), a non-specific reference implicitly refers to the latest version of that document *in the same Release as the present document*.

[1] 3GPP TR 21.905: "Vocabulary for 3GPP Specifications".

[2] 3GPP TS 36.300: "Evolved Universal Terrestrial Radio Access (E-UTRA) and Evolved Universal Terrestrial Radio Access Network (E-UTRAN); Overall description; Stage 2".

[3] 3GPP TS 23.501: "System Architecture for the 5G System; Stage 2".

[4] 3GPP TS 38.401: "NG-RAN; Architecture description".

[5] 3GPP TS 33.501: "Security Architecture and Procedures for 5G System".

[6] 3GPP TS 38.321: "NR; Medium Access Control (MAC) protocol specification".

[7] 3GPP TS 38.322: "NR; Radio Link Control (RLC) protocol specification".

[8] 3GPP TS 38.323: "NR; Packet Data Convergence Protocol (PDCP) specification".

[9] 3GPP TS 37.324: "NR; Service Data Protocol (SDAP) specification".

[10] 3GPP TS 38.304: "NR; User Equipment (UE) procedures in idle mode".

[11] 3GPP TS 38.306: "NR; User Equipment (UE) radio access capabilities".

[12] 3GPP TS 38.331: "NR; Radio Resource Control (RRC); Protocol specification".

[13] 3GPP TS 38.133: "NR; Requirements for support of radio resource management".

[14] 3GPP TS 22.168: "Earthquake and Tsunami Warning System (ETWS) requirements; Stage 1".

[15] 3GPP TS 22.268: "Public Warning System (PWS) Requirements".

[16] 3GPP TS 38.410: "NG-RAN; NG general aspects and principles".

[17] 3GPP TS 38.420: "NG-RAN; Xn general aspects and principles".

[18] 3GPP TS 38.101: "NR; User Equipment (UE) radio transmission and reception".

[19] 3GPP TS 22.261: "Service requirements for next generation new services and markets".

[20] 3GPP TS 38.202: "NR; Physical layer services provided by the physical layer"

[21] 3GPP TS 37.340: "NR; Multi-connectivity; Overall description; Stage-2".

[22] 3GPP TS 23.502: "Procedures for the 5G System; Stage 2".

Samsung Exhibit 1011, Page 8 of 97

[23] IETF RFC 4960 (2007-09): "Stream Control Transmission Protocol".

[24] 3GPP TS 26.114: "Technical Specification Group Services and System Aspects; IP Multimedia Subsystem (IMS); Multimedia Telephony; Media handling and interaction".

[25] Void.

[26] 3GPP TS 38.413: "NG-RAN; NG Application Protocol (NGAP)".

[27] IETF RFC 3168 (09/2001): "The Addition of Explicit Congestion Notification (ECN) to IP".

[28] 3GPP TS 24.501: "NR; Non-Access-Stratum (NAS) protocol for 5G System (5GS)".

[29] 3GPP TS 36.331: "Evolved Universal Terrestrial Radio Access (E-UTRA); Radio Resource Control (RRC); Protocol specification".

3 Abbreviations and Definitions

3.1 Abbreviations

For the purposes of the present document, the abbreviations given in TR 21.905 [1], in TS 36.300 [2] and the following apply. An abbreviation defined in the present document takes precedence over the definition of the same abbreviation, if any, in TR 21.905 [1] and TS 36.300 [2].

5GC	5G Core Network
5QI	5G QoS Identifier
A-CSI	Aperiodic CSI
AKA	Authentication and Key Agreement
AMBR	Aggregate Maximum Bit Rate
AMC	Adaptive Modulation and Coding
AMF	Access and Mobility Management Function
ARP	Allocation and Retention Priority
BA	Bandwidth Adaptation
BCH	Broadcast Channel
BPSK	Binary Phase Shift Keying
C-RNTI	Cell RNTI
CBRA	Contention Based Random Access
CCE	Control Channel Element
CD-SSB	Cell Defining SSB
CFRA	Contention Free Random Access
CMAS	Commercial Mobile Alert Service
CORESET	Control Resource Set
DFT	Discrete Fourier Transform
DCI	Downlink Control Information
DL-SCH	Downlink Shared Channel
DMRS	Demodulation Reference Signal
DRX	Discontinuous Reception
ETWS	Earthquake and Tsunami Warning System
GFBR	Guaranteed Flow Bit Rate
I-RNTI	Inactive RNTI
INT-RNTI	Interruption RNTI
LDPC	Low Density Parity Check
MDBV	Maximum Data Burst Volume
MIB	Master Information Block
MICO	Mobile Initiated Connection Only
MFBR	Maximum Flow Bit Rate
MMTEL	Multimedia telephony
MNO	Mobile Network Operator
MU-MIMO	Multi User MIMO
NCGI	NR Cell Global Identifier

Samsung Exhibit 1011, Page 9 of 97

NCR	Neighbour Cell Relation
NCRT	Neighbour Cell Relation Table
NGAP	NG Application Protocol
NR	NR Radio Access
P-RNTI	Paging RNTI
PCH	Paging Channel
PCI	Physical Cell Identifier
PDCCH	Physical Downlink Control Channel
PDSCH	Physical Downlink Shared Channel
PO	Paging Occasion
PRACH	Physical Random Access Channel
PRB	Physical Resource Block
PRG	Precoding Resource block Group
PSS	Primary Synchronisation Signal
PUCCH	Physical Uplink Control Channel
PUSCH	Physical Uplink Shared Channel
PWS	Public Warning System
QAM	Quadrature Amplitude Modulation
QFI	QoS Flow ID
QPSK	Quadrature Phase Shift Keying
RA-RNTI	Random Access RNTI
RACH	Random Access Channel
RANAC	RAN-based Notification Area Code
REG	Resource Element Group
RMSI	Remaining Minimum SI
RNA	RAN-based Notification Area
RNAU	RAN-based Notification Area Update
RNTI	Radio Network Temporary Identifier
RQA	Reflective QoS Attribute
RQoS	Reflective Quality of Service
RS	Reference Signal
RSRP	Reference Signal Received Power
RSRQ	Reference Signal Received Quality
SD	Slice Differentiator
SDAP	Service Data Adaptation Protocol
SFI-RNTI	Slot Format Indication RNTI
SIB	System Information Block
SI-RNTI	System Information RNTI
SLA	Service Level Agreement
SMC	Security Mode Command
SMF	Session Management Function
S-NSSAI	Single Network Slice Selection Assistance Information
SPS	Semi-Persistent Scheduling
SR	Scheduling Request
SRS	Sounding Reference Signal
SS	Synchronization Signal
SSB	SS/PBCH block
SSS	Secondary Synchronisation Signal
SST	Slice/Service Type
SU-MIMO	Single User MIMO
SUL	Supplementary Uplink
TA	Timing Advance
TPC	Transmit Power Control
UCI	Uplink Control Information
UL-SCH	Uplink Shared Channel
UPF	User Plane Function
URLLC	Ultra-Reliable and Low Latency Communications
Xn-C	Xn-Control plane
Xn-U	Xn-User plane
XnAP	Xn Application Protocol

Samsung Exhibit 1011, Page 10 of 97

3.2 Definitions

For the purposes of the present document, the terms and definitions given in TR 21.905 [1], in TS 36.300 [2] and the following apply. A term defined in the present document takes precedence over the definition of the same term, if any, in TR 21.905 [1] and TS 36.300 [2].

Cell-Defining SSB: an SSB with an RMSI associated.

CORESET#0: the control resource set for at least SIB1 scheduling, can be configured either via MIB or via dedicated RRC signalling.

gNB: node providing NR user plane and control plane protocol terminations towards the UE, and connected via the NG interface to the 5GC.

Intra-system Handover: Handover that does not involve a CN change (EPC or 5GC).

Inter-system Handover: Handover that involves a CN change (EPC or 5GC).

MSG1: preamble transmission of the random access procedure.

MSG3: first scheduled transmission of the random access procedure.

ng-eNB: node providing E-UTRA user plane and control plane protocol terminations towards the UE, and connected via the NG interface to the 5GC.

NG-C: control plane interface between NG-RAN and 5GC.

NG-U: user plane interface between NG-RAN and 5GC.

NG-RAN node: either a gNB or an ng-eNB.

Numerology: corresponds to one subcarrier spacing in the frequency domain. By scaling a reference subcarrier spacing by an integer *N*, different numerologies can be defined.

Xn: network interface between NG-RAN nodes.

4 Overall Architecture and Functional Split

4.1 Overall Architecture

An NG-RAN node is either:

- a gNB, providing NR user plane and control plane protocol terminations towards the UE; or
- an ng-eNB, providing E-UTRA user plane and control plane protocol terminations towards the UE.

The gNBs and ng-eNBs are interconnected with each other by means of the Xn interface. The gNBs and ng-eNBs are also connected by means of the NG interfaces to the 5GC, more specifically to the AMF (Access and Mobility Management Function) by means of the NG-C interface and to the UPF (User Plane Function) by means of the NG-U interface (see TS 23.501 [3]).

NOTE: The architecture and the F1 interface for a functional split are defined in TS 38.401 [4].

The NG-RAN architecture is illustrated in Figure 4.1-1 below.

Samsung Exhibit 1011, Page 11 of 97

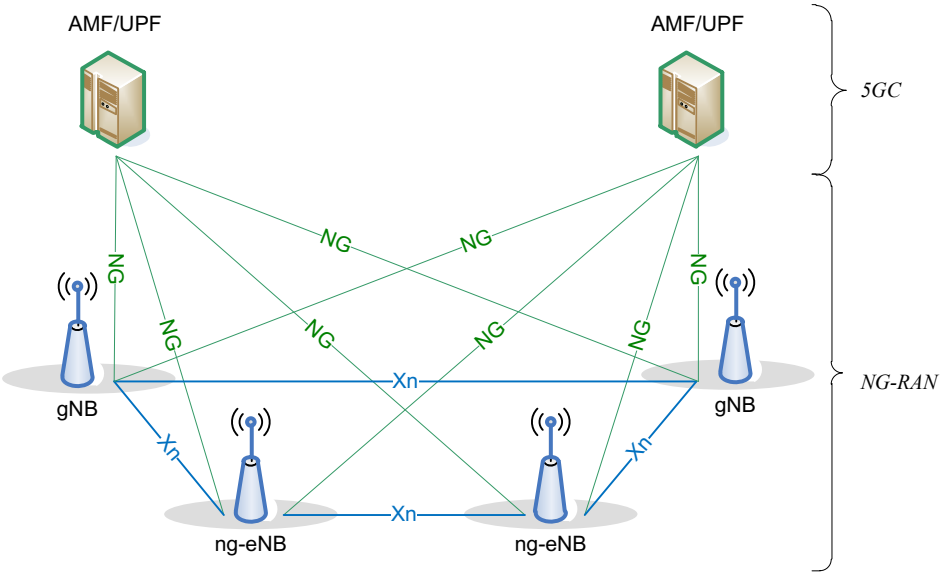

Figure 4.1-1: Overall Architecture

4.2 Functional Split

The **gNB** and ng-eNB host the following functions:

- Functions for Radio Resource Management: Radio Bearer Control, Radio Admission Control, Connection Mobility Control, Dynamic allocation of resources to UEs in both uplink and downlink (scheduling);
- IP header compression, encryption and integrity protection of data;
- Selection of an AMF at UE attachment when no routing to an AMF can be determined from the information provided by the UE;
- Routing of User Plane data towards UPF(s);
- Routing of Control Plane information towards AMF;
- Connection setup and release;
- Scheduling and transmission of paging messages;
- Scheduling and transmission of system broadcast information (originated from the AMF or OAM);
- Measurement and measurement reporting configuration for mobility and scheduling;
- Transport level packet marking in the uplink;
- Session Management;
- Support of Network Slicing;
- QoS Flow management and mapping to data radio bearers;
- Support of UEs in RRC_INACTIVE state;
- Distribution function for NAS messages;
- Radio access network sharing;
- Dual Connectivity;
- Tight interworking between NR and E-UTRA.

The **AMF** hosts the following main functions (see TS 23.501 [3]):

Samsung Exhibit 1011, Page 12 of 97

- NAS signalling termination;
- NAS signalling security;
- AS Security control;
- Inter CN node signalling for mobility between 3GPP access networks;
- Idle mode UE Reachability (including control and execution of paging retransmission);
- Registration Area management;
- Support of intra-system and inter-system mobility;
- Access Authentication;
- Access Authorization including check of roaming rights;
- Mobility management control (subscription and policies);
- Support of Network Slicing;
- SMF selection.

The **UPF** hosts the following main functions (see TS 23.501 [3]):

- Anchor point for Intra-/Inter-RAT mobility (when applicable);
- External PDU session point of interconnect to Data Network;
- Packet routing & forwarding;
- Packet inspection and User plane part of Policy rule enforcement;
- Traffic usage reporting;
- Uplink classifier to support routing traffic flows to a data network;
- Branching point to support multi-homed PDU session;
- QoS handling for user plane, e.g. packet filtering, gating, UL/DL rate enforcement;
- Uplink Traffic verification (SDF to QoS flow mapping);
- Downlink packet buffering and downlink data notification triggering.

The Session Management function (**SMF**) hosts the following main functions (see TS 23.501 [3]):

- Session Management;
- UE IP address allocation and management;
- Selection and control of UP function;
- Configures traffic steering at UPF to route traffic to proper destination;
- Control part of policy enforcement and QoS;
- Downlink Data Notification.

This is summarized on the figure below where yellow boxes depict the logical nodes and white boxes depict the main functions.

Samsung Exhibit 1011, Page 13 of 97

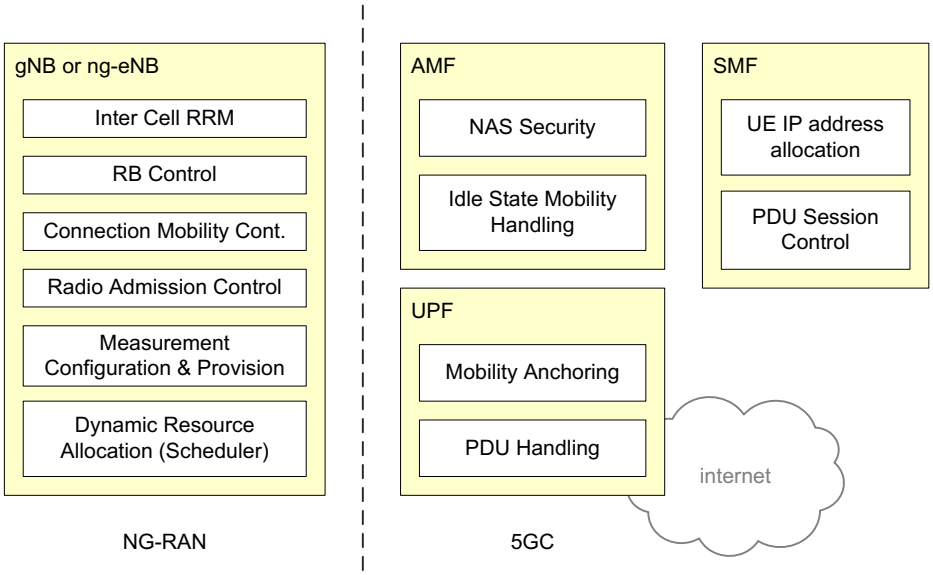

Figure 4.2-1: Functional Split between NG-RAN and 5GC

4.3 Network Interfaces

4.3.1 NG Interface

4.3.1.1 NG User Plane

The NG user plane interface (NG-U) is defined between the NG-RAN node and the UPF. The user plane protocol stack of the NG interface is shown on Figure 4.3.1.1-1. The transport network layer is built on IP transport and GTP-U is used on top of UDP/IP to carry the user plane PDUs between the NG-RAN node and the UPF.

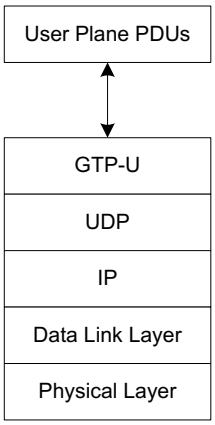

Figure 4.3.1.1-1: NG-U Protocol Stack

NG-U provides non-guaranteed delivery of user plane PDUs between the NG-RAN node and the UPF.

Further details of NG-U can be found in TS 38.410 [16].

4.3.1.2 NG Control Plane

The NG control plane interface (NG-C) is defined between the NG-RAN node and the AMF. The control plane protocol stack of the NG interface is shown on Figure 4.3.1.2-1. The transport network layer is built on IP transport. For the reliable transport of signalling messages, SCTP is added on top of IP. The application layer signalling protocol is referred to as NGAP (NG Application Protocol). The SCTP layer provides guaranteed delivery of application layer messages. In the transport, IP layer point-to-point transmission is used to deliver the signalling PDUs.

Samsung Exhibit 1011, Page 14 of 97

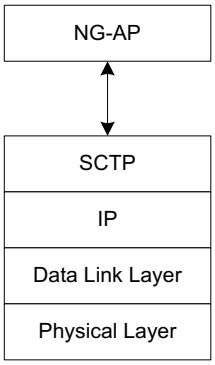

Figure 4.3.1.2-1: NG-C Protocol Stack

NG-C provides the following functions:

- NG interface management;
- UE context management;
- UE mobility management;
- Transport of NAS messages;
- Paging;
- PDU Session Management;
- Configuration Transfer;
- Warning Message Transmission.

Further details of NG-C can be found in TS 38.410 [16].

4.3.2 Xn Interface

4.3.2.1 Xn User Plane

The Xn User plane (Xn-U) interface is defined between two NG-RAN nodes. The user plane protocol stack on the Xn interface is shown in Figure 4.3.2.1-1. The transport network layer is built on IP transport and GTP-U is used on top of UDP/IP to carry the user plane PDUs.

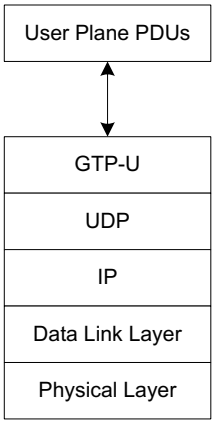

Figure 4.3.2.1-1: Xn-U Protocol Stack

Xn-U provides non-guaranteed delivery of user plane PDUs and supports the following functions:

- Data forwarding;

Samsung Exhibit 1011, Page 15 of 97

- Flow control.

Further details of Xn-U can be found in TS 38.420 [17].

4.3.2.2 Xn Control Plane

The Xn control plane interface (Xn-C) is defined between two NG-RAN nodes. The control plane protocol stack of the Xn interface is shown on Figure 4.3.2.2-1. The transport network layer is built on SCTP on top of IP. The application layer signalling protocol is referred to as XnAP (Xn Application Protocol). The SCTP layer provides the guaranteed delivery of application layer messages. In the transport IP layer point-to-point transmission is used to deliver the signalling PDUs.

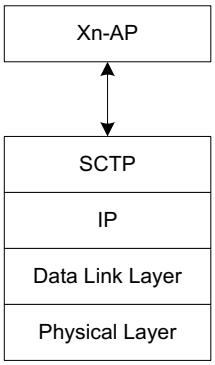

Figure 4.3.2.2-1: Xn-C Protocol Stack

The Xn-C interface supports the following functions:

- Xn interface management;
- UE mobility management, including context transfer and RAN paging;
- Dual connectivity.

Further details of Xn-C can be found in TS 38.420 [17].

4.4 Radio Protocol Architecture

4.4.1 User Plane

The figure below shows the protocol stack for the user plane, where SDAP, PDCP, RLC and MAC sublayers (terminated in gNB on the network side) perform the functions listed in subclause 6.

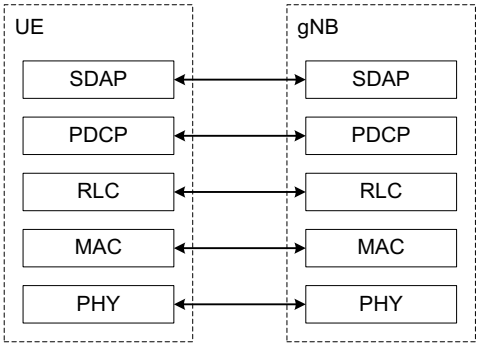

Figure 4.4.1-1: User Plane Protocol Stack

Samsung Exhibit 1011, Page 16 of 97

4.4.2 Control Plane

The figure below shows the protocol stack for the control plane, where:

- PDCP, RLC and MAC sublayers (terminated in gNB on the network side) perform the functions listed in subclause 6;
- RRC (terminated in gNB on the network side) performs the functions listed in subclause 7;
- NAS control protocol (terminated in AMF on the network side) performs the functions listed in TS 23.501 [3]), for instance: authentication, mobility management, security control…

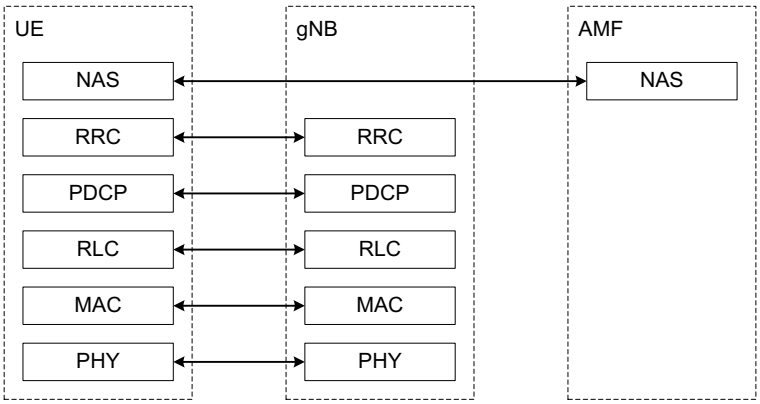

Figure 4.4.2-1: Control Plane Protocol Stack

4.5 Multi-Radio Dual Connectivity

NG-RAN supports Multi-Radio Dual Connectivity (MR-DC) operation whereby a UE in RRC_CONNECTED is configured to utilise radio resources provided by two distinct schedulers, located in two different NG-RAN nodes connected via a non-ideal backhaul, one providing NR access and the other one providing either E-UTRA or NR access. Further details of MR-DC operation can be found in TS 37.340 [21].

5 Physical Layer

5.1 Waveform, numerology and frame structure

The downlink transmission waveform is conventional OFDM using a cyclic prefix. The uplink transmission waveform is conventional OFDM using a cyclic prefix with a transform precoding function performing DFT spreading that can be disabled or enabled.

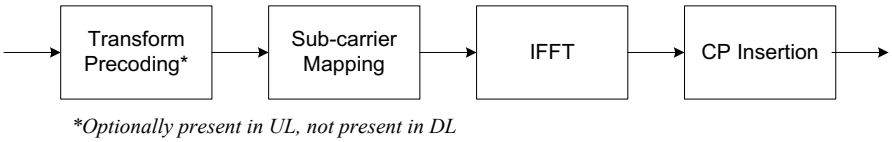

Figure 5.1-1: Transmitter block diagram for CP-OFDM with optional DFT-spreading

The numerology is based on exponentially scalable sub-carrier spacing $\Delta f = 2^{\mu} \times 15$ kHz with μ={0,1,3,4} for PSS, SSS and PBCH and μ={0,1,2,3} for other channels. Normal CP is supported for all sub-carrier spacings, Extended CP is supported for μ=2. 12 consecutive sub-carriers form a Physical Resource Block (PRB). Up to 275 PRBs are supported on a carrier.

Samsung Exhibit 1011, Page 17 of 97

Table 5.1-1: Supported transmission numerologies.

μ	$\Delta f = 2^{\mu} \cdot 15 [\text{kHz}]$	Cyclic prefix	Supported for data	Supported for synch
0	15	Normal	Yes	Yes
1	30	Normal	Yes	Yes
2	60	Normal, Extended	Yes	No
3	120	Normal	Yes	Yes
4	240	Normal	No	Yes

The UE may be configured with one or more bandwidth parts on a given component carrier, of which only one can be active at a time, as described in subclauses 7.8 and 6.10 respectively. The active bandwidth part defines the UE's operating bandwidth within the cell's operating bandwidth. For initial access, and until the UE's configuration in a cell is received, initial bandwidth part detected from system information is used.

Downlink and uplink transmissions are organized into frames with 10 ms duration, consisting of ten 1 ms subframes. Each frame is divided into two equally-sized half-frames of five subframes each. The slot duration is 14 symbols with Normal CP and 12 symbols with Extended CP, and scales in time as a function of the used sub-carrier spacing so that there is always an integer number of slots in a subframe.

Timing Advance *TA* is used to adjust the uplink frame timing relative to the downlink frame timing.

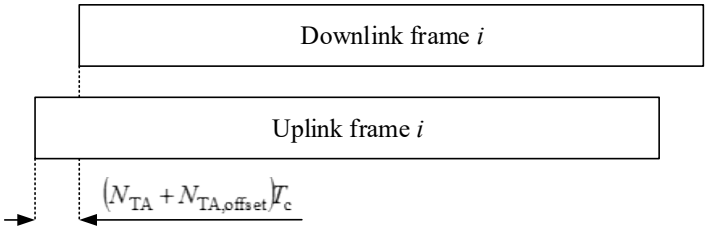

Figure 5.1-2: Uplink-downlink timing relation

Operation on both paired and unpaired spectrum is supported.

5.2 Downlink

5.2.1 Downlink transmission scheme

A closed loop Demodulation Reference Signal (DMRS) based spatial multiplexing is supported for Physical Downlink Shared Channel (PDSCH). Up to 8 and 12 orthogonal DL DMRS ports are supported for type 1 and type 2 DMRS respectively. Up to 8 orthogonal DL DMRS ports per UE are supported for SU-MIMO and up to 4 orthogonal DL DMRS ports per UE are supported for MU-MIMO. The number of SU-MIMO code words is one for 1-4 layer transmissions and two for 5-8 layer transmissions.

The DMRS and corresponding PDSCH are transmitted using the same precoding matrix and the UE does not need to know the precoding matrix to demodulate the transmission. The transmitter may use different precoder matrix for different parts of the transmission bandwidth, resulting in frequency selective precoding. The UE may also assume that the same precoding matrix is used across a set of Physical Resource Blocks (PRBs) denoted Precoding Resource Block Group (PRG).

Transmission durations from 2 to 14 symbols in a slot is supported.

Aggregation of multiple slots with Transport Block (TB) repetition is supported.

5.2.2 Physical-layer processing for physical downlink shared channel

The downlink physical-layer processing of transport channels consists of the following steps:

- Transport block CRC attachment;

Samsung Exhibit 1011, Page 18 of 97

- Code block segmentation and code block CRC attachment;
- Channel coding: LDPC coding;
- Physical-layer hybrid-ARQ processing;
- Rate matching;
- Scrambling;
- Modulation: QPSK, 16QAM, 64QAM and 256QAM;
- Layer mapping;
- Mapping to assigned resources and antenna ports.

The UE may assume that at least one symbol with demodulation reference signal is present on each layer in which PDSCH is transmitted to a UE, and up to 3 additional DMRS can be configured by higher layers.

Phase Tracking RS may be transmitted on additional symbols to aid receiver phase tracking.

The DL-SCH physical layer model is described in TS 38.202 [20].

5.2.3 Physical downlink control channels

The Physical Downlink Control Channel (PDCCH) can be used to schedule DL transmissions on PDSCH and UL transmissions on PUSCH, where the Downlink Control Information (DCI) on PDCCH includes:

- Downlink assignments containing at least modulation and coding format, resource allocation, and hybrid-ARQ information related to DL-SCH;
- Uplink scheduling grants containing at least modulation and coding format, resource allocation, and hybrid-ARQ information related to UL-SCH.

In addition to scheduling, PDCCH can be used to for

- Activation and deactivation of configured PUSCH transmission with configured grant;
- Activation and deactivation of PDSCH semi-persistent transmission;
- Notifying one or more UEs of the slot format;
- Notifying one or more UEs of the PRB(s) and OFDM symbol(s) where the UE may assume no transmission is intended for the UE;
- Transmission of TPC commands for PUCCH and PUSCH;
- Transmission of one or more TPC commands for SRS transmissions by one or more UEs;
- Switching a UE's active bandwidth part;
- Initiating a random access procedure.

A UE monitors a set of PDCCH candidates in the configured monitoring occasions in one or more configured COntrol REsource SETs (CORESETs) according to the corresponding search space configurations.

A CORESET consists of a set of PRBs with a time duration of 1 to 3 OFDM symbols. The resource units Resource Element Groups (REGs) and Control Channel Elements (CCEs) are defined within a CORESET with each CCE consisting a set of REGs. Control channels are formed by aggregation of CCE. Different code rates for the control channels are realized by aggregating different number of CCE. Interleaved and non-interleaved CCE-to-REG mapping are supported in a CORESET.

Polar coding is used for PDCCH.

Each resource element group carrying PDCCH carries its own DMRS.

QPSK modulation is used for PDCCH.

Samsung Exhibit 1011, Page 19 of 97

5.2.4 Synchronization signal and PBCH block

The Synchronization Signal and PBCH block (SSB) consists of primary and secondary synchronization signals (PSS, SSS), each occupying 1 symbol and 127 subcarriers, and PBCH spanning across 3 OFDM symbols and 240 subcarriers, but on one symbol leaving an unused part in the middle for SSS as show in Figure 5.2.4-1. The possible time locations of SSBs within a half-frame are determined by sub-carrier spacing and the periodicity of the half-frames where SSBs are transmitted is configured by the network. During a half-frame, different SSBs may be transmitted in different spatial directions (i.e. using different beams, spanning the coverage area of a cell).

Within the frequency span of a carrier, multiple SSBs can be transmitted. The PCIs of SSBs transmitted in different frequency locations do not have to be unique, i.e. different SSBs in the frequency domain can have different PCIs. However, when an SSB is associated with an RMSI, the SSB corresponds to an individual cell, which has a unique NCGI (see subclause 8.2). Such an SSB is referred to as a Cell-Defining SSB (CD-SSB). A PCell is always associated to a CD-SSB located on the synchronization raster.

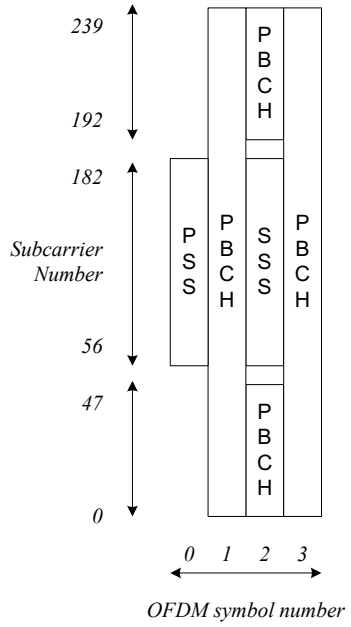

Figure 5.2.4-1: Time-frequency structure of SSB

Polar coding is used for PBCH.

The UE may assume a band-specific sub-carrier spacing for the SSB unless a network has configured the UE to assume a different sub-carrier spacing.

PBCH symbols carry its own frequency-multiplexed DMRS.

QPSK modulation is used for PBCH.

The PBCH physical layer model is described in TS 38.202 [20].

5.2.5 Physical layer procedures

5.2.5.1 Link adaptation

Link adaptation (AMC: adaptive modulation and coding) with various modulation schemes and channel coding rates is applied to the PDSCH. The same coding and modulation is applied to all groups of resource blocks belonging to the same L2 PDU scheduled to one user within one TTI and within a MIMO codeword.

For channel state estimation purposes, the UE may be configured to measure CSI-RS and estimate the downlink channel state based on the CSI-RS measurements. The UE feeds the estimated channel state back to the gNB to be used in link adaptation.

Samsung Exhibit 1011, Page 20 of 97

5.2.5.2 Power Control

Downlink power control can be used.

5.2.5.3 Cell search

Cell search is the procedure by which a UE acquires time and frequency synchronization with a cell and detects the Cell ID of that cell. NR cell search is based on the primary and secondary synchronization signals, and PBCH DMRS, located on the synchronization raster.

5.2.5.4 HARQ

Asynchronous Incremental Redundancy Hybrid ARQ is supported. The gNB provides the UE with the HARQ-ACK feedback timing either dynamically in the DCI or semi-statically in an RRC configuration.

The UE may be configured to receive code block group based transmissions where retransmissions may be scheduled to carry a sub-set of all the code blocks of a TB.

5.2.5.5 Reception of SIB1

The Master Information Block (MIB) on PBCH provides the UE with parameters (e.g. CORESET#0 configuration) for monitoring of PDCCH for scheduling PDSCH that carries the System Information Block 1 (SIB1). PBCH may also indicate that there is no associated SIB1, in which case the UE may be pointed to another frequency from where to search for an SSB that is associated with a SIB1 as well as a frequency range where the UE may assume no SSB associated with SIB1 is present. The indicated frequency range is confined within a contiguous spectrum allocation of the same operator in which SSB is detected.

5.3 Uplink

5.3.1 Uplink transmission scheme

Two transmission schemes are supported for PUSCH: codebook based transmission and non-codebook based transmission.

For codebook based transmission, the gNB provides the UE with a transmit precoding matrix indication in the DCI. The UE uses the indication to select the PUSCH transmit precoder from the codebook. For non-codebook based transmission, the UE determines its PUSCH precoder based on wideband SRI field from the DCI.

A closed loop DMRS based spatial multiplexing is supported for PUSCH. For a given UE, up to 4 layer transmissions are supported. The number of code words is one. When transform precoding is used, only a single MIMO layer transmission is supported.

Transmission durations from 1 to 14 symbols in a slot is supported.

Aggregation of multiple slots with TB repetition is supported.

Two types of frequency hopping are supported, intra-slot frequency hopping, and in case of slot aggregation, inter-slot frequency hopping.

PUSCH may be scheduled with DCI on PDCCH, or a semi-static configured grant may be provided over RRC, where two types of operation are supported:

- The first PUSCH is triggered with a DCI, with subsequent PUSCH transmissions following the RRC configuration and scheduling received on the DCI, or
- The PUSCH is triggered by data arrival to the UE's transmit buffer and the PUSCH transmissions follow the RRC configuration.

Samsung Exhibit 1011, Page 21 of 97

5.3.2 Physical-layer processing for physical uplink shared channel

The uplink physical-layer processing of transport channels consists of the following steps:

- Transport Block CRC attachment;
- Code block segmentation and Code Block CRC attachment;
- Channel coding: LDPC coding;
- Physical-layer hybrid-ARQ processing;
- Rate matching;
- Scrambling;
- Modulation: π/2 BPSK (with transform precoding only), QPSK, 16QAM, 64QAM and 256QAM;
- Layer mapping, transform precoding (enabled/disabled by configuration), and pre-coding;
- Mapping to assigned resources and antenna ports.

The UE transmits at least one symbol with demodulation reference signal on each layer on each frequency hop in which the PUSCH is transmitted, and up to 3 additional DMRS can be configured by higher layers.

Phase Tracking RS may be transmitted on additional symbols to aid receiver phase tracking.

The UL-SCH physical layer model is described in TS 38.202 [20].

5.3.3 Physical uplink control channel

Physical uplink control channel (PUCCH) carries the Uplink Control Information (UCI) from the UE to the gNB. Five formats of PUCCH exist, depending on the duration of PUCCH and the UCI payload size.

- Format #0: Short PUCCH of 1 or 2 symbols with small UCI payloads of up to two bits with UE multiplexing capacity of up to 6 UEs with 1-bit payload in the same PRB;
- Format #1: Long PUCCH of 4-14 symbols with small UCI payloads of up to two bits with UE multiplexing capacity of up to 84 UEs without frequency hopping and 36 UEs with frequency hopping in the same PRB;
- Format #2: Short PUCCH of 1 or 2 symbols with large UCI payloads of more than two bits with no UE multiplexing capability in the same PRBs;
- Format #3: Long PUCCH of 4-14 symbols with large UCI payloads with no UE multiplexing capability in the same PRBs;
- Format #4: Long PUCCH of 4-14 symbols with moderate UCI payloads with multiplexing capacity of up to 4 UEs in the same PRBs.

The short PUCCH format of up to two UCI bits is based on sequence selection, while the short PUCCH format of more than two UCI bits frequency multiplexes UCI and DMRS. The long PUCCH formats time-multiplex the UCI and DMRS. Frequency hopping is supported for long PUCCH formats and for short PUCCH formats of duration of 2 symbols. Long PUCCH formats can be repeated over multiple slots.

UCI multiplexing in PUSCH is supported when UCI and PUSCH transmissions coincide in time, either due to transmission of a UL-SCH transport block or due to triggering of A-CSI transmission without UL-SCH transport block:

- UCI carrying HARQ-ACK feedback with 1 or 2 bits is multiplexed by puncturing PUSCH;
- In all other cases UCI is multiplexed by rate matching PUSCH.

UCI consists of the following information:

- CSI;
- ACK/NAK;

Samsung Exhibit 1011, Page 22 of 97

- Scheduling request.

QPSK and π/2 BPSK modulation can be used for long PUCCH with more than 2 bits of information, QPSK is used for short PUCCH with more than 2 bits of information and BPSK and QPSK modulation can be used for long PUCCH with up to 2 information bits.

Transform precoding is applied to long PUCCH.

Channel coding used for uplink control information is described in table 5.3.3-1.

Table 5.3.3-1: Channel coding for uplink control information

Uplink Control Information size including CRC, if present	Channel code
1	Repetition code
2	Simplex code
3-11	Reed Muller code
>11	Polar code

5.3.4 Random access

Random access preamble sequences, of two different lengths are supported. Long sequence length 839 is applied with subcarrier spacings of 1.25 and 5 kHz and short sequence length 139 is applied with sub-carrier spacings 15, 30, 60 and 120 kHz. Long sequences support unrestricted sets and restricted sets of Type A and Type B, while short sequences support unrestricted sets only.

Multiple PRACH preamble formats are defined with one or more PRACH OFDM symbols, and different cyclic prefix and guard time. The PRACH preamble configuration to use is provided to the UE in the system information.

The UE calculates the PRACH transmit power for the retransmission of the preamble based on the most recent estimate pathloss and power ramping counter.

The system information provides information for the UE to determine the association between the SSB and the RACH resources. The RSRP threshold for SSB selection for RACH resource association is configurable by network.

5.3.5 Physical layer procedures

5.3.5.1 Link adaptation

Four types of link adaptation are supported as follows:

- Adaptive transmission bandwidth;
- Adaptive transmission duration;
- Transmission power control;
- Adaptive modulation and channel coding rate.

For channel state estimation purposes, the UE may be configured to transmit SRS that the gNB may use to estimate the uplink channel state and use the estimate in link adaptation.

5.3.5.2 Uplink Power control

The gNB determines the desired uplink transmit power and provides uplink transmit power control commands to the UE. The UE uses the provided uplink transmit power control commands to adjust its transmit power.

5.3.5.3 Uplink timing control

The gNB determines the desired Timing Advance setting and provides that to the UE. The UE uses the provided TA to determine its uplink transmit timing relative to the UE's observed downlink receive timing.

Samsung Exhibit 1011, Page 23 of 97

5.3.5.4 HARQ

Asynchronous Incremental Redundancy Hybrid ARQ is supported. The gNB schedules each uplink transmission and retransmission using the uplink grant on DCI.

The UE may be configured to transmit code block group based transmissions where retransmissions may be scheduled to carry a sub-set of all the code blocks of a transport block.

5.4 Carrier aggregation

5.4.1 Carrier aggregation

In Carrier Aggregation (CA), two or more Component Carriers (CCs) are aggregated. A UE may simultaneously receive or transmit on one or multiple CCs depending on its capabilities. CA is supported for both contiguous and non-contiguous CCs. When CA is deployed frame timing and SFN are aligned across cells that can be aggregated. The maximum number of configured CCs for a UE is 16 for DL and 16 for UL.

5.4.2 Supplementary Uplink

In conjunction with a UL/DL carrier pair (FDD band) or a bidirectional carrier (TDD band), a UE may be configured with additional, Supplementary Uplink (SUL). SUL differs from the aggregated uplink in that the UE may be scheduled to transmit either on the supplementary uplink or on the uplink of the carrier being supplemented, but not on both at the same time.

5.5 Transport Channels

The physical layer offers information transfer services to MAC and higher layers. The physical layer transport services are described by *how* and with what characteristics data are transferred over the radio interface. An adequate term for this is "Transport Channel". This should be clearly separated from the classification of *what* is transported, which relates to the concept of logical channels at MAC sublayer.

Downlink transport channel types are:

1. **Broadcast Channel (BCH)** characterised by:
   - fixed, pre-defined transport format;
   - requirement to be broadcast in the entire coverage area of the cell, either as a single message or by beamforming different BCH instances.
2. **Downlink Shared Channel (DL-SCH)** characterised by:
   - support for HARQ;
   - support for dynamic link adaptation by varying the modulation, coding and transmit power;
   - possibility to be broadcast in the entire cell;
   - possibility to use beamforming;
   - support for both dynamic and semi-static resource allocation;
   - support for UE discontinuous reception (DRX) to enable UE power saving.
3. **Paging Channel (PCH)** characterised by:
   - support for UE discontinuous reception (DRX) to enable UE power saving (DRX cycle is indicated by the network to the UE);
   - requirement to be broadcast in the entire coverage area of the cell, either as a single message or by beamforming different BCH instances;

Samsung Exhibit 1011, Page 24 of 97

- mapped to physical resources which can be used dynamically also for traffic/other control channels.

Uplink transport channel types are:

1. **Uplink Shared Channel (UL-SCH)** characterised by:
   - possibility to use beamforming;
   - support for dynamic link adaptation by varying the transmit power and potentially modulation and coding;
   - support for HARQ;
   - support for both dynamic and semi-static resource allocation.
2. **Random Access Channel(s) (RACH)** characterised by:
   - limited control information;
   - collision risk.

Association of transport channels to physical channels is described in TS 38.202 [20].

6 Layer 2

6.1 Overview

The layer 2 of NR is split into the following sublayers: Medium Access Control (MAC), Radio Link Control (RLC), Packet Data Convergence Protocol (PDCP) and Service Data Adaptation Protocol (SDAP). The two figures below depict the Layer 2 architecture for downlink and uplink, where:

- The physical layer offers to the MAC sublayer transport channels;
- The MAC sublayer offers to the RLC sublayer logical channels;
- The RLC sublayer offers to the PDCP sublayer RLC channels;
- The PDCP sublayer offers to the SDAP sublayer radio bearers;
- The SDAP sublayer offers to 5GC QoS flows;
- *Comp.* refers to header compression and *segm.* to segmentation;
- Control channels (BCCH, PCCH are not depicted for clarity).

NOTE: The gNB may not be able to guarantee that a L2 buffer overflow will never occur. If such overflow occurs, the UE may discard packets in the L2 buffer.

Samsung Exhibit 1011, Page 25 of 97

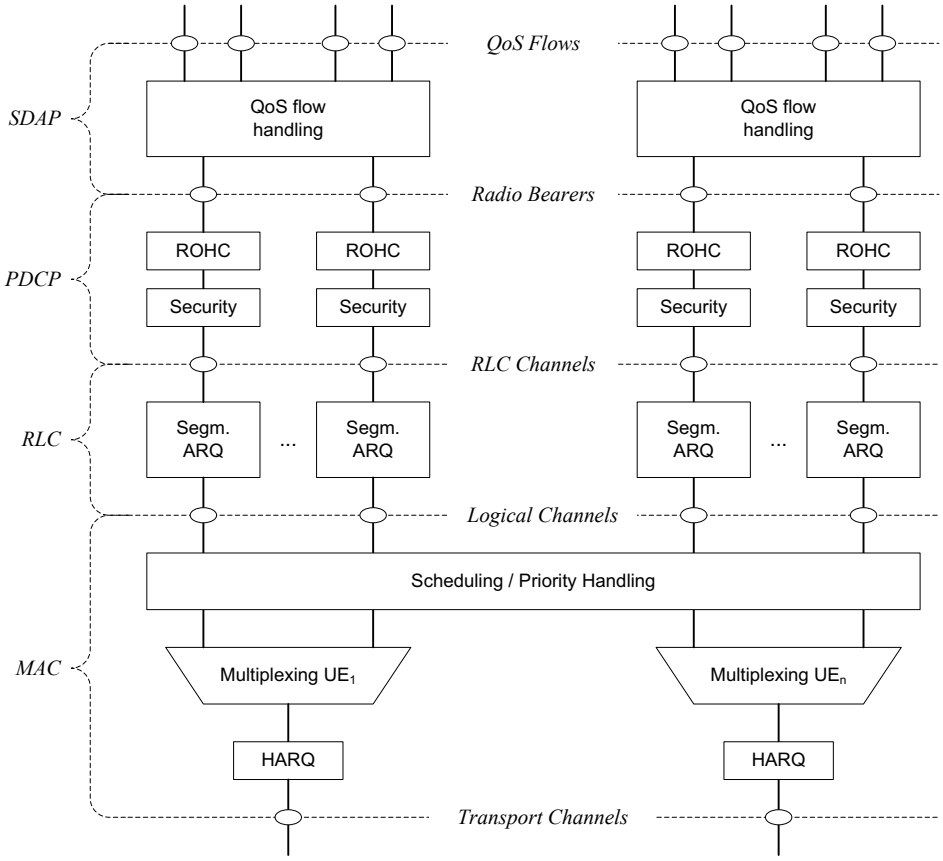

Figure 6.1-1: Downlink Layer 2 Structure

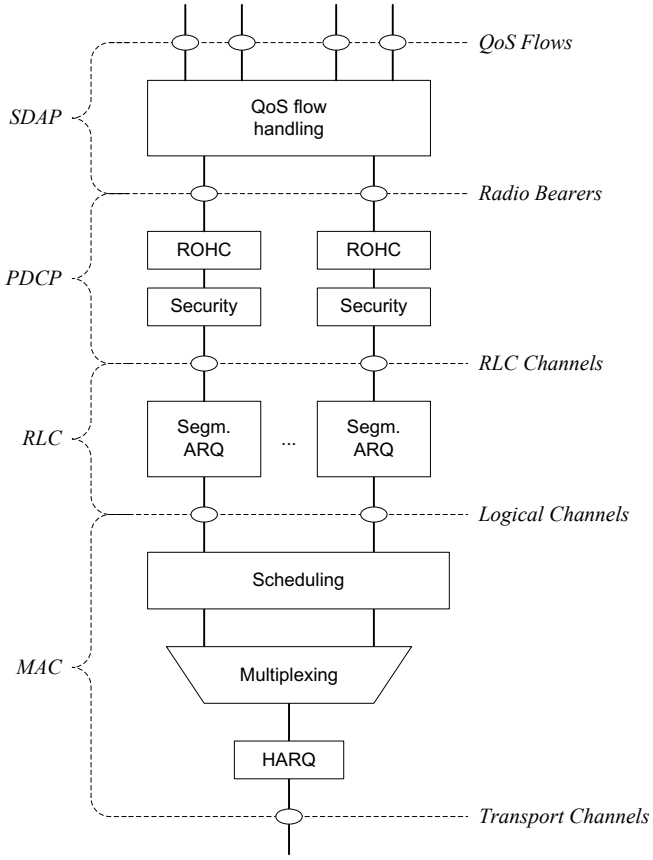

Figure 6.1-2: Uplink Layer 2 Structure

Samsung Exhibit 1011, Page 26 of 97

Radio bearers are categorized into two groups: data radio bearers (DRB) for user plane data and signalling radio bearers (SRB) for control plane data.

6.2 MAC Sublayer

6.2.1 Services and Functions

The main services and functions of the MAC sublayer include:

- Mapping between logical channels and transport channels;
- Multiplexing/demultiplexing of MAC SDUs belonging to one or different logical channels into/from transport blocks (TB) delivered to/from the physical layer on transport channels;
- Scheduling information reporting;
- Error correction through HARQ (one HARQ entity per cell in case of CA);
- Priority handling between UEs by means of dynamic scheduling;
- Priority handling between logical channels of one UE by means of logical channel prioritisation;
- Padding.

A single MAC entity can support multiple numerologies, transmission timings and cells. Mapping restrictions in logical channel prioritisation control which numerology(ies), cell(s), and transmission timing(s) a logical channel can use (see subclause 16.1.2).

6.2.2 Logical Channels

Different kinds of data transfer services as offered by MAC. Each logical channel type is defined by what type of information is transferred. Logical channels are classified into two groups: Control Channels and Traffic Channels. Control channels are used for the transfer of control plane information only:

- Broadcast Control Channel (BCCH): a downlink channel for broadcasting system control information.
- Paging Control Channel (PCCH): a downlink channel that carries paging messages.
- Common Control Channel (CCCH): channel for transmitting control information between UEs and network. This channel is used for UEs having no RRC connection with the network.
- Dedicated Control Channel (DCCH): a point-to-point bi-directional channel that transmits dedicated control information between a UE and the network. Used by UEs having an RRC connection.

Traffic channels are used for the transfer of user plane information only:

- Dedicated Traffic Channel (DTCH): point-to-point channel, dedicated to one UE, for the transfer of user information. A DTCH can exist in both uplink and downlink.

6.2.3 Mapping to Transport Channels

In Downlink, the following connections between logical channels and transport channels exist:

- BCCH can be mapped to BCH;
- BCCH can be mapped to DL-SCH;
- PCCH can be mapped to PCH;
- CCCH can be mapped to DL-SCH;
- DCCH can be mapped to DL-SCH;

Samsung Exhibit 1011, Page 27 of 97

- DTCH can be mapped to DL-SCH.

In Uplink, the following connections between logical channels and transport channels exist:

- CCCH can be mapped to UL-SCH;
- DCCH can be mapped to UL- SCH;
- DTCH can be mapped to UL-SCH.

6.2.4 HARQ

The HARQ functionality ensures delivery between peer entities at Layer 1. A single HARQ process supports one TB when the physical layer is not configured for downlink/uplink spatial multiplexing, and when the physical layer is configured for downlink/uplink spatial multiplexing, a single HARQ process supports one or multiple TBs.

6.3 RLC Sublayer

6.3.1 Transmission Modes

The RLC sublayer supports three transmission modes:

- Transparent Mode (TM);
- Unacknowledged Mode (UM);
- Acknowledged Mode (AM).

The RLC configuration is per logical channel with no dependency on numerologies and/or transmission durations, and ARQ can operate on any of the numerologies and/or transmission durations the logical channel is configured with.

For SRB0, paging and broadcast system information, TM mode is used. For other SRBs AM mode used. For DRBs, either UM or AM mode are used.

6.3.2 Services and Functions

The main services and functions of the RLC sublayer depend on the transmission mode and include:

- Transfer of upper layer PDUs;
- Sequence numbering independent of the one in PDCP (UM and AM);
- Error Correction through ARQ (AM only);
- Segmentation (AM and UM) and re-segmentation (AM only) of RLC SDUs;
- Reassembly of SDU (AM and UM);
- Duplicate Detection (AM only);
- RLC SDU discard (AM and UM);
- RLC re-establishment;
- Protocol error detection (AM only).

6.3.3 ARQ

The ARQ within the RLC sublayer has the following characteristics:

- ARQ retransmits RLC SDUs or RLC SDU segments based on RLC status reports;
- Polling for RLC status report is used when needed by RLC;

Samsung Exhibit 1011, Page 28 of 97

- RLC receiver can also trigger RLC status report after detecting a missing RLC SDU or RLC SDU segment.

6.4 PDCP Sublayer

6.4.1 Services and Functions

The main services and functions of the PDCP sublayer include:

- Transfer of data (user plane or control plane);
- Maintenance of PDCP SNs;
- Header compression and decompression using the ROHC protocol;
- Ciphering and deciphering;
- Integrity protection and integrity verification;
- Timer based SDU discard;
- For split bearers, routing;
- Duplication;
- Reordering and in-order delivery;
- Out-of-order delivery;
- Duplicate discarding.

Since PDCP does not allow COUNT to wrap around in DL and UL, it is up to the network to prevent it from happening (e.g. by using a release and add of the corresponding radio bearer or a full configuration).

6.5 SDAP Sublayer

The main services and functions of SDAP include:

- Mapping between a QoS flow and a data radio bearer;
- Marking QoS flow ID (QFI) in both DL and UL packets.

A single protocol entity of SDAP is configured for each individual PDU session.

6.6 L2 Data Flow

An example of the Layer 2 Data Flow is depicted on Figure 6.6-1, where a transport block is generated by MAC by concatenating two RLC PDUs from RB_x and one RLC PDU from RB_y. The two RLC PDUs from RB_x each corresponds to one IP packet (n and $n+1$) while the RLC PDU from RB_y is a segment of an IP packet (m).

NOTE: H depicts the headers and subheaders.

Samsung Exhibit 1011, Page 29 of 97

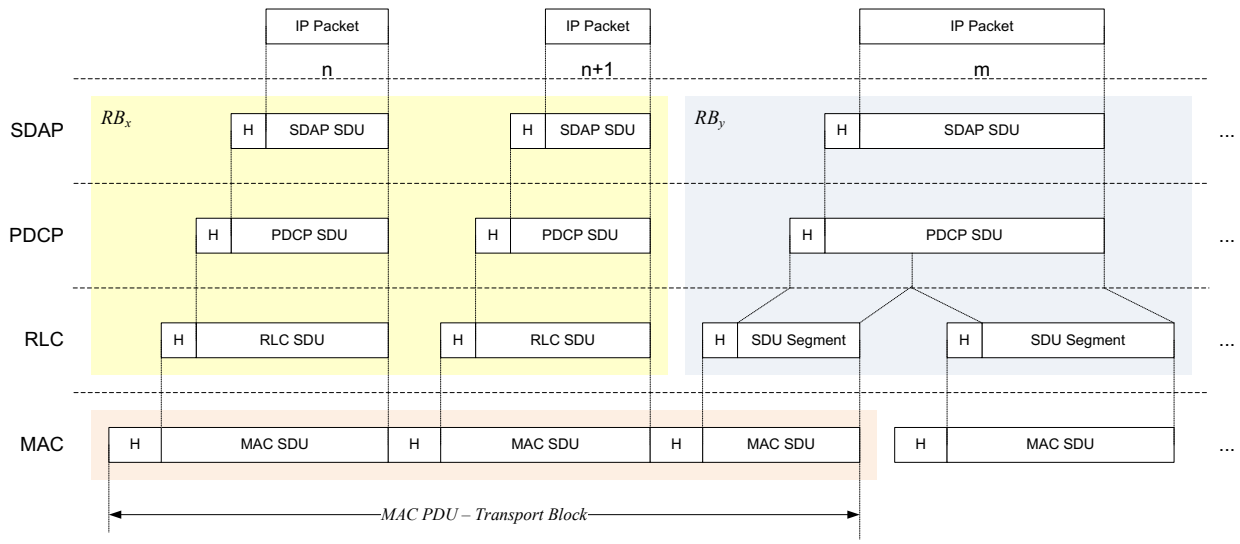

Figure 6.6-1: Data Flow Example

6.7 Carrier Aggregation

In case of CA, the multi-carrier nature of the physical layer is only exposed to the MAC layer for which one HARQ entity is required per serving cell as depicted on Figures 6.7-1 and 6.7-2 below:

- In both uplink and downlink, there is one independent hybrid-ARQ entity per serving cell and one transport block is generated per assignment/grant per serving cell in the absence of spatial multiplexing. Each transport block and its potential HARQ retransmissions are mapped to a single serving cell.

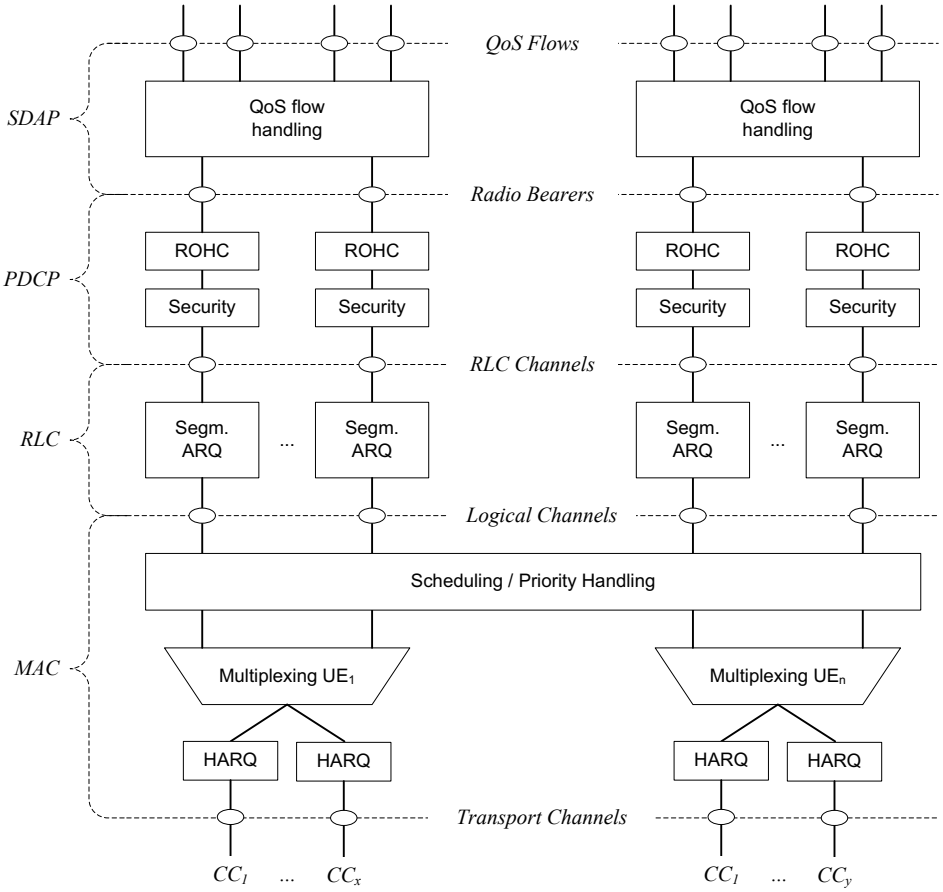

Figure 6.7-1: Layer 2 Structure for DL with CA configured

Samsung Exhibit 1011, Page 30 of 97

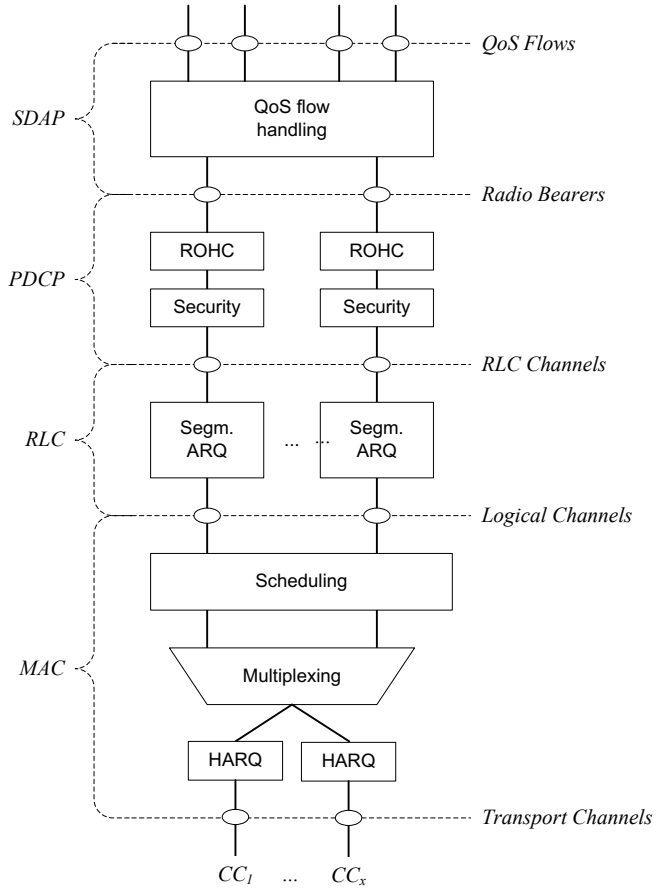

Figure 6.7-2: Layer 2 Structure for UL with CA configured

6.8 Dual Connectivity

When the UE is configured with SCG, the UE is configured with two MAC entities: one MAC entity for the MCG and one MAC entity for the SCG. Further details of DC operation can be found in TS 37.340 [21].

6.9 Supplementary Uplink

In case of Supplementary Uplink (SUL, see TS 38.101 [18]), the UE is configured with 2 ULs for one DL of the same cell, and uplink transmissions on those two ULs are controlled by the network to avoid overlapping PUSCH/PUCCH transmissions in time. Overlapping transmissions on PUSCH are avoided through scheduling while overlapping transmissions on PUCCH are avoided through configuration (PUCCH can only be configured for only one of the 2 ULs of the cell). In addition, initial access is supported in each of the uplink (see subclause 9.2.6). An example of SUL is given in Annex B.

6.10 Bandwidth Adaptation

With Bandwidth Adaptation (BA), the receive and transmit bandwidth of a UE need not be as large as the bandwidth of the cell and can be adjusted: the width can be ordered to change (e.g. to shrink during period of low activity to save power); the location can move in the frequency domain (e.g. to increase scheduling flexibility); and the subcarrier spacing can be ordered to change (e.g. to allow different services). A subset of the total cell bandwidth of a cell is referred to as a Bandwidth Part (BWP) and BA is achieved by configuring the UE with BWP(s) and telling the UE which of the configured BWPs is currently the active one.

Figure 6.10-1 below describes a scenario where 3 different BWPs are configured:

- BWP_1 with a width of 40 MHz and subcarrier spacing of 15 kHz;

Samsung Exhibit 1011, Page 31 of 97

- BWP_2 with a width of 10 MHz and subcarrier spacing of 15 kHz;
- BWP_3 with a width of 20 MHz and subcarrier spacing of 60 kHz.

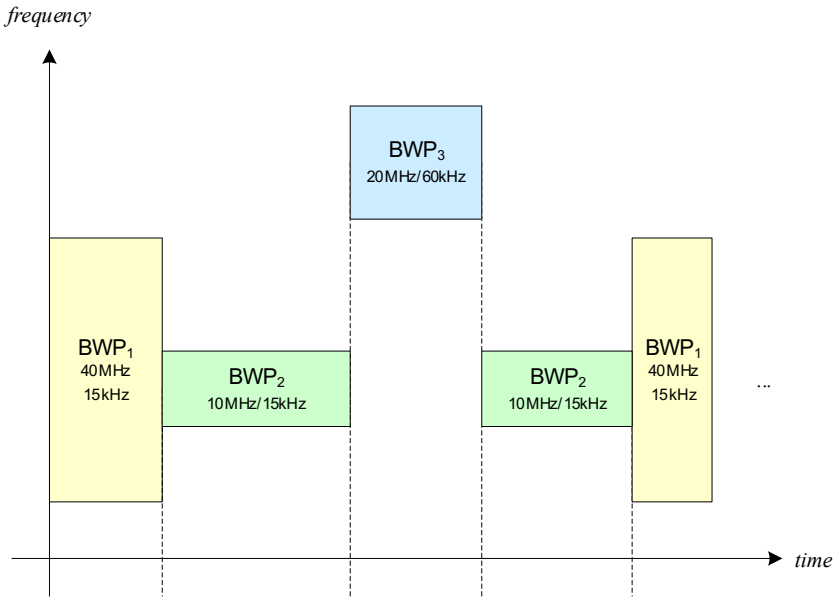

Figure 6.10-1: BA Example

7 RRC

7.1 Services and Functions

The main services and functions of the RRC sublayer include:

- Broadcast of System Information related to AS and NAS;
- Paging initiated by 5GC or NG-RAN;
- Establishment, maintenance and release of an RRC connection between the UE and NG-RAN including:
  - Addition, modification and release of carrier aggregation;
  - Addition, modification and release of Dual Connectivity in NR or between E-UTRA and NR.
- Security functions including key management;
- Establishment, configuration, maintenance and release of Signalling Radio Bearers (SRBs) and Data Radio Bearers (DRBs);
- Mobility functions including:
  - Handover and context transfer;
  - UE cell selection and reselection and control of cell selection and reselection;
  - Inter-RAT mobility.
- QoS management functions;
- UE measurement reporting and control of the reporting;
- Detection of and recovery from radio link failure;

Samsung Exhibit 1011, Page 32 of 97

- NAS message transfer to/from NAS from/to UE.

7.2 Protocol States

RRC supports the following states which can be characterised as follows:

- **RRC_IDLE**:
  - PLMN selection;
  - Broadcast of system information;
  - Cell re-selection mobility;
  - Paging for mobile terminated data is initiated by 5GC;
  - DRX for CN paging configured by NAS.
- **RRC_INACTIVE**:
  - PLMN selection;
  - Broadcast of system information;
  - Cell re-selection mobility;
  - Paging is initiated by NG-RAN (RAN paging);
  - RAN-based notification area (RNA) is managed by NG- RAN;
  - DRX for RAN paging configured by NG-RAN;
  - 5GC - NG-RAN connection (both C/U-planes) is established for UE;
  - The UE AS context is stored in NG-RAN and the UE;
  - NG-RAN knows the RNA which the UE belongs to.
- **RRC_CONNECTED**:
  - 5GC - NG-RAN connection (both C/U-planes) is established for UE;
  - The UE AS context is stored in NG-RAN and the UE;
  - NG-RAN knows the cell which the UE belongs to;
  - Transfer of unicast data to/from the UE;
  - Network controlled mobility including measurements.

7.3 System Information Handling

7.3.1 Overview

System Information (SI) consists of a MIB and a number of SIBs, which are divided into Minimum SI and Other SI:

- **Minimum SI** comprises basic information required for initial access and information for acquiring any other SI. Minimum SI consists of:
  - *MIB* contains cell barred status information and essential physical layer information of the cell required to receive further system information, e.g. CORESET#0 configuration. *MIB* is periodically broadcast on BCH.

Samsung Exhibit 1011, Page 33 of 97

- *SIB1* defines the scheduling of other system information blocks and contains information required for initial access. SIB1 is also referred to as Remaining Minimum SI (RMSI) and is periodically broadcast on DL-SCH or sent in a dedicated manner on DL-SCH to UEs in RRC_CONNECTED.

- **Other SI** encompasses all SIBs not broadcast in the Minimum SI. Those SIBs can either be periodically broadcast on DL-SCH, broadcast on-demand on DL-SCH (i.e. upon request from UEs in RRC_IDLE or RRC_INACTIVE), or sent in a dedicated manner on DL-SCH to UEs in RRC_CONNECTED. Other SI consists of:

  - *SIB2* contains cell re-selection information, mainly related to the serving cell;

  - *SIB3* contains information about the serving frequency and intra-frequency neighbouring cells relevant for cell re-selection (including cell re-selection parameters common for a frequency as well as cell specific re-selection parameters);

  - *SIB4* contains information about other NR frequencies and inter-frequency neighbouring cells relevant for cell re-selection (including cell re-selection parameters common for a frequency as well as cell specific re-selection parameters);

  - *SIB5* contains information about E-UTRA frequencies and E-UTRA neighbouring cells relevant for cell re-selection (including cell re-selection parameters common for a frequency as well as cell specific re-selection parameters);

  - *SIB6* contains an ETWS primary notification;

  - *SIB7* contains an ETWS secondary notification;

  - *SIB8* contains a CMAS warning notification;

  - *SIB9* contains information related to GPS time and Coordinated Universal Time (UTC).

Figure 7.3-1 below summarises System Information provisioning.

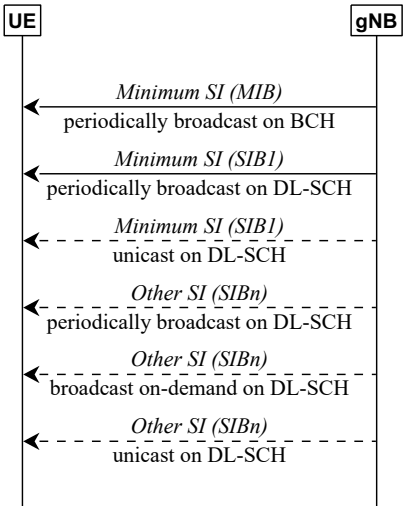

Figure 7.3-1: System Information Provisioning

For a cell/frequency that is considered for camping by the UE, the UE is not required to acquire the contents of the minimum SI of that cell/frequency from another cell/frequency layer. This does not preclude the case that the UE applies stored SI from previously visited cell(s).

If the UE cannot determine the full contents of the minimum SI of a cell by receiving from that cell, the UE shall consider that cell as barred.

In case of BA, the UE only acquires SI on the active BWP.

Samsung Exhibit 1011, Page 34 of 97

7.3.2 Scheduling

The MIB is mapped on the BCCH and carried on BCH while all other SI messages are mapped on the BCCH, where they are dynamically carried on DL-SCH. The scheduling of SI messages part of Other SI is indicated by *SIB1*.

For UEs in RRC_IDLE and RRC_INACTIVE, a request for Other SI triggers a random access procedure (see subclause 9.2.6) where MSG3 includes the SI request message unless the requested SI is associated to a subset of the PRACH resources, in which case MSG1 is used for indication of the requested Other SI. When MSG1 is used, the minimum granularity of the request is one SI message (i.e. a set of SIBs), one RACH preamble and/or PRACH resource can be used to request multiple SI messages and the gNB acknowledges the request in MSG2. When MSG 3 is used, the gNB acknowledges the request in MSG4.

The Other SI may be broadcast at a configurable periodicity and for a certain duration. The Other SI may also be broadcast when it is requested by UE in RRC_IDLE/RRC_INACTIVE.

For a UE to be allowed to camp on a cell it must have acquired the contents of the Minimum SI from that cell. There may be cells in the system that do not broadcast the Minimum SI and where the UE therefore cannot camp.

7.3.3 SI Modification

Change of system information (other than for ETWS/CMAS, see subclause 16.4) only occurs at specific radio frames, i.e. the concept of a modification period is used. System information may be transmitted a number of times with the same content within a modification period, as defined by its scheduling. The modification period is configured by system information.

When the network changes (some of the) system information, it first notifies the UEs about this change, i.e. this may be done throughout a modification period. In the next modification period, the network transmits the updated system information. Upon receiving a change notification, the UE acquires the new system information from the start of the next modification period. The UE applies the previously acquired system information until the UE acquires the new system information.

7.4 Access Control

NG-RAN supports overload and access control functionality such as RACH back off, RRC Connection Reject, RRC Connection Release and UE based access barring mechanisms.

One unified access control framework as specified in TS 22.261 [19] applies to all UE states (RRC_IDLE, RRC_INACTIVE and RRC_CONNECTED) for NR. NG-RAN broadcasts barring control information associated with Access Categories and Access Identities (in case of network sharing, the barring control information can be set individually for each PLMN). The UE determines whether an access attempt is authorized based on the barring information broadcast for the selected PLMN, and the selected Access Category and Access Identity(ies) for the access attempt:

- For NAS triggered requests, NAS determines the Access Category and Access Identity(ies);
- For AS triggered requests, RRC determines the Access Category while NAS determines the Access Identity(ies).

The gNB handles access attempts with establishment causes "emergency", "mps-PriorityAccess" and "mcs-PriorityAccess" (i.e. Emergency calls, MPS, MCS subscribers) with high priority and responds with RRC Reject to these access attempts only in extreme network load conditions that may threaten the gNB stability.

7.5 UE Capability Retrieval framework

The UE reports its UE radio access capabilities which are static at least when the network requests. The gNB can request what capabilities for the UE to report based on band information.

Samsung Exhibit 1011, Page 35 of 97

7.6 Transport of NAS Messages

NR provides reliable in-sequence delivery of NAS messages over SRBs in RRC, except at handover where losses or duplication can occur when PDCP is re-established. In RRC, NAS messages are sent in transparent containers. Piggybacking of NAS messages can occur in the following scenarios:

- At bearer establishment/modification/release in the DL;
- For transferring the initial NAS message during connection setup and connection resume in the UL.

NOTE: in addition to the integrity protection and ciphering performed by NAS, NAS messages can also be integrity protected and ciphered by PDCP.

7.7 Carrier Aggregation

When CA is configured, the UE only has one RRC connection with the network. At RRC connection establishment/re-establishment/handover, one serving cell provides the NAS mobility information, and at RRC connection re-establishment/handover, one serving cell provides the security input. This cell is referred to as the Primary Cell (PCell). Depending on UE capabilities, Secondary Cells (SCells) can be configured to form together with the PCell a set of serving cells. The configured set of serving cells for a UE therefore always consists of one PCell and one or more SCells.

The reconfiguration, addition and removal of SCells can be performed by RRC. At intra-NR handover, RRC can also add, remove, or reconfigure SCells for usage with the target PCell. When adding a new SCell, dedicated RRC signalling is used for sending all required system information of the SCell i.e. while in connected mode, UEs need not acquire broadcast system information directly from the SCells.

7.8 Bandwidth Adaptation

To enable BA on the PCell, the gNB configures the UE with UL and DL BWP(s). To enable BA on SCells in case of CA, the gNB configures the UE with DL BWP(s) at least (i.e. there may be none in the UL). For the PCell, the initial BWP is the BWP used for initial access. For the SCell(s), the initial BWP is the BWP configured for the UE to first operate at SCell activation.

In paired spectrum, DL and UL can switch BWP independently. In unpaired spectrum, DL and UL switch BWP simultaneously. Switching between configured BWPs happens by means of RRC signalling, DCI, inactivity timer or upon initiation of random access. When an inactivity timer is configured for a serving cell, the expiry of the inactivity timer associated to that cell switches the active BWP to a default BWP configured by the network. There can be at most one active BWP per cell, except when the serving cell is configured with SUL, in which case there can be at most one on each UL carrier.

7.9 UE Assistance Information

When configured to do so, the UE can signal the network through *UEAssistanceInformation* if it prefers an adjustment in the connected mode DRX cycle length, or if it is experiencing internal overheating. In the latter case, the UE can express a preference for temporarily reducing the number of maximum secondary component carriers, the maximum aggregated bandwidth and the number of maximum MIMO layers. In both cases, it is up to the gNB whether to accommodate the request.

8 NG Identities

8.1 UE Identities

In this subclause, the identities used by NR connected to 5GC are listed. For scheduling at cell level, the following identities are used:

- C-RNTI: unique UE identification used as an identifier of the RRC Connection and for scheduling;

Samsung Exhibit 1011, Page 36 of 97

- CS-RNTI: unique UE identification used for Semi-Persistent Scheduling in the downlink or configured grant in the uplink;
- INT-RNTI: identification of pre-emption in the downlink;
- MCS-C-RNTI: unique UE identification used for indicating an alternative MCS table for PDSCH and PUSCH;
- P-RNTI: identification of Paging and System Information change notification in the downlink;
- SI-RNTI: identification of Broadcast and System Information in the downlink;
- SP-CSI-RNTI: unique UE identification used for semi-persistent CSI reporting on PUSCH.

For power and slot format control, the following identities are used:

- SFI-RNTI: identification of slot format;
- TPC-PUCCH-RNTI: unique UE identification to control the power of PUCCH;
- TPC-PUSCH-RNTI: unique UE identification to control the power of PUSCH;
- TPC-SRS-RNTI: unique UE identification to control the power of SRS.

During the random access procedure, the following identities are also used:

- RA-RNTI: identification of the Random Access Response in the downlink;
- Temporary C-RNTI: UE identification temporarily used for scheduling during the random access procedure;
- Random value for contention resolution: UE identification temporarily used for contention resolution purposes during the random access procedure.

For NR connected to 5GC, the following UE identities are used at NG-RAN level:

- I-RNTI: used to identify the UE context in RRC_INACTIVE.

8.2 Network Identities

The following identities are used in NG-RAN for identifying a specific network entity:

- AMF Name: used to identify an AMF.
- NR Cell Global Identifier (NCGI): used to identify NR cells globally. The NCGI is constructed from the PLMN identity the cell belongs to and the NR Cell Identity (NCI) of the cell.
- gNB Identifier (gNB ID): used to identify gNBs within a PLMN. The gNB ID is contained within the NCI of its cells.
- Global gNB ID: used to identify gNBs globally. The Global gNB ID is constructed from the PLMN identity the gNB belongs to and the gNB ID. The MCC and MNC are the same as included in the NCGI.
- Tracking Area identity (TAI): used to identify tracking areas. The TAI is constructed from the PLMN identity the tracking area belongs to and the TAC (Tracking Area Code) of the Tracking Area.
- Single Network Slice Selection Assistance information (S-NSSAI): identifies a network slice.

9 Mobility and State Transitions

9.1 Overview

Load balancing is achieved in NR with handover, redirection mechanisms upon RRC release and through the usage of inter-frequency and inter-RAT absolute priorities and inter-frequency Qoffset parameters.

Samsung Exhibit 1011, Page 37 of 97

Measurements to be performed by a UE for connected mode mobility are classified in at least three measurement types:

- Intra-frequency NR measurements;
- Inter-frequency NR measurements;
- Inter-RAT measurements for E-UTRA.

For each measurement type one or several measurement objects can be defined (a measurement object defines e.g. the carrier frequency to be monitored).

For each measurement object one or several reporting configurations can be defined (a reporting configuration defines the reporting criteria). Three reporting criteria are used: event triggered reporting, periodic reporting and event triggered periodic reporting.

The association between a measurement object and a reporting configuration is created by a measurement identity (a measurement identity links together one measurement object and one reporting configuration of the same RAT). By using several measurement identities (one for each measurement object, reporting configuration pair) it is then possible to:

- Associate several reporting configurations to one measurement object and;
- Associate one reporting configuration to several measurement objects.

The measurements identity is used as well when reporting results of the measurements.

Measurement quantities are considered separately for each RAT.

Measurement commands are used by NG-RAN to order the UE to start, modify or stop measurements.

Handover can be performed within the same RAT and/or CN, or it can involve a change of the RAT and/or CN.

Inter system fallback towards E-UTRAN is performed when 5GC does not support emergency services, voice services, for load balancing etc. Depending on factors such as CN interface availability, network configuration and radio conditions, the fallback procedure results in either CONNECTED state mobility (handover procedure) or IDLE state mobility (redirection) - see TS 23.501 [3] and TS 38.331 [12].

In the NG-C signalling procedure, the AMF based on support for emergency services, voice service, any other services or for load balancing etc, may indicate the target CN type as EPC or 5GC to the gNB node. When the target CN type is received by gNB, the target CN type is also conveyed to the UE in *RRCRelease* Message.

9.2 Intra-NR

9.2.1 Mobility in RRC_IDLE

9.2.1.1 Cell Selection

The principles of PLMN selection in NR are based on the 3GPP PLMN selection principles. Cell selection is required on transition from RM-DEREGISTERED to RM-REGISTERED, from CM-IDLE to CM-CONNECTED and from CM-CONNECTED to CM-IDLE and is based on the following principles:

- The UE NAS layer identifies a selected PLMN and equivalent PLMNs;
- Cell selection is always based on CD-SSBs located on the synchronization raster (see subclause 5.2.4):
  - The UE searches the NR frequency bands and for each carrier frequency identifies the strongest cell as per the CD-SSB. It then reads cell system information broadcast to identify its PLMN(s):
    - The UE may search each carrier in turn ("initial cell selection") or make use of stored information to shorten the search ("stored information cell selection").

Samsung Exhibit 1011, Page 38 of 97

- The UE seeks to identify a suitable cell; if it is not able to identify a suitable cell it seeks to identify an acceptable cell. When a suitable cell is found or if only an acceptable cell is found it camps on that cell and commence the cell reselection procedure:
  - A suitable cell is one for which the measured cell attributes satisfy the cell selection criteria; the cell PLMN is the selected PLMN, registered or an equivalent PLMN; the cell is not barred or reserved and the cell is not part of a tracking area which is in the list of "forbidden tracking areas for roaming";
  - An acceptable cell is one for which the measured cell attributes satisfy the cell selection criteria and the cell is not barred.

Transition to RRC_IDLE:

On transition from RRC_CONNECTED or RRC_INACTIVE to RRC_IDLE, a UE should camp on a cell as result of cell selection according to the frequency be assigned by RRC in the state transition message if any.

Recovery from out of coverage:

The UE should attempt to find a suitable cell in the manner described for stored information or initial cell selection above. If no suitable cell is found on any frequency or RAT, the UE should attempt to find an acceptable cell.

In multi-beam operations, the cell quality is derived amongst the beams corresponding to the same cell (see subclause 9.2.4).

9.2.1.2 Cell Reselection

A UE in RRC_IDLE performs cell reselection. The principles of the procedure are the following:

- Cell reselection is always based on CD-SSBs located on the synchronization raster (see subclause 5.2.4).
- The UE makes measurements of attributes of the serving and neighbour cells to enable the reselection process:
  - For the search and measurement of inter-frequency neighbouring cells, only the carrier frequencies need to be indicated.
- Cell reselection identifies the cell that the UE should camp on. It is based on cell reselection criteria which involves measurements of the serving and neighbour cells:
  - Intra-frequency reselection is based on ranking of cells;
  - Inter-frequency reselection is based on absolute priorities where a UE tries to camp on the highest priority frequency available;
  - An NCL can be provided by the serving cell to handle specific cases for intra- and inter-frequency neighbouring cells;
  - Black lists can be provided to prevent the UE from reselecting to specific intra- and inter-frequency neighbouring cells;
  - Cell reselection can be speed dependent;
  - Service specific prioritisation.

In multi-beam operations, the cell quality is derived amongst the beams corresponding to the same cell (see subclause 9.2.4).

9.2.1.3 State Transitions

The following figure describes the UE triggered transition from RRC_IDLE to RRC_CONNECTED (for the NAS part, see TS 23.502 [22]):

Samsung Exhibit 1011, Page 39 of 97

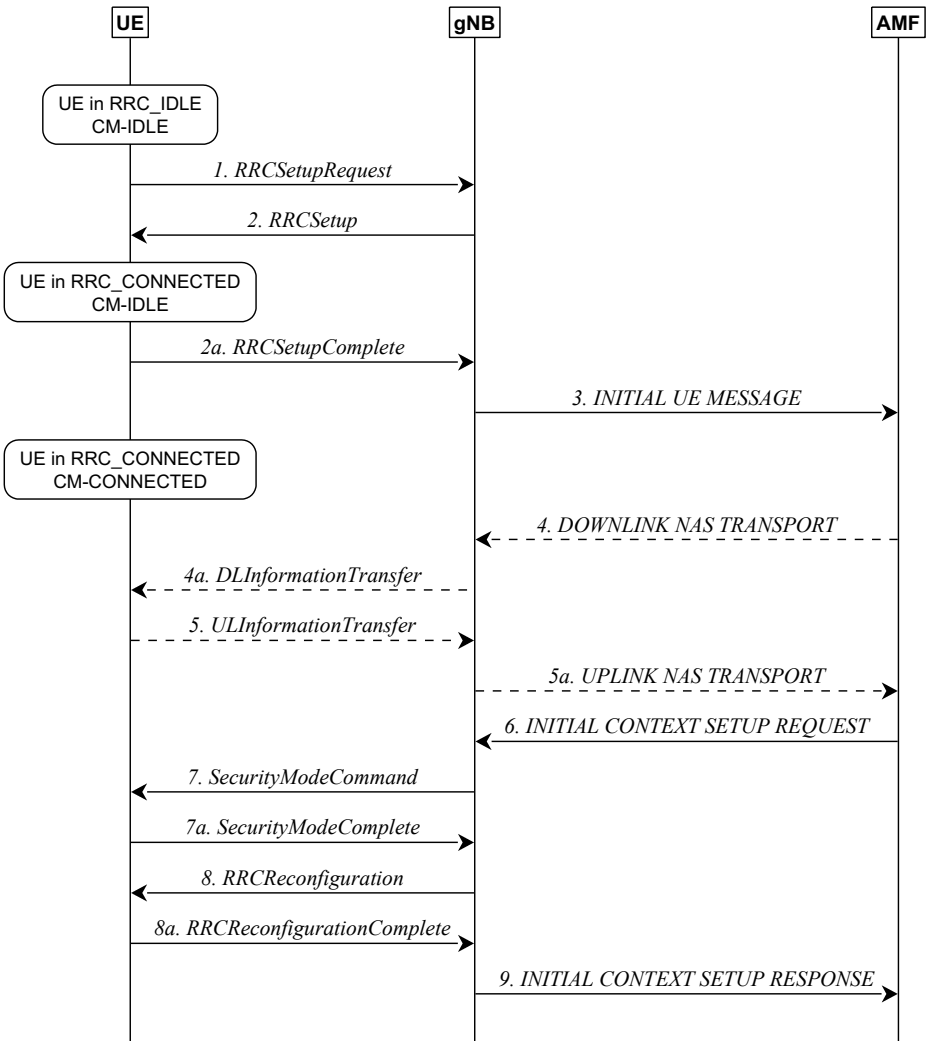

Figure 9.2.1.3-1: UE triggered transition from RRC_IDLE to RRC_CONNECTED

1. The UE requests to setup a new connection from RRC_IDLE.

2/2a. The gNB completes the RRC setup procedure.

NOTE: The scenario where the gNB rejects the request is described below.

3. The first NAS message from the UE, piggybacked in *RRCSetupComplete*, is sent to AMF.

4/4a/5/5a. Additional NAS messages may be exchanged between UE and AMF, see TS 23.502 [22].

6. The AMF prepares the UE context data (including PDU session context, the Security Key, UE Radio Capability and UE Security Capabilities, etc.) and sends it to the gNB.

7/7a. The gNB activates the AS security with the UE.

8/8a. The gNB performs the reconfiguration to setup SRB2 and DRBs.

9. The gNB informs the AMF that the setup procedure is completed.

NOTE 1: RRC messages in step 1 and 2 use SRB0, all the subsequent messages use SRB1. Messages in steps 7/7a are integrity protected. From step 8 on, all the messages are integrity protected and ciphered.

NOTE 2: For signalling only connection, step 8 is skipped since SRB2 and DRBs are not not setup.

The following figure describes the rejection from the network when the UE attempts to setup a connection from RRC_IDLE:

Samsung Exhibit 1011, Page 40 of 97

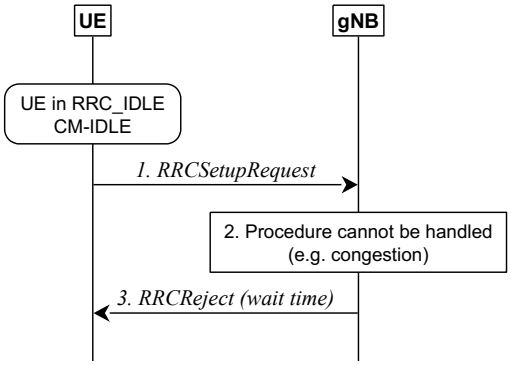

Figure 9.2.1.3-2: Rejection of UE triggered transition from RRC_IDLE

1. UE attempts to setup a new connection from RRC_IDLE.
2. The gNB is not able to handle the procedure, for instance due to congestion.
3. The gNB sends *RRCReject* (with a wait time) to keep the UE in RRC_IDLE.

9.2.2 Mobility in RRC_INACTIVE

9.2.2.1 Overview

RRC_INACTIVE is a state where a UE remains in CM-CONNECTED and can move within an area configured by NG-RAN (the RNA) without notifying NG-RAN. In RRC_INACTIVE, the last serving gNB node keeps the UE context and the UE-associated NG connection with the serving AMF and UPF.

If the last serving gNB receives DL data from the UPF or DL UE-associated signalling from the AMF (except the UE Context Release Command message) while the UE is in RRC_INACTIVE, it pages in the cells corresponding to the RNA and may send XnAP RAN Paging to neighbour gNB(s) if the RNA includes cells of neighbour gNB(s).

Upon receiving the UE Context Release Command message while the UE is in RRC_INACTIVE, the last serving gNB may page in the cells corresponding to the RNA and may send XnAP RAN Paging to neighbour gNB(s) if the RNA includes cells of neighbour gNB(s), in order to release UE explicitly.

Upon receiving the NG RESET message while the UE is in RRC_INACTIVE, the last serving gNB may page involved UEs in the cells corresponding to the RNA and may send XnAP RAN Paging to neighbour gNB(s) if the RNA includes cells of neighbour gNB(s) in order to explicitly release involved UEs.

Upon RAN paging failure, the gNB behaves according to TS 23.501 [3].

The AMF provides to the NG-RAN node the Core Network Assistance Information to assist the NG-RAN node's decision whether the UE can be sent to RRC_INACTIVE. The Core Network Assistance Information includes the registration area configured for the UE, the Periodic Registration Update timer, and the UE Identity Index value, and may include the UE specific DRX, an indication if the UE is configured with Mobile Initiated Connection Only (MICO) mode by the AMF, and the Expected UE Behaviour. The UE registration area is taken into account by the NG-RAN node when configuring the RNA. The UE specific DRX and UE Identity Index value are used by the NG-RAN node for RAN paging. The Periodic Registration Update timer is taken into account by the NG-RAN node to configure Periodic RNA Update timer. The NG-RAN node takes into account the Expected UE Behaviour to assist the UE RRC state transition decision.

At transition to RRC_INACTIVE the NG-RAN node may configure the UE with a periodic RNA Update timer value. At periodic RNA Update timer expiry without notification from the UE, the gNB behaves as specified in TS 23.501 [3].

If the UE accesses a gNB other than the last serving gNB, the receiving gNB triggers the XnAP Retrieve UE Context procedure to get the UE context from the last serving gNB and may also trigger an Xn-U Address Indication procedure including tunnel information for potential recovery of data from the last serving gNB. Upon successful UE context retrieval, the receiving gNB shall perform the slice-aware admission control in case of receiving slice information and becomes the serving gNB and it further triggers the NGAP Path Switch Request and applicable RRC procedures. After the path switch procedure, the serving gNB triggers release of the UE context at the last serving gNB by means of the XnAP UE Context Release procedure.

Samsung Exhibit 1011, Page 41 of 97

In case the UE is not reachable at the last serving gNB, the gNB shall:

- Fail any AMF initiated UE-associated class 1 procedure which allows the signalling of unsuccessful operation in the respective response message; and
- Trigger the NAS Non Delivery Indication procedure to report the non-delivery of any NAS PDU received from the AMF for the UE.

If the UE accesses a gNB other than the last serving gNB and the receiving gNB does not find a valid UE Context, the receiving gNB can perform establishment of a new RRC connection instead of resumption of the previous RRC connection. UE context retrieval will also fail and hence a new RRC connection needs to be established if the serving AMF changes.

A UE in the RRC_INACTIVE state is required to initiate RNA update procedure when it moves out of the configured RNA. When receiving RNA update request from the UE, the receiving gNB triggers the XnAP Retrieve UE Context procedure to get the UE context from the last serving gNB and may decide to send the UE back to RRC_INACTIVE state, move the UE into RRC_CONNECTED state, or send the UE to RRC_IDLE. In case of periodic RNA update, if the last serving gNB decides not to relocate the UE context, it fails the Retrieve UE Context procedure and sends the UE back to RRC_INACTIVE, or to RRC_IDLE directly by an encapsulated *RRCRelease* message.

9.2.2.2 Cell Reselection

A UE in RRC_INACTIVE performs cell reselection. The principles of the procedure are as for the RRC_IDLE state (see subclause 9.2.1.2).

9.2.2.3 RAN-Based Notification Area

A UE in the RRC_INACTIVE state can be configured by the last serving NG-RAN node with an RNA, where:

- the RNA can cover a single or multiple cells, and shall be contained within the CN registration area; in this release Xn connectivity should be available within the RNA;
- a RAN-based notification area update (RNAU) is periodically sent by the UE and is also sent when the cell reselection procedure of the UE selects a cell that does not belong to the configured RNA.

There are several different alternatives on how the RNA can be configured:

- List of cells:
  - A UE is provided an explicit list of cells (one or more) that constitute the RNA.
- List of RAN areas:
  - A UE is provided (at least one) RAN area ID, where a RAN area is a subset of a CN Tracking Area or equal to a CN Tracking Area. A RAN area is specified by one RAN area ID, which consists of a TAC and optionally a RAN area Code;
  - A cell broadcasts one or more RAN area IDs in the system information.

NG-RAN may provide different RNA definitions to different UEs but not mix different definitions to the same UE at the same time. UE shall support all RNA configuration options listed above.

9.2.2.4 State Transitions

9.2.2.4.1 UE triggered transition from RRC_INACTIVE to RRC_CONNECTED

The following figure describes the UE triggered transition from RRC_INACTIVE to RRC_CONNECTED in case of UE context retrieval success:

Samsung Exhibit 1011, Page 42 of 97

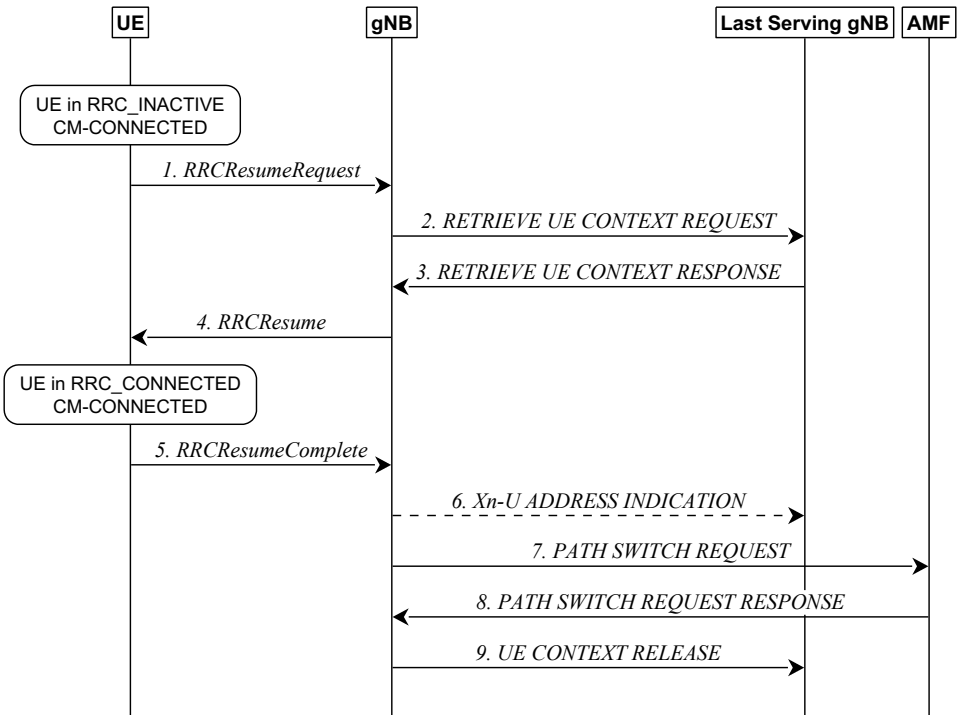

Figure 9.2.2.4.1-1: UE triggered transition from RRC_INACTIVE to RRC_CONNECTED (UE context retrieval success)

1. The UE resumes from RRC_INACTIVE, providing the I-RNTI, allocated by the last serving gNB.
2. The gNB, if able to resolve the gNB identity contained in the I-RNTI, requests the last serving gNB to provide UE Context data.
3. The last serving gNB provides UE context data.

4/5. The gNB and UE completes the resumption of the RRC connection.

NOTE: User Data can also be sent in step 5 if the grant allows.

6. If loss of DL user data buffered in the last serving gNB shall be prevented, the gNB provides forwarding addresses.

7/8. The gNB performs path switch.

9. The gNB triggers the release of the UE resources at the last serving gNB.

After step 1 above, when the gNB decides to reject the Resume Request and keep the UE in RRC_INACTIVE without any reconfiguration (e.g. as described in the two examples below), or when the gNB decides to setup a new RRC connection, SRB0 (without security) can be used. When the gNB decides to reconfigure the UE (e.g. with a new DRX cycle or RNA) or when the gNB decides to push the UE to RRC_IDLE, SRB1 (with at least integrity protection) shall be used.

NOTE: SRB1 can only be used once the UE Context is retrieved i.e. after step 3.

The following figure describes the UE triggered transition from RRC_INACTIVE to RRC_CONNECTED in case of UE context retrieval failure:

Samsung Exhibit 1011, Page 43 of 97

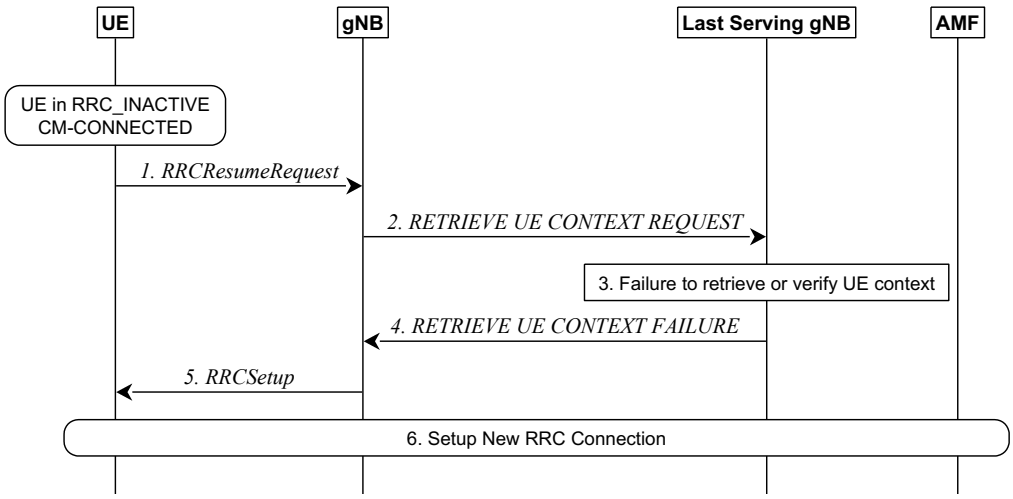

Figure 9.2.2.4.1-2: UE triggered transition from RRC_INACTIVE to RRC_CONNECTED (UE context retrieval failure)

1. The UE resumes from RRC_INACTIVE, providing the I-RNTI, allocated by the last serving gNB.
2. The gNB, if able to resolve the gNB identity contained in the I-RNTI, requests the last serving gNB to provide UE Context data.
3. The last serving gNB cannot retrieve or verify the UE context data.
4. The last serving gNB indicates the failure to the gNB.
5. The gNB performs a fallback to establish a new RRC connection by sending *RRCSetup*.
6. A new connection is setup as described in sub-clause 9.2.1.3.1.

The following figure describes the rejection form the network when the UE attempts to resume a connection from RRC_INACTIVE:

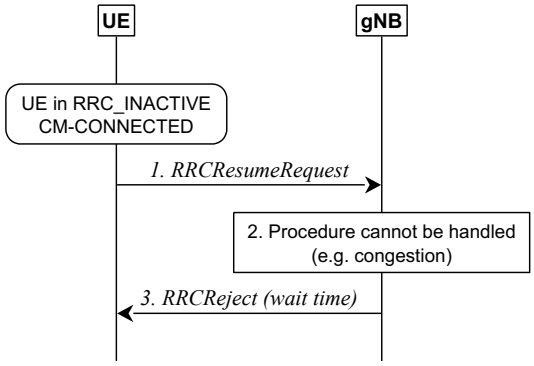

Figure 9.2.2.4.1-3: Reject from the network, UE attempts to resume a connection

1. UE attempts to resume the connection from RRC_INACTIVE.
2. The gNB is not able to handle the procedure, for instance due to congestion.
3. The gNB sends *RRCReject* (with a wait time) to keep the UE in RRC_INACTIVE.

9.2.2.4.2 Network triggered transition from RRC_INACTIVE to RRC_CONNECTED

The following figure describes the network triggered transition from RRC_INACTIVE to RRC_CONNECTED:

Samsung Exhibit 1011, Page 44 of 97

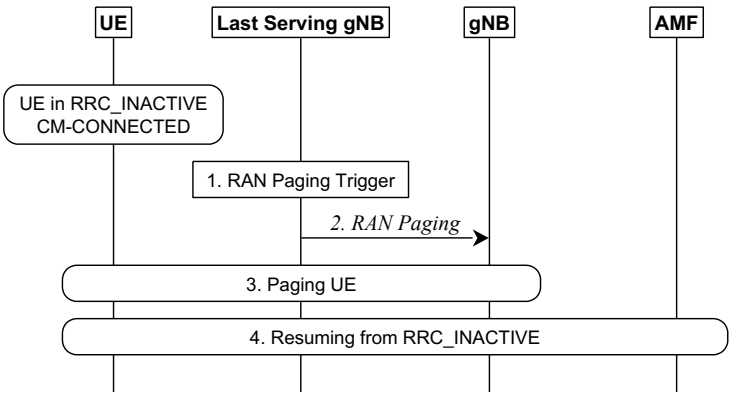

Figure 9.2.2.4.2-1: Network triggered transition from RRC_INACTIVE to RRC_CONNECTED

1. A RAN paging trigger event occurs (incoming DL user plane, DL signalling from 5GC, etc.).
2. RAN paging is triggered; either only in the cells controlled by the last serving gNB or also by means of Xn RAN Paging in cells controlled by other gNBs, configured to the UE in the RAN-based Notification Area (RNA).
3. The UE is paged with the I-RNTI.
4. If the UE has been successfully reached, it attempts to resume from RRC_INACTIVE, as described in sub-clause 9.2.2.4.1.

9.2.2.5 RNA update

The following figure describes the UE triggered RNA update procedure involving context retrieval over Xn. The procedure may be triggered when the UE moves out of the configured RNA, or periodically.

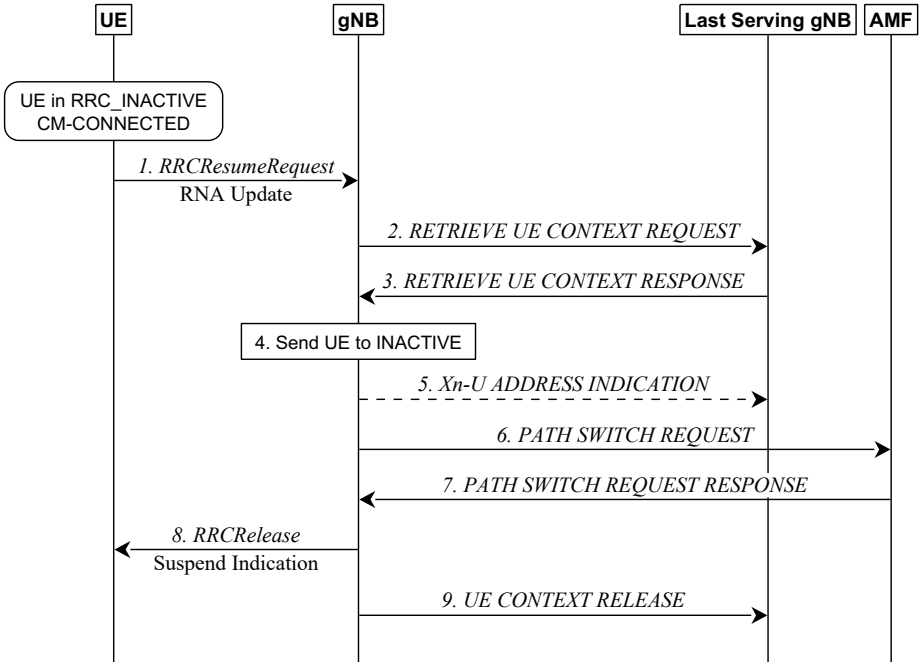

Figure 9.2.2.5-1: RNA update procedure with UE context relocation

1. The UE resumes from RRC_INACTIVE, providing the I-RNTI allocated by the last serving gNB and appropriate cause value, e.g., RAN notification area update.
2. The gNB, if able to resolve the gNB identity contained in the I-RNTI, requests the last serving gNB to provide UE Context, providing the cause value received in step 1.

Samsung Exhibit 1011, Page 45 of 97

3. The last serving gNB may provide the UE context (as assumed in the following). Alternatively, the last serving gNB may decide to move the UE to RRC_IDLE (and the procedure follows steps 3 and later of figure 9.2.2.5-3) or, if the UE is still within the previously configured RNA, to keep the UE context in the last serving gNB and to keep the UE in RRC_INACTIVE (and the procedure follows steps 3 and later of figure 9.2.2.5-2).

4. The gNB may move the UE to RRC_CONNECTED (and the procedure follows step 4 of Figure 9.2.2.4.1-1), or send the UE back to RRC_IDLE (in which case an *RRCRelease* message is sent by the gNB), or send the UE back to RRC_INACTIVE as assumed in the following.

5. If loss of DL user data buffered in the last serving gNB shall be prevented, the gNB provides forwarding addresses.

6./7. The gNB performs path switch.

8. The gNB keeps the UE in RRC_INACTIVE state by sending *RRCRelease* with suspend indication.

9. The gNB triggers the release of the UE resources at the last serving gNB.

The following figure describes the RNA update procedure for the case when the UE is still within the configured RNA and the last serving gNB decides not to relocate the UE context and to keep the UE in RRC_INACTIVE:

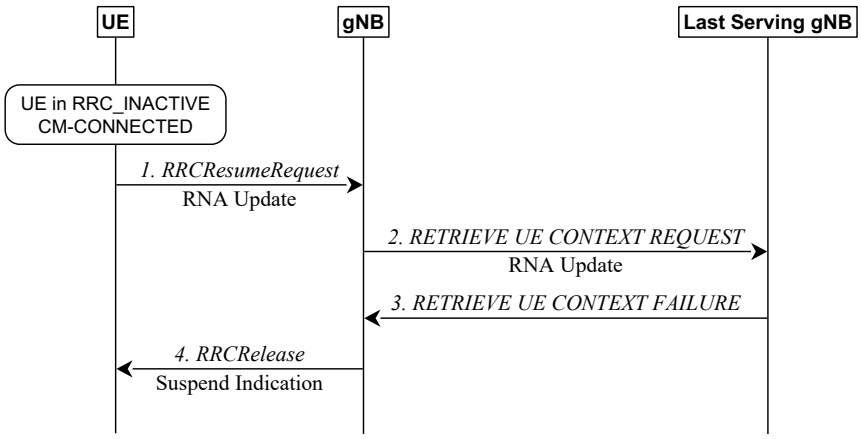

Figure 9.2.2.5-2: Periodic RNA update procedure without UE context relocation

1. The UE resumes from RRC_INACTIVE, providing the I-RNTI allocated by the last serving gNB and appropriate cause value, e.g., RAN notification area update.

2. The gNB, if able to resolve the gNB identity contained in the I-RNTI, requests the last serving gNB to provide UE Context, providing the cause value received in step 1.

3. The last serving gNB stores received information to be used in the next resume attempt (e.g. C-RNTI and PCI related to the resumption cell), and responds to the gNB with the RETRIEVE UE CONTEXT FAILURE message including an encapsulated *RRCRelease* message. The *RRCRelease* message includes Suspend Indication.

4. The gNB forwards the *RRCRelease* message to the UE.

The following figure describes the RNA update procedure for the case when the last serving gNB decides to move the UE to RRC_IDLE:

Samsung Exhibit 1011, Page 46 of 97

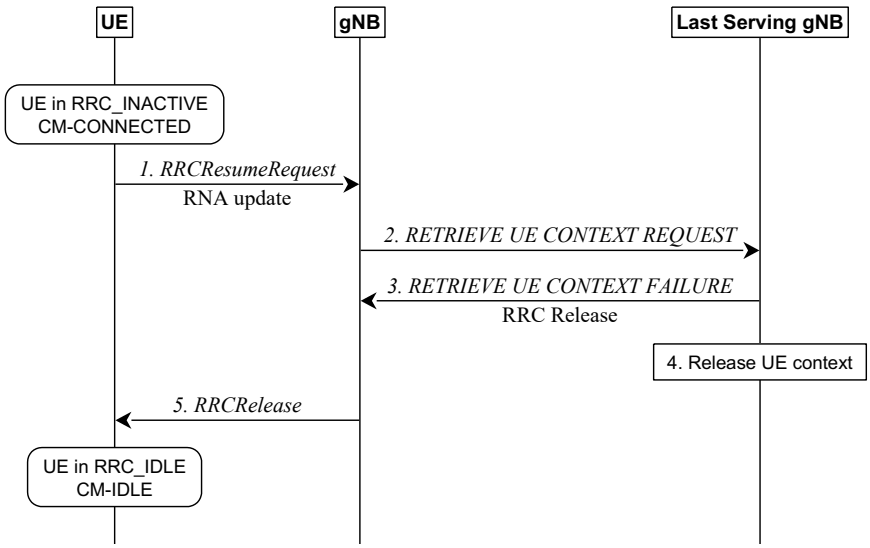

Figure 9.2.2.5-3: RNA update procedure with transition to RRC_IDLE

1. The UE resumes from RRC_INACTIVE, providing the I-RNTI allocated by the last serving gNB and appropriate cause value, e.g., RAN notification area update.
2. The gNB, if able to resolve the gNB identity contained in the I-RNTI, requests the last serving gNB to provide UE Context, providing the cause value received in step 1.
3. Instead of providing the UE context, the last serving gNB provides an *RRCRelease* message to move the UE to RRC_IDLE.
4. The last serving gNB deletes the UE context.
5. The gNB sends the *RRCRelease* which triggers the UE to move to RRC_IDLE.

9.2.3 Mobility in RRC_CONNECTED

9.2.3.1 Overview

Network controlled mobility applies to UEs in RRC_CONNECTED and is categorized into two types of mobility: cell level mobility and beam level mobility.

Cell Level Mobility requires explicit RRC signalling to be triggered, i.e. handover. For inter-gNB handover, the signalling procedures consist of at least the following elemental components illustrated in Figure 9.2.3.1-1:

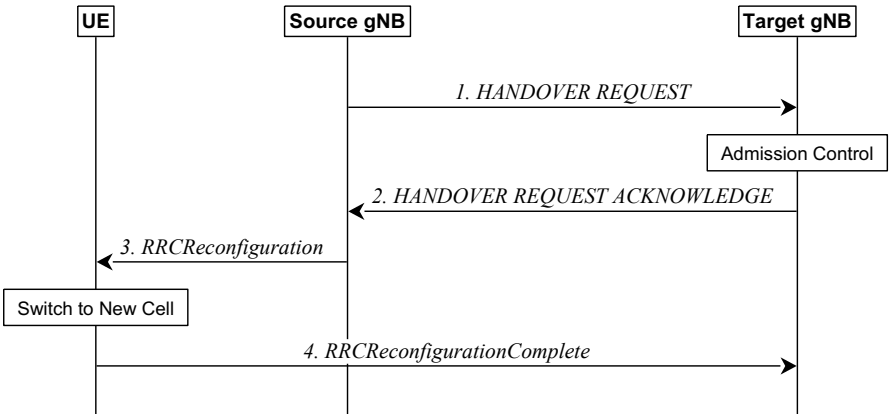

Figure 9.2.3.1-1: Inter-gNB handover procedures

1. The source gNB initiates handover and issues a Handover Request over the Xn interface.

Samsung Exhibit 1011, Page 47 of 97

2. The target gNB performs admission control and provides the RRC configuration as part of the Handover Acknowledgement.
3. The source gNB provides the RRC configuration to the UE in the Handover Command. The Handover Command message includes at least cell ID and all information required to access the target cell so that the UE can access the target cell without reading system information. For some cases, the information required for contention-based and contention-free random access can be included in the Handover Command message. The access information to the target cell may include beam specific information, if any.
4. The UE moves the RRC connection to the target gNB and replies the Handover Complete.

NOTE: User Data can also be sent in step 4 if the grant allows.

The handover mechanism triggered by RRC requires the UE at least to reset the MAC entity and re-establish RLC. RRC managed handovers with and without PDCP entity re-establishment are both supported. For DRBs using RLC AM mode, PDCP can either be re-established together with a security key change or initiate a data recovery procedure without a key change. For DRBs using RLC UM mode and for SRBs, PDCP can either be re-established together with a security key change or remain as it is without a key change.

Data forwarding, in-sequence delivery and duplication avoidance at handover can be guaranteed when the target gNB uses the same DRB configuration as the source gNB.

Timer based handover failure procedure is supported in NR. RRC connection re-establishment procedure is used for recovering from handover failure.

Beam Level Mobility does not require explicit RRC signalling to be triggered. The gNB provides via RRC signalling the UE with measurement configuration containing configurations of SSB/CSI resources and resource sets, reports and trigger states for triggering channel and interference measurements and reports. Beam Level Mobility is then dealt with at lower layers by means of physical layer and MAC layer control signalling, and RRC is not required to know which beam is being used at a given point in time.

SSB-based Beam Level Mobility is based on the SSB associated to the initial DL BWP and can only be configured for the initial DL BWPs and for DL BWPs containing the SSB associated to the initial DL BWP. For other DL BWPs, Beam Level Mobility can only be performed based on CSI-RS.

9.2.3.2 Handover

9.2.3.2.1 C-Plane Handling

The intra-NR RAN handover performs the preparation and execution phase of the handover procedure performed without involvement of the 5GC, i.e. preparation messages are directly exchanged between the gNBs. The release of the resources at the source gNB during the handover completion phase is triggered by the target gNB. The figure below depicts the basic handover scenario where neither the AMF nor the UPF changes:

Samsung Exhibit 1011, Page 48 of 97

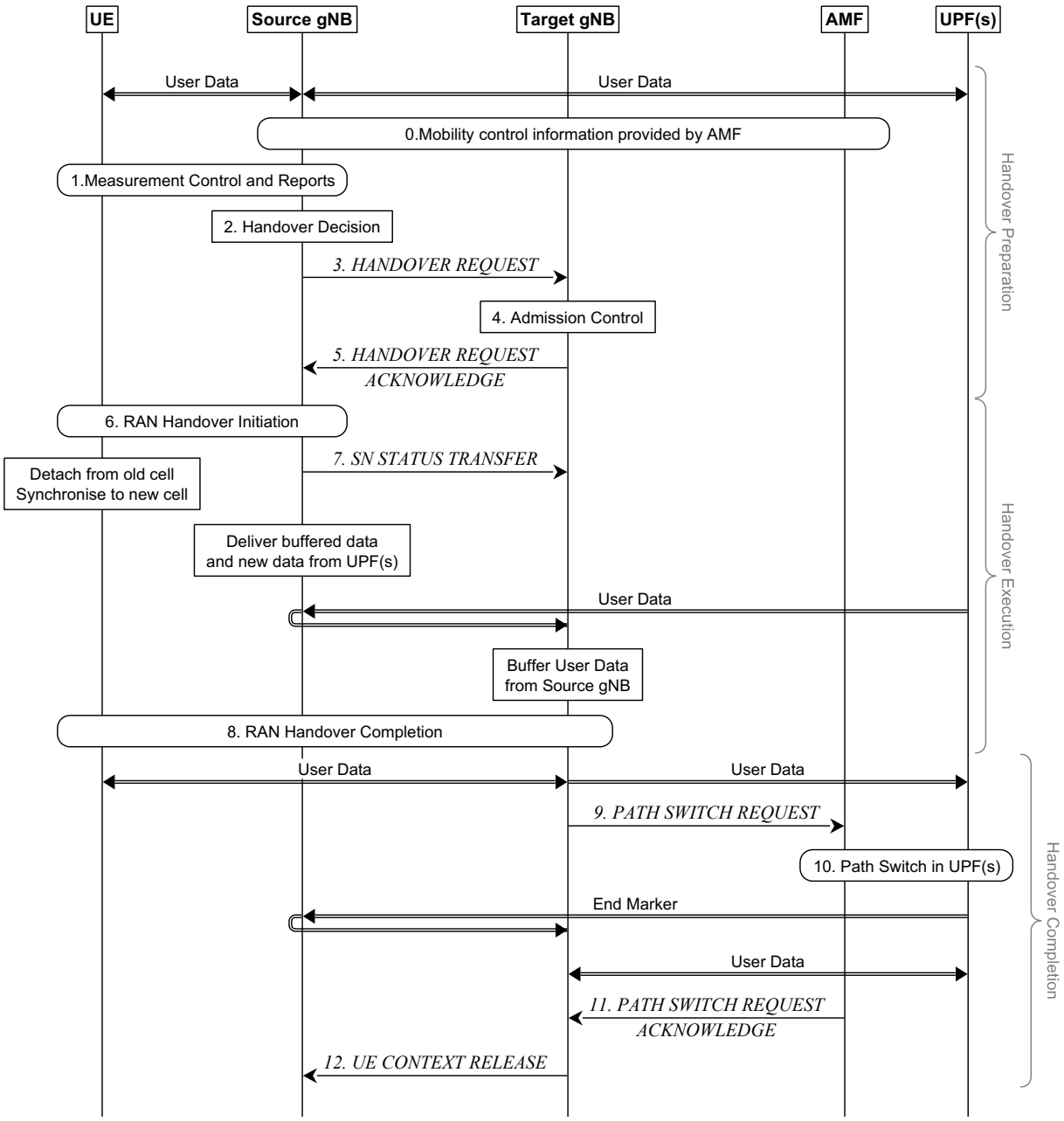

Figure 9.2.3.2.1-1: Intra-AMF/UPF Handover

0. The UE context within the source gNB contains information regarding roaming and access restrictions which were provided either at connection establishment or at the last TA update.

1. The source gNB configures the UE measurement procedures and the UE reports according to the measurement configuration.

2. The source gNB decides to handover the UE, based on *MeasurementReport* and RRM information.

3. The source gNB issues a Handover Request message to the target gNB passing a transparent RRC container with necessary information to prepare the handover at the target side. The information includes at least the target cell ID, KgNB*, the C-RNTI of the UE in the source gNB, RRM-configuration including UE inactive time, basic AS-configuration including *antenna Info and DL Carrier Frequency*, the current QoS flow to DRB mapping rules applied to the UE, the SIB1 from source gNB, the UE capabilities for different RATs, PDU session related information, and can include the UE reported measurement information including beam-related information if available. The PDU session related information includes the slice information (if supported) and QoS flow level QoS profile(s).

Samsung Exhibit 1011, Page 49 of 97

NOTE: After issuing a Handover Request, the source gNB should not reconfigure the UE, including performing Reflective QoS flow to DRB mapping.

4. Admission Control may be performed by the target gNB. Slice-aware admission control shall be performed if the slice information is sent to the target gNB. If the PDU sessions are associated with non-supported slices the target gNB shall reject such PDU Sessions.

5. The target gNB prepares the handover with L1/L2 and sends the HANDOVER REQUEST ACKNOWLEDGE to the source gNB, which includes a transparent container to be sent to the UE as an RRC message to perform the handover.

6. The source gNB triggers the Uu handover by sending an *RRCReconfiguration* message to the UE, containing the information required to access the target cell: at least the target cell ID, the new C-RNTI, the target gNB security algorithm identifiers for the selected security algorithms. It can also include a set of dedicated RACH resources, the association between RACH resources and SSB(s), the association between RACH resources and UE-specific CSI-RS configuration(s), common RACH resources, and system information of the target cell, etc.

7. The source gNB sends the SN STATUS TRANSFER message to the target gNB.

8. The UE synchronises to the target cell and completes the RRC handover procedure by sending *RRCReconfigurationComplete* message to target gNB.

9. The target gNB sends a PATH SWITCH REQUEST message to AMF to trigger 5GC to switch the DL data path towards the target gNB and to establish an NG-C interface instance towards the target gNB.

10. 5GC switches the DL data path towards the target gNB. The UPF sends one or more "end marker" packets on the old path to the source gNB per PDU session/tunnel and then can release any U-plane/TNL resources towards the source gNB.

11. The AMF confirms the PATH SWITCH REQUEST message with the PATH SWITCH REQUEST ACKNOWLEDGE message.

12. Upon reception of the PATH SWITCH REQUEST ACKNOWLEDGE message from the AMF, the target gNB sends the UE CONTEXT RELEASE to inform the source gNB about the success of the handover. The source gNB can then release radio and C-plane related resources associated to the UE context. Any ongoing data forwarding may continue.

The RRM configuration can include both beam measurement information (for layer 3 mobility) associated to SSB(s) and CSI-RS(s) for the reported cell(s) if both types of measurements are available. Also, if CA is configured, the RRM configuration can include the list of best cells on each frequency for which measurement information is available. And the RRM measurement information can also include the beam measurement for the listed cells that belong to the target gNB.

The common RACH configuration for beams in the target cell is only associated to the SSB(s). The network can have dedicated RACH configurations associated to the SSB(s) and/or have dedicated RACH configurations associated to CSI-RS(s) within a cell. The target gNB can only include one of the following RACH configurations in the Handover Command to enable the UE to access the target cell:

i) Common RACH configuration;

ii) Common RACH configuration + Dedicated RACH configuration associated with SSB;

iii) Common RACH configuration + Dedicated RACH configuration associated with CSI-RS.

The dedicated RACH configuration allocates RACH resource(s) together with a quality threshold to use them. When dedicated RACH resources are provided, they are prioritized by the UE and the UE shall not switch to contention-based RACH resources as long as the quality threshold of those dedicated resources is met. The order to access the dedicated RACH resources is up to UE implementation.

9.2.3.2.2 U-Plane Handling

The U-plane handling during the Intra-NR-Access mobility activity for UEs in RRC_CONNECTED takes the following principles into account to avoid data loss during HO:

- During HO preparation, U-plane tunnels can be established between the source gNB and the target gNB;

Samsung Exhibit 1011, Page 50 of 97

- During HO execution, user data can be forwarded from the source gNB to the target gNB;
  - Forwarding should take place in order as long as packets are received at the source gNB from the UPF or the source gNB buffer has not been emptied.
- During HO completion:
  - The target gNB sends a path switch request message to the AMF to inform that the UE has gained access and the AMF then triggers path switch related 5GC internal signalling and actual path switch of the source gNB to the target gNB in UPF;
  - The source gNB should continue forwarding data as long as packets are received at the source gNB from the UPF or the source gNB buffer has not been emptied.

For RLC-AM bearers:

- For in-sequence delivery and duplication avoidance, PDCP SN is maintained on a per DRB basis and the source gNB informs the target gNB about the next DL PDCP SN to allocate to a packet which does not have a PDCP sequence number yet (either from source gNB or from the UPF).
- For security synchronisation, HFN is also maintained and the source gNB provides to the target one reference HFN for the UL and one for the DL i.e. HFN and corresponding SN.
- In both the UE and the target gNB, a window-based mechanism is used for duplication detection and reordering.
- The occurrence of duplicates over the air interface in the target gNB is minimised by means of PDCP SN based reporting at the target gNB by the UE. In uplink, the reporting is optionally configured on a per DRB basis by the gNB and the UE should first start by transmitting those reports when granted resources are in the target gNB. In downlink, the gNB is free to decide when and for which bearers a report is sent and the UE does not wait for the report to resume uplink transmission.
- The target gNB re-transmits and prioritizes all downlink data forwarded by the source gNB (i.e. the target gNB should first send all forwarded PDCP SDUs with PDCP SNs, then all forwarded downlink PDCP SDUs without SNs before sending new data from 5GC), excluding PDCP SDUs for which the reception was acknowledged through PDCP SN based reporting by the UE.

NOTE: Lossless delivery when a QoS flow is mapped to a different DRB at handover, requires the old DRB to be configured in the target cell. For in-order delivery in the DL, the target gNB should first transmit the forwarded PDCP SDUs on the old DRB before transmitting new data from 5GCN on the new DRB. In the UL, the target gNB should not deliver data of the QoS flow from the new DRB to 5GCN before receiving the end marker on the old DRB from the UE.

- The UE re-transmits in the target gNB all uplink PDCP SDUs starting from the oldest PDCP SDU that has not been acknowledged at RLC in the source, excluding PDCP SDUs for which the reception was acknowledged through PDCP SN based reporting by the target.

For RLC-UM bearers:

- The PDCP SN and HFN are reset in the target gNB;
- No PDCP SDUs are retransmitted in the target gNB;
- The target gNB prioritises all downlink SDAP SDUs forwarded by the source gNB over the data from the core network;

NOTE: To minimise losses when a QoS flow is mapped to a different DRB at handover, the old DRB needs to be configured in the target cell. For in-order delivery in the DL, the target gNB should first transmit the forwarded PDCP SDUs on the old DRB before transmitting new data from 5GCN on the new DRB. In the UL, the target gNB should not deliver data of the QoS flow from the new DRB to 5GCN before receiving the end marker on the old DRB from the UE.

- The UE does not retransmit any PDCP SDU in the target cell for which transmission had been completed in the source cell.

Samsung Exhibit 1011, Page 51 of 97

9.2.3.2.3 Data Forwarding

The following description depicts the data forwarding principles for intra-system handover.

The source NG-RAN node may suggest downlink data forwarding per QoS flow established for a PDU session and may provide information how it maps QoS flows to DRBs. The target NG-RAN node decides data forwarding per QoS flow established for a PDU Session.

If "lossless handover" is required and the QoS flows to DRB mapping applied at the target NG-RAN node allows applying for data forwarding the same QoS flows to DRB mapping as applied at the source NG-RAN node for a DRB and if all QoS flows mapped to that DRB are accepted for data forwarding, the target NG-RAN node establishes a downlink forwarding tunnel for that DRB.

For a DRB for which preservation of SN status applies, the target NG-RAN node may decide to establish an UL data forwarding tunnel.

The target NG-RAN node may also decide to establish a downlink forwarding tunnel for each PDU session. In this case the target NG-RAN node provides information for which QoS flows data forwarding has been accepted and corresponding UP TNL information for data forwarding tunnels to be established between the source NG-RAN node and the target NG-RAN node.

As long as data forwarding of DL user data packets takes place, the source NG-RAN node shall forward user data in the same forwarding tunnel, i.e.

- for any QoS flow accepted for data forwarding by the target NG-RAN node and for which a DRB DL forwarding tunnel was established for a DRB to which this QoS flow was mapped at the source NG-RAN node, any fresh packets of this QoS flow shall be forwarded as PDCP SDUs via the mapped DRB DL forwarding tunnel.

- for DRBs for which preservation of SN status applies, the source NG-RAN node may forward in order to the target NG-RAN node via the DRB DL forwarding tunnel all downlink PDCP SDUs with their SN corresponding to PDCP PDUs which have not been acknowledged by the UE.

NOTE: The SN of forwarded PDCP SDUs is carried in the "PDCP PDU number" field of the GTP-U extension header.

- for any QoS flow accepted for data forwarding by the target NG-RAN node for which a DL PDU session forwarding tunnel was established, the source NG-RAN node forwards SDAP SDUs as received on NG-U from the UPF.

As long as data forwarding of UL user data packets takes place for DRBs for which preservation of SN status applies the source NG-RAN node either:

- discards the uplink PDCP PDUs received out of sequence if the source NG-RAN node has not accepted the request from the target NG-RAN node for uplink forwarding or if the target NG-RAN node has not requested uplink forwarding for the bearer during the Handover Preparation procedure; or

- forwards to the target NG-RAN node the uplink PDCP SDUs with their SN corresponding to PDCP PDUs received out of sequence if the source NG-RAN node has accepted the request from the target NG-RAN node for uplink forwarding for the bearer during the Handover Preparation procedure.

<u>Handling of end marker packets</u>:

- The source NG-RAN node receives one or several GTP-U end marker packets per PDU session from the UPF and replicates the end marker packets into each data forwarding tunnel when no more user data packets are to be forwarded over that tunnel.

- End marker packets sent via a data forwarding tunnel are applicable to all QoS flows forwarded via that tunnel. After end marker packets have been received over a forwarding tunnel, the target NG-RAN node can start taking into account the packets of QoS flows associated with that forwarding tunnel received at the target NG-RAN node from the NG-U PDU session tunnel.

Samsung Exhibit 1011, Page 52 of 97

9.2.3.3 Re-establishment procedure

A UE in RRC_CONNECTED may initiate the re-establishment procedure to continue the RRC connection when a failure condition occurs (e.g. radio link failure, reconfiguration failure, integrity check failure…).

The following figure describes the re-establishment procedure started by the UE:

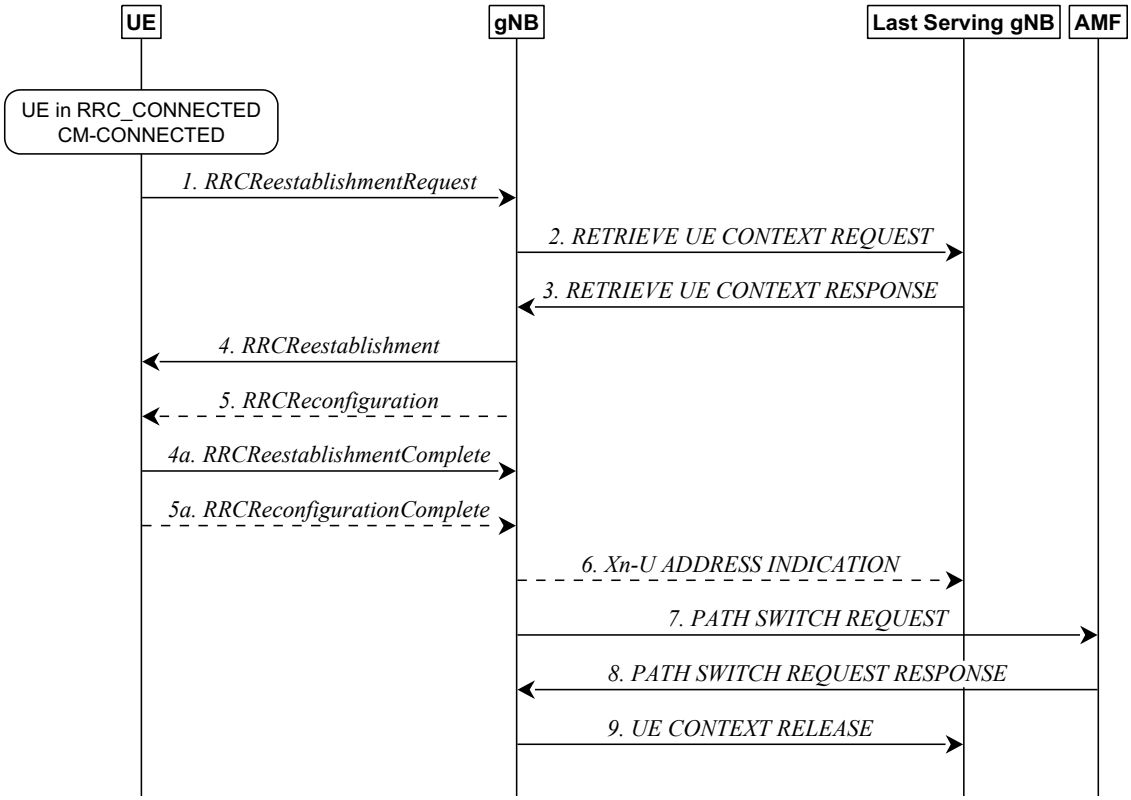

Figure 9.2.3.3-1: Re-establishment procedure

1. The UE re-establishes the connection, providing the UE Identity (PCI+C-RNTI) to the gNB where the trigger for the re-establishment occurred.

2. If the UE Context is not locally available, the gNB, requests the last serving gNB to provide UE Context data.

3. The last serving gNB provides UE context data.

4/4a. The gNB continues the re-establishment of the RRC connection. The message is sent on SRB1.

5/5a. The gNB may perform the reconfiguration to re-establish SRB2 and DRBs when the re-establishment procedure is ongoing.

6. If loss of DL user data buffered in the last serving gNB shall be prevented, the gNB provides forwarding addresses.

7/8. The gNB performs path switch.

9. The gNB triggers the release of the UE resources at the last serving gNB.

9.2.4 Measurements

In RRC_CONNECTED, the UE measures multiple beams (at least one) of a cell and the measurements results (power values) are averaged to derive the cell quality. In doing so, the UE is configured to consider a subset of the detected beams. Filtering takes place at two different levels: at the physical layer to derive beam quality and then at RRC level to derive cell quality from multiple beams. Cell quality from beam measurements is derived in the same way for the serving cell(s) and for the non-serving cell(s). Measurement reports may contain the measurement results of the *X* best beams if the UE is configured to do so by the gNB.

Samsung Exhibit 1011, Page 53 of 97

The corresponding high-level measurement model is described below:

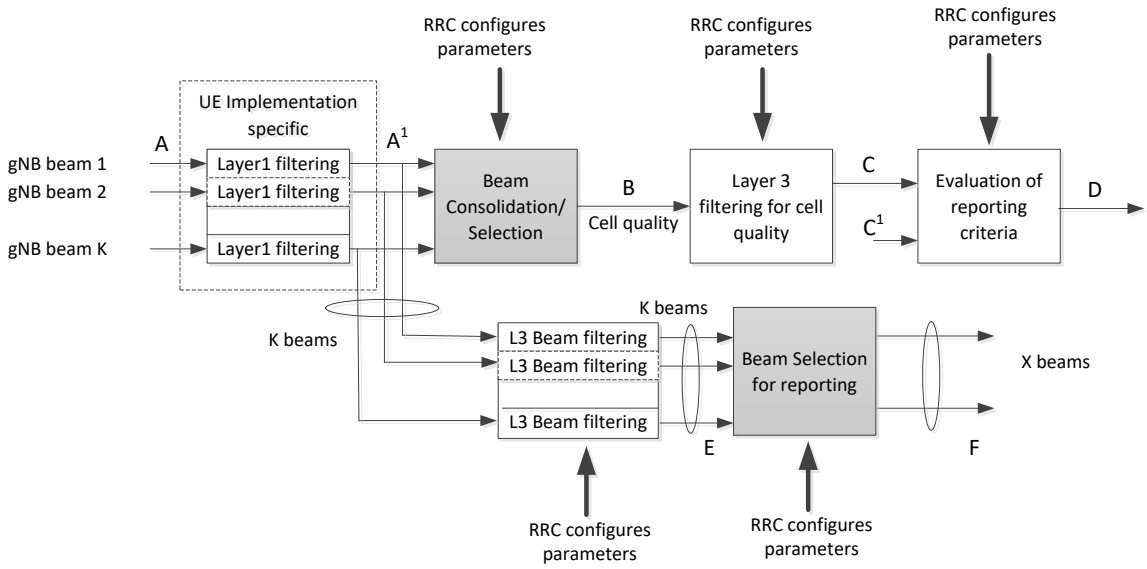

Figure 9.2.4-1: Measurement Model

NOTE: K beams correspond to the measurements on SSB or CSI-RS resources configured for L3 mobility by gNB and detected by UE at L1.

- **A**: measurements (beam specific samples) internal to the physical layer.
- **Layer 1 filtering**: internal layer 1 filtering of the inputs measured at point A. Exact filtering is implementation dependent. How the measurements are actually executed in the physical layer by an implementation (inputs A and Layer 1 filtering) in not constrained by the standard.
- **A^1**: measurements (i.e. beam specific measurements) reported by layer 1 to layer 3 after layer 1 filtering.
- **Beam Consolidation/Selection**: beam specific measurements are consolidated to derive cell quality. The behaviour of the Beam consolidation/selection is standardised and the configuration of this module is provided by RRC signalling. Reporting period at B equals one measurement period at A^1.
- **B**: a measurement (i.e. cell quality) derived from beam-specific measurements reported to layer 3 after beam consolidation/selection.
- **Layer 3 filtering for cell quality**: filtering performed on the measurements provided at point B. The behaviour of the Layer 3 filters is standardised and the configuration of the layer 3 filters is provided by RRC signalling. Filtering reporting period at C equals one measurement period at B.
- **C**: a measurement after processing in the layer 3 filter. The reporting rate is identical to the reporting rate at point B. This measurement is used as input for one or more evaluation of reporting criteria.
- **Evaluation of reporting criteria**: checks whether actual measurement reporting is necessary at point D. The evaluation can be based on more than one flow of measurements at reference point C e.g. to compare between different measurements. This is illustrated by input C and C^1. The UE shall evaluate the reporting criteria at least every time a new measurement result is reported at point C, C^1. The reporting criteria are standardised and the configuration is provided by RRC signalling (UE measurements).
- **D**: measurement report information (message) sent on the radio interface.
- **L3 Beam filtering**: filtering performed on the measurements (i.e. beam specific measurements) provided at point A^1. The behaviour of the beam filters is standardised and the configuration of the beam filters is provided by RRC signalling. Filtering reporting period at E equals one measurement period at A^1.
- **E**: a measurement (i.e. beam-specific measurement) after processing in the beam filter. The reporting rate is identical to the reporting rate at point A^1. This measurement is used as input for selecting the X measurements to be reported.

Samsung Exhibit 1011, Page 54 of 97

- **Beam Selection for beam reporting**: selects the X measurements from the measurements provided at point E. The behaviour of the beam selection is standardised and the configuration of this module is provided by RRC signalling.

- **F**: beam measurement information included in measurement report (sent) on the radio interface.

Layer 1 filtering introduces a certain level of measurement averaging. How and when the UE exactly performs the required measurements is implementation specific to the point that the output at B fulfils the performance requirements set in TS 38.133 [13]. Layer 3 filtering for cell quality and related parameters used are specified in TS 38.331 [12] and do not introduce any delay in the sample availability between B and C. Measurement at point C, C^1 is the input used in the event evaluation. L3 Beam filtering and related parameters used are specified in TS 38.331 [12] and do not introduce any delay in the sample availability between E and F.

Measurement reports are characterized by the following:

- Measurement reports include the measurement identity of the associated measurement configuration that triggered the reporting;

- Cell and beam measurement quantities to be included in measurement reports are configured by the network;

- The number of non-serving cells to be reported can be limited through configuration by the network;

- Cells belonging to a blacklist configured by the network are not used in event evaluation and reporting, and conversely when a whitelist is configured by the network, only the cells belonging to the whitelist are used in event evaluation and reporting;

- Beam measurements to be included in measurement reports are configured by the network (beam identifier only, measurement result and beam identifier, or no beam reporting).

Intra-frequency neighbour (cell) measurements and inter-frequency neighbour (cell) measurements are defined as follows:

- SSB based intra-frequency measurement: a measurement is defined as an SSB based intra-frequency measurement provided the center frequency of the SSB of the serving cell and the center frequency of the SSB of the neighbour cell are the same, and the subcarrier spacing of the two SSBs is also the same.

- SSB based inter-frequency measurement: a measurement is defined as an SSB based inter-frequency measurement provided the center frequency of the SSB of the serving cell and the center frequency of the SSB of the neighbour cell are different, or the subcarrier spacing of the two SSBs is different.

NOTE: for SSB based measurements, one measurement object corresponds to one SSB and the UE considers different SSBs as different cells.

- CSI-RS based intra-frequency measurement: a measurement is defined as a CSI-RS based intra-frequency measurement provided the bandwidth of the CSI-RS resource on the neighbour cell configured for measurement is within the bandwidth of the CSI-RS resource on the serving cell configured for measurement, and the subcarrier spacing of the two CSI-RS resources is the same.

- CSI-RS based inter-frequency measurement: a measurement is defined as a CSI-RS based inter-frequency measurement provided the bandwidth of the CSI-RS resource on the neighbour cell configured for measurement is not within the bandwidth of the CSI-RS resource on the serving cell configured for measurement, or the subcarrier spacing of the two CSI-RS resources is different.

Whether a measurement is non-gap-assisted or gap-assisted depends on the capability of the UE, the active BWP of the UE and the current operating frequency:

- For SSB based inter-frequency, a measurement gap configuration is always provided in the following cases:

  - If the UE only supports per-UE measurement gaps;

  - If the UE supports per-FR measurement gaps and any of the configured BWP frequencies of any of the serving cells are in the same frequency range of the measurement object.

- For SSB based intra-frequency measurement, a measurement gap configuration is always provided in the following case:

Samsung Exhibit 1011, Page 55 of 97

- Other than the initial BWP, if any of the UE configured BWPs do not contain the frequency domain resources of the SSB associated to the initial DL BWP.

In non-gap-assisted scenarios, the UE shall be able to carry out such measurements without measurement gaps. In gap-assisted scenarios, the UE cannot be assumed to be able to carry out such measurements without measurement gaps.

9.2.5 Paging

Paging allows the network to reach UEs in RRC_IDLE and in RRC_INACTIVE state through *Paging* messages, and to notify UEs in RRC_IDLE, RRC_INACTIVE and RRC_CONNECTED state of system information change (see subclause 7.3.3) and ETWS/CMAS indications (see subclause 16.4) through *Short Messages*. Both *Paging* messages and *Short Messages* are addressed with P-RNTI on PDCCH, but while the former is sent on PCCH, the latter is sent over PDCCH directly (see subclause 6.5 of TS 38.331 [12]).

While in RRC_IDLE the UE monitors the paging channels for CN-initiated paging; in RRC_INACTIVE the UE also monitors paging channels for RAN-initiated paging. A UE need not monitor paging channels continuously though; Paging DRX is defined where the UE in RRC_IDLE or RRC_INACTIVE is only required to monitor paging channels during one Paging Occasions (PO) per DRX cycle (see TS 38.304 [10]). The Paging DRX cycles are configured by the network:

1) For CN-initiated paging, a default cycle is broadcast in system information;

2) For CN-initiated paging, a UE specific cycle can be configured via NAS signalling;

3) For RAN-initiated paging, a UE-specific cycle is configured via RRC signalling;

- The UE uses the shortest of the DRX cycles applicable i.e. a UE in RRC_IDLE uses the shortest of the first two cycles above, while a UE in RRC_INACTIVE uses the shortest of the three.

The POs of a UE for CN-initiated and RAN-initiated paging are based on the same UE ID, resulting in overlapping POs for both. The number of different POs in a DRX cycle is configurable via system information and a network may distribute UEs to those POs based on their IDs.

When in RRC_CONNECTED, the UE monitors the paging channels in any PO signalled in system information for SI change indication and PWS notification. In case of BA, a UE in RRC_CONNECTED only monitors paging channels on the active BWP with common search space configured.

Paging optimization for UEs in CM_IDLE: at UE context release, the NG-RAN node may provide the AMF with a list of recommended cells and NG-RAN nodes as assistance info for subsequent paging. The AMF may also provide Paging Attempt Information consisting of a Paging Attempt Count and the Intended Number of Paging Attempts and may include the Next Paging Area Scope. If Paging Attempt Information is included in the Paging message, each paged NG-RAN node receives the same information during a paging attempt. The Paging Attempt Count shall be increased by one at each new paging attempt. The Next Paging Area Scope, when present, indicates whether the AMF plans to modify the paging area currently selected at next paging attempt. If the UE has changed its state to CM CONNECTED the Paging Attempt Count is reset.

Paging optimization for UEs in RRC_INACTIVE: at RAN Paging, the serving NG-RAN node provides RAN Paging area information. The serving NG-RAN node may also provide RAN Paging attempt information. Each paged NG-RAN node receives the same RAN Paging attempt information during a paging attempt with the following content: Paging Attempt Count, the intended number of paging attempts and the Next Paging Area Scope. The Paging Attempt Count shall be increased by one at each new paging attempt. The Next Paging Area Scope, when present, indicates whether the serving NG_RAN node plans to modify the RAN Paging Area currently selected at next paging attempt. If the UE leaves RRC_INACTIVE state the Paging Attempt Count is reset.

9.2.6 Random Access Procedure

The random access procedure is triggered by a number of events:

- Initial access from RRC_IDLE;

- RRC Connection Re-establishment procedure;

- DL or UL data arrival during RRC_CONNECTED when UL synchronisation status is "non-synchronised";

Samsung Exhibit 1011, Page 56 of 97

- UL data arrival during RRC_CONNECTED when there are no PUCCH resources for SR available;
- SR failure;
- Request by RRC upon synchronous reconfiguration (e.g. handover);
- Transition from RRC_INACTIVE;
- To establish time alignment at SCell addition;
- Request for Other SI (see subclause 7.3);
- Beam failure recovery.

Furthermore, the random access procedure takes two distinct forms: contention-based random access (CBRA) and contention-free random access (CFRA) as shown on Figure 9.2.6-1 below.

For random access in a cell configured with SUL, the network can explicitly signal which carrier to use (UL or SUL). Otherwise, the UE selects the SUL carrier if and only if the measured quality of the DL is lower than a broadcast threshold. Once started, all uplink transmissions of the random access procedure remain on the selected carrier.

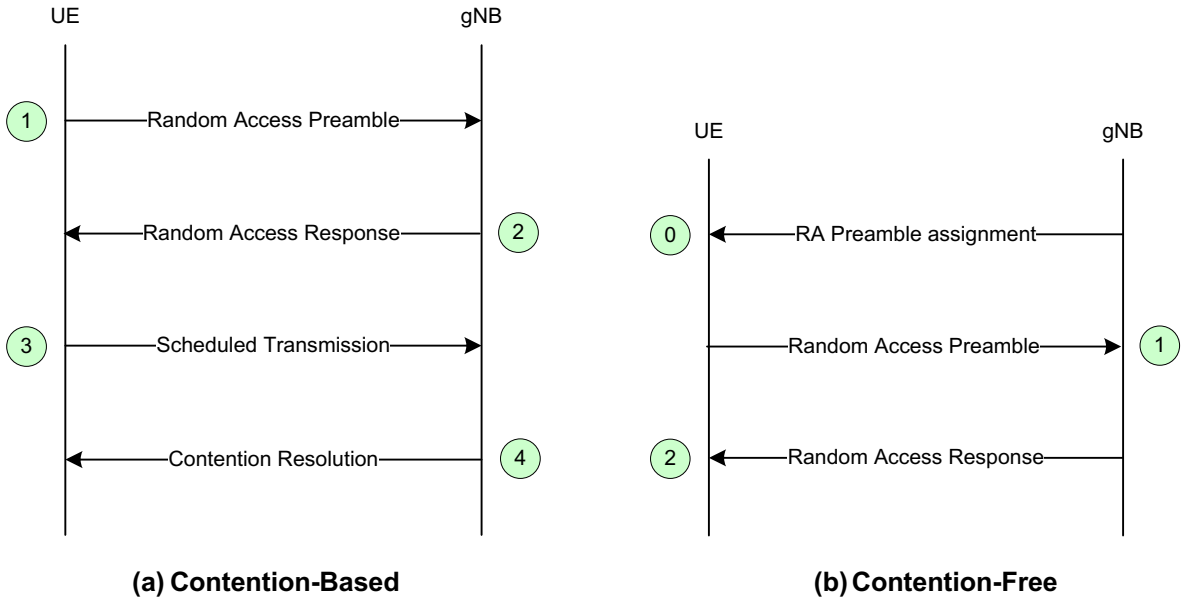

Figure 9.2.6-1: Random Access Procedures

9.2.7 Radio Link Failure

In RRC_CONNECTED, the UE performs Radio Link Monitoring (RLM) in the active BWP based on reference signals (SSB/CSI-RS) and signal quality thresholds configured by the network. SSB-based RLM is based on the SSB associated to the initial DL BWP and can only be configured for the initial DL BWP and for DL BWPs containing the SSB associated to the initial DL BWP. For other DL BWPs, RLM can only be performed based on CSI-RS.

The UE declares Radio Link Failure (RLF) when one of the following criteria are met:

- Expiry of a timer started after indication of radio problems from the physical layer (if radio problems are recovered before the timer is expired, the UE stops the timer); or
- Random access procedure failure; or
- RLC failure.

After RLF is declared, the UE:

- stays in RRC_CONNECTED;

Samsung Exhibit 1011, Page 57 of 97

- selects a suitable cell and then initiates RRC re-establishment;
- enters RRC_IDLE if a suitable cell was not found within a certain time after RLF was declared.

9.2.8 Beam failure detection and recovery

For beam failure detection, the gNB configures the UE with beam failure detection reference signals (SSB or CSI-RS) and the UE declares beam failure when the number of beam failure instance indications from the physical layer reaches a configured threshold before a configured timer expires.

SSB-based Beam Failure Detection is based on the SSB associated to the initial DL BWP and can only be configured for the initial DL BWPs and for DL BWPs containing the SSB associated to the initial DL BWP. For other DL BWPs, Beam Failure Detection can only be performed based on CSI-RS.

After beam failure is detected, the UE:

- triggers beam failure recovery by initiating a Random Access procedure on the PCell;
- selects a suitable beam to perform beam failure recovery (if the gNB has provided dedicated Random Access resources for certain beams, those will be prioritized by the UE).

Upon completion of the Random Access procedure, beam failure recovery is considered complete.

9.3 Inter RAT

9.3.1 Intra 5GC

9.3.1.1 Cell Reselection

Cell reselection is characterised by the following:

- Cell reselection between NR RRC_IDLE and E-UTRA RRC_IDLE is supported;
- Cell reselection from NR RRC_INACTIVE to E-UTRA RRC_IDLE is supported.

9.3.1.2 Handover

Inter RAT mobility is characterised by the following:

- The Source RAT configures Target RAT measurement and reporting.
- The source RAT decides on the preparation initiation and provides the necessary information to the target RAT in the format required by the target RAT:
  - For handover preparation from E-UTRA to NR, the source RAT issues a handover preparation request message to the target RAT passing a transparent RRC container with necessary information to prepare the handover at the target side. The information for the target RAT is the same type as specified in section 9.2.3.2.1 including the current QoS flow to DRB mapping applied to the UE and RRM configuration.
  - The details of RRM configuration are the same type as specified for NR in section 9.2.3.2.1 including beam measurement information for the listed cells if the measurements are available.
- Radio resources are prepared in the target RAT before the handover.
- The RRC reconfiguration message from the target RAT is delivered to the source RAT via a transparent container, and is passed to the UE by the source RAT in the handover command:
  - The inter-RAT handover command message carries the same type of information required to access the target cell as specified for NR baseline handover in section 9.2.3.2.1.
- The in-sequence and lossless handover is supported for the handover between gNB and ng-eNB.

Samsung Exhibit 1011, Page 58 of 97

- Both Xn and NG based inter-RAT handover between NG-RAN nodes is supported. Whether the handover is over Xn or CN is transparent to the UE.
- In order to keep the SDAP and PDCP configurations for in-sequence and lossless inter-RAT handover, delta-configuration for the radio bearer configuration is used.

9.3.1.3 Measurements

Inter RAT measurements in NR are limited to E-UTRA.

9.3.2 From 5GC to EPC

9.3.2.1 Cell Reselection

Cell reselection is characterised by the following:

- Cell reselection between NR RRC_IDLE and E-UTRA RRC_IDLE is supported;
- Cell reselection from NR RRC_INACTIVE to E-UTRA RRC_IDLE is supported.

9.3.2.2 Handover and redirection

The source NG-RAN node decides between handover or redirection to EPS based on radio criteria and availability of the N26 interface.

NOTE: Information about the availability of the N26 interface may be configured by OAM at the NG-RAN.

Inter RAT handover is characterised by the following:

- The Source RAT configures Target RAT measurement and reporting.
- The source RAT decides on the preparation initiation and provides the necessary information to the target RAT in the format required by the target RAT.
- Radio resources are prepared in the target RAT before the handover.
- The RRC reconfiguration message from the target RAT is delivered to the source RAT via a transparent container, and is passed to the UE by the source RAT in the handover command.
- In-sequence and lossless handovers are not supported.
- A full configuration is required to reset the radio bearers.
- Security procedures for handover to E-UTRA/EPC should follow legacy inter-RAT handover procedures.

9.3.2.3 Measurements

Inter RAT measurements in NR are limited to E-UTRA.

9.3.2.4 Data Forwarding for the Control Plane

Control plane handling for inter-System data forwarding from 5GS to EPS follows the following key principles:

- PDU session information at the serving NG-RAN node contains mapping information per QoS Flow to a corresponding E-RAB.
- At handover preparation, the source NG-RAN node shall decide which mapped E-RABs are proposed to be subject to data forwarding and provide this information in the source-to-target container to the target eNB.
- The target eNB assigns forwarding TEID/TNL address(es) for the E-RAB(s) for which it accepts data forwarding.

Samsung Exhibit 1011, Page 59 of 97

- A single data forwarding tunnel is established between the source NG-RAN node and UPF per PDU session for which at least data for a single QoS Flow is subject to data forwarding.

9.3.2.5 Data Forwarding for the User Plane

User plane handling for inter-System data forwarding from 5GS to EPS follows the following key principles:

- For the QoS flows accepted for data forwarding, the NG-RAN node initiates data forwarding to the UPF by the corresponding PDU session data forwarding tunnel(s).

- The UPF maps forwarded data received from the per PDU session data forwarding tunnel(s) to the mapped EPS bearer(s) removing the QFI.

Handling of end marker packets:

The source NG-RAN node receives one or several end marker packets per PDU session from the UPF. When there are no more data packets to be forwarded for QoS flows mapped to an E-RAB, the source NG-RAN node sends one or several end markers including one QFI of those QoS flows mapped to that E-RAB and sends the end marker packets to the UPF over the PDU session tunnel. From the included QFI in the end markers and its mapping to an EPS bearer ID, the UPF knows which EPS bearer tunnel it needs to forward the end-markers to the SGW. The QFI is removed in the end marker packets sent to the SGW.

9.3.3 From EPC to 5GC

9.3.3.1 Data Forwarding for the Control Plane

Control plane handling for inter-System data forwarding from EPS to 5GS follows the following key principles:

- The target NG-RAN node receives in the Handover Request message the mapping between E-RAB ID(s) and QoS Flow ID(s). It decides whether to accept the data forwarding for E-RAB IDs proposed for forwarding within the Source NG-RAN Node to Target NG-RAN Node Transparent Container. It assigns a TEID/TNL address for each PDU session for which at least one QoS flow is involved in the accepted forwarding.

- The target NG-RAN node sends the Handover Request Acknowledge message in which it indicates the list of PDU sessions and QoS flows for which it has accepted the forwarding.

- A single data forwarding tunnel is established between the UPF and the target NG-RAN node per PDU session for which at least data for a single QoS Flow is subject to data forwarding.

- The source eNB receives in the Handover Command message the list of E-RAB IDs for which the target NG-RAN node has accepted data forwarding of corresponding PDU sessions and QoS flows.

9.3.3.2 Data Forwarding for the User Plane

User plane handling for inter-System data forwarding from EPS to 5GS follows the following key principles:

- For each E-RAB accepted for data forwarding, the source eNB forwards data to the SGW in the corresponding E-RAB tunnel and the SGW forwards the received data to the UPF in the E-RAB tunnel.

- The UPF maps the forwarded data received from an E-RAB tunnel to the corresponding mapped PDU session tunnel, adding a QFI value.

- The target NG-RAN node maps a forwarded packet to the corresponding DRB based on the received QFI value. It prioritizes the forwarded packets over the fresh packets for those QoS flows.

Handling of end marker packets:

The UPF/PGW-U sends one or several end marker packets to the SGW per EPS bearer. The SGW forwards the received end markers per EPS bearer to the source eNB. When there are no more data packets to be forwarded for an E-RAB, the source eNB forwards the received end markers in the EPS bearer tunnel to the SGW and the SGW forwards them to the UPF. The UPF adds one QFI among the QoS flows mapped to that E-RAB to the end markers and sends those end markers to the target NG-RAN node in the per PDU session tunnel. When the target NG-RAN node receives

Samsung Exhibit 1011, Page 60 of 97

an end marker with a QFI added, the target NG-RAN node starts to transmit the data packets of all QoS flows mapped to the corresponding E-RAB received from the core network towards the UE.

9.4 Roaming and Access Restrictions

The roaming and access restriction information for a UE includes information on restrictions to be applied for subsequent mobility action during CM-CONNECTED state. It may be provided by the AMF and also may be updated by the AMF later.

It includes the forbidden RAT, the forbidden area and the service area restrictions as specified in TS 23.501 [3]. It also includes serving PLMN and may include a list of equivalent PLMNs.

Upon receiving the roaming and access restriction information for a UE, if applicable, the gNB should use it to determine whether to apply restriction handling for subsequent mobility action, e.g., handover, redirection.

If the roaming and access restriction information is not available for a UE at the gNB, the gNB shall consider that there is no restriction for subsequent mobility actions.

Only if received over NG or Xn signalling, the roaming and access restriction information shall be propagated over Xn by the source gNB during Xn handover. If the Xn handover results in a change of serving PLMN (to an equivalent PLMN), the source gNB shall replace the serving PLMN with the identity of the target PLMN and move the serving PLMN to the equivalent PLMN list, before propagating the roaming and access restriction information.

10 Scheduling

10.1 Basic Scheduler Operation

In order to utilise radio resources efficiently, MAC in gNB includes dynamic resource schedulers that allocate physical layer resources for the downlink and the uplink. In this subclause, an overview of the scheduler is given in terms of scheduler operation, signalling of scheduler decisions, and measurements.

Scheduler Operation:

- Taking into account the UE buffer status and the QoS requirements of each UE and associated radio bearers, schedulers assign resources between UEs;
- Schedulers may assign resources taking account the radio conditions at the UE identified through measurements made at the gNB and/or reported by the UE;
- Schedulers assign radio resources in a unit of slot (e.g. one mini-slot, one slot, or multiple slots);
- Resource assignment consists of radio resources (resource blocks).

Signalling of Scheduler Decisions:

- UEs identify the resources by receiving a scheduling (resource assignment) channel.

Measurements to Support Scheduler Operation:

- Uplink buffer status reports (measuring the data that is buffered in the logical channel queues in the UE) are used to provide support for QoS-aware packet scheduling;
- Power headroom reports (measuring the difference between the nominal UE maximum transmit power and the estimated power for uplink transmission) are used to provide support for power aware packet scheduling.

10.2 Downlink Scheduling

In the downlink, the gNB can dynamically allocate resources to UEs via the C-RNTI on PDCCH(s). A UE always monitors the PDCCH(s) in order to find possible assignments when its downlink reception is enabled (activity governed by DRX when configured). When CA is configured, the same C-RNTI applies to all serving cells.

Samsung Exhibit 1011, Page 61 of 97

The gNB may pre-empt an ongoing PDSCH transmission to one UE with a latency-critical transmission to another UE. The gNB can configure UEs to monitor interrupted transmission indications using INT-RNTI on a PDCCH. If a UE receives the interrupted transmission indication, the UE may assume that no useful information to that UE was carried by the resource elements included in the indication, even if some of those resource elements were already scheduled to this UE.

In addition, with Semi-Persistent Scheduling (SPS), the gNB can allocate downlink resources for the initial HARQ transmissions to UEs: RRC defines the periodicity of the configured downlink assignments while PDCCH addressed to CS-RNTI can either signal and activate the configured downlink assignment, or deactivate it; i.e. a PDCCH addressed to CS-RNTI indicates that the downlink assignment can be implicitly reused according to the periodicity defined by RRC, until deactivated.

NOTE: when required, retransmissions are explicitly scheduled on PDCCH(s).

The dynamically allocated downlink reception overrides the configured downlink assignment in the same serving cell, if they overlap in time. Otherwise a downlink reception according to the configured downlink assignment is assumed, if activated.

When CA is configured, at most one configured downlink assignment can be signalled per serving cell. When BA is configured, at most one configured downlink assignment can be signalled per BWP. On each serving cell, there can be only one configured downlink assignment active at a time. Activation and deactivation of configured downlink assignments are independent among the serving cells.

10.3 Uplink Scheduling

In the uplink, the gNB can dynamically allocate resources to UEs via the C-RNTI on PDCCH(s). A UE always monitors the PDCCH(s) in order to find possible grants for uplink transmission when its downlink reception is enabled (activity governed by DRX when configured). When CA is configured, the same C-RNTI applies to all serving cells.

In addition, with Configured Grants, the gNB can allocate uplink resources for the initial HARQ transmissions to UEs. Two types of configured uplink grants are defined:

- With Type 1, RRC directly provides the configured uplink grant (including the periodicity).
- With Type 2, RRC defines the periodicity of the configured uplink grant while PDCCH addressed to CS-RNTI can either signal and activate the configured uplink grant, or deactivate it; i.e. a PDCCH addressed to CS-RNTI indicates that the uplink grant can be implicitly reused according to the periodicity defined by RRC, until deactivated.

The dynamically allocated uplink transmission overrides the configured uplink grant in the same serving cell, if they overlap in time. Otherwise an uplink transmission according to the configured uplink grant is assumed, if activated.

Retransmissions other than repetitions are explicitly allocated via PDCCH(s).

When CA is configured, at most one configured uplink grant can be signalled per serving cell. When BA is configured, at most one configured uplink grant can be signalled per BWP. On each serving cell, there can be only one configured uplink grant active at a time. A configured uplink grant for one serving cell can either be of Type 1 or Type 2. For Type 2, activation and deactivation of configured uplink grants are independent among the serving cells. When SUL is configured, a configured uplink grant can only be signalled for one of the 2 ULs of the cell.

10.4 Measurements to Support Scheduler Operation

Measurement reports are required to enable the scheduler to operate in both uplink and downlink. These include transport volume and measurements of a UEs radio environment.

Uplink buffer status reports (BSR) are needed to provide support for QoS-aware packet scheduling. In NR, uplink buffer status reports refer to the data that is buffered in for a group of logical channels (LCG) in the UE. Eight LCGs and two formats are used for reporting in uplink:

- A short format to report only one BSR (of one LCG);
- A flexible long format to report several BSRs (up to all eight LCGs).

Samsung Exhibit 1011, Page 62 of 97

Uplink buffer status reports are transmitted using MAC signalling. When a BSR is triggered (e.g. when new data arrives in the transmission buffers of the UE), a Scheduling Request (SR) can be transmitted by the UE (e.g. when no resources are available to transmit the BSR).

Power headroom reports (PHR) are needed to provide support for power-aware packet scheduling. In NR, three types of reporting are supported: a first one for PUSCH transmission, a second one for PUSCH and PUCCH transmission in an LTE Cell Group in EN-DC (see TS 37.340 [21]) and a third one for SRS transmission on SCells configured with SRS only. In case of CA, when no transmission takes place on an activated SCell, a reference power is used to provide a virtual report. Power headroom reports are transmitted using MAC signalling.

10.5 Rate Control

10.5.1 Downlink

In downlink, for GBR flows, the gNB guarantees the GFBR and ensures that the MFBR is not exceeded while for non-GBR flows, it ensures that the UE-AMBR is not exceeded (see subclause 12). When configured for a GBR flow, the gNB also ensures that the MDBV is not exceeded.

10.5.2 Uplink

The UE has an uplink rate control function which manages the sharing of uplink resources between logical channels. RRC controls the uplink rate control function by giving each logical channel a priority, a prioritised bit rate (PBR), and a buffer size duration (BSD). The values signalled need not be related to the ones signalled via NG to the gNB. In addition, mapping restrictions can be configured (see subclause 16.1.2).

The uplink rate control function ensures that the UE serves the logical channel(s) in the following sequence:

1. All relevant logical channels in decreasing priority order up to their PBR;
2. All relevant logical channels in decreasing priority order for the remaining resources assigned by the grant.

NOTE 1: In case the PBRs are all set to zero, the first step is skipped and the logical channels are served in strict priority order: the UE maximises the transmission of higher priority data.

NOTE 2: The mapping restrictions tell the UE which logical channels are relevant for the grant received. If no mapping restrictions are configured, all logical channels are considered.

NOTE 3: Through radio protocol configuration and scheduling, the gNB can guarantee the GFBR(s) and ensure that neither the MFBR(s) nor the UE-AMBR are exceeded in uplink (see subclause 12).

NOTE 4: The mapping restrictions allows the gNB to fulfil the MDBV requirements through scheduling at least for the case where logical channels are mapped to separate serving cells.

If more than one logical channel have the same priority, the UE shall serve them equally.

10.6 Activation/Deactivation Mechanism

To enable reasonable UE battery consumption when CA is configured, an activation/deactivation mechanism of Cells is supported. When an SCell is deactivated, the UE does not need to receive the corresponding PDCCH or PDSCH, cannot transmit in the corresponding uplink, nor is it required to perform CQI measurements. Conversely, when an SCell is active, the UE shall receive PDSCH and PDCCH (if the UE is configured to monitor PDCCH from this SCell) and is expected to be able to perform CQI measurements. NG-RAN ensures that while PUCCH SCell (a Secondary Cell configured with PUCCH) is deactivated, SCells of secondary PUCCH group (a group of SCells whose PUCCH signalling is associated with the PUCCH on the PUCCH SCell) should not be activated. NG-RAN ensures that SCells mapped to PUCCH SCell are deactivated before the PUCCH SCell is changed or removed.

When reconfiguring the set of serving cells:

- SCells added to the set are initially deactivated;

Samsung Exhibit 1011, Page 63 of 97

- SCells which remain in the set (either unchanged or reconfigured) do not change their activation status (*activated* or *deactivated*).

At handover:

- SCells are deactivated.

To enable reasonable UE battery consumption when BA is configured, only one UL BWP for each uplink carrier and one DL BWP or only one DL/UL BWP pair can be active at a time in an active serving cell, all other BWPs that the UE is configured with being deactivated. On deactivated BWPs, the UE does not monitor the PDCCH, does not transmit on PUCCH, PRACH and UL-SCH.

10.7 E-UTRA-NR Cell Resource Coordination

An NR cell may use spectrum that overlaps or is adjacent to spectrum in use for E-UTRA cells. In this case network signalling enables coordination of TDM and FDM cell resources between MAC in the gNB and the corresponding entity in the ng-eNB. Both the gNB and the ng-eNB can trigger the E-UTRA - NR Cell Resource Coordination procedure over Xn to its peer node.

11 UE Power Saving

The PDCCH monitoring activity of the UE in RRC connected mode is governed by DRX and BA.

When DRX is configured, the UE does not have to continuously monitor PDCCH. DRX is characterized by the following:

- **on-duration**: duration that the UE waits for, after waking up, to receive PDCCHs. If the UE successfully decodes a PDCCH, the UE stays awake and starts the inactivity timer;
- **inactivity-timer**: duration that the UE waits to successfully decode a PDCCH, from the last successful decoding of a PDCCH, failing which it can go back to sleep. The UE shall restart the inactivity timer following a single successful decoding of a PDCCH for a first transmission only (i.e. not for retransmissions);
- **retransmission-timer**: duration until a retransmission can be expected;
- **cycle**: specifies the periodic repetition of the on-duration followed by a possible period of inactivity (see figure 11-1 below);
- **active-time**: total duration that the UE monitors PDCCH. This includes the "on-duration" of the DRX cycle, the time UE is performing continuous reception while the inactivity timer has not expired, and the time when the UE is performing continuous reception while waiting for a retransmission opportunity.

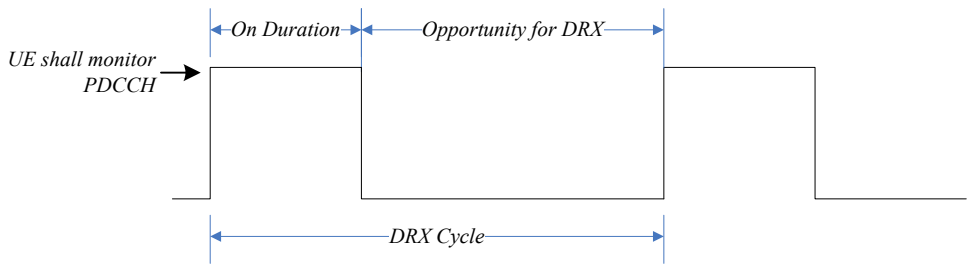

Figure 11-1: DRX Cycle

When BA is configured, the UE only has to monitor PDCCH on the one active BWP i.e. it does not have to monitor PDCCH on the entire DL frequency of the cell. A BWP inactivity timer (independent from the DRX inactivity-timer described above) is used to switch the active BWP to the default one: the timer is restarted upon successful PDCCH decoding and the switch to the default BWP takes place when it expires.

Samsung Exhibit 1011, Page 64 of 97

12 QoS

12.1 Overview

The **5G QoS model** is based on QoS Flows (see TS 23.501 [3]) and supports both QoS Flows that require guaranteed flow bit rate (GBR QoS Flows) and QoS Flows that do not require guaranteed flow bit rate (non-GBR QoS Flows). At NAS level (see TS 23.501 [3]), the QoS flow is thus the finest granularity of QoS differentiation in a PDU session. A QoS flow is identified within a PDU session by a QoS Flow ID (QFI) carried in an encapsulation header over NG-U.

The **QoS architecture** in NG-RAN, both for NR connected to 5GC and for E-UTRA connected to 5GC, is depicted in the Figure 12-1 and described in the following:

- For each UE, 5GC establishes one or more PDU Sessions;
- For each UE, the NG-RAN establishes at least one Data Radio Bearers (DRB) together with the PDU Session and additional DRB(s) for QoS flow(s) of that PDU session can be subsequently configured (it is up to NG-RAN when to do so);
- The NG-RAN maps packets belonging to different PDU sessions to different DRBs;
- NAS level packet filters in the UE and in the 5GC associate UL and DL packets with QoS Flows;
- AS-level mapping rules in the UE and in the NG-RAN associate UL and DL QoS Flows with DRBs.

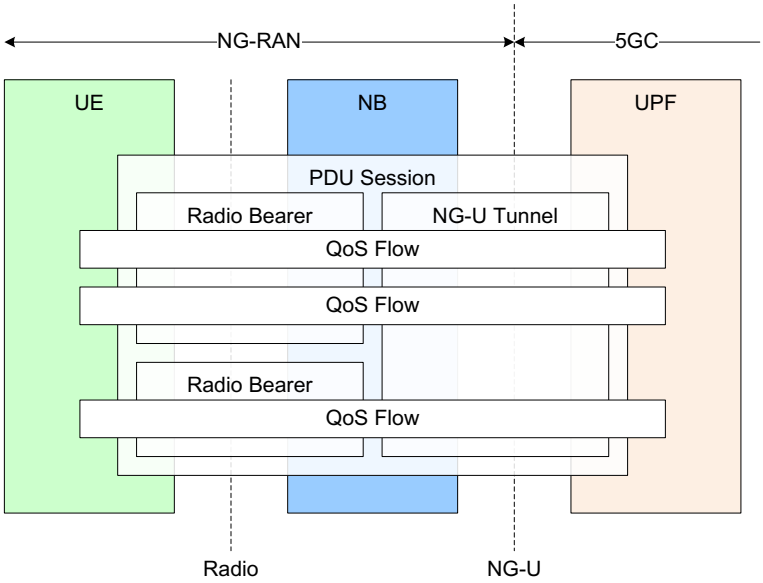

Figure 12-1: QoS architecture

NG-RAN and 5GC ensure quality of service (e.g. reliability and target delay) by mapping packets to appropriate QoS Flows and DRBs. Hence there is a 2-step mapping of IP-flows to QoS flows (NAS) and from QoS flows to DRBs (Access Stratum).

At **NAS level**, a QoS flow is characterised by a QoS profile provided by 5GC to NG-RAN and QoS rule(s) provided by 5GC to the UE. The QoS profile is used by NG-RAN to determine the treatment on the radio interface while the QoS rules dictates the mapping between uplink User Plane traffic and QoS flows to the UE. A QoS flow may either be GBR or Non-GBR depending on its profile. The QoS profile of a QoS flow contains QoS parameters, for instance (see TS 23.501 [3]):

- For each QoS flow:
  - A 5G QoS Identifier (5QI);
  - An Allocation and Retention Priority (ARP).

Samsung Exhibit 1011, Page 65 of 97

- In case of a GBR QoS flow only:
  - Guaranteed Flow Bit Rate (GFBR) for both uplink and downlink;
  - Maximum Flow Bit Rate (MFBR) for both uplink and downlink;
  - Maximum Packet Loss Rate for both uplink and downlink;
  - Delay Critical Resource Type;
  - Notification Control.

NOTE: the Maximum Packet Loss Rate (UL, DL) is only provided for a GBR QoS flow belonging to voice media.

- In case of Non-GBR QoS only:
  - Reflective QoS Attribute (RQA): the RQA, when included, indicates that some (not necessarily all) traffic carried on this QoS flow is subject to reflective quality of service (RQoS) at NAS;
  - Additional QoS Flow Information.

The QoS parameter Notification Control indicates whether notifications are requested from the RAN when the GFBR can no longer (or again) be fulfilled for a QoS Flow. If, for a given GBR QoS Flow, notification control is enabled and the RAN determines that the GFBR cannot be guaranteed, RAN shall send a notification towards SMF and keep the QoS Flow (i.e. while the NG-RAN is not delivering the requested GFBR for this QoS Flow), unless specific conditions at the NG-RAN require the release of the NG-RAN resources for this GBR QoS Flow, e.g. due to Radio link failure or RAN internal congestion. When applicable, NG-RAN sends a new notification, informing SMF that the GFBR can be guaranteed again.

In addition, an Aggregate Maximum Bit Rate is associated to each PDU session (Session-AMBR) and to each UE (UE-AMBR). The Session-AMBR limits the aggregate bit rate that can be expected to be provided across all Non-GBR QoS Flows for a specific PDU Session and is ensured by the UPF. The UE-AMBR limits the aggregate bit rate that can be expected to be provided across all Non-GBR QoS Flows of a UE and is ensured by the RAN (see subclause 10.5.1).

The 5QI is associated to QoS characteristics giving guidelines for setting node specific parameters for each QoS Flow. Standardized or pre-configured 5G QoS characteristics are derived from the 5QI value and are not explicitly signalled. Signalled QoS characteristics are included as part of the QoS profile. The QoS characteristics consist for instance of (see TS 23.501 [3]):

- Priority level;
- Packet Delay Budget;
- Packet Error Rate;
- Averaging window;
- Maximum Data Burst Volume.

At **Access Stratum** level, the data radio bearer (DRB) defines the packet treatment on the radio interface (Uu). A DRB serves packets with the same packet forwarding treatment. The QoS flow to DRB mapping by NG-RAN is based on QFI and the associated QoS profiles (i.e. QoS parameters and QoS characteristics). Separate DRBs may be established for QoS flows requiring different packet forwarding treatment, or several QoS Flows belonging to the same PDU session can be multiplexed in the same DRB.

In the uplink, the mapping of QoS Flows to DRBs is controlled by mapping rules which are signalled in two different ways:

- Reflective mapping: for each DRB, the UE monitors the QFI(s) of the downlink packets and applies the same mapping in the uplink; that is, for a DRB, the UE maps the uplink packets belonging to the QoS flows(s) corresponding to the QFI(s) and PDU Session observed in the downlink packets for that DRB. To enable this reflective mapping, the NG-RAN marks downlink packets over Uu with QFI.
- Explicit Configuration: QoS flow to DRB mapping rules can be explicitly signalled by RRC.

Samsung Exhibit 1011, Page 66 of 97

The UE always applies the latest update of the mapping rules regardless of whether it is performed via reflecting mapping or explicit configuration.

When a QoS flow to DRB mapping rule is updated, the UE sends an end marker on the old bearer.

In the downlink, the QFI is signalled by NG-RAN over Uu for the purpose of RQoS and if neither NG-RAN, nor the NAS (as indicated by the RQA) intend to use reflective mapping for the QoS flow(s) carried in a DRB, no QFI is signalled for that DRB over Uu. In the uplink, NG-RAN can configure the UE to signal QFI over Uu.

For each PDU session, a default DRB may be configured: if an incoming UL packet matches neither an RRC configured nor a reflective mapping rule, the UE then maps that packet to the default DRB of the PDU session. For non-GBR QoS flows, the 5GC may send to the NG-RAN the Additional QoS Flow Information parameter associated with certain QoS flows to indicate that traffic is likely to appear more often on them compared to other non-GBR QoS flows established on the same PDU session.

Within each PDU session, it is up to NG-RAN how to map multiple QoS flows to a DRB. The NG-RAN may map a GBR flow and a non-GBR flow, or more than one GBR flow to the same DRB, but mechanisms to optimise these cases are not within the scope of standardization.

12.2 Explicit Congestion Notification

The gNB and the UE support of the Explicit Congestion Notification (ECN) is specified in Section 5 of [27].

13 Security

13.1 Overview and Principles

The following principles apply to NR connected to 5GC security, see TS 33.501 [5]:

- For user data (DRBs), ciphering provides user data confidentiality and integrity protection provides user data integrity;
- For RRC signalling (SRBs), ciphering provides signalling data confidentiality and integrity protection signalling data integrity;

NOTE: Ciphering and integrity protections are optionally configured except for RRC signalling for which integrity protection is always configured. Ciphering and integrity protection can be configured per DRB but all DRBs belonging to a PDU session for which the User Plane Security Enforcement information indicates that UP integrity protection is required (see TS 23.502 [22]), are configured with integrity protection.

- For key management and data handling, any entity processing cleartext shall be protected from physical attacks and located in a secure environment;
- The gNB (AS) keys are cryptographically separated from the 5GC (NAS) keys;
- Separate AS and NAS level Security Mode Command (SMC) procedures are used;
- A sequence number (COUNT) is used as input to the ciphering and integrity protection and a given sequence number must only be used once for a given key (except for identical re-transmission) on the same radio bearer in the same direction.

The keys are organised and derived as follows:

- Key for AMF:
  - K_{AMF} is a key derived by ME and SEAF from K_{SEAF}.
- Keys for NAS signalling:

Samsung Exhibit 1011, Page 67 of 97

- K_{NASint} is a key derived by ME and AMF from K_{AMF}, which shall only be used for the protection of NAS signalling with a particular integrity algorithm;
- K_{NASenc} is a key derived by ME and AMF from K_{AMF}, which shall only be used for the protection of NAS signalling with a particular encryption algorithm.

Key for gNB:

- K_{gNB} is a key derived by ME and AMF from K_{AMF}. K_{gNB} is further derived by ME and source gNB when performing horizontal or vertical key derivation.

Keys for UP traffic:

- K_{UPenc} is a key derived by ME and gNB from K_{gNB}, which shall only be used for the protection of UP traffic between ME and gNB with a particular encryption algorithm;
- K_{UPint} is a key derived by ME and gNB from K_{gNB}, which shall only be used for the protection of UP traffic between ME and gNB with a particular integrity algorithm.

Keys for RRC signalling:

- K_{RRCint} is a key derived by ME and gNB from K_{gNB}, which shall only be used for the protection of RRC signalling with a particular integrity algorithm;
- K_{RRCenc} is a key derived by ME and gNB from K_{gNB}, which shall only be used for the protection of RRC signalling with a particular encryption algorithm.

Intermediate keys:

- NH is a key derived by ME and AMF to provide forward security.
- K_{gNB}* is a key derived by ME and gNB when performing a horizontal or vertical key derivation.

The primary authentication enables mutual authentication between the UE and the network and provide an anchor key called K_{SEAF}. From K_{SEAF}, K_{AMF} is created during e.g. primary authentication or NAS key re-keying and key refresh events. Based on K_{AMF}, K_{NASint} and K_{NASenc} are then derived when running a successful NAS SMC procedure.

Whenever an initial AS security context needs to be established between UE and gNB, AMF and the UE derive a K_{gNB} and a Next Hop parameter (NH). The K_{gNB} and the NH are derived from the K_{AMF}. A NH Chaining Counter (NCC) is associated with each K_{gNB} and NH parameter. Every K_{gNB} is associated with the NCC corresponding to the NH value from which it was derived. At initial setup, the K_{gNB} is derived directly from K_{AMF}, and is then considered to be associated with a virtual NH parameter with NCC value equal to zero. At initial setup, the derived NH value is associated with the NCC value one. On handovers, the basis for the K_{gNB} that will be used between the UE and the target gNB, called K_{gNB}*, is derived from either the currently active K_{gNB} or from the NH parameter. If K_{gNB}* is derived from the currently active K_{gNB}, this is referred to as a horizontal key derivation and is indicated to UE with an NCC that does not increase. If the K_{gNB}* is derived from the NH parameter, the derivation is referred to as a vertical key derivation and is indicated to UE with an NCC increase. Finally, K_{RRCint}, K_{RRCenc}, K_{UPint} and K_{UPenc} are derived based on K_{gNB} after a new K_{gNB} is derived. This is depicted on Figure 13.1-1 below:

Samsung Exhibit 1011, Page 68 of 97

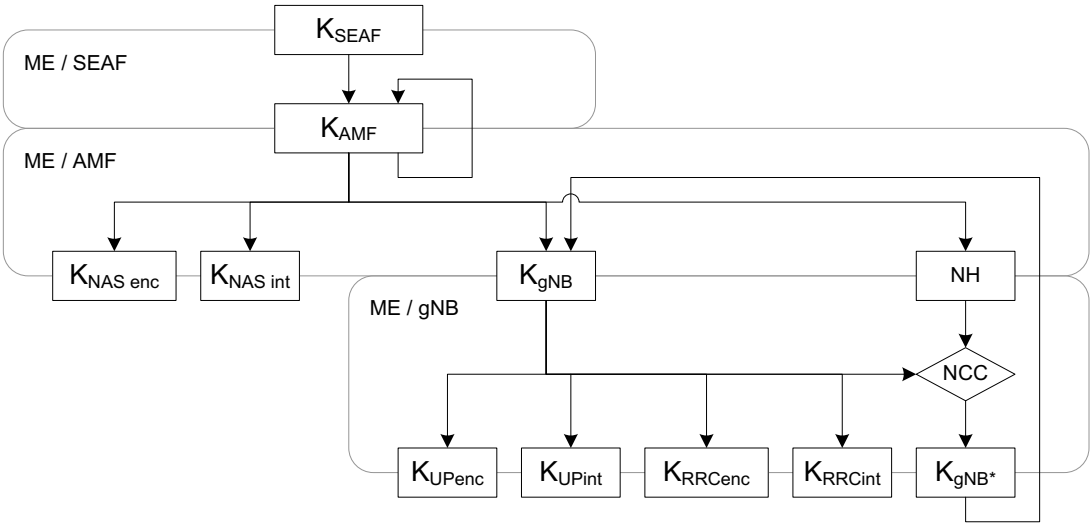

Figure 13.1-1: 5G Key Derivation

With such key derivation, a gNB with knowledge of a K_{gNB}, shared with a UE, is unable to compute any previous K_{gNB} that has been used between the same UE and a previous gNB, therefore providing backward security. Similarly, a gNB with knowledge of a K_{gNB}, shared with a UE, is unable to predict any future K_{gNB} that will be used between the same UE and another gNB after n or more handovers (since NH parameters are only computable by the UE and the AMF).

The AS SMC procedure is for RRC and UP security algorithms negotiation and RRC security activation. When AS security context is to be established in the gNB, the AMF sends the UE 5G security capabilities to the gNB. The gNB chooses the ciphering algorithm which has the highest priority from its configured list and is also present in the UE 5G security capabilities. The gNB also chooses the integrity algorithm which has the highest priority from its configured list and is also present in the UE 5G security capabilities. The chosen algorithms are indicated to the UE in the AS SMC and this message is integrity protected. RRC downlink ciphering (encryption) at the gNB starts after sending the AS SMC message. RRC uplink deciphering (decryption) at the gNB starts after receiving and successful verification of the integrity protected AS security mode complete message from the UE. The UE verifies the validity of the AS SMC message from the gNB by verifying the integrity of the received message. RRC uplink ciphering (encryption) at the UE starts after sending the AS security mode complete message. RRC downlink deciphering (decryption) at the UE shall start after receiving and successful verification of the AS SMC message. The RRC Connection Reconfiguration procedure used to add DRBs shall be performed only after RRC security has been activated as part of the AS SMC procedure.

The maximum supported data rate for integrity protected DRBs is a UE capability indicated at NAS layer, with a minimum value of 64 kbps and a maximum value of the highest data rate supported by the UE. In case of failed integrity check (i.e. faulty or missing MAC-I), the concerned PDU shall be discarded by the receiving PDCP entity.

Key refresh is possible for K_{gNB}, $K_{RRC\text{-}enc}$, $K_{RRC\text{-}int}$, $K_{UP\text{-}enc}$, and $K_{UP\text{-}int}$ and can be initiated by the gNB when a PDCP COUNTs are about to be re-used with the same Radio Bearer identity and with the same K_{gNB}. Key re-keying is also possible for the K_{gNB}, $K_{RRC\text{-}enc}$, $K_{RRC\text{-}int}$, $K_{UP\text{-}enc}$, and $K_{UP\text{-}int}$ and can be initiated by the AMF when a 5G AS security context different from the currently active one shall be activated.

13.2 Security Termination Points

The table below describes the security termination points.

Table 13.2-1 Security Termination Points

	Ciphering	Integrity Protection
NAS Signalling	AMF	AMF
RRC Signalling	gNB	gNB
User Plane Data	gNB	gNB

Samsung Exhibit 1011, Page 69 of 97

13.3 State Transitions and Mobility

As a general principle, on RRC_IDLE to RRC_CONNECTED transitions, RRC protection keys and UP protection keys are generated while keys for NAS protection as well as higher layer keys are assumed to be already available. These higher layer keys may have been established as a result of an AKA run, or as a result of a transfer from another AMF during handover or idle mode mobility see TS 23.502 [22]).

On RRC_CONNECTED to RRC_IDLE transitions, the gNBs deletes the keys it stores for that UE such that state information for idle mode UEs only has to be maintained in AMF. It is also assumed that gNB does no longer store state information about the corresponding UE and deletes the current keys from its memory. In particular, on connected to idle transitions:

- The gNB and UE delete NH, K_{gNB}, K_{RRCint}, K_{RRCenc}, K_{UPint} and K_{UPenc} and related NCC;
- AMF and UE keeps K_{AMF}, K_{NASint} and K_{NASenc} stored.

On handovers with vertical key derivation the NH is further bound to the target PCI and its frequency ARFCN-DL before it is taken into use as the K_{gNB} in the target gNB. On handovers with horizontal key derivation the currently active K_{gNB} is further bound to the target PCI and its frequency ARFCN-DL before it is taken into use as the K_{gNB} in the target gNB (see subclause 13.1).

It is not required to change the AS security algorithms during intra-gNB-CU handover. If the UE does not receive an indication of new AS security algorithms during an intra-gNB-CU handover, the UE shall continue to use the same algorithms as before the handover (see TS 38.331 [12]).

14 UE Capabilities

The UE capabilities in NR do not rely on UE categories: UE categories associated to fixed peak data rates are only defined for marketing purposes and not signalled to the network. Instead, the network determines the UL and DL data rate supported by a UE from the supported band combinations and from the baseband capabilities (modulation scheme, MIMO layers, …).

To limit signalling overhead, the gNB can request the UE to provide NR capabilities for a restricted set of bands. When responding, the UE can skip a subset of the requested band combinations when the corresponding UE capabilities are the same.

15 Self-Configuration and Self-Optimisation

15.1 Definitions

Void.

15.2 Void

15.3 Self-configuration

15.3.1 Dynamic configuration of the NG-C interface

15.3.1.1 Prerequisites

The following prerequisites are assumed:

- An initial remote IP end point to be used for SCTP initialisation is provided to the NG-RAN node for each AMF the NG-RAN node is supposed to connect to.

Samsung Exhibit 1011, Page 70 of 97

15.3.1.2 SCTP initialization

NG-RAN establishes the first SCTP (IETF RFC 4960 [23]) using a configured IP address.

NOTE: The NG-RAN node may use different source and/or destination IP end point(s) if the SCTP establishment towards one IP end point fails. How the NG-RAN node gets the remote IP end point(s) and its own IP address are outside the scope of this specification.

15.3.1.3 Application layer initialization

Once SCTP connectivity has been established, the NG-RAN node and the AMF shall exchange application level configuration data over NGAP with the NG Setup procedure, which is needed for these two nodes to interwork correctly on the NG interface.

- The NG-RAN node provides the relevant configuration information to the AMF, which includes list of supported TA(s), etc;
- The AMF provides the relevant configuration information to the NG-RAN node, which includes PLMN ID, etc.;
- When the application layer initialization is successfully concluded, the dynamic configuration procedure is completed and the NG-C interface is operational.

After the application layer initialization is successfully completed, the AMF may add or update or remove SCTP endpoints to be used for NG-C signalling between the AMF and the NG-RAN node pair as specified in TS 23.501 [3].

15.3.2 Dynamic Configuration of the Xn interface

15.3.2.1 Prerequisites

The following prerequisites are necessary:

- An initial remote IP end point to be used for SCTP initialisation is provided to the NG-RAN node.

15.3.2.2 SCTP initialization

NG-RAN establishes the first SCTP (IETF RFC 4960 [23]) using a configured IP address.

NOTE: The NG-RAN node may use different source and/or destination IP end point(s) if the SCTP establishment towards one IP end point fails.

15.3.2.3 Application layer initialization

Once SCTP connectivity has been established, the NG-RAN node and its candidate peer NG-RAN node are in a position to exchange application level configuration data over XnAP needed for the two nodes to interwork correctly on the Xn interface.

- The NG-RAN node provides the relevant configuration information to the candidate NG-RAN node, which includes served cell information.
- The candidate NG-RAN node provides the relevant configuration information to the initiating NG-RAN node, which includes served cell information.
- When the application layer initialization is successfully concluded, the dynamic configuration procedure is completed and the Xn interface is operational.
- The NG-RAN node shall keep neighbouring NG-RAN nodes updated with the complete list of served cells, or, if requested by the peer NG-RAN node, by a limited list of served cells, while the Xn interface is operational.

Samsung Exhibit 1011, Page 71 of 97

15.3.3 Automatic Neighbour Cell Relation Function

15.3.3.1 General

The purpose of ANR function is to relieve the operator from the burden of manually managing NCRs. Figure 15.3.3.1-1 shows ANR and its environment:

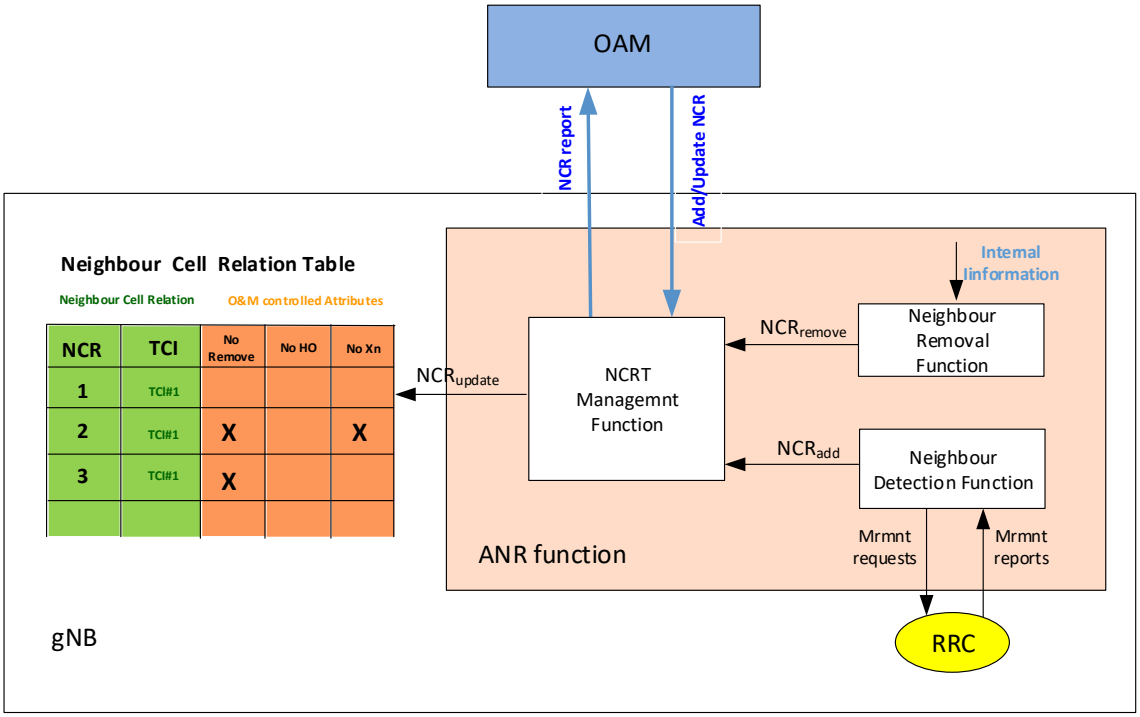

Figure 15.3.3.1-1: Interaction between gNB and OAM due to ANR

The ANR function resides in the gNB and manages the Neighbour Cell Relation Table (NCRT). Located within ANR, the Neighbour Detection Function finds new neighbours and adds them to the NCRT. ANR also contains the Neighbour Removal Function which removes outdated NCRs. The Neighbour Detection Function and the Neighbour Removal Function are implementation specific.

An existing NCR from a source cell to a target cell means that gNB controlling the source cell:

a) Knows the global and physical IDs (e.g. NR CGI/NR PCI, ECGI/PCI) of the target cell.

b) Has an entry in the NCRT for the source cell identifying the target cell.

c) Has the attributes in this NCRT entry defined, either by OAM or set to default values.

NCRs are cell-to-cell relations, while an Xn link is set up between two gNBs. Neighbour Cell Relations are unidirectional, while an Xn link is bidirectional.

NOTE: The neighbour information exchange, which occurs during the Xn Setup procedure or in the gNB Configuration Update procedure, may be used for ANR purpose.

The ANR function also allows OAM to manage the NCRT. OAM can add and delete NCRs. It can also change the attributes of the NCRT. The OAM system is informed about changes in the NCRT.

15.3.3.2 Intra-system Automatic Neighbour Cell Relation Function

ANR relies on NCGI (see subclause 8.2) and ANR reporting of E-UTRA cells as specified in TS 36.300 [2].

Samsung Exhibit 1011, Page 72 of 97

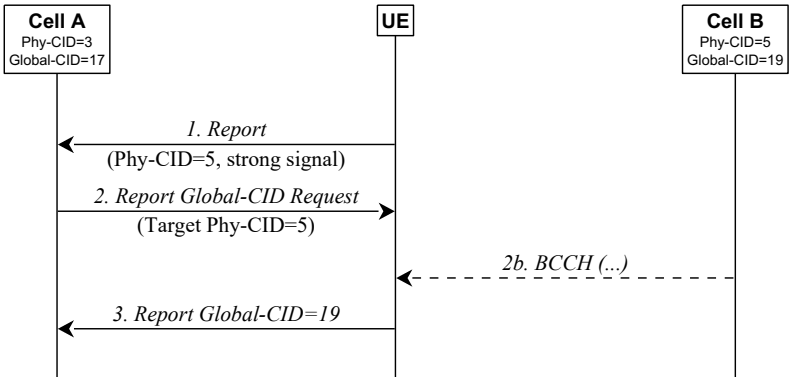

Figure 15.3.3.2-1: Automatic Neighbour Relation Function

Figure 15.3.3.2-1 depicts an example where the NG-RAN node serving cell A has an ANR function. In RRC_CONNECTED, the NG-RAN node instructs each UE to perform measurements on neighbour cells. The NG-RAN node may use different policies for instructing the UE to do measurements, and when to report them to the NG-RAN node. This measurement procedure is as specified in TS 38.331[12] and TS 36.331 [29].

1. The UE sends a measurement report regarding cell B. This report contains Cell B's PCI, but not its NCGI/ECGI.

When the NG-RAN node receives a UE measurement report containing the PCI, the following sequence may be used.

2. The NG-RAN node instructs the UE, using the newly discovered PCI as parameter, to read all the broadcast NCGI(s) /ECGI(s), TAC(s), RANAC(s), PLMN ID(s) and, for neighbour NR cells, NR frequency band(s). To do so, the NG-RAN node may need to schedule appropriate idle periods to allow the UE to read the NCGI/ECGI from the broadcast channel of the detected neighbour cell. How the UE reads the NCGI/ECGI is specified in TS 38.331 [12] and TS 36.331 [29].

3. When the UE has found out the new cell's NCGI(s) /ECGI(s), the UE reports all the broadcast NCGI(s)/ECGI(s) to the serving cell NG-RAN node. In addition, the UE reports all the tracking area code(s), RANAC(s), PLMN IDs and, for neighbour NR cells, NR frequency band(s), that have been read by the UE. In case the detected NR cell does not broadcast SIB1, the UE may report *noSIB1* indication as specified in TS 38.331 [12].

4. The NG-RAN node decides to add this neighbour relation, and can use PCI and NCGI(s)/ECGI(s) to:

   a. Lookup a transport layer address to the new NG-RAN node.

   b. Update the Neighbour Cell Relation List.

   c. If needed, setup a new Xn interface towards this NG-RAN node.

15.3.3.3 Void

15.3.3.4 Void

15.3.3.5 Inter-system Automatic Neighbour Cell Relation Function

For Inter-system ANR, each cell contains an Inter Frequency Search list. This list contains all frequencies that shall be searched.

Samsung Exhibit 1011, Page 73 of 97

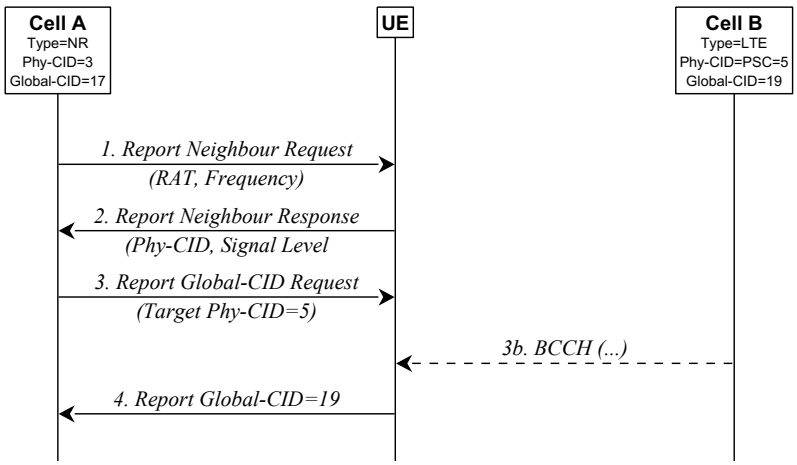

Figure 15.3.3.5-1: Automatic Neighbour Relation Function in case of E-UTRAN detected cell

Figure 15.3.3.5-1 depicts an example where the NG-RAN node serving cell A has an ANR function. In RRC_CONNECTED, the NG-RAN node instructs a UE to perform measurements and detect E-UTRA cells connected to EPC. The NG-RAN node may use different policies for instructing the UE to do measurements, and when to report them to the NG-RAN node.

1 The NG-RAN node instructs a UE to look for neighbour cells in the target system. To do so the NG-RAN node may need to schedule appropriate idle periods to allow the UE to scan all cells in the target sysstem.

2 The UE reports the PCI and carrier frequency of the detected cells in the target system.

When the NG-RAN node receives UE reports containing PCIs of cell(s) the following sequence may be used.

3 The NG-RAN node instructs the UE, using the newly discovered PCI as parameter, to read the ECGI, the TAC and all available PLMN ID(s) of the newly detected cell in case of E-UTRA detected cells. The UE ignores transmissions from the serving cell while finding the requested information transmitted in the broadcast channel of the detected inter-system/inter-frequency neighbour cell. To do so, the NG-RAN node may need to schedule appropriate idle periods to allow the UE to read the requested information from the broadcast channel of the detected inter-system neighbour cell.

4 After the UE has read the requested information in the new cell, it reports the detected ECGI, TAC, and available PLMN ID(s) to the serving cell NG-RAN node.

5 The NG-RAN node updates its inter-system NCRT.

15.3.4 Xn-C TNL address discovery

If the NG-RAN node is aware of the RAN node ID of the candidate NG-RAN node (e.g. via the ANR function) but not of a TNL address suitable for SCTP connectivity, then the NG-RAN node can utilize the 5GC (an AMF it is connected to) to determine the TNL address as follows:

- The NG-RAN node sends the UPLINK RAN CONFIGURATION TRANSFER message to the AMF to request the TNL address of the candidate NG-RAN node, and includes relevant information such as the source and target RAN node ID.

- The AMF relays the request by sending the DOWNLINK RAN CONFIGURATION TRANSFER message to the candidate NG-RAN node identified by the target RAN node ID.

- The candidate NG-RAN node responds by sending the UPLINK RAN CONFIGURATION TRANSFER message containing one or more TNL addresses to be used for SCTP connectivity with the initiating NG-RAN node, and includes other relevant information such as the source and target RAN node ID.

- The AMF relays the response by sending the DOWNLINK CONFIGURATION TRANSFER message to the initiating NG-RAN node identified by the target RAN node ID.

Samsung Exhibit 1011, Page 74 of 97

NOTE: In this version of the specification, it is assumed that the NG-RAN node is able to determine the gNB ID length of the candidate gNB (e.g. based on OAM configuration).

15.4 Support for Energy Saving

15.4.1 General

The aim of this function is to reduce operational expenses through energy savings.

The function allows, for example in a deployment where capacity boosters can be distinguished from cells providing basic coverage, to optimize energy consumption enabling the possibility for an E-UTRA or NR cell providing additional capacity via single or dual connectivity, to be switched off when its capacity is no longer needed and to be re-activated on a need basis.

15.4.2 Solution description

The solution builds upon the possibility for the NG-RAN node owning a capacity booster cell to autonomously decide to switch-off such cell to lower energy consumption (inactive state). The decision is typically based on cell load information, consistently with configured information. The switch-off decision may also be taken by O&M.

The NG-RAN node may initiate handover actions in order to off-load the cell being switched off and may indicate the reason for handover with an appropriate cause value to support the target node in taking subsequent actions, e.g. when selecting the target cell for subsequent handovers.

All neighbour NG-RAN nodes are informed by the NG-RAN node owning the concerned cell about the switch-off actions over the Xn interface, by means of the NG-RAN node Configuration Update procedure.

All informed nodes maintain the cell configuration data, e.g., neighbour relationship configuration, also when a certain cell is inactive. If basic coverage is ensured by NG-RAN node cells, NG-RAN node owning non-capacity boosting cells may request a re-activation over the Xn interface if capacity needs in such cells demand to do so. This is achieved via the Cell Activation procedure. During switch off time period of the boost cell, the NG-RAN node may prevent idle mode UEs from camping on this cell and may prevent incoming handovers to the same cell.

The NG-RAN node receiving a request should act accordingly. The switch-on decision may also be taken by O&M. All peer NG-RAN nodes are informed by the NG-RAN node owning the concerned cell about the re-activation by an indication on the Xn interface.

15.4.3 O&M requirements

Operators should be able to configure the energy saving function.

The configured information should include:

- The ability of an NG-RAN node to perform autonomous cell switch-off;
- The ability of an NG-RAN node to request the re-activation of a configured list of inactive cells owned by a peer NG-RAN node.

O&M may also configure

- policies used by the NG-RAN node for cell switch-off decision;
- policies used by peer NG-RAN nodes for requesting the re-activation of an inactive cell.

Samsung Exhibit 1011, Page 75 of 97

16 Verticals Support

16.1 URLLC

16.1.1 Overview

The support of Ultra-Reliable and Low Latency Communications (URLLC) services is facilitated by the introduction of the mechanisms described in the following subclauses. Please note however that those mechanisms need not be limited to the provision of URLLC services. Furthermore, RRC can associate logical channels with different SR configurations, for instance, to provide more frequent SR opportunities to URLLC services.

16.1.2 LCP Restrictions

With LCP restrictions in MAC, RRC can restrict the mapping of a logical channel to a subset of the configured cells, numerologies, PUSCH transmission durations and control whether a logical channel can utilise the resources allocated by a Type 1 Configured Grant (see subclause 10.3). With such restrictions, it then becomes possible to reserve, for instance, the numerology with the largest subcarrier spacing and/or shortest PUSCH transmission duration for URLLC services. Furthermore, RRC can associate logical channels with different SR configurations, for instance, to provide more frequent SR opportunities to URLLC services.

16.1.3 Packet Duplication

When duplication is configured for a radio bearer by RRC, a secondary RLC entity is added to the radio bearer to handle the duplicated PDCP PDUs as depicted on Figure 16.1.3-1, where the logical channel corresponding to the primary RLC entity is referred to as *the primary logical channel*, and the logical channel corresponding to the secondary RLC entity, the *secondary logical channel*. The two RLC entities have the same RLC mode. Duplication at PDCP therefore consists in submitting the same PDCP PDUs twice: once to the primary RLC entity and a second time to the secondary RLC entity. With two independent transmission paths, packet duplication therefore increases reliability and reduces latency and is especially beneficial for URLLC services.

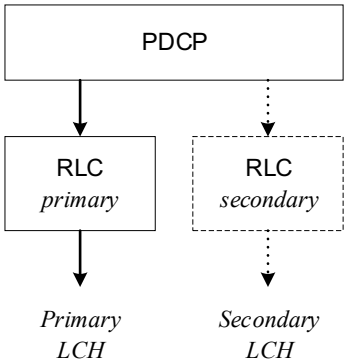

Figure 16.1.3-1: Packet Duplication

NOTE: PDCP control PDUs are not duplicated and always submitted to the primary RLC entity.

When configuring duplication for a DRB, RRC also sets the initial state (either activated or deactivated). After the configuration, the state can then be dynamically controlled by means of a MAC control element and in DC, the UE applies the MAC CE commands regardless of their origin (MCG or SCG). When duplication is configured for an SRB the state is always active and cannot be dynamically controlled.

When activating duplication for a DRB, NG-RAN should ensure that at least one serving cell is activated for each logical channel of the DRB; and when the deactivation of SCells leaves no serving cells activated for a logical channel of the DRB, NG-RAN should ensure that duplication is also deactivated.

When duplication is activated, the original PDCP PDU and the corresponding duplicate shall not be transmitted on the same carrier. The primary and secondary logical channels can either belong to the same MAC entity (referred to as CA

Samsung Exhibit 1011, Page 76 of 97

duplication) or to different ones (referred to as DC duplication). In CA duplication, logical channel mapping restrictions are used in MAC to ensure that the primary and secondary logical channels are not sent on the same carrier.

When duplication is deactivated for a DRB, the secondary RLC entity is not re-established, the HARQ buffers are not flushed, and the transmitting PDCP entity should indicate to the secondary RLC entity to discard all duplicated PDCP PDUs. In addition, in case of CA duplication, the logical channel mapping restrictions of the primary and secondary logical channels are lifted for as long as duplication remains deactivated.

When an RLC entity acknowledges the transmission of a PDCP PDU, the PDCP entity shall indicate to the other RLC entity to discard it. In addition, in case of CA duplication, when the RLC entity restricted to only SCell(s) reaches the maximum number of retransmissions for a PDCP PDU, the UE informs the gNB but does not trigger RLF.

16.2 IMS Voice

16.2.0 Support for IMS voice

For IMS voice support in NG-RAN, the following is assumed:

- Network ability to support IMS voice sessions, i.e. ability to support QoS flows with 5QI for voice and IMS signalling (see sub-clause 12 and TS 23.501 [3]), or through EPC System fallback;
- UE capability to support "IMS voice over PS", see TS 24.501 [28].

The capabilities indications check is handled at NAS layer. To maintain the voice service in NG-RAN, the UE provides additional capabilities over RRC (see TS 38.331 [12]), that are used to determine accurate NR voice support options.

Further MMTEL IMS voice and video enhancements are facilitated by the mechanisms described in the following subclauses.

16.2.1 Support for MMTEL IMS voice and video enhancements

16.2.1.1 RAN-assisted codec adaptation

RAN-assisted codec adaptation provides a means for the gNB to send codec adaptation indication with recommended bit rate to assist the UE to select or adapt to a codec rate for MMTEL voice or MMTEL video. The RAN-assisted codec adaptation mechanism supports the uplink/downlink bit rate increase or decrease. For a bearer associated with configuration of MBR greater than GBR, the recommended uplink/downlink bit rate is within boundaries set by the MBR and GBR of the concerned bearer.

For uplink or downlink bit rate adaptation, gNB may send a recommended bit rate to the UE to inform the UE on the currently recommended transport bit rate on the local uplink or downlink, which the UE may use in combination with other information to adapt the bit rate, e.g. the UE may send a bit rate request to the peer UE via application layer messages as specified in TS 26.114 [24], which the peer UE may use in combination with other information to adapt the codec bit rate. The recommended bit rate is in kbps at the physical layer at the time when the decision is made.

The recommended bit rate for UL and DL is conveyed as a MAC Control Element (CE) from the gNB to the UE as outlined in Figure 16.2.1.1-1.

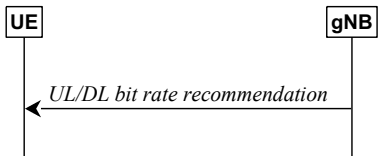

Figure 16.2.1.1-1: UL or DL bit rate recommendation

Based on the recommended bit rate from the gNB, a UE may initiate an end-to-end bit rate adaptation with its peer (UE or MGW). The UE may also send a query message to its local gNB to check if a bit rate recommended by its peer can be provided by the gNB. The UE is not expected to go beyond the recommended bit rate from the gNB.

Samsung Exhibit 1011, Page 77 of 97

The recommended bit rate query message is conveyed as a MAC CE from the UE to the gNB as outlined in Figure 16.2.1.1-2.

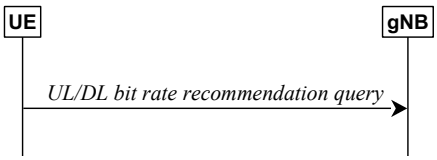

Figure 16.2.1.1-2: UL or DL bit rate recommendation query

A prohibit timer can be configured per logical channel by the network to limit UEs sending frequent query MAC CEs. Independent prohibit timers are used for each direction (uplink and downlink) to prohibit the UE from retransmitting exactly the same query MAC CE to the gNB during the configured time.

16.2.1.2 MMTEL voice quality/coverage enhancements

The air interface delay budget can be relaxed to increase the robustness of the transmission for coverage enhancement. Such relaxation may be achieved when a UE in good coverage indicates a preference to the gNB to reduce the local air interface delay by sending a *DelayBudgetReport* message to decrease the DRX cycle length, so that the E2E delay and jitter can be reduced. When the UE detects changes such as end-to-end MMTEL voice quality or local radio quality, the UE may inform the gNB its new preference by sending *DelayBudgetReport* messages with updated contents.

16.3 Network Slicing

16.3.1 General Principles and Requirements

In this subclause, the general principles and requirements related to the realization of network slicing in the NG-RAN for NR connected to 5GC and for E-UTRA connected to 5GC are given.

A network slice always consists of a RAN part and a CN part. The support of network slicing relies on the principle that traffic for different slices is handled by different PDU sessions. Network can realise the different network slices by scheduling and also by providing different L1/L2 configurations.

Each network slice is uniquely identified by a S-NSSAI, as defined in 3GPP TS 23.501 [3]. NSSAI (Network Slice Selection Assistance Information) includes one or a list of S-NSSAIs (Single NSSAI) where a S-NSSAI is a combination of:

- mandatory SST (Slice/Service Type) field, which identifies the slice type and consists of 8 bits (with range is 0-255);
- optional SD (Slice Differentiator) field, which differentiates among Slices with same SST field and consist of 24 bits.

The list includes at most 8 S-NSSAI(s).

The UE provides NSSAI (Network Slice Selection Assistance Information) for network slice selection in *RRCSetupComplete*, if it has been provided by NAS (see subclause 9.2.1.3). While the network can support large number of slices (hundreds), the UE need not support more than 8 slices simultaneously.

Network Slicing is a concept to allow differentiated treatment depending on each customer requirements. With slicing, it is possible for Mobile Network Operators (MNO) to consider customers as belonging to different tenant types with each having different service requirements that govern in terms of what slice types each tenant is eligible to use based on Service Level Agreement (SLA) and subscriptions.

The following key principles apply for support of Network Slicing in NG-RAN:

RAN awareness of slices

- NG-RAN supports a differentiated handling of traffic for different network slices which have been pre-configured. How NG-RAN supports the slice enabling in terms of NG-RAN functions (i.e. the set of network functions that comprise each slice) is implementation dependent.

Samsung Exhibit 1011, Page 78 of 97

Selection of RAN part of the network slice

- NG-RAN supports the selection of the RAN part of the network slice, by NSSAI provided by the UE or the 5GC which unambiguously identifies one or more of the pre-configured network slices in the PLMN.

Resource management between slices

- NG-RAN supports policy enforcement between slices as per service level agreements. It should be possible for a single NG-RAN node to support multiple slices. The NG-RAN should be free to apply the best RRM policy for the SLA in place to each supported slice.

Support of QoS

- NG-RAN supports QoS differentiation within a slice.

RAN selection of CN entity

- For initial attach, the UE may provide NSSAI to support the selection of an AMF. If available, NG-RAN uses this information for routing the initial NAS to an AMF. If the NG-RAN is unable to select an AMF using this information or the UE does not provide any such information the NG-RAN sends the NAS signalling to one of the default AMFs.

- For subsequent accesses, the UE provides a Temp ID, which is assigned to the UE by the 5GC, to enable the NG-RAN to route the NAS message to the appropriate AMF as long as the Temp ID is valid (NG-RAN is aware of and can reach the AMF which is associated with the Temp ID). Otherwise, the methods for initial attach applies.

Resource isolation between slices

- The NG-RAN supports resource isolation between slices. NG-RAN resource isolation may be achieved by means of RRM policies and protection mechanisms that should avoid that shortage of shared resources in one slice breaks the service level agreement for another slice. It should be possible to fully dedicate NG-RAN resources to a certain slice. How NG-RAN supports resource isolation is implementation dependent.

Access control

- By means of the unified access control (see subclause 7.4), operator-defined access categories can be used to enable differentiated handling for different slices. NG-RAN may broadcast barring control information (i.e. a list of barring parameters associated with operator-defined access categories) to minimize the impact of congested slices.

Slice Availability

- Some slices may be available only in part of the network. The NG-RAN supported S-NSSAI(s) is configured by OAM. Awareness in the NG-RAN of the slices supported in the cells of its neighbours may be beneficial for inter-frequency mobility in connected mode. It is assumed that the slice availability does not change within the UE's registration area.

- The NG-RAN and the 5GC are responsible to handle a service request for a slice that may or may not be available in a given area. Admission or rejection of access to a slice may depend by factors such as support for the slice, availability of resources, support of the requested service by NG-RAN.

Support for UE associating with multiple network slices simultaneously

- In case a UE is associated with multiple slices simultaneously, only one signalling connection is maintained and for intra-frequency cell reselection, the UE always tries to camp on the best cell. For inter-frequency cell reselection, dedicated priorities can be used to control the frequency on which the UE camps.

Granularity of slice awareness

- Slice awareness in NG-RAN is introduced at PDU session level, by indicating the S-NSSAI corresponding to the PDU Session, in all signalling containing PDU session resource information.

Validation of the UE rights to access a network slice

Samsung Exhibit 1011, Page 79 of 97

- It is the responsibility of the 5GC to validate that the UE has the rights to access a network slice. Prior to receiving the Initial Context Setup Request message, the NG-RAN may be allowed to apply some provisional/local policies, based on awareness of which slice the UE is requesting access to. During the initial context setup, the NG-RAN is informed of the slice for which resources are being requested.

16.3.2 AMF and NW Slice Selection

16.3.2.1 CN-RAN interaction and internal RAN aspects

NG-RAN selects AMF based on a Temp ID or NSSAI provided by the UE over RRC. The mechanisms used in the RRC protocol are described in the next sub clause.

Table 16.3.2.1-1 AMF selection based on Temp ID and NSSAI

Temp ID	NSSAI	AMF Selection by NG-RAN
not available or invalid	not available	One of the default AMFs is selected (NOTE)
not available or invalid	present	Selects AMF which supports UE requested slices
valid	not available, or present	Selects AMF per CN identity information in Temp ID

NOTE: The set of default AMFs is configured in the NG-RAN nodes via OAM.

16.3.2.2 Radio Interface Aspects

When triggered by the upper layer, the UE conveys the NSSAI over RRC in the format explicitly indicated by the upper layer.

16.3.3 Resource Isolation and Management

Resource isolation enables specialized customization and avoids one slice affecting another slice.

Hardware/software resource isolation is up to implementation. Each slice may be assigned with either shared or dedicated radio resource up to RRM implementation and SLA.

To enable differentiated handling of traffic for network slices with different SLA:

- NG-RAN is configured with a set of different configurations for different network slices by OAM;
- To select the appropriate configuration for the traffic for each network slice, NG-RAN receives relevant information indicating which of the configurations applies for this specific network slice.

16.3.4 Signalling Aspects

16.3.4.1 General

In this sub clause, signalling flows related to the realization of network slicing in the NG-RAN are given.

16.3.4.2 AMF and NW Slice Selection

RAN selects the AMF based on a Temp ID or NSSAI provided by the UE.

Samsung Exhibit 1011, Page 80 of 97

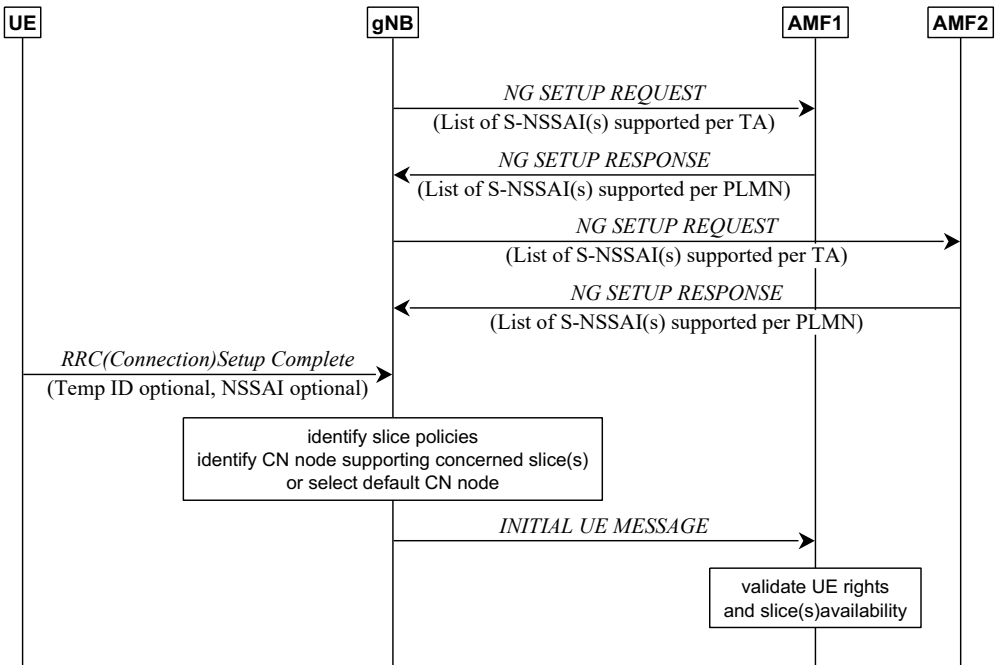

Figure 16.3.4.2-1: AMF selection

In case a Temp ID is not available, the NG-RAN uses the NSSAI provided by the UE at RRC connection establishment to select the appropriate AMF (the information is provided after MSG3 of the random access procedure). If such information is also not available, the NG-RAN routes the UE to one of the configured default AMF(s).

The NG-RAN uses the list of supported S-NSSAI(s) previously received in the NG Setup Response message when selecting the AMF with the NSSAI. This list may be updated via the AMF Configuration Update message.

16.3.4.3 UE Context Handling

Following the initial access, the establishment of the RRC connection and the selection of the correct AMF, the AMF establishes the complete UE context by sending the Initial Context Setup Request message to the NG-RAN over NG-C. The message contains the Allowed NSSAI and additionally contains the S-NSSAI(s) as part of the PDU session(s) resource description when present in the message. Upon successful establishment of the UE context and allocation of PDU session resources to the relevant network slice(s) when present, the NG-RAN responds with the Initial Context Setup Response message.

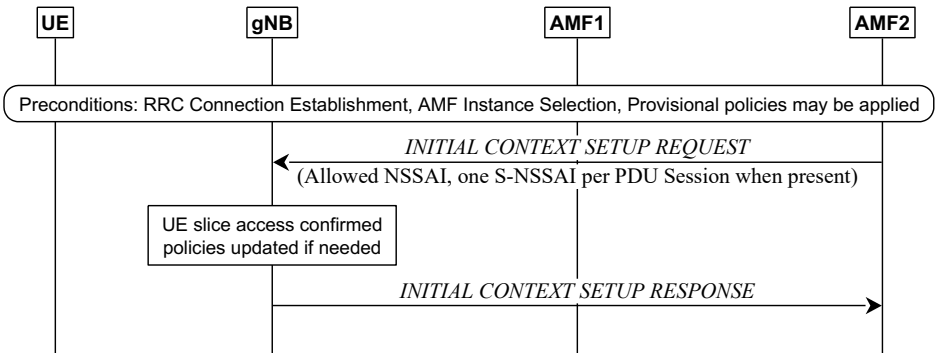

Figure 16.3.4.3-1: Network Slice-aware Initial Context Setup

16.3.4.4 PDU Session Setup Handling

When new PDU sessions need to be established, the 5GC requests the NG-RAN to allocate/ resources relative to the relevant PDU sessions by means of the PDU Session Resource Setup procedures over NG-C. One S-NSSAI is added per PDU session to be established, so NG-RAN is enabled to apply policies at PDU session level according to the SLA represented by the network slice, while still being able to apply (for example) differentiated QoS within the slice.

Samsung Exhibit 1011, Page 81 of 97

NG-RAN confirms the establishment of the resources for a PDU session associated to a certain network slice by responding with the PDU Session Resource Setup Response message over the NG-C interface.

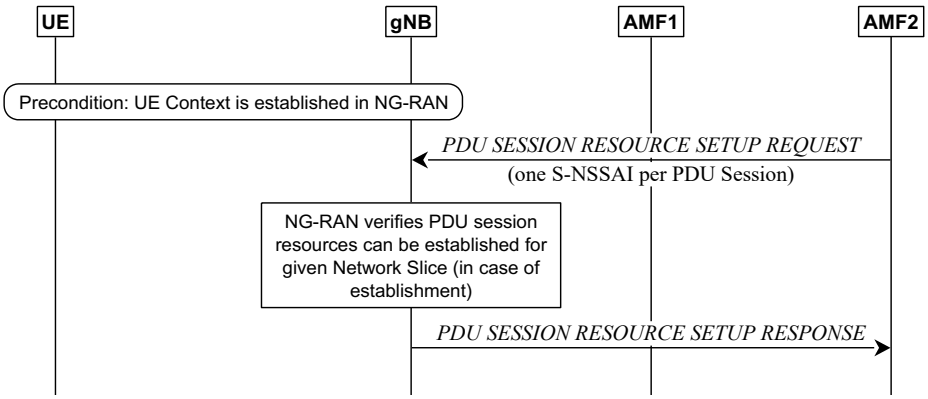

Figure 16.3.4.4-1: Network Slice-aware PDU Session Resource Setup

16.3.4.5 Mobility

To make mobility slice-aware in case of Network Slicing, S-NSSAI is introduced as part of the PDU session information that is transferred during mobility signalling. This enables slice-aware admission and congestion control.

Both NG and Xn handovers are allowed regardless of the slice support of the target NG-RAN node i.e. even if the target NG-RAN node does not support the same slices as the source NG-RAN node. An example for the case of connected mode mobility across different Registration Areas is shown in Figure 16.3.4.5-1 for the case of NG based handover and in Figure 16.3.4.5-2 for the case of Xn based handover.

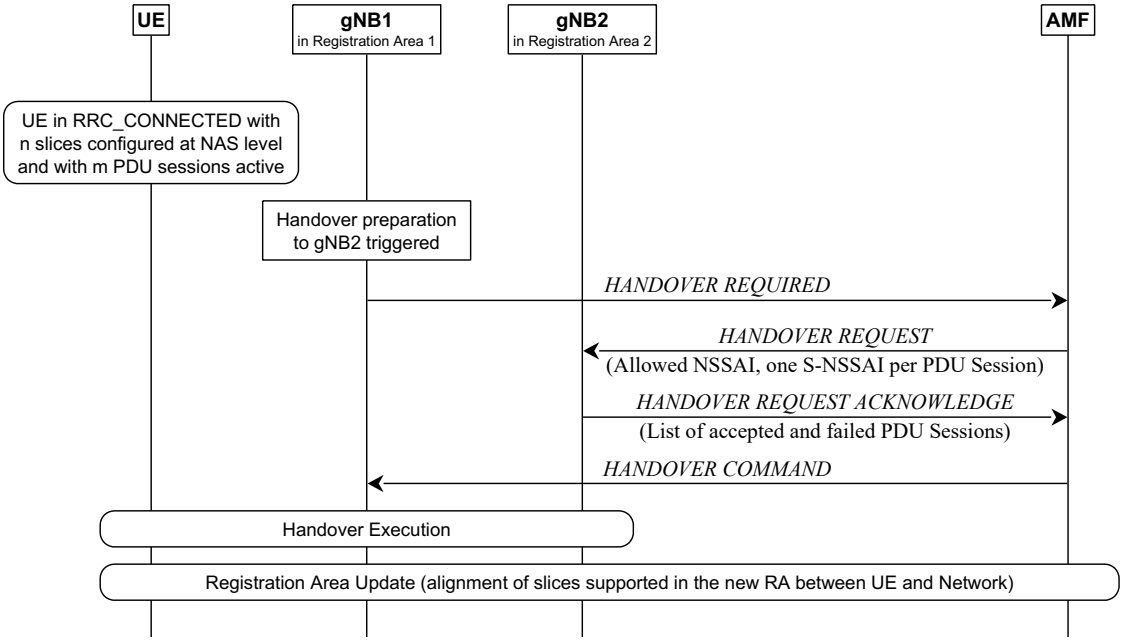

Figure 16.3.4.5-1: NG based mobility across different Registration Areas

Samsung Exhibit 1011, Page 82 of 97

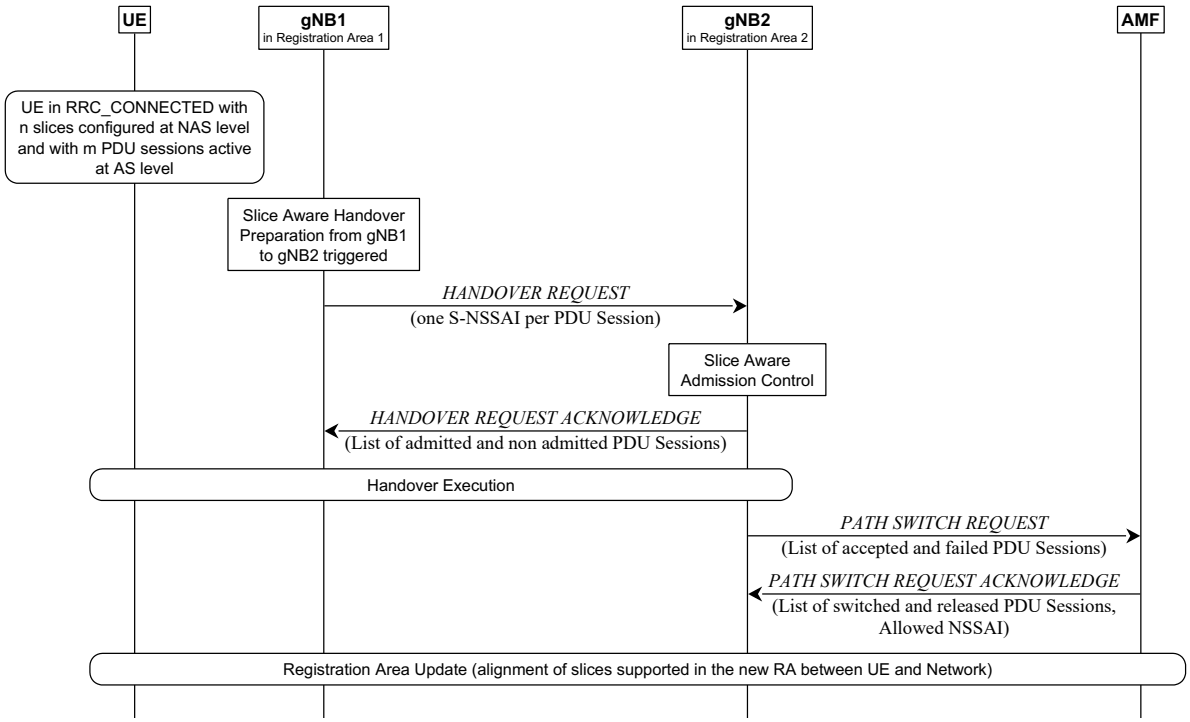

Figure 16.3.4.5-2: Xn based mobility across different Registration Areas

16.4 Public Warning System

NR connected to 5GC provides support for public warning systems (PWS) through means of system information broadcast capability. NR is responsible for scheduling and broadcasting of the warning messages as well as for paging the UE to provide indication that the warning message is being broadcast:

- Earthquake and Tsunami Warning System: ETWS is a public warning system developed to meet the regulatory requirements for warning notifications related to earthquake and/or tsunami events (see TS 22.168 [14]). ETWS warning notifications can either be a primary notification (short notification) or secondary notification (providing detailed information).

- Commercial Mobile Alert System: CMAS is a public warning system developed for the delivery of multiple, concurrent warning notifications (see TS 22.268 [15]).

Different SIBs are defined for ETWS primary notification, ETWS secondary notification and CMAS notification. Paging is used to inform UEs about ETWS indication and CMAS indication (see subclause 9.2.5). UE monitors ETWS/CMAS indication in its own paging occasion for RRC_IDLE and RRC_INACTIVE. UE monitors ETWS/CMAS indication in any paging occasion for RRC Connected. Paging indicating ETWS/CMAS notification triggers acquisition of system information (without delaying until the next modification period).

16.5 Emergency Services

16.5.1 Overview

NG-RAN provides support for Emergency Services either directly or through fallback mechanisms towards E-UTRA. The support of Emergency Services is broadcast in system information (see TS 38.331 [12]).

16.5.2 IMS Emergency call

An IMS Emergency call support indication is provided to inform the UE that emergency bearer services are supported. In normal service state the UE is informed if the PLMN supports emergency services through an Emergency Service Support indicator in the Attach and TAU procedures (see TS 23.501 [3]). In limited service state and for emergency services other than eCall over IMS, a UE is informed about if a cell supports emergency services over NG-RAN from a

Samsung Exhibit 1011, Page 83 of 97

broadcast indication (*ims-Emergency*). The broadcast indicator is set to "support" if any AMF in a non-shared environment or at least one of the PLMN's in a shared environment supports IMS emergency bearer services.

16.5.3 eCall over IMS

NG-RAN broadcast an indication to indicate support of eCall over IMS (*eCallOverIMS*). UEs that are in limited service state need to consider both *eCallOverIMS* and *ims-Emergency* to determine if eCall over IMS is possible.

16.5.4 Fallback

RAT fallback towards E-UTRA connected to 5GC is performed when NR does not support Emergency Services and System fallback towards E-UTRA connected to EPS is performed when 5GC does not support Emergency Services. Depending on factors such as CN interface availability, network configuration and radio conditions, the fallback procedure results in either CONNECTED state mobility (handover procedure) or IDLE state mobility (redirection) - see TS 23.501 [3] and TS 38.331 [12].

Samsung Exhibit 1011, Page 84 of 97

Annex A (informative): QoS Handling in RAN

A.1 PDU Session Establishment

The following figure shows an example message flow for a PDU session establishment. NAS procedures details between gNB and 5GC can be found in TS 23.501 [3], TS 23.502 [22] and TS 38.413 [26].

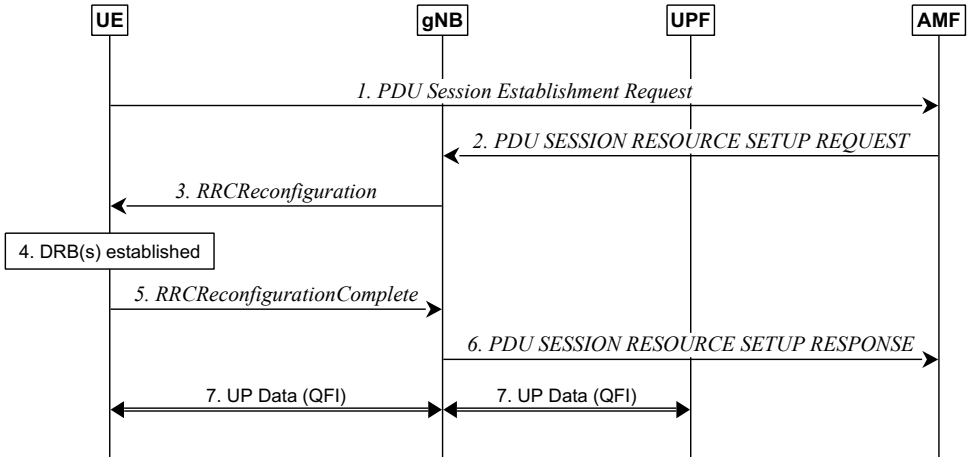

Figure A.1-1: PDU session establishment

1. UE requests a PDU session establishment to AMF.
2. AMF sends a PDU SESSION RESOURCE SETUP REQUEST message to gNB, which includes the NAS message to be sent to the UE with NAS QoS related information.
3. gNB sends an *RRCReconfiguration* message to UE including the configuration of at least one DRB and the NAS message received at Step 2.
4. UE establishes the DRB(s) for the new PDU session and creates the QFI to DRB mapping rules.
5. UE sends an *RRCReconfiguration Complete* message to gNB.
6. gNB sends a PDU SESSION RESOURCE SETUP RESPONSE message to AMF.
7. User Plane Data can then be exchanged between UE and gNB over DRB(s) according to the mapping rules and between UPF and gNB over the tunnel for the PDU session. QFI marking over Uu is optional (see subclause 12) while QFI marking over NG-U is always present.

A.2 New QoS Flow with RQoS

The following figure shows an example message flow when RQoS is used for a new QoS flow. In this example, the gNB receives from UPF a first downlink packet associated with a QFI for which the QoS parameters are known from the PDU session establishment, but for which there is no association to any DRB yet in AS.

Samsung Exhibit 1011, Page 85 of 97

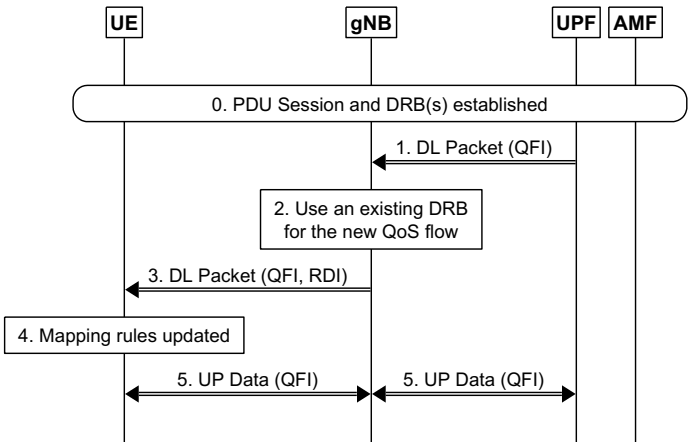

Figure A.2-1: DL data with new QFI sent over existing DRB

0. PDU session and DRB(s) have been already established.
1. gNB receives a downlink packet with a new QFI from UPF.
2. gNB decides to send the new QoS flow over an existing DRB.

NOTE: If gNB decides to send it over a new DRB, it needs to establish the DRB first.

3. gNB sends the DL packet over the selected DRB with the new QFI and RDI set in the SDAP header.
4. UE identifies the QFI and RDI in the received DL packet and the DRB on which the packet was received. The AS mapping rules are then updated accordingly.
5. User Plane Data for the new QoS flow can then be exchanged between UE and gNB over the DRB according to the updated mapping rules and between UPF and gNB over the tunnel for the PDU session.

A.3 New QoS Flow with Explicit RRC Signalling

The following figure shows an example message flow when explicit RRC signalling is used for a new QoS flow. In this example, the gNB receives from UPF a first downlink packet associated with a QFI, for which the QoS parameters are already known from the PDU session establishment, but for which there is no association to any DRB yet in AS.

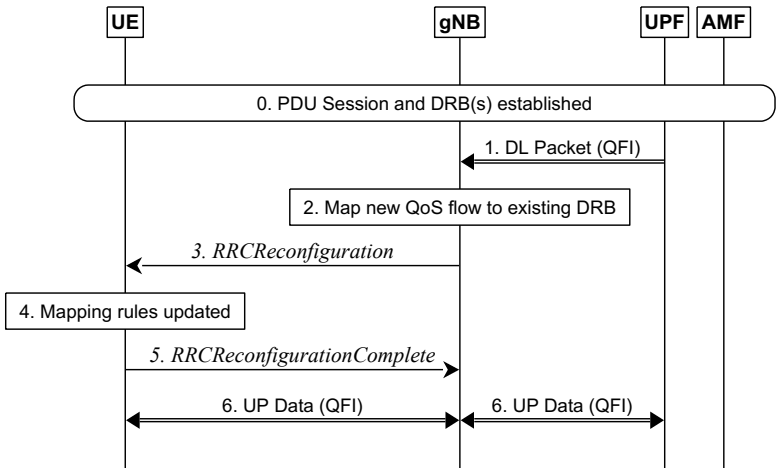

Figure A.3-1: DL data with new QFI sent over existing DRB

0. PDU session and DRB(s) have been already established.
1. gNB receives a downlink packet with a new QFI from UPF.

Samsung Exhibit 1011, Page 86 of 97

2. gNB decides to send the new QoS flow over an existing DRB using explicit RRC signalling for updating the AS mapping rules.
3. gNB sends an *RRCReconfiguration* message to UE with the new QFI to DRB mapping rule. gNB may also decide to update the DRB configuration if required to meet the QoS requirements for the new QoS Flow.
4. UE updates the QFI to DRB mapping rules and configuration (if received).
5. UE sends an *RRCReconfigurationComplete* message to gNB.
6. User Plane Data for the new QoS flow can then be exchanged between UE and gNB over the DRB according to the updated mapping rules and between UPF and gNB over the tunnel for the PDU session.

A.4 New QoS Flow with Explicit NAS Signalling

The following figure shows an example message flow when the gNB receives a new QoS flow establishment request from CN that involves NAS explicit signalling. The QoS flow establishment request provides the gNB and UE with the QoS parameters for the QFI. In this example, the gNB decides to establish a new DRB (rather than re-use an existing one) for this QoS flow and provides the mapping rule over RRC signalling. NAS procedures details between gNB and 5GC can be found in TS 23.501 [3], TS 23.502 [22] and TS 38.413 [26].

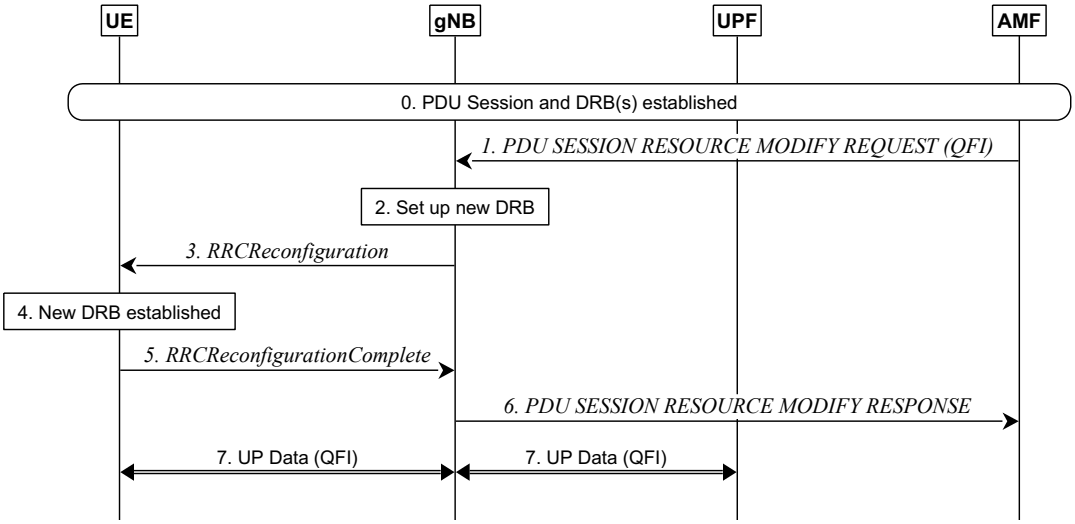

Figure A.4-1: DL data with new QoS Flow ID sent over new DRB with explicit signalling

0. PDU session DRB(s) have been already established.
1. gNB receives a PDU SESSION RESOURCE MODIFY REQUEST message from AMF for a new QoS flow.
2. If gNB cannot find an existing DRB to map this new QoS flow, it decides to establish a new DRB.
3. gNB sends an *RRCReconfiguration* message to UE including the DRB configuration with the new QFI to DRB mapping rule and the NAS message received at step 1.
4. UE establishes the DRB for the new QoS flow associated with this PDU session and updates the mapping rules.
5. UE sends an *RRCReconfigurationComplete* message to gNB.
6. gNB sends a PDU SESSION RESOURCE MODIFY RESPONSE message to AMF.
7. User Plane Data can then be exchanged between UE and gNB over DRB(s) according to the mapping rules and between UPF and gNB over the tunnel for the PDU session.

Samsung Exhibit 1011, Page 87 of 97

A.5 Release of QoS Flow with Explicit Signalling

The following figure shows an example message flow when the gNB receives a request to release a QoS flow from CN that involves explicit NAS signalling. NAS procedures details between gNB and 5GC can be found in TS 23.501 [3], TS 23.502 [22] and TS 38.413 [26].

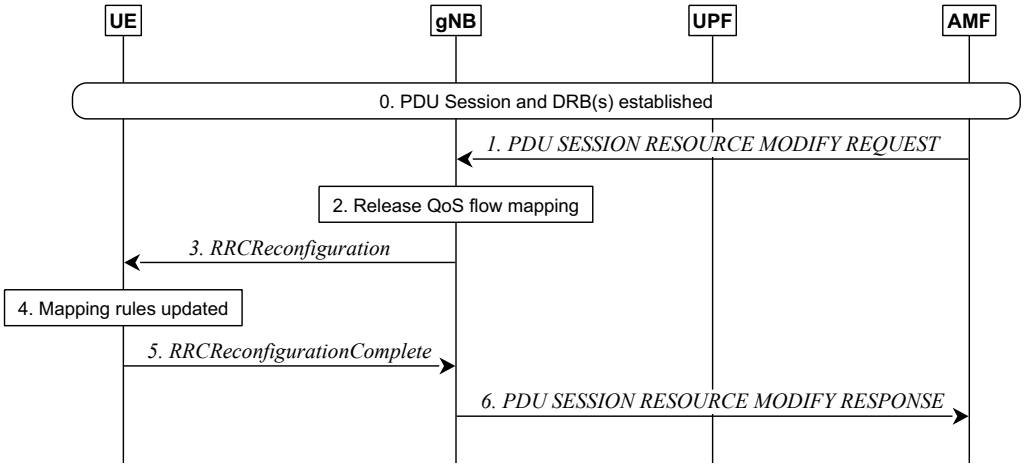

Figure A.5-1: Release of QoS Flow with Explicit Signalling

0. PDU session and DRB(s) have been already established.
1. gNB receives a PDU SESSION RESOURCE MODIFY REQUEST message from AMF to release a QoS flow.
2. The gNB decides to release corresponding the QFI to DRB mapping rule. Since the DRB also carries other QoS flows, the DRB is not released.
3. gNB sends an *RRCReconfiguration* message to UE to release the QFI to DRB mapping rule.
4. UE updates the AS QFI to DRB mapping rules to release this QFI to DRB mapping rule.
5. UE sends an *RRCReconfiguration*Complete message to gNB.
6. gNB sends a PDU SESSION RESOURCE MODIFY RESPONSE message to AMF.

A.6 UE Initiated UL QoS Flow

The following figure shows an example message flow when the UE AS receives an UL packet for a new QoS flow for which a QFI to DRB mapping rule does not exist.

Samsung Exhibit 1011, Page 88 of 97

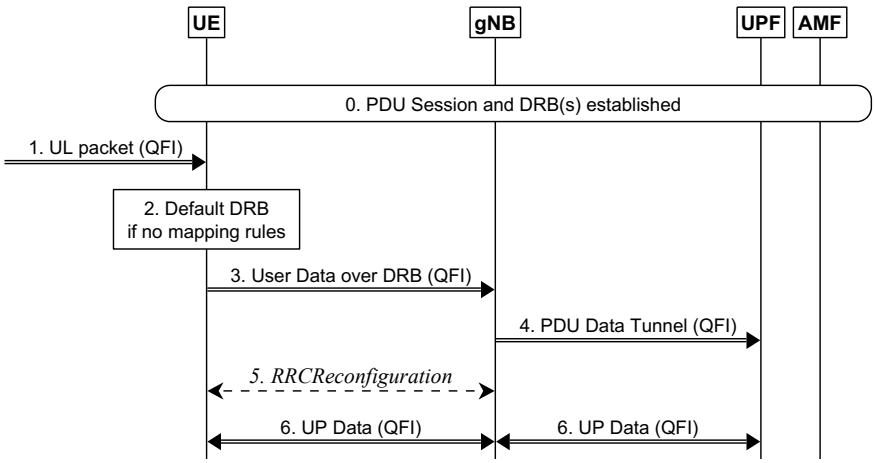

Figure A.6-1: UL packet with a new QoS flow for which a mapping does not exist in UE

0. PDU session and DRBs (including a default DRB) have been already established.
1. UE AS receives a packet with a new QFI from UE NAS.
2. UE uses the QFI of the packet to map it to a DRB. If there is no mapping of the QFI to a DRB in the AS mapping rules for this PDU session, then the packet is assigned to the default DRB.
3. UE sends the UL packet on the default DRB. The UE includes the QFI in the SDAP header.
4. gNB sends UL packets to UPF and includes the corresponding QFI.
5. If gNB wants to use a new DRB for this QoS flow, it sets up one. It can also choose to move the QoS flow to an existing DRB using RQoS or RRC signalling (see subclauses A.2 and A.3).
6. User Plane Data for the new QoS flow can then be exchanged between UE and gNB over the DRB according to the updated mapping rules and between UPF and gNB over the tunnel for the PDU session.

Samsung Exhibit 1011, Page 89 of 97

Annex B (informative): Deployment Scenarios

B.1 Supplementary Uplink

To improve UL coverage for high frequency scenarios, SUL can be configured (see TS 38.101 [18]). With SUL, the UE is configured with 2 ULs for one DL of the same cell as depicted on Figure B.1-1 below:

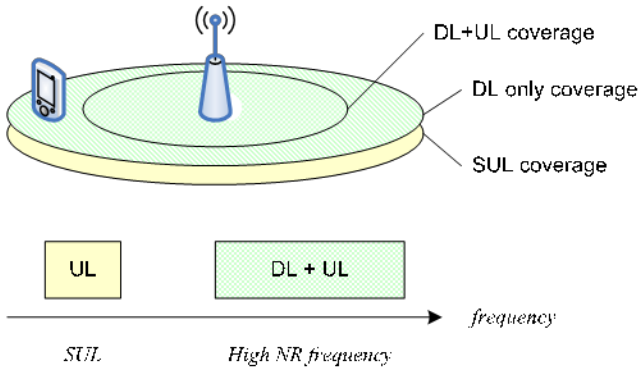

Figure B.1-1: Example of Supplementary Uplink

B.2 Multiple SSBs in a carrier

For a UE in RRC_CONNECTED, the BWPs configured by a serving cell may overlap in the frequency domain with the BWPs configured for other UEs by other cells within a carrier. Multiple SSBs may also be transmitted within the frequency span of a carrier used by the serving cell. However, from the UE perspective, each serving cell is associated to at most a single SSB. Figure B.2-1 below describes a scenario with multiple SSBs in a carrier, identifying two different cells (NCGI = 5, associated to SSB1, and NCGI = 6, associated to SSB3) with overlapping BWPs, and where RRM measurements can be configured to be performed by the UE on each of the available SSBs, i.e. SSB1, SSB2, SSB3 and SSB4.

Samsung Exhibit 1011, Page 90 of 97

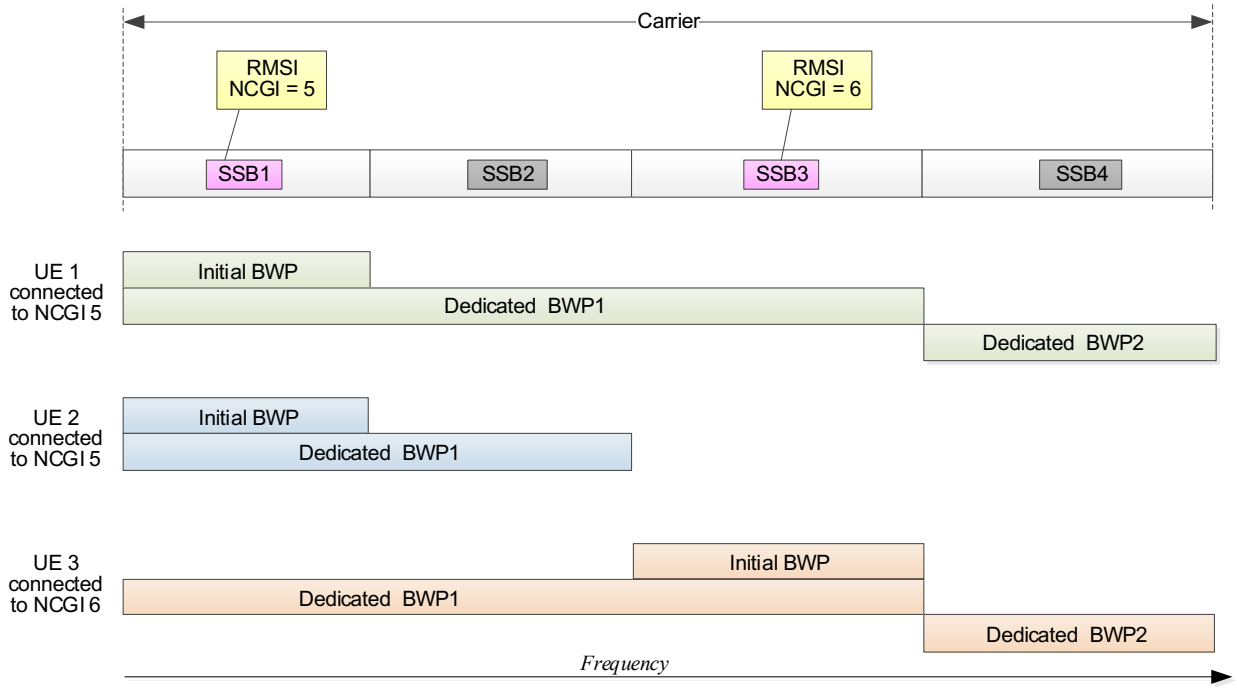

Figure B.2-1: Example of multiple SSBs in a carrier

Samsung Exhibit 1011, Page 91 of 97

Annex C (informative): I-RNTI Reference Profiles

The I-RNTI provides the new NG-RAN node a reference to the UE context in the old NG-RAN node. How the new NG-RAN node is able to resolve the old NG-RAN ID from the I-RNTI is a matter of proper configuration in the old and new NG-RAN node.

Table C-1 below provides some typical partitioning of an 40bit I-RNTI, assuming the following content:

- **UE specific reference**: reference to the UE context within a logical NG-RAN node;
- **NG-RAN node address index**: information to identify the NG-RAN node that has allocated the UE specific part;

NOTE: **RAT-specific information** may be introduced in a later release, containing information to identify the RAT of the cell within which the UE was sent to RRC_INACTIVE. This version of the specification only supports intra-RAT mobility of UEs in RRC_INACTIVE.

- **PLMN-specific information**: information supporting network sharing deployments, providing an index to the PLMN ID part of the Global NG-RAN node identifier.

Table C-1: I-RNTI reference profiles

Profile ID	UE specific reference	NG-RAN node address index (e.g., gNB ID, eNB ID)	RAT-specific information	PLMN-specific information	Comment
1	20 bits (~1 million values)	20 bits (~1 million values)	N/A	N/A	NG-RAN node address index may be very well represented by the LSBs of the gNB ID. This profile may be applicable for any NG-RAN RAT.
2	20 bits (~1 million values)	16 bits (65.000 nodes)	N/A	4 bits (Max 16 PLMNs)	Max number of PLMN IDs broadcast in NR is 12. This profile may be applicable for any NG-RAN RAT.
3	24 bits (16 million values)	16 bits (65.000 nodes)	N/A	N/A	Reduced node address to maximise addressable UE contexts. This profile may be applicable for any NG-RAN RAT.

Samsung Exhibit 1011, Page 92 of 97

Annex D (informative): SPID ranges and mapping of SPID values to cell reselection and inter-RAT/inter frequency handover priorities

The SPID values are defined in Annex I of TS 36.300 [2].

From the SPID reference values, only the SPID=253 also applies for 5GC.

Samsung Exhibit 1011, Page 93 of 97

Annex E (informative): Change history

Change history							
Date	**Meeting**	**TDoc**	**CR**	**Rev**	**Cat**	**Subject/Comment**	**New Version**
2017.03	RAN2 97bis	R2-1702627	-	-	-	First version.	0.1.0
2017.04	RAN2 97bis	R2-1703825	-	-	-	Editorial Updates: - Stage 2 Details of ARQ operation marked as FFS - Placeholder for CU/DU Split overview added - Outdated editor notes removed - Protocol Architecture updated - NG-RAN terminology aligned - Header placement in the L2 overview put as FFS	0.1.1
2017.04	RAN2 97bis	R2-1703952	-	-	-	Editorial Updates: - description of measurements for mobility clarified - some cell reselection details put FFS - outdated references removed	0.1.2
2017.04	RAN2 98	R2-1704296	-	-	-	Editorial updates: - NG interfaces naming aligned to RAN3 - 5GC used consistently - Statement on lossless delivery removed from 9.3.2 - Overview of PDCP function for CP detailed	0.1.3
2017.05	RAN2 98	R2-1704298	-	-	-	Agreements of RAN2#97bis captured: - overview of duplication operation - RLC modes for DRBs and SRBs - Condition for lossless mobility - L2 handling at handover - RLF triggers - Measurement details (filtering, beams, quality…) - QoS flow handling in DC - RACH procedure message usage for on-demand SI - Random Access Procedure triggers - DRX baseline	0.2.0
2017.05	RAN2 98	R2-1704452	-	-	-	RAN3 agreements captured (R3-171329) 5G logo and specification title updated	0.2.1
2017.05	RAN2 98	R2-1705994	-	-	-	RLC failure for RLF generalized.	0.3.0
2017.06	RAN2 98	R2-1706204	-	-	-	Agreements of RAN2#98 captured: - Duplication Control - RLC mode for SRB0 and System Info - Provision of Assistance Info for AMF Selection - QoS Handling from R2-1706011 - Beam measurements combining - MSG1 request details for on-demand SI - RNA and RLAU terminology introduced for INACTIVE - Skipping of SPS resources when nothing to transmit - Duplication detection at RLC only for AM - Provision of access category by NAS for connection control Editorial updates in addition: - QFI used consistently	0.3.1
2017.06	RAN2 98	R2-1706205	-	-	-	RAN3 agreements captured (R3-171932)	0.4.0
2017.06	RAN2 98	R2-1706206	-	-	-	Corrections: - provision of AC in INACTIVE is FFS - agreements on measurement moved from 9.2.1.1 to 9.2.4	0.4.1
2017.06	NR Adhoc 2	R2-1706540	-	-	-	Editorial corrections Agreement on RLC Segmentation captured Duplicated statement in 9.2.1.1. and 7.3 removed	0.5.0

Samsung Exhibit 1011, Page 94 of 97

2017.08	RAN2 99	R2-1707748	-	-	-	Agreements of RAN2 NR June Adhoc captured: - TP on Security in R2-1707466 - TP on Measurement Model in R2-1707480 - NCR Acronym addition - Duplication control details - UE capabilities and band combinations - Disabling of PDPC reordering as PDCP function - On-Demand SI and RACH details - Measurement Report Characteristics - Mapping rules update handling - UE Capabilities and Band Combination handling In addition: - ARQ overview aligned with Stage 3 agreements - L2 Data Flow aligned with Stage 3 agreements - References updated RAN3 TP incorporated (R3-172610)	0.6.0
2017.08	RAN2 99	R2-1709937	-	-	-	Agreements of RAN2 99 captured: - QoS update in R2-1709830 - Description of the RRC states in R2-1707690 - Correction on RRC_INACTIVE state in R2-1709833 - LCP description in R2-1709829 - Baseline HO procedure update in R2-1709850 with corrections - UE identities in R2-1709868 - Radio Link Failure handling in R2-1709870 - RAN3 agreements on roaming restrictions in R3-172655 - Integrity protection configurable on a per DRB basis - Various Acronyms added - Slicing details - PWS basic principles - UE capability restrictions	0.7.0
2017.09	RAN 77	RP-171730	-	-	-	Provided for information to RAN	1.0.0
2017.10	RAN2 99bis	R2-1710693	-	-	-	Editorial Updates and Corrections: - inter RAT mobility in 9.3.2 restructured - SON promoted to top subclause level (as it is not a vertical) - Obsolete subclauses 14 and 15 removed. - Description of paging in idle aligned with 23.501 - I-RNTI suggested for INACTIVE - Missing agreement from RAN2 99 on INACTIVE captured	1.0.1
2017.10	RAN2 99bis	R2-1711936	-	-	-	Clean version	1.1.0
2017.10	RAN2 99bis	R2-1711972	-	-	-	Corrections: - Container for mobility in 9.2.3.2.1 - "HO" changed to "handover" for consistency Agreements from RAN2 99bis captured: - URLLC text in R2-1710253 - Clarification on RRC States in R2-1710074 - Resume ID terminology in R2-1711778 - Slicing clarifications in R2-1712034 - Usage of SRB0 and SRB1 in INACTIVE - Prioritisation of RACH resources for handover - SPS configuration per SCell in CA - Enabling / Disabling IP on DRB via handover only - First agreements on Supplementary Uplink - Maximum supported data rate calculation RAN3 agreements: - R3-173639 on Rapporteur updates to RAN3-related sections - R3-174162 on AMF discovery by NG-RAN - R3-174187 on RAN paging failure handling in RRC_INACTIVE - R3-174188 on Unreachability in RAN Inactive State - R3-174225 on Inter System Handover - R3-174230 on RRC Inactive Assistant Information RAN agreement: - RP-172113 on UE categories.	1.1.1
2017.11	RAN2 100	R2-1712266	-	-	-	Clean version	1.2.0
2017.11	RAN2 100	R2-1712355	-	-	-	Editorial Clean Up: - Editor's Notes & relevant FFS moved to R2-17112357 - Protocol stack figures for NG interface updated - Dual Connectivity changed to Multi-RAT connectivity - Details about SI handling added to tackle RMSI - Access Control updated and reference to 22.261 added - DC specific details removed (37.340 is used instead) - Notes numbered wherever required	1.2.1

Samsung Exhibit 1011, Page 95 of 97

2017.12	RAN2 100	R2-174079	-	-	-	Agreements from RAN2 100 captured: - QoS update in R2-1714230 - Updates to stage 2 QoS flow in R2-1712687 - BWP Description in R2-172360 - Transition from INACTIVE to CONNECTED in R2-173937 - SUL overview - Removal of DC related definitions - BWP agreements - SPS terminology changed to CS to cover both types RAN3 agreements in R3-175011 RAN1 agreements in R1-1721728	1.2.2
2017.12	RAN2 100	R2-1714252	-	-	-	Clean version	1.3.0
2017.12	RP-78	RP-172496	-	-	-	Provided for approval to RAN	2.0.0
2017/12	RP-78					Upgraded to Rel-15 (MCC)	15.0.0
2018/03	RP-79	RP-180440	0009	1	F	Miscellaneous Corrections & Additions	15.1.0
2018/06	RP-80	RP-181214	0010	1	F	Clarification on NR Carrier Aggregation	15.2.0
	RP-80	RP-181214	0011	2	F	Miscellaneous Corrections	15.2.0
	RP-80	RP-181214	0012	1	F	Paging Mechanisms	15.2.0
	RP-80	RP-181214	0013	2	F	Security Update	15.2.0
	RP-80	RP-181214	0014	1	F	UE Identities	15.2.0
	RP-80	RP-181214	0015	1	F	Corrections on deactivation of PUCCH SCell	15.2.0
	RP-80	RP-181214	0022	2	F	Clarification on count wrap around	15.2.0
	RP-80	RP-181214	0024	1	F	Slicing assistance information	15.2.0
	RP-80	RP-181214	0025	-	F	Physical Layer Update	15.2.0
	RP-80	RP-181214	0026	1	F	Default DRB & QoS Remapping	15.2.0
	RP-80	RP-181214	0027	1	F	SSB Clarifications	15.2.0
	RP-80	RP-181217	0029	2	B	CR on U-plane handling for handover	15.2.0
	RP-80	RP-181217	0030	2	B	CR on message content in inter-RAT handover	15.2.0
	RP-80	RP-181215	0032	1	F	Clarifications on (de)activation of Duplication and (de)activation of SCells	15.2.0
	RP-80	RP-181216	0033	2	B	Introduce ANR in NR	15.2.0
	RP-80	RP-181215	0036	1	F	Corrections to Unified Access Control	15.2.0
	RP-80	RP-181215	0040	-	F	Correction to TS 38.300 on Open Issues for Handover	15.2.0
	RP-80	RP-181216	0041	-	B	Baseline CR for June version of RAN2 TS 38.300 (RAN3 part) covering agreements of RAN3#100	15.2.0
	RP-80	RP-181216	0042	-	B	Delay budget report and MAC CE adaptation for NR for TS 38.300	15.2.0
2018/09	RP-81	RP-181941	0035	3	B	ECN support in NR	15.3.0
	RP-81	RP-181938	0043	2	D	Miscellaneous Clean Up and Corrections	15.3.0
	RP-81	RP-181938	0045	1	F	Mobility Call Flows	15.3.0
	RP-81	RP-181938	0046	2	F	QoS Handling Corrections	15.3.0
	RP-81	RP-181938	0047	4	F	MDBV Enforcement	15.3.0
	RP-81	RP-181939	0050	1	F	Completion of description of power saving	15.3.0
	RP-81	RP-181940	0051	1	F	Correction to description of bandwidth adaptation	15.3.0
	RP-81	RP-181939	0053	1	F	Clarification of PDCP functionality	15.3.0
	RP-81	RP-181939	0062	2	F	Clarification on number of CC for NR CA	15.3.0
	RP-81	RP-181938	0070	1	F	Beam management, failure detection and recovery	15.3.0
	RP-81	RP-181941	0071	-	F	System Information Handling in TS38.300	15.3.0
	RP-81	RP-181941	0072	1	F	Correction on RRC Resume procedure	15.3.0
	RP-81	RP-181940	0077	-	F	CR on RACH configuration during HO	15.3.0
	RP-81	RP-181941	0078	1	F	Missing Call Flows	15.3.0
	RP-81	RP-181942	0079	1	F	CN type indication for Redirection from NR to E-UTRA	15.3.0
	RP-81	RP-181942	0080	1	F	QoS Flow to DRB Remapping during Handover	15.3.0
	RP-81	RP-181941	0081	1	F	NR Corrections (38.300 Baseline CR covering RAN3-101 agreements)	15.3.0
2018/10	-	-	-	-	-	Changes of CR0035 rev 3 were undone since this CR was actually not approved by RAN #81 as it was not submitted to RAN #81	15.3.1
2018/12	RP-82	RP-182656	0028	5	F	Slice Aware Access Control	15.4.0
	RP-82	RP-182649	0035	4	B	ECN support in NR	15.4.0
	RP-82	RP-182653	0074	2	F	Corrections to System Information	15.4.0
	RP-82	RP-182655	0075	2	F	Stage2 Corrections on UE capability	15.4.0
	RP-82	RP-182657	0083	3	F	Clarifications on dynamic scheduling	15.4.0
	RP-82	RP-182658	0084	2	F	Clarification of AMF Switch in RRC_INACTIVE	15.4.0
	RP-82	RP-182657	0086	2	F	Correction to the system information in Handover Request message	15.4.0
	RP-82	RP-182654	0087	2	F	Capture signalling flows where the last serving gNB moves the UE to RRC_IDLE	15.4.0
	RP-82	RP-182649	0088	2	F	Scheduling Request Overview	15.4.0
	RP-82	RP-182649	0089	1	F	System Information Provisioning	15.4.0
	RP-82	RP-182657	0090	3	F	Transport of NAS Messages	15.4.0
	RP-82	RP-182649	0091	2	F	SON Overview	15.4.0
	RP-82	RP-182649	0093	2	F	RDI handling for data forwarding at handover	15.4.0
	RP-82	RP-182656	0095	2	F	Clarification on basic voice support	15.4.0
	RP-82	RP-182659	0096	2	F	Relation between SSB and SS-Burst	15.4.0

Samsung Exhibit 1011, Page 96 of 97

	RP-82	RP-182659	0097	3	F	Defining inter-system and intra-system handover	15.4.0
	RP-82	RP-182659	0099	3	F	Correction regarding key deletion at state transition to RRC_IDLE	15.4.0
	RP-82	RP-182656	0102	2	F	Clarification on SSB-based BM, RLM and BFD	15.4.0
	RP-82	RP-182653	0103	1	F	Correction to beam failure detection in Stage-2	15.4.0
	RP-82	RP-182655	0106	2	F	Random Access Triggers	15.4.0
	RP-82	RP-182649	0107	-	F	Correction of BWP adaptation	15.4.0
	RP-82	RP-182657	0108	1	F	Notification Control	15.4.0
	RP-82	RP-182665	0109	1	F	PDU Session AMBR	15.4.0
	RP-82	RP-182649	0110	-	F	Logical channel restrictions clarifications and correction	15.4.0
	RP-82	RP-182666	0111	2	F	CORESET#0	15.4.0
	RP-82	RP-182659	0115	2	F	Corrections to activation of SCells	15.4.0
	RP-82	RP-182657	0116	1	F	Description of RLM aspects	15.4.0
	RP-82	RP-182651	0120	-	F	Minor corrections to paging	15.4.0
	RP-82	RP-182659	0125	1	F	Clarification on power ramping counter	15.4.0
	RP-82	RP-182658	0127	1	F	Corrections on the descriptions of active BWP	15.4.0
	RP-82	RP-182653	0131	-	F	Stage 2 Correction on Mobility in RRC_IDLE	15.4.0
	RP-82	RP-182660	0133	1	F	Stage 2 CR on Measurement gap configuration scenarios	15.4.0
	RP-82	RP-182659	0134	1	F	CR on the carrier selection for random access	15.4.0
	RP-82	RP-182659	0137	1	F	Corrections on Multi-Radio dual connectivity	15.4.0
	RP-82	RP-182670	0138	2	F	Inter-system HO	15.4.0
	RP-82	RP-182787	0139	-	F	Baseline CR for TS 38.300	15.4.0
	RP-82	RP-182799	0140	-	B	Addition of Annex X for SPID ranges	15.4.0
2019/03	RP-83	RP-190542	0142	2	F	RRC Reject Handling for MPS and MCS	15.5.0
	RP-83	RP-190540	0143	-	F	Misalignments with other Specifications	15.5.0
	RP-83	RP-190543	0146	2	F	RLF triggering when RLC reaches maximum number of retransmission	15.5.0
	RP-83	RP-190543	0147	1	F	Correction on RLC modes for duplication	15.5.0
	RP-83	RP-190545	0148	1	F	Correction of Data Forwarding over Xn	15.5.0
	RP-83	RP-190544	0149	-	F	Correction to RNAU without context relocation	15.5.0
	RP-83	RP-190544	0150	-	F	Correction of handling of PDCP SN during Data Forwarding	15.5.0
	RP-83	RP-190545	0151	1	F	Correction of stage 2 for slicing	15.5.0
	RP-83	RP-190544	0152	-	F	Energy Saving Support in R15	15.5.0

Samsung Exhibit 1011, Page 97 of 97