US007913871B2

(12) **United States Patent**
Fisher

(10) **Patent No.: US 7,913,871 B2**
(45) **Date of Patent: Mar. 29, 2011**

(54) **GARBAGE CAN AND SUPPORT FOR USE WITH A LINER**

(76) Inventor: **Jack D. Fisher**, Glendale, AZ (US)

(*) Notice: Subject to any disclaimer, the term of this patent is extended or adjusted under 35 U.S.C. 154(b) by 512 days.

(21) Appl. No.: **11/835,293**

(22) Filed: **Aug. 7, 2007**

(65) **Prior Publication Data**

US 2008/0023480 A1 Jan. 31, 2008

Related U.S. Application Data

(63) Continuation-in-part of application No. 11/318,730, filed on Dec. 27, 2005, now abandoned.

(51) **Int. Cl.**
B65D 25/14 (2006.01)
B65D 35/14 (2006.01)
B65D 8/04 (2006.01)

(52) **U.S. Cl.** **220/495.06**; 220/495.11; 220/625; 220/908.1

(58) **Field of Classification Search** 220/495.06, 220/495.08, 495.11, 610, 611, 625, 908.1
See application file for complete search history.

(56) **References Cited**

U.S. PATENT DOCUMENTS

1,879,410	A	9/1932	Morris et al.	
3,915,329	A	10/1975	Zaks	220/65
3,997,072	A	12/1976	Guth	220/1
4,014,157	A	3/1977	Pearce	53/35
4,027,774	A	6/1977	Cote	220/63
4,167,271	A	9/1979	Jorgensen	280/79.1
4,222,580	A	9/1980	Krokonko	280/47.34
4,254,602	A	3/1981	Boynton	53/390
4,279,357	A *	7/1981	Robinson	220/318
4,294,379	A	10/1981	Bard	220/404
4,440,321	A	4/1984	Campbell et al.	222/153
4,457,483	A	7/1984	Gagne	248/97
4,643,380	A	2/1987	Copeland	248/97
4,842,228	A	6/1989	Kasper	248/97
5,123,562	A	6/1992	Bullard et al.	220/334
5,226,554	A	7/1993	Dauphinais	220/402
5,228,591	A	7/1993	Jones	220/528
5,295,606	A	3/1994	Karwoski	220/403
5,375,732	A	12/1994	Bowers et al.	220/404
5,419,453	A	5/1995	Lochridge	220/404
5,645,186	A	7/1997	Powers et al.	220/404
5,716,033	A	2/1998	Gibson	248/95
5,862,932	A	1/1999	Walsh et al.	220/8
5,884,556	A	3/1999	Klepacki et al.	100/53
5,950,251	A *	9/1999	Cost et al.	4/483
6,015,063	A	1/2000	Poliquin	220/495.04
6,109,002	A	8/2000	McCabe	53/390
6,142,325	A	11/2000	Chomik	215/343
6,253,949	B1	7/2001	Dickson	220/495.04
6,296,138	B1	10/2001	Hannah et al.	220/495.08

(Continued)

Primary Examiner — Anthony Stashick
Assistant Examiner — Harry A Grosso
(74) *Attorney, Agent, or Firm* — Kunzler Needham Massey & Thorpe

(57) **ABSTRACT**

An apparatus and method for releasably supporting a liner, such as a trash bag or laundry bag, within a container, such as a trash can or laundry basket. The apparatus includes a body and a base. The base includes a top opening and a bottom opening, with the area of the top opening being less than the area of the bottom opening. The base is releaseably attachable to the body using a compliant latch. Additionally, the body gradually slopes inward from the bottom opening to the top opening. The body is configured to receive a liner, which removably fits inside the body to protect the body from direct contact with soiled objects.

21 Claims, 18 Drawing Sheets

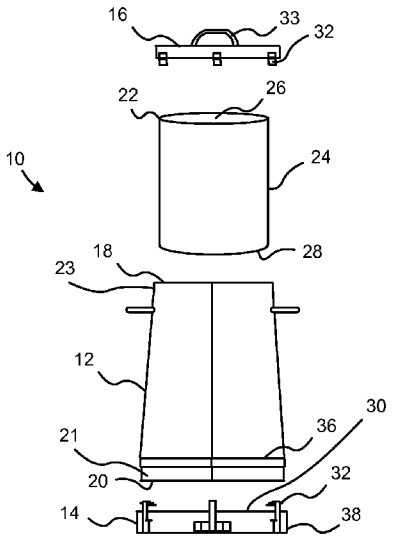

U.S. PATENT DOCUMENTS

6,474,495	B1	11/2002	Frei	220/495.08
6,594,876	B1	7/2003	Stastny	29/401.1
6,612,099	B2	9/2003	Stravitz	53/526
6,715,980	B2	4/2004	Bouthillier	414/642
7,500,430	B2 *	3/2009	Claflin et al.	100/90
2003/0209549	A1	11/2003	Grimes	220/495.08
2004/0065666	A1	4/2004	Walker	220/315
2006/0056741	A1 *	3/2006	Yang et al.	383/33

* cited by examiner

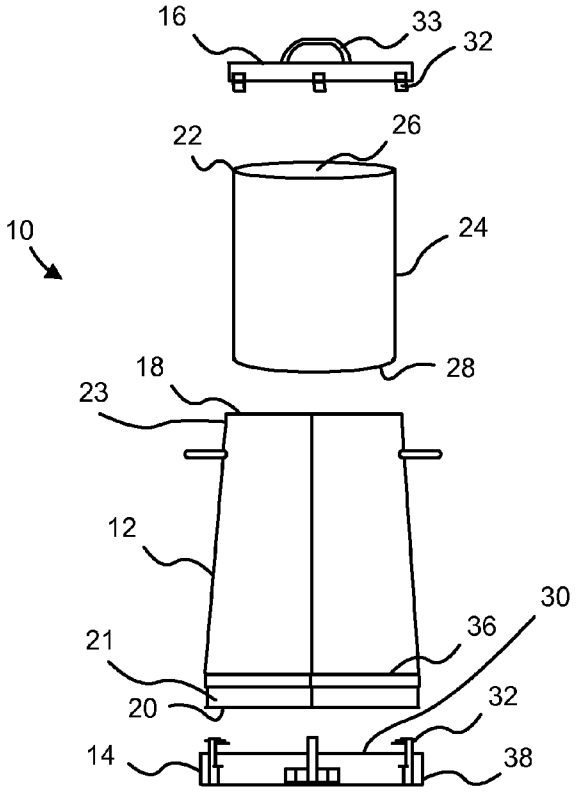

Figure 1A

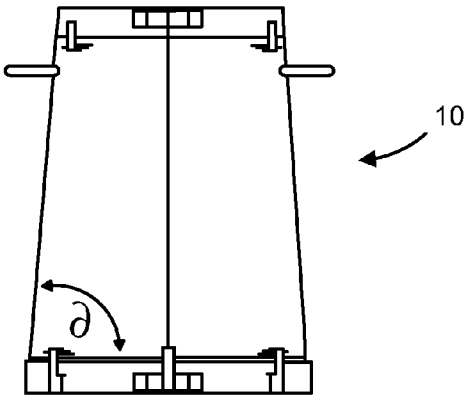

Figure 1B

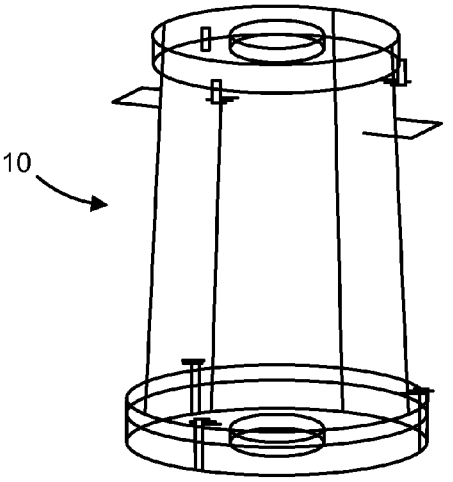

Figure 1C

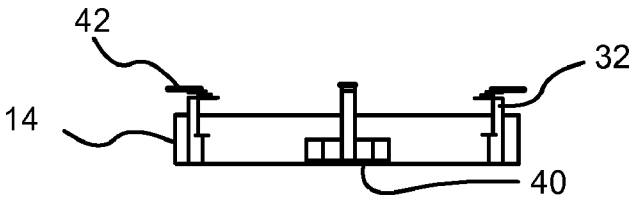

Figure 2A

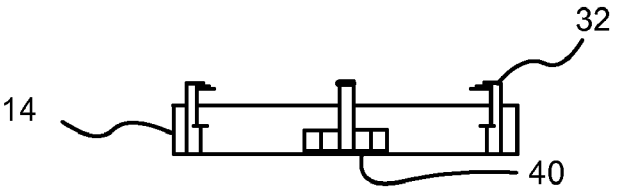

Figure 2B

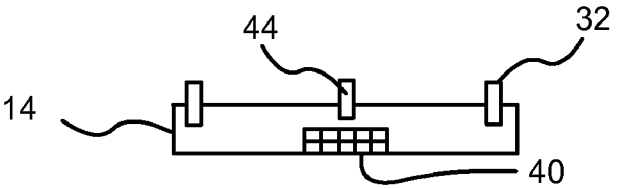

Figure 2C

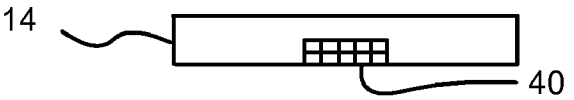

Figure 2D

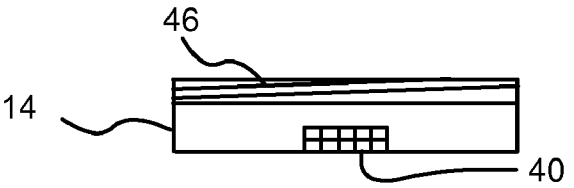

Figure 2E

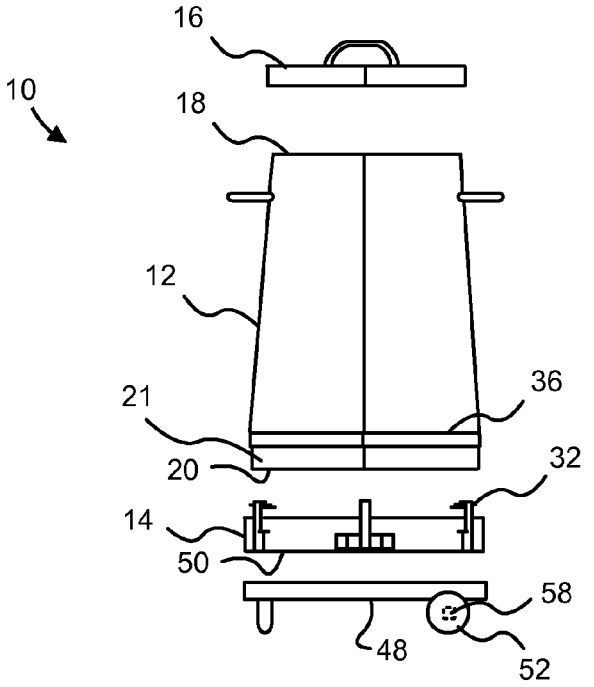

Figure 3A

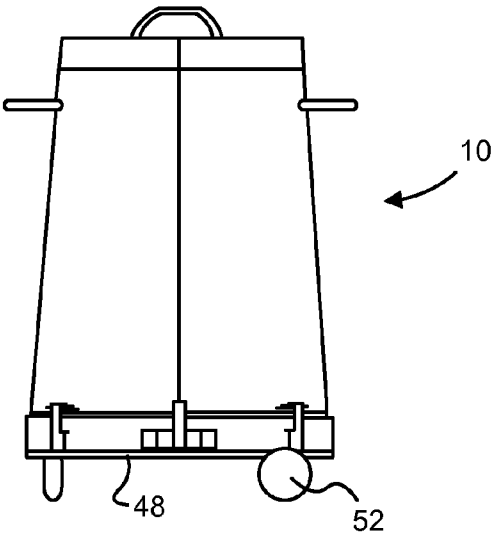

Figure 3B

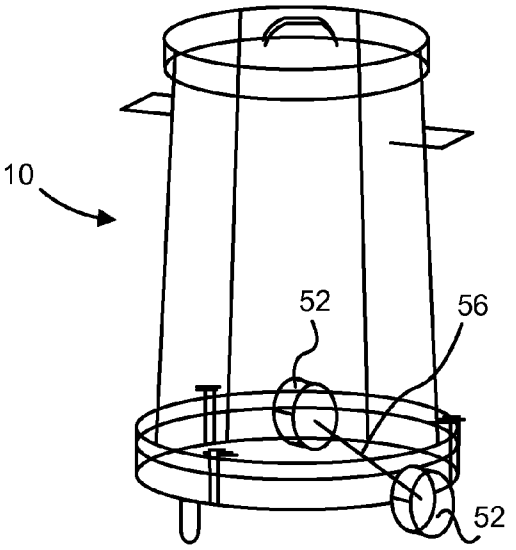

Figure 3C

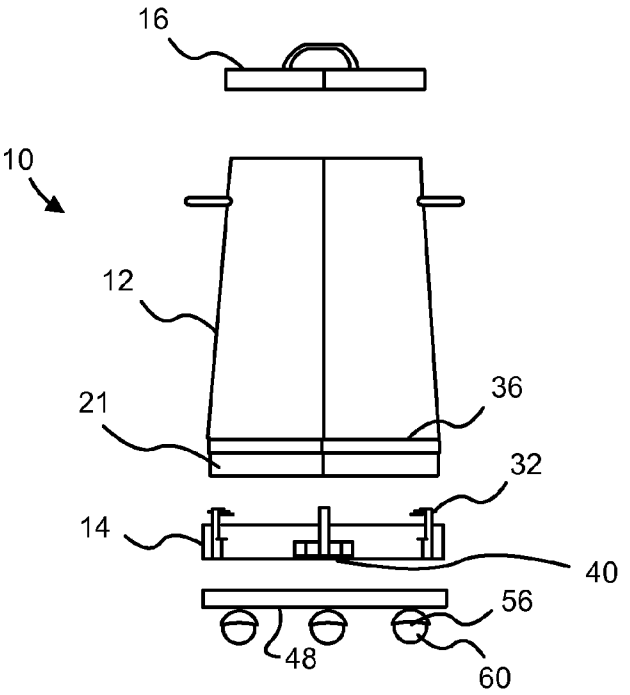

Figure 4A

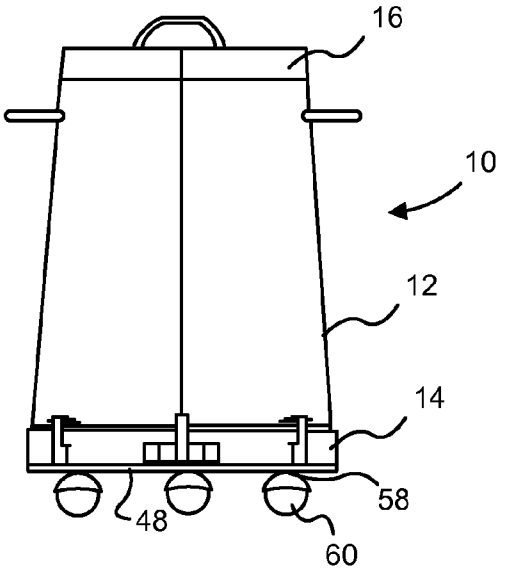

Figure 4B

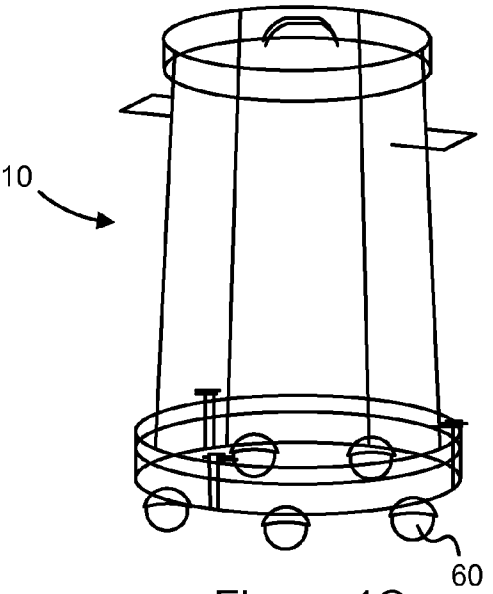

Figure 4C

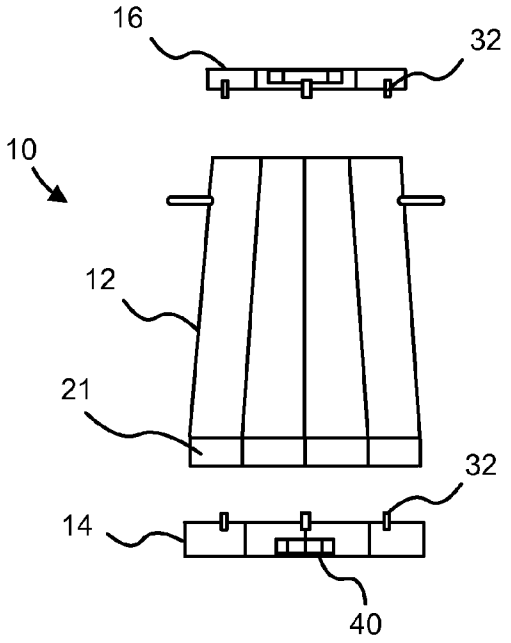

Figure 5A

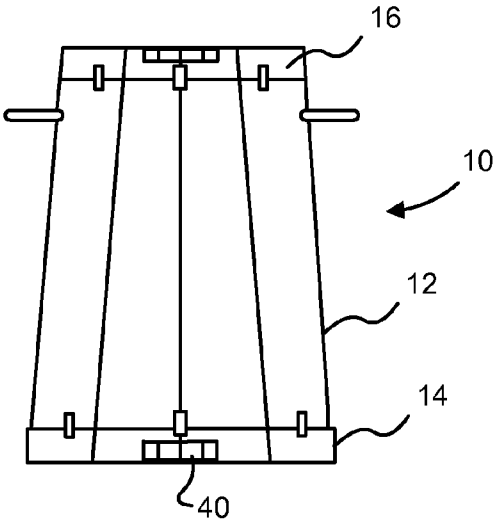

Figure 5B

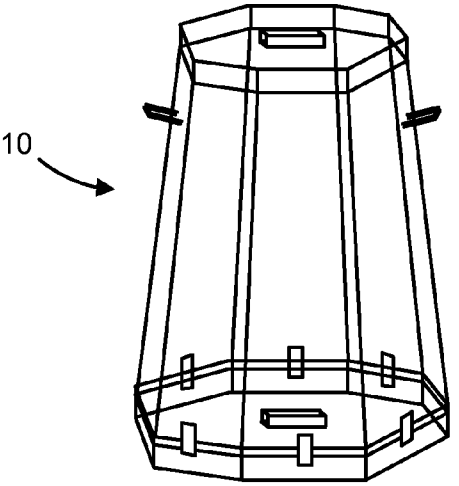

Figure 5C

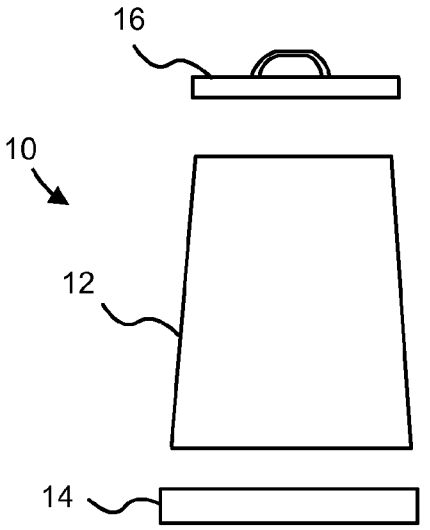

Figure 6A

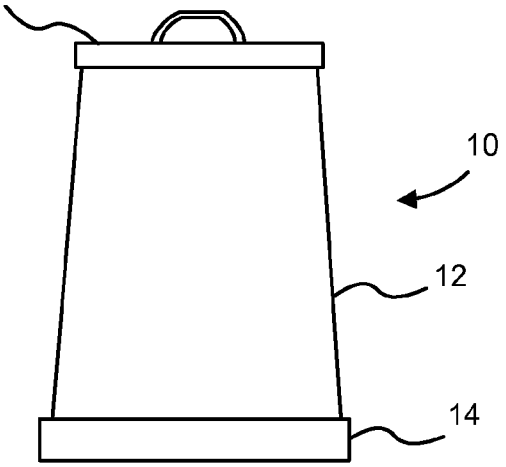

Figure 6B

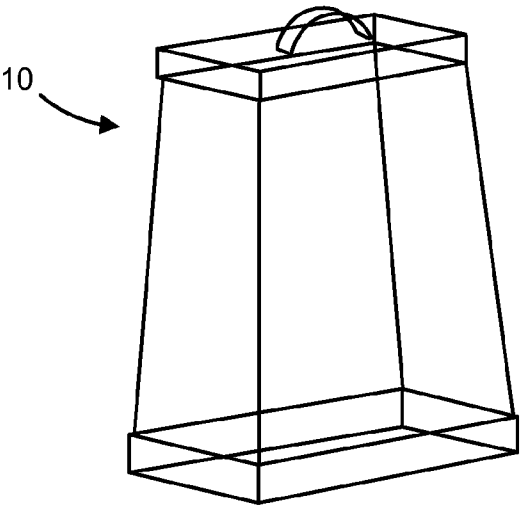

Figure 6C

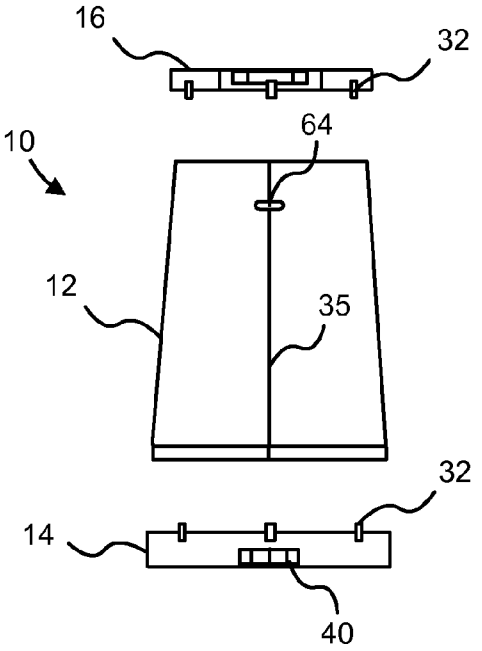

Figure 7A

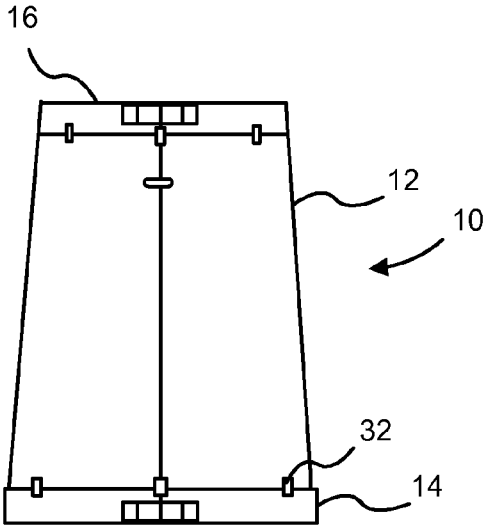

Figure 7B

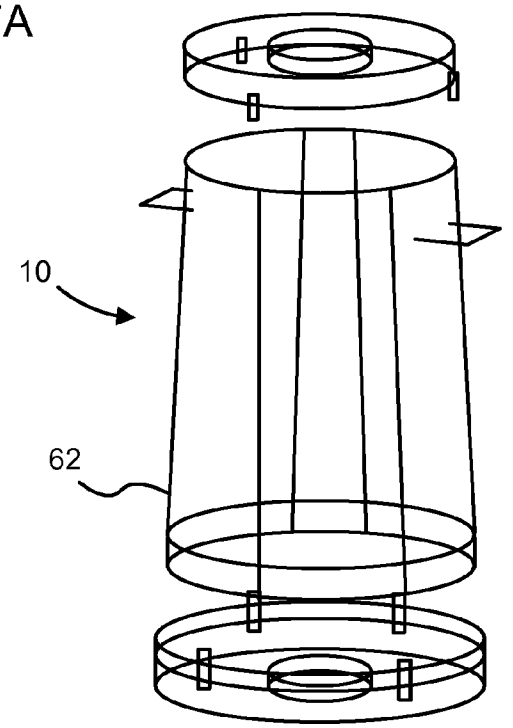

Figure 7C

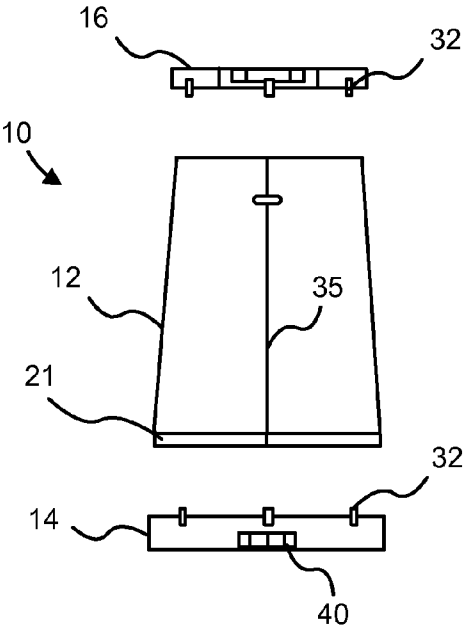

Figure 8A

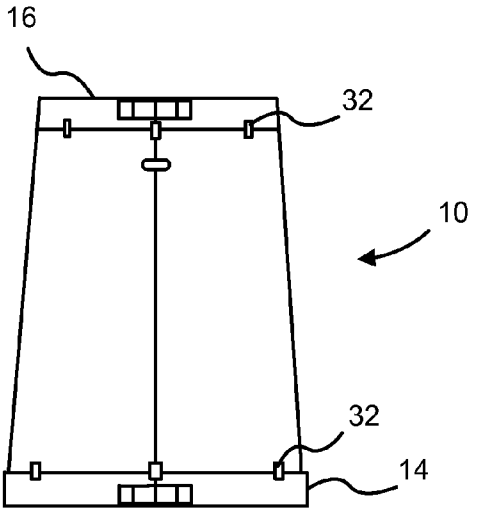

Figure 8B

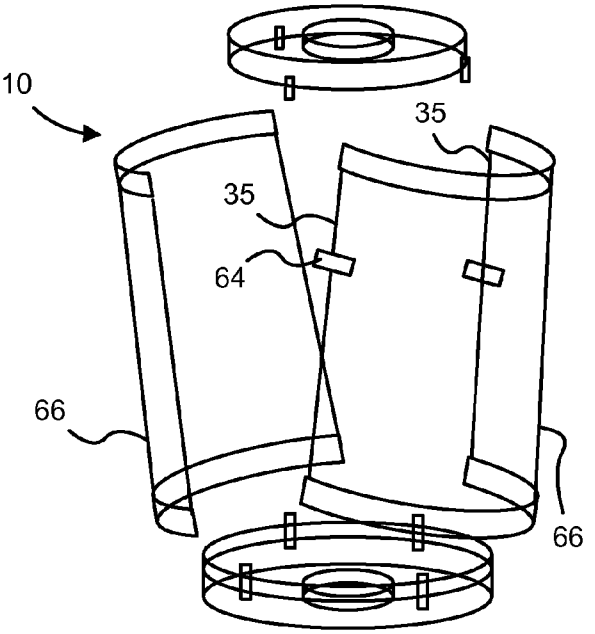

Figure 8C

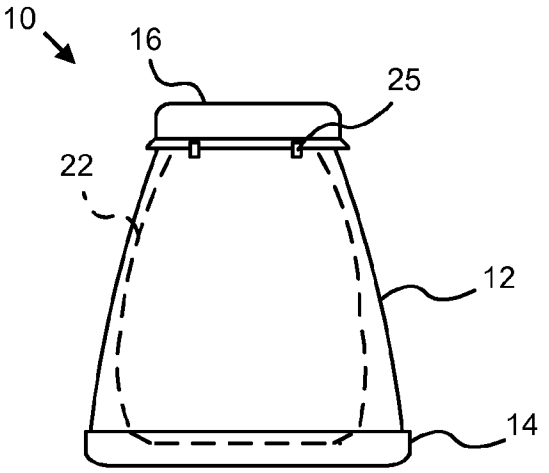

Figure 9A

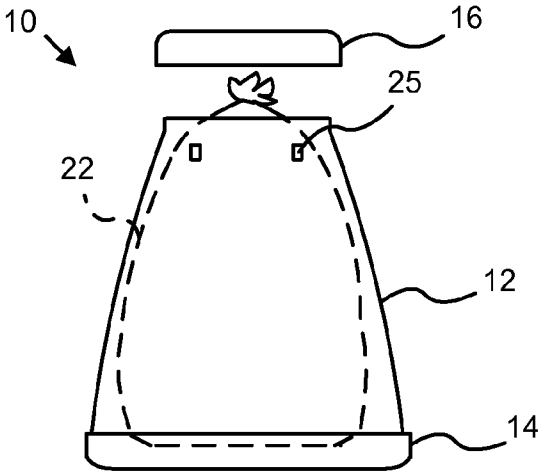

Figure 9B

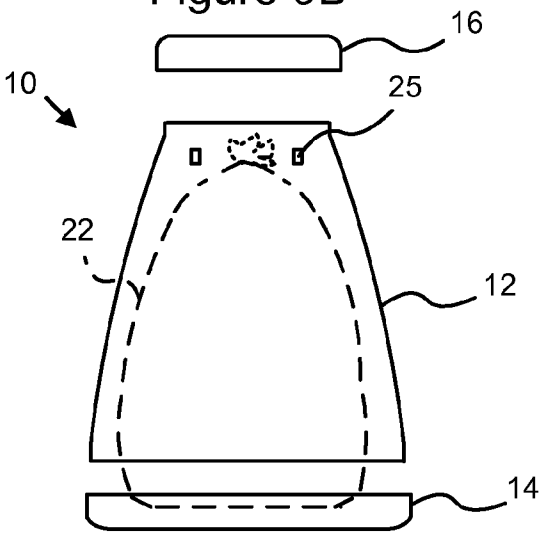

Figure 9C

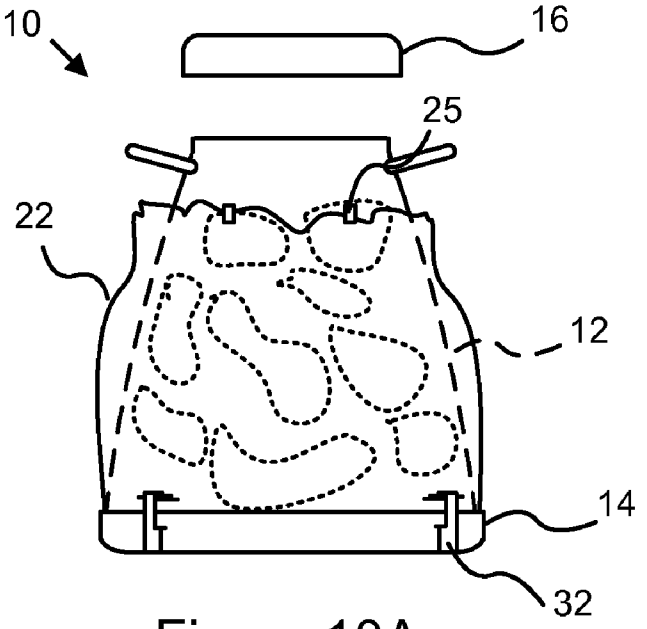

Figure 10A

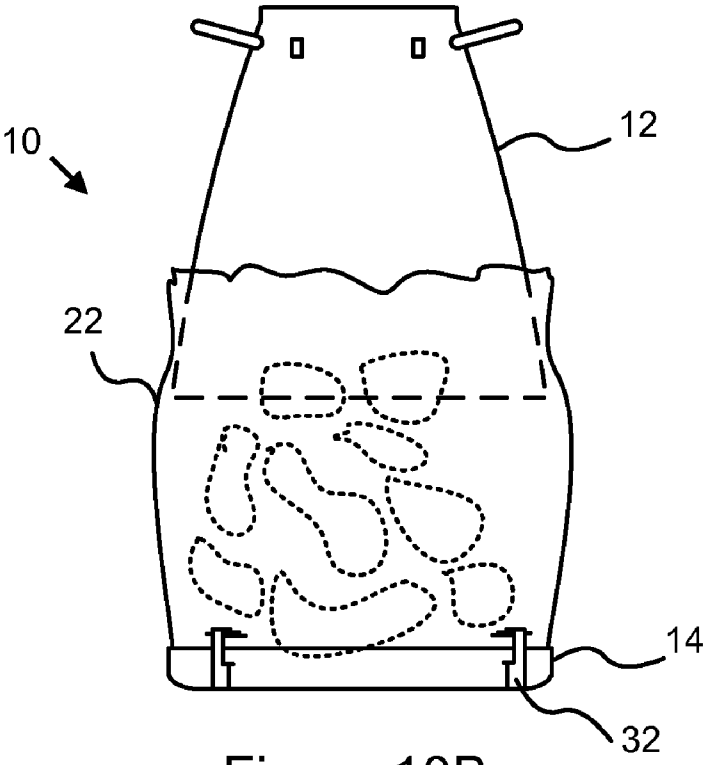

Figure 10B

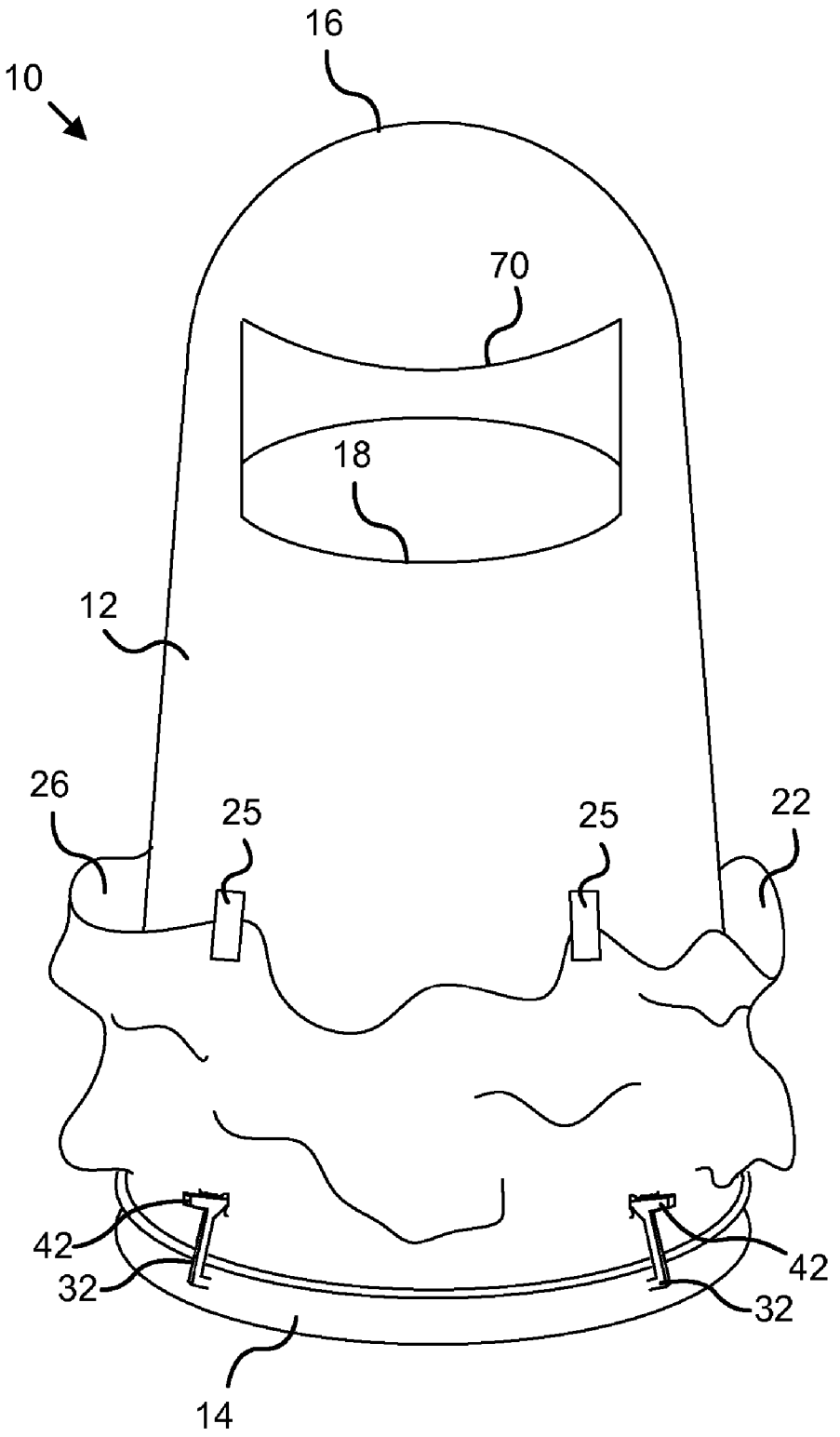

Figure 11

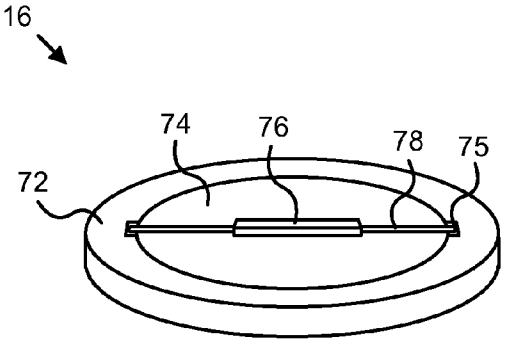

Figure 12A

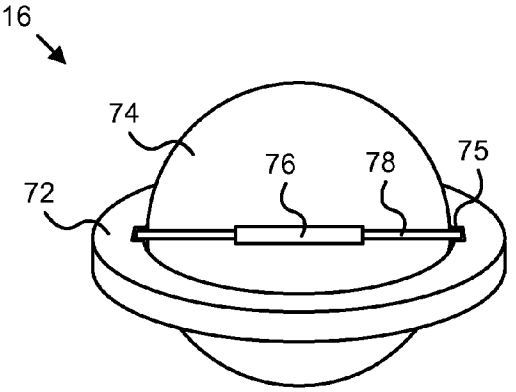

Figure 12B

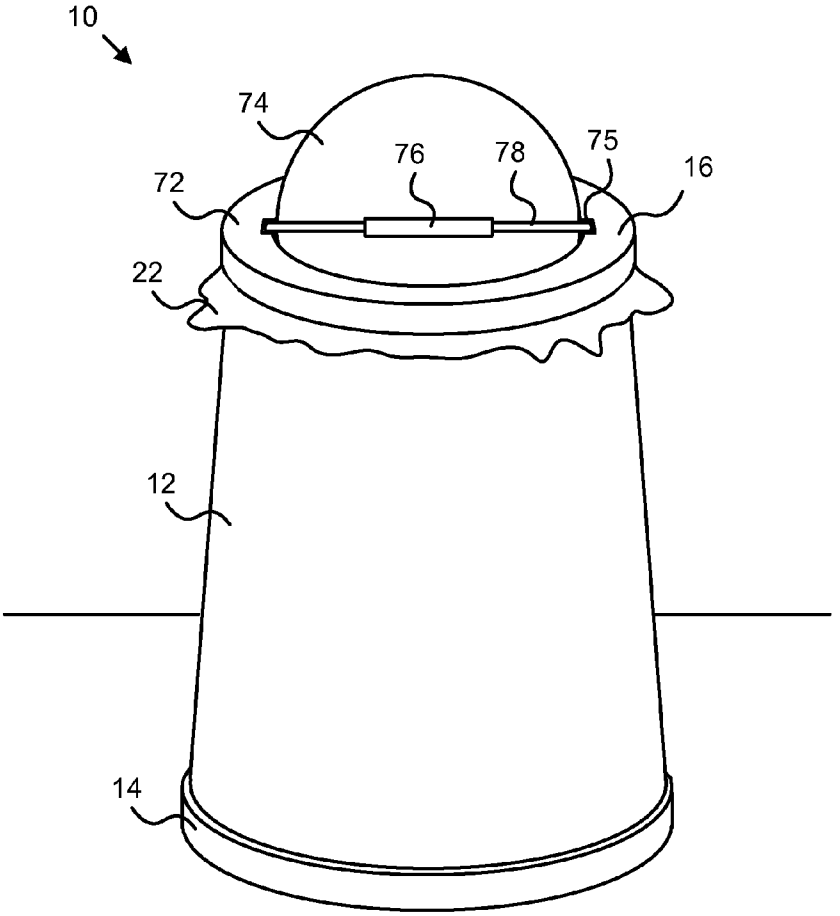

Figure 12C

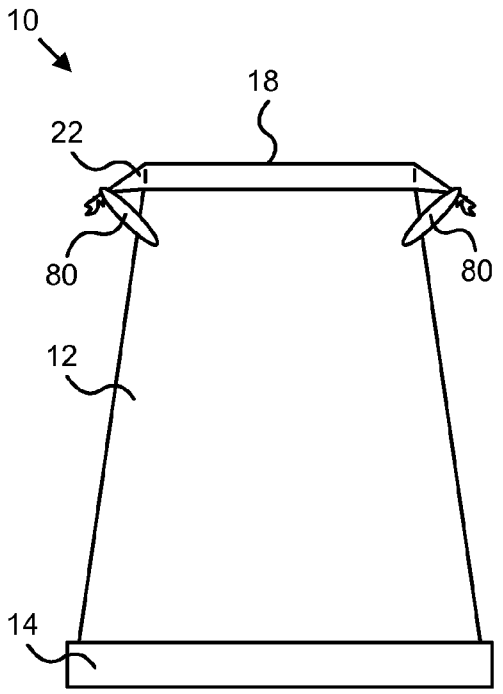

Figure 13A

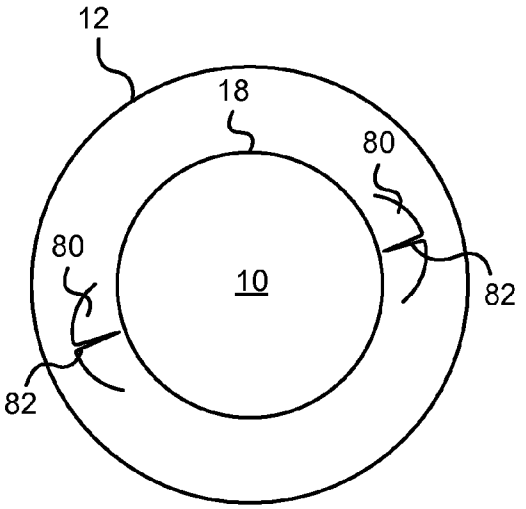

Figure 13B

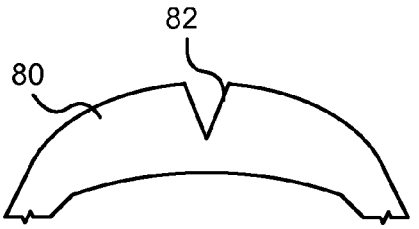

Figure 13C

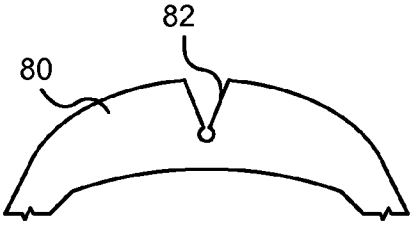

Figure 13D

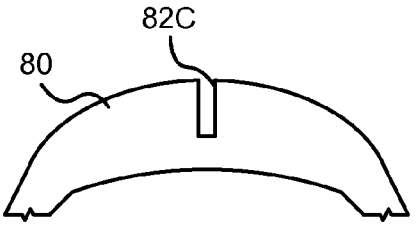

Figure 13E

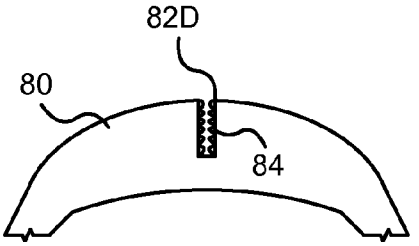

Figure 13F

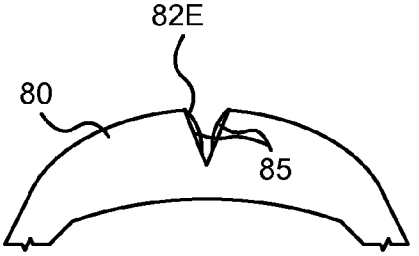

Figure 13G

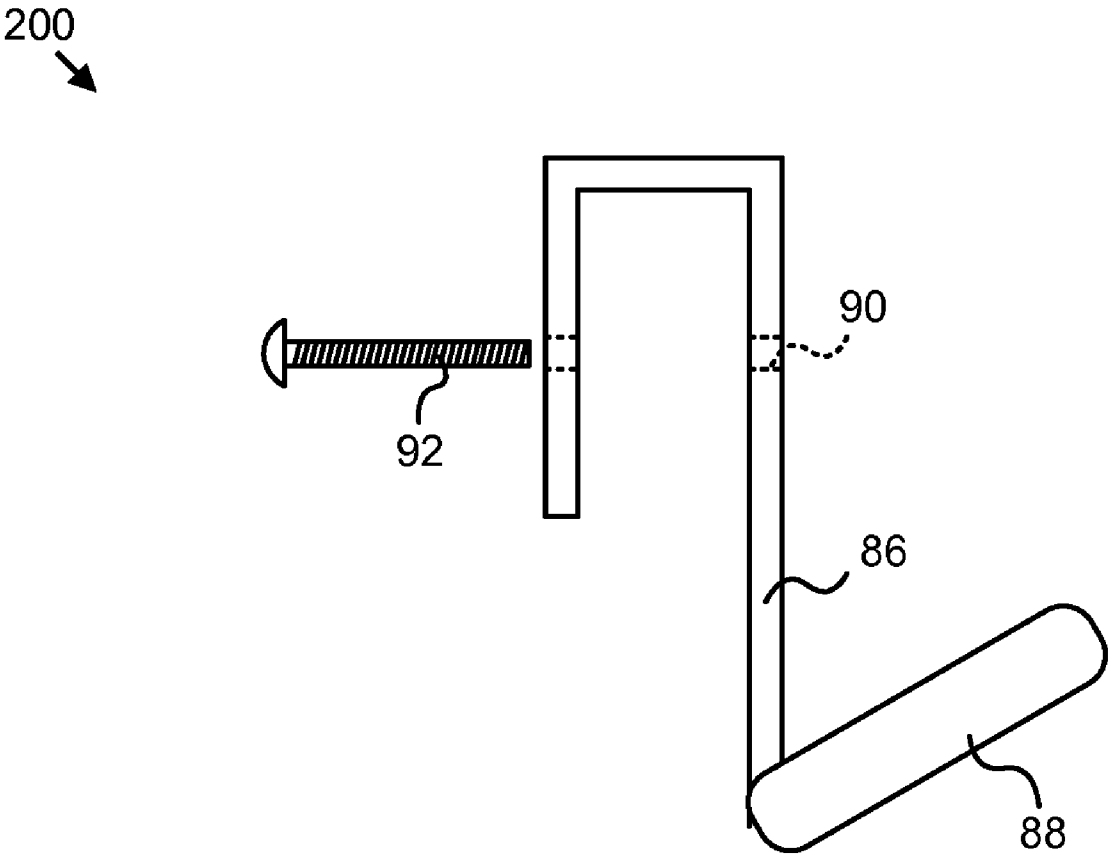

Figure 14

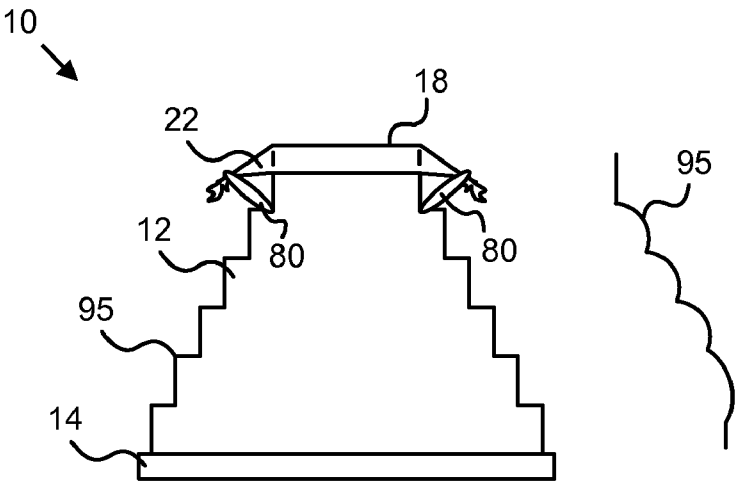

Figure 15

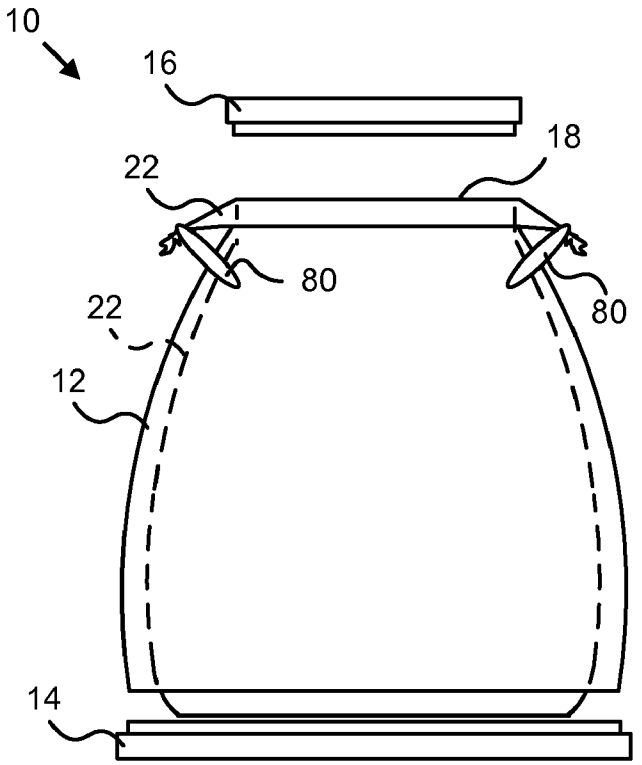

Figure 16

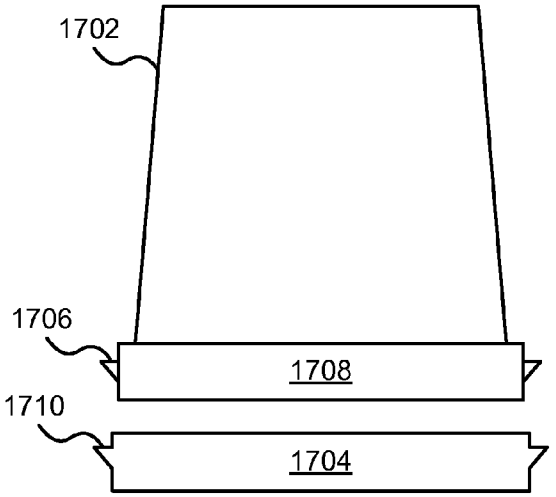

Figure 17A

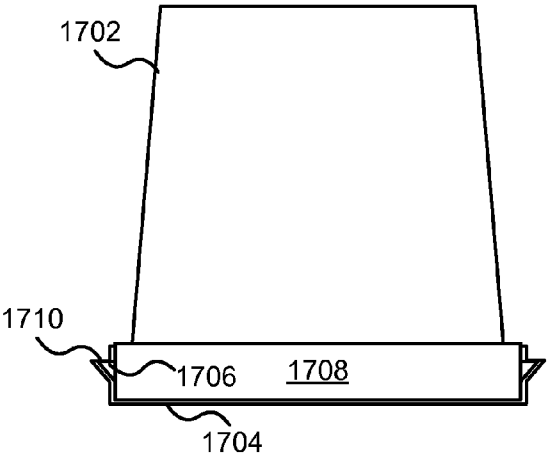

Figure 17B

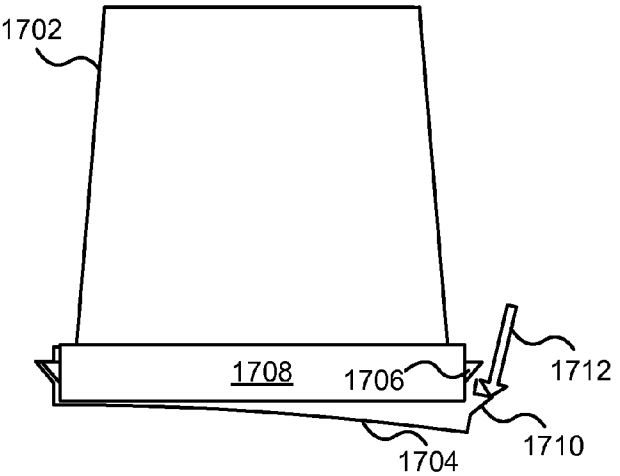

Figure 17C

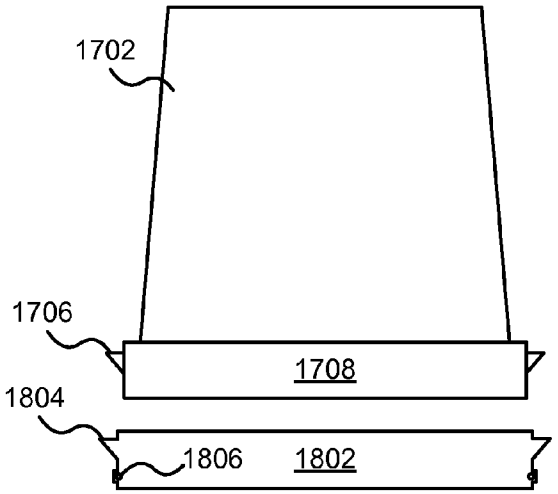

Figure 18A

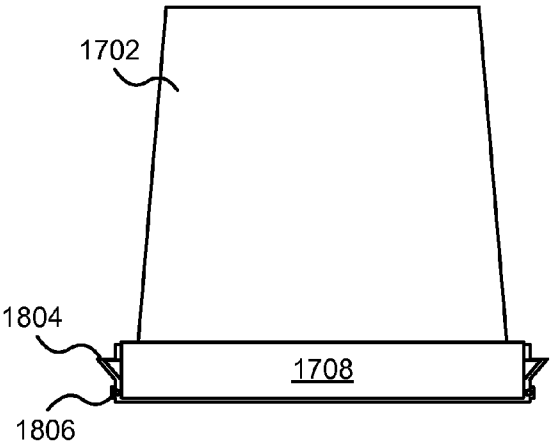

Figure 18B

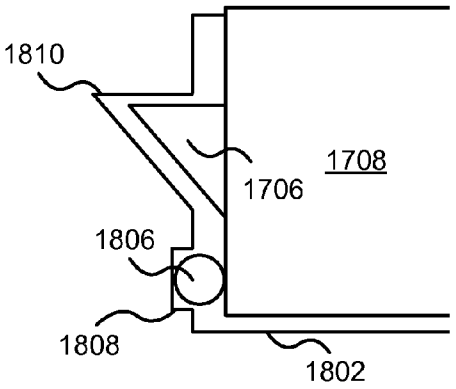

Figure 18C

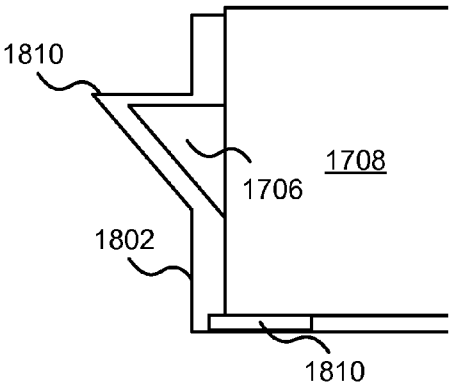

Figure 18D

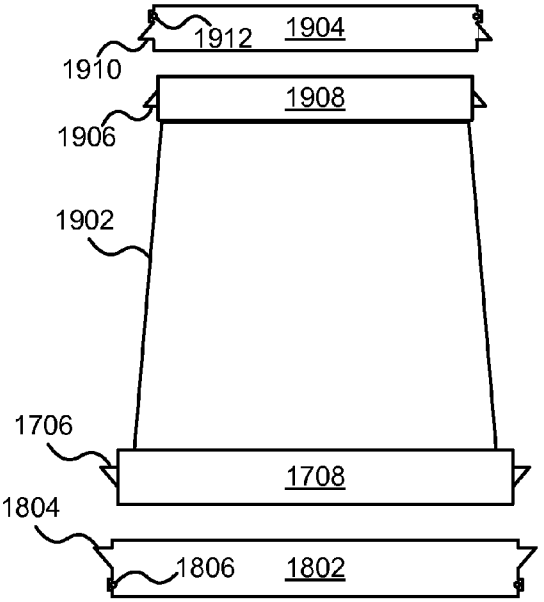

Figure 19A

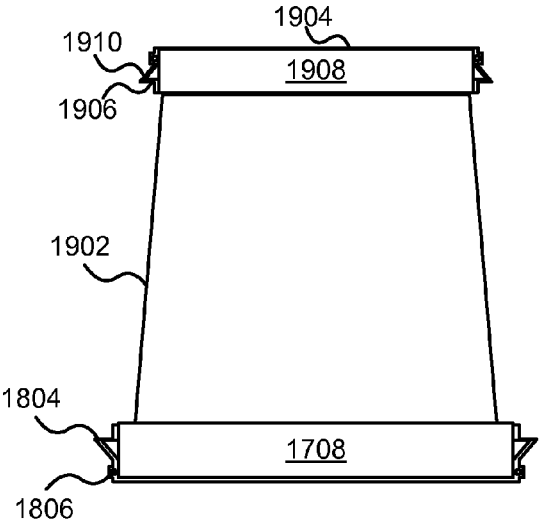

Figure 19B

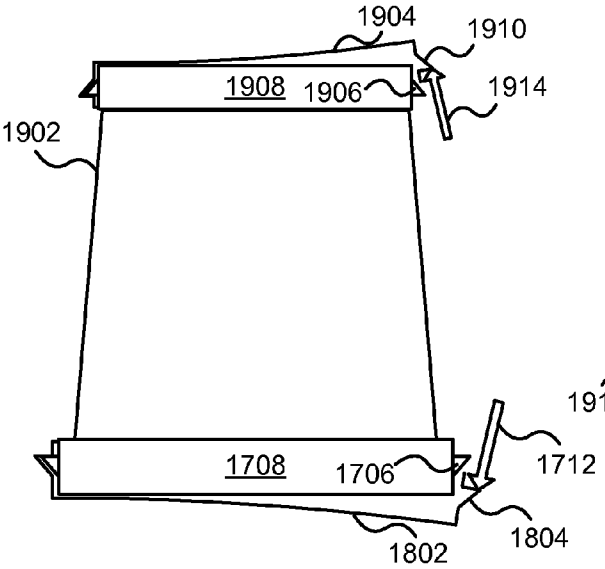

Figure 19C

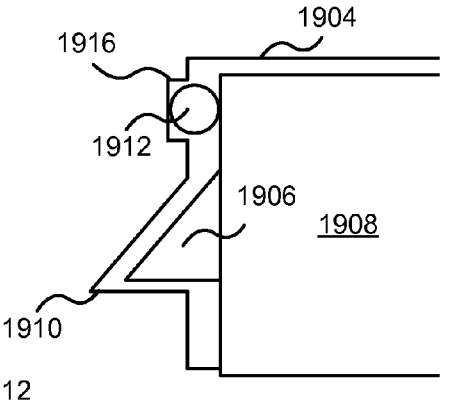

Figure 19D

GARBAGE CAN AND SUPPORT FOR USE WITH A LINER

CROSS-REFERENCES TO RELATED APPLICATIONS

This application is a continuation-in-part of and claims priority to U.S. patent application Ser. No. 11/318,730 entitled "GARBAGE CAN AND SUPPORT FOR USE WITH A LINER" and filed on Dec. 27, 2005 now abandoned for Jack Donald Fisher, which is incorporated herein by reference.

BACKGROUND OF THE INVENTION

1. Field of the Invention

This invention relates to storage containers. More particularly, the invention relates to containers that are versatile and facilitate filling and removing a liner.

2. Description of the Related Art

When utilizing a garbage can to support a plastic garbage bag having a peripheral end portion folded over the top edge of the can, the bag generally adheres to the sidewall of the can even when it is only partially loaded. It is thus often difficult to withdraw the bag due to the adherence thereof to the can sidewall as well as to the vacuum which is created between the bottom of the bag and that of the can when the bag is pulled out of the can. On the other hand, one can hardly do without a garbage can or the like to support a garbage bag, since the bag itself has no body as such and is therefore not self-supporting, and without external support the bag can be loaded only with great difficulty.

Moreover, when using plastic garbage bags, care must be taken during the loading in order to prevent sharp objects, such as scrap pieces of wood, small rocks, and the like, from piercing the bags. In addition, the presence of sharp objects typically does not permit the garbage to be compressed inside the bag since otherwise the latter would pierce, thus resulting in one not being able to load the bag to its full capacity. The same also applies to indoor use as household rubbish generally includes sharp items such as pizza boxes, broken glass, open cans, and the like.

Many garbage cans have attempted to overcome the deficiencies above by providing garbage cans that incorporate air tubes and/or air holes to decrease the amount of vacuum created when one pulls the trash bag from the garbage can. Others have created collapsible garbage cans that unwrap from the garbage bag. These garbage cans, however, suffer from additional deficiencies.

First, holes formed into the garbage can decrease the garbage can strength and liquids and smells may begin to seep there from. Secondly, collapsible garbage cans generally lack the structural integrity to adequately hold trash bags at full capacity as the collapsible garbage cans may unintentionally unwrap. Bag support devices have also been used to protect garbage bags from punctures. The bag support devices have been described as taller than the garbage bags, and use awkward, elongated handles. Because the garbage bag is pulled over the entire length of the bag support device, the garbage bag is still left unprotected from external hazards, such as bushes, shrubs, thorns, etc.

From the foregoing discussion, it should be apparent that a need exists for an apparatus and method that supports a liner and facilitates the removal and protection of the liner. The apparatus and method would enable the user to remove the liner from the container without causing suction and without puncturing the liner. Additionally, the apparatus would be easier to clean, have a greater capacity, and would capture spills.

SUMMARY OF THE INVENTION

The present invention has been developed in response to the present state of the art, and in particular, in response to the problems and needs in the art that have not yet been fully solved by currently available liner supports. Accordingly, the present invention has been developed to provide an apparatus and method for releasably providing liner support that overcome many or all of the above-discussed shortcomings in the art.

The apparatus, in one embodiment, is configured to releasably support a liner and includes a body and a base. The body is configured to receive the liner, which includes an outer surface, an inner surface, and a bottom and may be longer in length than the body. The body includes a top opening and a bottom opening, with the area of the top opening being less than the area of the bottom opening, which advantageously enhances the stability of the apparatus.

The base comprises an inner surface configured to provide support to a bottom of the liner. The base is releasably attachable to the body at the bottom opening of the body using a compliant latch, the compliant latch disposed on one of the base and the body and configured to interlock with a retention flange, the retention flange disposed on another of the base and the body. Further, because the top opening is smaller than the bottom opening, advantageously, material spilled on the outside surface of the apparatus will be more likely to rest in the base, instead of on the floor around the apparatus. For example, a liquid would flow down the exterior surface of the apparatus to the base instead of dripping on the floor.

Additionally, in certain embodiments, the body gradually slopes inward from the bottom opening to the top opening. Advantageously, the slope of the body may provide for easy removal of the liner, wherein separation of the apparatus from the liner does not involve significant vacuum forces as in conventional trash cans and liners.

In one embodiment, the liner removably fits inside the body to protect the body from direct contact with soiled objects. This advantageously allows one to fit considerably more material inside the apparatus by compressing the material with forces which may otherwise damage the liner. This adds a further advantage wherein fewer liners are needed for the same amount of material. The liner is longer in length than the body to allow the liner to wrap around the top opening of the body. The base releasably attaches to the body at the bottom opening, which advantageously makes the apparatus easier to clean, avoiding odors, germs, and pests, an advantage especially important for uses such as in hospitals. The inner surface of the base supports the bottom of the liner.

In one embodiment, the apparatus is configured to store trash. The body may be any shape or size, and may include a lid. Clips may be used to attach the liner to the body.

The apparatus, in another embodiment, is advantageously configured to protect the liner from puncture. Specifically, the body protects the liner from puncture when the bottom opening is inserted into the liner first. The base attaches to the body, thus trapping the liner between the base and a lower lip of the body. Securing devices hold the liner in a generally fixed zone about the body to prevent the liner from snagging twigs, limbs, etc. Additionally, the handles remain uncovered to allow easy movement of the apparatus.

The handles may be notched to retain the liner. The notch may take any suitable shape, and in one embodiment, the notch is v-shaped.

Additionally, the apparatus may be reversible. That is, the body may be provided with a latchable base and a latchable lid so that the base may be positioned either with the small opening facing up or with the large opening facing up,

A method of the present invention is also presented for providing support to the liner. In one embodiment, the method includes providing a body with a top opening having less area than a bottom opening, the body gradually sloping from the bottom opening to the top opening, inserting the bottom opening into an opening of the garbage bag, gathering the opening of the garbage bag and sides of the garbage bag about the bottom opening of the body, attaching a base to the bottom opening with a securing device, securing the garbage bag and sides of the garbage bag to a lower portion of the body, filling the body with objects, when filled, removing the base and letting contents drop into the liner, and removing the body from the liner.

The method may also include the step of securing the garbage bag sides to the lower portion of the body with the same securing device that is used to attach the base to the body.

Reference throughout this specification to features, advantages, or similar language does not imply that all of the features and advantages that may be realized with the present invention should be or are in any single embodiment of the invention. Rather, language referring to the features and advantages is understood to mean that a specific feature, advantage, or characteristic described in connection with an embodiment is included in at least one embodiment of the present invention. Thus, discussion of the features and advantages, and similar language, throughout this specification may, but do not necessarily, refer to the same embodiment.

Furthermore, the described features, advantages, and characteristics of the invention may be combined in any suitable manner in one or more embodiments. One skilled in the relevant art will recognize that the invention can be practiced without one or more of the specific features or advantages of a particular embodiment. In other instances, additional features and advantages may be recognized in certain embodiments that may not be present in all embodiments of the invention.

These features and advantages of the present invention will become more fully apparent from the following description and appended claims, or may be learned by the practice of the invention as set forth hereinafter.

BRIEF DESCRIPTION OF THE DRAWINGS

In order that the advantages of the invention will be readily understood, a more particular description of the invention briefly described above will be rendered by reference to specific embodiments that are illustrated in the appended drawings. Understanding that these drawings depict only typical embodiments of the invention and are not therefore to be considered to be limiting of its scope, the invention will be described and explained with additional specificity and detail through the use of the accompanying drawings, in which:

FIGS. **1**A-**1**C illustrate an exploded, front, and perspective view respectively of an apparatus for supporting a liner according to one embodiment of the present invention;

FIGS. **2**A-**2**E illustrate side views of bases according to various embodiments of the present invention;

FIGS. **3**A-**3**C illustrate an exploded, front, and perspective view of respectively an apparatus for supporting a liner with a wheel assembly according to one embodiment of the present invention;

FIGS. **4**A-**4**C illustrate an exploded, front, and perspective view respectively of an apparatus for supporting a liner with a wheel assembly according to another embodiment of the present invention;

FIGS. **5**A-**5**C illustrate an exploded, front, and perspective view respectively of an apparatus for supporting a liner having an octagonal shape according to one embodiment of the present invention;

FIGS. **6**A-**6**C illustrate an exploded, front, and perspective view respectively of a rectangular shaped apparatus for supporting a liner according to one embodiment of the present invention;

FIGS. **7**A-**7**C illustrate an exploded, front, and perspective view respectively of an apparatus for supporting a liner that opens from a side to expose the liner according to one embodiment of the present invention;

FIGS. **8**A-**8**C illustrate an exploded, front, and perspective view respectively of an apparatus for supporting a liner that splits in half to expose the liner according to one embodiment of the present invention;

FIGS. **9**A-**9**C illustrate a method of removing a body of the apparatus from a filled liner according to one embodiment of the present invention;

FIGS. **10**A-**10**B illustrate a method of using a body of the apparatus to protect the liner according to one embodiment of the present invention;

FIG. **11** is a perspective view of an apparatus for supporting a liner with a lid integral to the body according to one embodiment of the present invention;

FIGS. **12**A-**12**B are perspective views illustrating a lid having an aperture and a revolving cover according to one embodiment of the present invention;

FIG. **12**C is a perspective view illustrating an apparatus for supporting a liner covered with the lid of FIGS. **12**A-**12**B according to one embodiment of the present invention;

FIG. **13**A is a side view illustrating an apparatus for supporting a liner with handles configured to grip the liner according to one embodiment of the present invention;

FIG. **13**B is a plan view illustrating an apparatus for supporting a liner with handles configured to grip the liner according to one embodiment of the present invention;

FIGS. **13**C-**13**G are plan views illustrating handles configured to grip the liner according to various embodiments of the present invention;

FIG. **14** is a side view illustrating an attachable handle configured to grip the liner according to one embodiment of the present invention;

FIG. **15** is a side view illustrating an apparatus for supporting a liner having a body with a stepped exterior according to one embodiment of the present invention;

FIG. **16** is an exploded side view illustrating an apparatus for supporting a liner having a body with a rounded exterior according to one embodiment of the present invention;

FIGS. **17**A-**17**C illustrate a cross section view of one embodiment of an apparatus for supporting a liner having a compliant latch for a base;

FIGS. **18**A-**18**D illustrate cross section views of embodiments of an apparatus for supporting a liner having a waterproof seal; and

FIGS. **19**A-**19**D illustrate cross section views of embodiments of an apparatus for supporting a liner having a compliant latch for a lid.

DETAILED DESCRIPTION OF THE INVENTION

Reference throughout this specification to "one embodiment," "an embodiment," or similar language means that a particular feature, structure, or characteristic described in connection with the embodiment is included in at least one embodiment of the present invention. Thus, appearances of the phrases "in one embodiment," "in an embodiment," and similar language throughout this specification may, but do not necessarily, all refer to the same embodiment.

Furthermore, the described features, structures, or characteristics of the invention may be combined in any suitable manner in one or more embodiments. In the following description, numerous specific details are provided to give a thorough understanding of embodiments of the invention. One skilled in the relevant art will recognize, however, that the invention can be practiced without one or more of the specific details, or with other methods, components, materials, and so forth. In other instances, well-known structures, materials, or operations are not shown or described in detail to avoid obscuring aspects of the invention.

FIGS. **1**A-**1**C depict an apparatus **10** for supporting a liner **22**, such as a trash bag, a laundry bag, or the like. The apparatus **10** may be used to store any kind of object or material such as trash, laundry, leaves, rocks, dirt, branches, etc. Accordingly, the apparatus **10** may be a trash can, a laundry basket, a storage bin, or other type of container in certain embodiments. For explanation purposes, and not to be taken as limiting in its application, the apparatus **10** will be described as a trash can **10** for storing trash, generally, trash commonly removed from a home or yard.

In one embodiment, the trash can **10** comprises a body **12**, a base **14**, and a cover, or lid **16**. The body **12** includes a top opening **18** and a bottom opening **20**. In one embodiment, the area of the top opening **18** is less than the area of the bottom opening **20**. In the depicted embodiment, the body **12** gradually slopes inward from the bottom opening **20** to the top opening **18** to create a funnel, or conical-shaped body **12**. Of course, the body **12** may have other shapes as well.

In certain embodiments, a bottom lip **21** may run perpendicular to the base **14** to allow the base **14** to easily fit over the bottom lip **21**. Similarly, a top lip **23** may run perpendicular to the lid **16** to allow the lid **16** to easily fit over the top lip **23**.

The body **12** may slope or otherwise progress inward from the bottom opening **20** to the top opening **18**. In one embodiment, the body **12** slopes inward from the bottom opening at more than 90 degrees with respect to a horizontal axis of the base **14**, as illustrated in FIG. **1**B by angle α. In a further contemplated embodiment, the body **12** slopes inward at an angle α that is approximately 110 degrees.

The body **12** may be configured to receive a liner **22**. The liner **22** includes an outer surface **24**, an inner surface **26**, and a bottom **28**. The liner **22**, in certain embodiments, removably fits inside the body **12** to protect the body **12** from direct contact with soiled objects. To enable the liner **22** to fold over the body **12**, the body **12** may be shorter in length than the length of the liner **22**. In one embodiment, a liner securing device, such as a series of clips (not shown), attached to an outer surface of the body **12**, releasably secure upper edges of the liner **22** to the body **12**. In operation, a user pulls the liner **22** between the clips and the body **12** to hold the liner **22** thereto. One skilled in the art will recognize that there are numerous methods and devices for securing the liner **22** to the body **12**.

The base **14** releasably attaches to the body **12** at the bottom opening **20**. In done embodiment, securing devices **32** secure the base **14** to the body **12**. In the illustrated embodiment, the securing devices **32** extend perpendicular to the base **14** a predetermined distance and are designed to flex over the bottom lip **21** of the body **12** and enter slots **36** to hold the base **14** to the body **12**. It is recognized, however, that the securing devices **32** may be incorporated directly into side walls **38** of the base **14**, rather than extending perpendicular therefrom. When the base **14** is attached to the body **12**, an inner surface **30** of the base **12** supports the bottom **28** of the liner **22** to prevent the liner **22** from ripping when loaded.

In one embodiment, the base **14** comprises at least one foot rest (not shown) protruding outward from the base **14** to allow the user to stand on the foot rest while the user lifts the body **12** therefrom. Advantageously, the user is not required to bend down and release the base **14** from the body **12**.

The lid **16** is designed to removably attach to the body **12** to maintain the objects within the trash can **10** and prevent odors from escaping therefrom. The lid **16** may include a handle **33** to facilitate removal of the lid **16**, and the lid **16** may be secured to the body **12** with one or more securing devices **32**.

Because the lid **16** and the base **14** may be secured to the body **12**, the trash can **10** is, in one embodiment, reversible. That is, the trash can **10** may be used alternatively with either the top opening **18** or the bottom opening **20** facing up to receive objects for storage within the trash can **10**. In this embodiment, handles may be formed in the lid **16** or the base **14** in a recessed manner such that the trash can **10** may stand flat on either the lid **16** or the base **14**.

FIGS. **2**A-**2**E illustrate the base **14** having various embodiments of securing devices **32**. The securing devices **32** may also be used to fasten the lid **16** to the body **12**. Each base **14** may include a handle **40**. Referring to FIGS. **2**A-**2**B, as described above with respect to FIG. **1**, the securing devices **32** extend perpendicular to the base **14** a predetermined distance. The securing devices **32**, of this embodiment, are designed to flex over the bottom lip **21** (See FIG. **1**) of the body **12**, slide over the bottom lip **21**, and enter slots **36** (See FIG. **1**) to hold the base **14** to the body **12**.

The securing devices **32** of FIG. **2**A include foot latches **42**, which allow the user to step on top of the foot latch **42** to release the securing device from the slots **36**. Additionally, the securing devices **32** may be hingedly, pivotably, or rotatably attached to the base **14** to allow the user to disengage the securing devices **32** from the body **12** and move the securing devices **32** away from the body **12** to facilitate the removal of the base **14** from the body **12**.

Referring to FIG. **2**C, the securing device **32** may be a buckle type device configured to latch onto the body **12**. Specifically, hoops **44** rotatably connect to the base **14** and attach to posts (not shown) on the body **12**. The hoops **44** may be tightened using well known buckle techniques.

Referring to FIG. **2**D, the base **14** is shown configured to form a tight friction fit with the body **12**. The body **12** fits into the base **14** and friction prevents the body **12** and the base **14** from separating until the user applies a force strong enough to detach the base **14** from the body **12**.

Referring to FIG. **2**E, the base **14** is shown including threads **46** to screw onto the body **12**. The threads **46** may be internal or external, depending on the corresponding threads on the body **12**.

FIGS. **3**A-**4**C illustrate trash cans **10** having an optional wheel assembly to facilitate movement thereof according to various embodiments of the present invention. Specifically referring to FIGS. **3**A-**3**C, a wheel base **48** removably attaches to a bottom **50** of the base **14**. The wheel base **48** may be permanently attached, or may be attached using any suitable mechanism, including the mechanisms described above in certain embodiments. The wheel base **48**, in the illustrated

embodiment, includes a post and a pair of wheels **52** connected together via a single axel **56**. The axel **56** connects to the wheel base **48** through a pair of axel blocks **58**.

The wheel base **48** of FIGS. **4**A-**4**C comprises a plurality of swivel wheels **60** or casters. The swivel wheels **60** connect to the wheel base **48** with well known attachment devices. One skilled in the art will recognize that there are various wheel configurations available.

FIGS. **5**A-**6**C illustrate alternative embodiments of the trash can **10**. Specifically, FIGS. **5**A-**5**C show the trash can **10** having an octagonal-shaped body **12**, base **16**, and corresponding lid **16**.

FIGS. **6**A-**6**C show the trash can **10** having a rectangular shape. One skilled in the art will recognize that the illustrated embodiments are not intended to be limiting. Rather one skilled in the art will recognize that there are innumerable shapes and sizes of trash cans **10** that can be used. FIGS. **15** and **16** illustrate further suitable shapes.

FIGS. **7**A-**8**C illustrate an apparatus **10** for supporting a liner that facilitates removal of the liner **22** with a releasable seam **35** in the side of the body **12**. Specifically, FIGS. **7**A-**7**C show the body **12** configured to open on a side **62** to expose the inner side of the body **12**. A securing device **64** may be used to hold the body **12** closed. The body **12**, may comprise a flexible material to allow the user to spread the sides **62** of the body **12** open. Alternatively, the body **12** may comprise multiple side members connected by a connecting device such as a hinge, rail assembly, or the like.

Referring to FIGS. **8**A-**8**C, the body **12** may be configured with two seams **35** such that the body **12** may be split into two corresponding side members **66** to reveal the contents of the body **12**. In certain embodiments, the side members **66** hingedly connect to the base **14**.

FIGS. **9**A-**9**C illustrate a process for removing the liner **22** from the body **12** according to one embodiment of the present invention. Referring specifically to FIG. **9**A, the liner **22** is positioned inside the trash can **10** with the liner **22** extending from the top opening **18**, wrapped around the top lip **23**, and secured to the body with clips **25**.

Referring now to FIGS. **9**B and **9**C, the user removes the lid **16** and pulls the body **12** from the base **14**. Due to the inverted shape of the body **12**, a slight vertical movement of the body **12** from the base **14** substantially frees the liner **22** from contacting the entire inner surface of the body **12**. Advantageously, the liner **22** becomes substantially disengaged from the body **12** with very little effort by the user, which decreases frictional forces and negative pressure forces common with standard trash cans. Specifically, with standard trash cans the user is required to pull the entire trash bag from the trash can. Accordingly, the trash bag rubs against the trash can the entire length of the trash can. Additionally, the negative pressure in a void behind the trash bag makes removal difficult.

FIGS. **10**A-**10**B illustrate a method of using the apparatus **10** to support and protect the liner **22** when filling the liner **22** with objects that may cause damage to the liner **22** according to one embodiment of the present invention. The body **12** is placed inside the liner **22** and the liner **22** is slightly pulled over the bottom opening **20** of the body **12**. The user attaches the base **14** to the body **12**. Preferably, the securing means **32** hold the liner **22** below the handles to allow the user to carry the apparatus **10** without risk of grabbing the liner **22** and possibly causing tears or punctures.

The user fills the body **12** with the intended objects, and when full, releases the securing devices **32** to disengage the base **14** therefrom. With the base **14** removed, the objects inside the body **12** drop and pull the liner **22** from the body **12**, thus transferring the objects from the body **12** to the liner **22**. Preferably, clips **25** hold upper portions of the liner **22** until the user disengages the upper portions therefrom. The body **12** protects the liner **22** until the body **12** is removed.

FIG. **11** illustrates one embodiment of an apparatus **10** with an integrated lid **16**. The body **12** may be inserted into the liner **22** as described above with respect to FIGS. **10**A-**10**B. The integrated lid **16** may provide a covering for the contents of the body **12** and may facilitate removing the body **12** from the liner **22**. The base **14** may provide support to the liner **22**. In certain embodiments, an opening **70** is formed for receiving objects into the top opening **18** of the body **12**. The opening **70** may be covered with a hinged door or the like as is known in the art.

FIGS. **12**A-**12**B illustrate one embodiment of a suitable lid **16**. In the depicted embodiment, the lid **16** comprises an exterior ring **72** and an interior disc **74**. The disc **74** is provided with a receiving bracket **76** through which is passed a rod **78**. The rod **78** is contained within snap fitted slots **75** within the exterior ring **72** at either end thereof. The receiving bracket **76** and the snap fitted slots **75** allow the rod **78** to swivel so that the disk **74** may be rotated around the rod **78**, thereby exposing the top opening **18**.

FIGS. **13**A-**13**G illustrate certain embodiments of handles **80** that form the dual function of allowing for gripping and transit of the trash can **10** and securing of the liner **22**. As shown in FIG. **13**B, one or more handles **80** may be connected to the body **10** and in certain embodiments the handles **80** are provided with one or more slots **82**. The slots **82** are configured to secure the liner **22** therein. That is, the liner **22** is stretched, and portions of the liner are pulled tight into the slots **82**, where the portions are retained once the pressure on the portions is released. Of course, the handles may be used without the slots, and the slots may be formed on brackets that do not function as handles.

FIGS. **13**C-**13**G show alternate embodiments of the slots **82**. FIG. **13**C shows the slot in the form of a V, having two sides joining together at the center thereof. FIG. **13**D shows the slot **82** in the form of a V having an opening at a juncture of the two sides of the V. FIG. **13**E shows the slot having a rectangular shape with two adjoining sides and a central connecting portion. FIG. **13**F shows the slot **82**D formed substantially similar to the slot **82**C of FIG. **13**E, and also having formed on the sides of the slot teeth **84**. FIG. **13**G shows a V-shaped slot **82**E having formed thereon sharpened protruding lips **85**.

FIG. **14** shows a handle **200** which may be attached to a new trash can **10** or retrofitted to an existing trash can **10**. The handle **200** is formed with a frame portion **86** that may be any suitable shape including flat. In the depicted embodiment, the frame portion **86** is hook shaped in order to be insertable onto a body **12** through the top opening **18** with one end extending inside the opening **18** and one side outside the opening **18**. An aperture **90** may be provided to receive a bolt **92**. The passageway **90** may be threaded, though a nut (not depicted) may also be used to secure the bolt **92** in place. A grip **88** may be connected with the frame portion **86** to allow a user to grasp the handle **200**.

In one embodiment, the handle **200** may be provided with a slot **82** in order to secure a liner **22** therein. The slot **82** may be configured in the same manner as one of the embodiments of FIGS. **13**A **13**G.

FIGS. **15** and **16** show additional shapes in which the body **12** may be formed. In FIG. **15**, the body **12** is formed with steps **95**. The steps may also be rounded or ribbed or the like. In FIG. **16**, the body **12** is bowed outward. In FIG. **15** and FIG. **16**, the body **12** becomes progressively thinner as it progresses upward.

FIGS. **17**A-**17**C illustrate one embodiment of an apparatus to support a liner according to the present invention. The apparatus includes a body **1702**, a base **1704**, a retention flange **1706**, and a compliant latch **1710**. The apparatus to support a liner supports a liner with a removable base **1704** that latches to a body **1702** using a compliant latch **1710**.

In one embodiment, the body **1702** receives and protects a liner. The body **1702** may include a mating surface **1708** at the bottom opening of the body **1702**. In one embodiment, the mating surface **1708** is configured to mate with the base **1704**.

The body **1702** further comprises a retention flange **1706** in certain embodiments. The retention flange **1706** may be disposed on the body **1702** near the bottom opening of the body **1702** and be configured to mate with an element of the base **1704** to removably attach the body **1702** to the base **1704**. In certain embodiments, the retention flange **1706** may be a separate element attached to the body **1702**. In another embodiment, the retention flange **1706** may be formed with the body **1702**. For example, the body **1702** and the retention flange **1706** may be injection molded simultaneously.

The base **1704**, in certain embodiments, forms a bottom surface of the apparatus. In one embodiment, the base **1704** supports the liner. In a further embodiment, the base further comprises a compliant latch **1710**. The compliant latch **1710** interacts with the retention flange **1706** to secure the base **1704** to the body **1702** as illustrated in FIG. **17**B.

The compliant latch **1710**, in certain embodiments, is a separate element attached to the base **1704**. In another embodiment, the compliant latch **1710** is formed with the base **1704**. For example, the compliant latch **1710** and the base **1704** may cast in a single mold at the same time.

In certain embodiments, the compliant latch **1710** is configured to flex or deform under a force **1712** to release or engage the compliant latch **1710** from or with the retention flange **1706** as illustrated in FIG. **17**C. For example, the base **1704** may be configured to flex when a force **1712** is applied at the compliant latch **1710**. As the base **1704** flexes, the compliant latch **1710** disengages from the retention flange **1706** in this example.

As will be appreciated by one skilled in the art, other configurations of compliant latch **1710** may be employed and should be considered within the scope of the present invention. For example, in one embodiment, the compliant latch may be connected to the body **1702** and the retention flange may be connected to the base **1704**. In this example, the body **1702** may be configured to flex under a force to free the compliant latch from the retention flange.

In certain embodiments, the compliant latch **1710** acts as a footrest protruding outward from the base **1704**. A user may place a foot on the foot rest as the base **1704** is removed from the body **1702**. Beneficially, the foot rest allows the user to remove the base from the body without bending to reach the base **1704** by hand.

FIGS. **18**A-**18**D illustrate embodiments of an apparatus to support a liner having a water proof seal according to the present invention. The apparatus may include a body **1702** having a retention flange **1706** and a mating surface **1708**, a base **1804**, a compliant latch **1804**. In certain embodiments, the apparatus includes an O ring **1806**. In another embodiment, the apparatus includes a gasket **1808**. The apparatus to support a liner having a water proof seal supports and protects a liner while retaining liquid within the apparatus.

The body **1702**, the retaining flange **1706** and the mating surface **1708** are preferably configured in a similar manner to like numbered elements described in relation to FIGS. **17**A-**17**C. The compliant latch **1804** is preferably configured in a like manner to the compliant latch **1710** described in relation to FIGS. **17**A-**17**C.

The base **1802**, in one embodiment, removably attaches to the body **1702**. In certain embodiments, the apparatus includes a substantially waterproof seal at the connection between the base **1802** and the body **1702**. Beneficially, the substantially waterproof seal prevents or restricts the escape of liquids when the apparatus receives liquids that escape from the liner, thus preventing leakage.

In certain embodiments, the waterproof seal comprises an O ring **1806**. The O ring **1806** may extend around the perimeter of the base **1802** and interact with the base **1802** and the mating surface **1708** to form a substantially waterproof seal. The O ring **1806** may be position in a receiver **1808** formed in the base to retain the O ring **1806** in a functional position. The O ring **1806** may comprise any material known in the art to form a seal, such as an elastomer, nylon, rubber, synthetic rubber, or the like.

Other embodiments of O ring may be employed as will be recognized by one skilled in the art. For example, in an alternate embodiment, the O ring **1806** may be disposed on the body **1702** and interact with the base **1802** upon attachment of the base **1802** to the body **1702**. The body **1702** may further include a receiver formed in the body **1702** to hold the O ring **1806** in a functional position. In another example, the O ring **1806** may be independent of the base **1802** and the body **1702**.

In another embodiment, the waterproof seal comprises a gasket **1810**. The gasket **1810**. The gasket **1810** may comprise any type of gasket known in the art. For example, in one embodiment, the gasket **1810** may comprise a ring shaped piece of elastomer disposed on an upper surface of the base **1802** and configured to mate with a bottom surface of the body **1702** as illustrated in FIG. **18**D.

FIGS. **19**A-**19**D illustrate embodiments of an apparatus to support a liner having a lid **1904** that fastens to the body **1902** using a compliant latch **1910**. The apparatus may include a body **1902** having an upper retention flange **1906** and an upper mating surface **1908**, a lid **1904**, a compliant latch **1910** and a waterproof seal **1912**. In certain embodiments, the apparatus further includes a base **1802** that attaches to the body **1902** using a compliant latch **1804** as described in FIGS. **17**A-**17**C and **18**A-**18**D. The apparatus with the attachable lid **1904** provides a secure means for closing the apparatus and for using the apparatus with either the top opening or the bottom opening facing up.

The body **1902** in certain embodiments, includes an upper retention flange **1906** and an upper mating surface **1908**. The upper retention flange **1906** and the upper mating surface **1908** may interface with a lid **1904** to provide a closure for the top opening of the body **1902**. The body **1902** may have other characteristics as described in relation to FIGS. **1**-**18**.

The lid **1904**, in certain embodiments, is configured in a manner similar to the base **1704**, **1802** described in previous figures. The lid **1904** may have an upper compliant latch **1910** that mates with an upper retention flange **1906** of the body **1902**. In certain embodiments, the upper compliant latch **1910** disengages from the upper retention flange **1906** under a force **1914** as shown in FIG. **19**C. The force may cause a component of the apparatus to flex or deform, allowing the upper compliant latch **1910** to disengage and the lid **1904** to be removed from the body **1902**. In one embodiment, the lid **1904** is flexible, and the lid **1904** deforms under the applied force **1914**.

In one embodiment, the lid **1904** includes a waterproof seal **1912**. The waterproof seal **1912** restricts the flow of liquid. Beneficially, the waterproof seal **1912** allows the apparatus to contain a liquid when positioned with the top end of the body **1902** facing down.

The waterproof seal **1912** may comprise any type of seal known in the art, including an O ring, a gasket, and the like. The waterproof seal **1912** may be attached to the lid **1904**, the base **1902**, both the lid **1904** and the base **1902**, or neither the lid **1904** or the base **1902**. In certain embodiments, the water-

proof seal **1912** includes a receiver **1916** to position the waterproof seal **1912** in a functional position.

The present invention may be embodied in other specific forms without departing from its spirit or essential characteristics. The described embodiments are to be considered in all respects only as illustrative and not restrictive. The scope of the invention is, therefore, indicated by the appended claims rather than by the foregoing description. All changes which come within the meaning and range of equivalency of the claims are to be embraced within their scope.

What is claimed is:

1. An apparatus to releasably support a liner, the apparatus comprising:

a body having a top opening and a bottom opening, the area of the top opening being less than the area of the bottom opening, the body configured to receive a liner, wherein the liner is longer in length than the body;

a base, comprising an inner surface of the base configured to provide support to a bottom of the liner;

wherein the base is releasably attachable to the body at the bottom opening of the body using a compliant latch, the compliant latch disposed on one of the base and the body and configured to interlock with a retention flange, the retention flange disposed on another of the base and the body;

wherein the compliant latch forms a foot rest protruding outward from the base and formed of a flexible material configured to deform the base under a force such that the compliant latch disengages from the retention flange; and

a lid releasably attachable to the body at the top opening, such that the body may be accessed at the top or the bottom.

2. The apparatus of claim **1**, further comprising a handle attached to the body.

3. The apparatus of claim **1**, further comprising clips attached to an outer surface of the body, configured to secure upper edges of the liner to the body.

4. The apparatus of claim **1**, wherein the body angles inward on the outside surface, from the bottom opening to the top opening, at more than 90 degrees, with respect to the base.

5. The apparatus of claim **1**, wherein the body attaches to the base with a substantially water proof seal.

6. The apparatus of claim **5**, wherein the substantially water proof seal comprises a gasket disposed between the base and the body.

7. The apparatus of claim **5**, wherein the substantially water proof seal comprises an O ring disposed between the base and the body.

8. The apparatus of claim **1**, wherein the body attaches to the lid with a substantially water proof seal.

9. The apparatus of claim **8**, wherein the substantially water proof seal comprises a gasket disposed between the lid and the body.

10. The apparatus of claim **5**, wherein the substantially water proof seal comprises an O ring disposed between the lid and the body.

11. The apparatus of claim **1**, wherein the body comprises a releasable substantially vertical seam for providing access to an interior of body.

12. The apparatus of claim **1**, further comprising clips disposed on the exterior of the body for receiving the liner when the liner extends out of the bottom opening.

13. The apparatus of claim **1** wherein the lid is releasably attachable to the body at the top opening of the body using a compliant latch, the compliant latch disposed on one of the lid and the body and configured to interlock with a retention flange, the retention flange disposed on another of the lid and the body.

14. An apparatus to protect and support a liner, comprising:

a body having a top opening and a bottom opening, the area of the top opening being less than the area of the bottom opening, the body configured to be inserted into a liner;

a base comprising an inner surface of the base configured to provide support to a bottom of the liner;

wherein the base is releaseably attached to the body at the bottom opening of the body using a compliant latch, the compliant latch disposed on the base and configured to interlock with a retention flange, the retention flange disposed on the body;

wherein the compliant latch forms a foot rest protruding outward from the base and formed of a flexible material configured to deform the base under a force such that the compliant latch disengages from the retention flange;

an O ring disposed between the base and the body, the O ring configured to seal the apparatus to prevent the passage of liquid from the body; and

a lid at the top of the body to cover the top opening, such that body may be accessed at the top or the bottom.

15. The apparatus of claim **14**, wherein the apparatus further comprises handles attached to the body, and wherein the handles remain accessible even with the liner attached to the body.

16. The apparatus of claim **15**, further comprising a notch formed in each of the handles to secure the liner.

17. The apparatus of claim **14**, wherein the base and the lid are both securely fastenable such that the apparatus may be used with either the top opening or the bottom opening facing up to receive objects.

18. The apparatus of claim **14**, further comprising wheels attached to the base.

19. A method for using an apparatus to support and protect a liner, the method comprising:

providing a body with a top opening and a bottom opening;

inserting the body into an opening of the liner;

gathering the opening of the liner and sides of the liner about the body;

attaching a base to the bottom opening with a compliant latch, the compliant latch forming a foot rest disposed on the base and configured to interlock with a retention flange, the retention flange disposed on the body;

securing the liner and sides of the liner to a lower portion of the body;

filling the body with objects;

removing the base by applying a force to the foot rest and allowing the objects to move from the body to the liner; and

removing the body from inside of the liner.

20. The method of claim **19**, further comprising providing a handle formed on the body, the handle having a notch formed therein and securing the liner within the notch.

21. The method of claim **19**, wherein inserting the body into an opening of the liner comprises one of inserting the body into the opening of the liner with the top opening facing up to receive objects and inserting the body into the opening of the liner with the bottom opening up to receive objects.

* * * * *