US009033176B2

(12) **United States Patent**
Liistro et al.

(10) **Patent No.: US 9,033,176 B2**
(45) **Date of Patent: May 19, 2015**

(54) **WASTE DISPOSAL APPARATUS**

(71) Applicant: **Moderntake Product Solutions, LLC**, Doylestown, PA (US)

(72) Inventors: **Brenda O'Grady Liistro**, Westport, CT (US); **Marta Lorenzoni-Loeb**, Hingham, MA (US); **Joseph M Clark**, London, OH (US); **Paul David Maguire**, Goochland, VA (US); **David Stowers**, Morristown, NJ (US); **Jeffrey Joss**, Union City, NJ (US); **Henry Mack**, Phillipsburg, NJ (US); **Michael Zambelli**, Basking Ridge, NJ (US)

(73) Assignee: **MODERNTAKE PRODUCT SOLUTIONS, LLC**, Doylestown, PA (US)

(*) Notice: Subject to any disclaimer, the term of this patent is extended or adjusted under 35 U.S.C. 154(b) by 0 days.

(21) Appl. No.: **14/210,275**

(22) Filed: **Mar. 13, 2014**

(65) **Prior Publication Data**

US 2014/0263348 A1 Sep. 18, 2014

Related U.S. Application Data

(60) Provisional application No. 61/798,121, filed on Mar. 15, 2013.

(51) **Int. Cl.**

B65D 25/16	(2006.01)
B65F 1/06	(2006.01)
B65F 1/10	(2006.01)

(Continued)

(52) **U.S. Cl.**

CPC ***B65F 1/06*** (2013.01); *B65F 1/0006* (2013.01); ***B65F 1/002*** (2013.01); *B65F 1/004* (2013.01); ***B65F 1/10*** (2013.01); *B65F 1/141* (2013.01); *B65F 1/1607* (2013.01); *B65F 1/1623* (2013.01); *B65F 1/1638* (2013.01); *B65F 1/1646* (2013.01);

(Continued)

(58) **Field of Classification Search**

USPC 220/495.06, 495.07, 495.08, 495.1, 220/495.11, 629

See application file for complete search history.

(56) **References Cited**

U.S. PATENT DOCUMENTS

4,953,732	A	9/1990	Cocks	
5,022,548	A *	6/1991	Stakis	220/23.83

(Continued)

FOREIGN PATENT DOCUMENTS

DE	20212283	12/2003
WO	WO 2004/083046	9/2004

(Continued)

OTHER PUBLICATIONS

Notification of Transmittal of the International Search Report and the Written Opinion of the International Searching Authority, Or the Declaration, mailed on Aug. 1, 2014, 14 pages.

Primary Examiner — Mickey Yu
Assistant Examiner — Niki Eloshway
(74) *Attorney, Agent, or Firm* — Davis Wright Tremaine LLP

(57) **ABSTRACT**

A waste disposal apparatus, such as a waste disposal container or unit that is configured to receive used personal care products in a discreet and sanitary manner. Instances of incontinence, menstruation or uncontrollable bodily functions can be a personal situation that is otherwise unknown to others. However, current receptacles available to dispose of used personal care products fail to provide for a hygienic, easily accessible and discreet that is designed for small spaces, such as a home bathroom or public restroom stall.

17 Claims, 15 Drawing Sheets

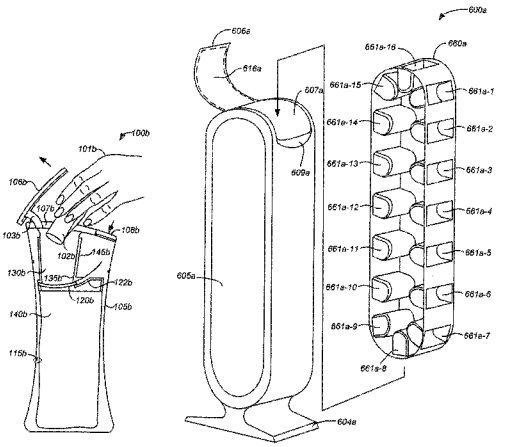

(51) **Int. Cl.**

B65D 90/00	(2006.01)
B65F 1/00	(2006.01)
B65F 1/14	(2006.01)

(52) **U.S. Cl.**

CPC *B65F 2210/18* (2013.01); *B65F 2220/106* (2013.01)

(56) **References Cited**

U.S. PATENT DOCUMENTS

5,154,345	A	*	10/1992	Shillington	232/44
5,799,909	A		9/1998	Ziegler	
6,120,743	A		9/2000	Papari	
6,739,114	B2		5/2004	Shaffer	
7,490,731	B2		2/2009	Hautop	
7,696,711	B2		4/2010	Pollack et al.	
8,087,532	B2		1/2012	Brown et al.	
8,690,429	B1		4/2014	Germanow et al.	
2007/0045324	A1		3/2007	Mitchell et al.	
2010/0187235	A1	*	7/2010	Chen	220/495.06
2010/0301050	A1	*	12/2010	Garland	220/495.08
2011/0245793	A1		10/2011	Weinmann	
2012/0294551	A1		11/2012	Ford	

FOREIGN PATENT DOCUMENTS

WO	WO 2005/120992	12/2005
WO	WO 2013/134124	9/2013

* cited by examiner

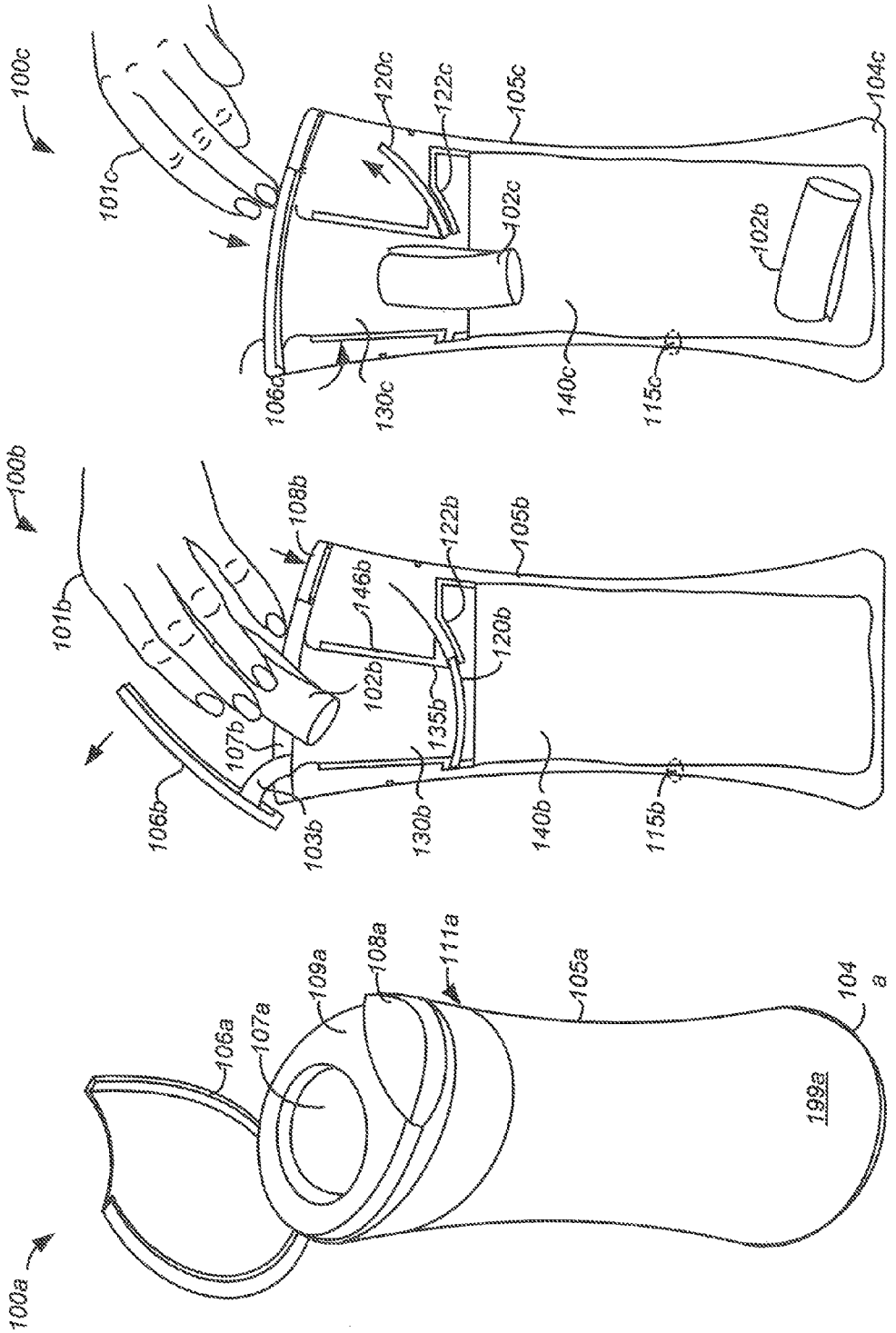

FIG. 1C

FIG. 1B

FIG. 1A

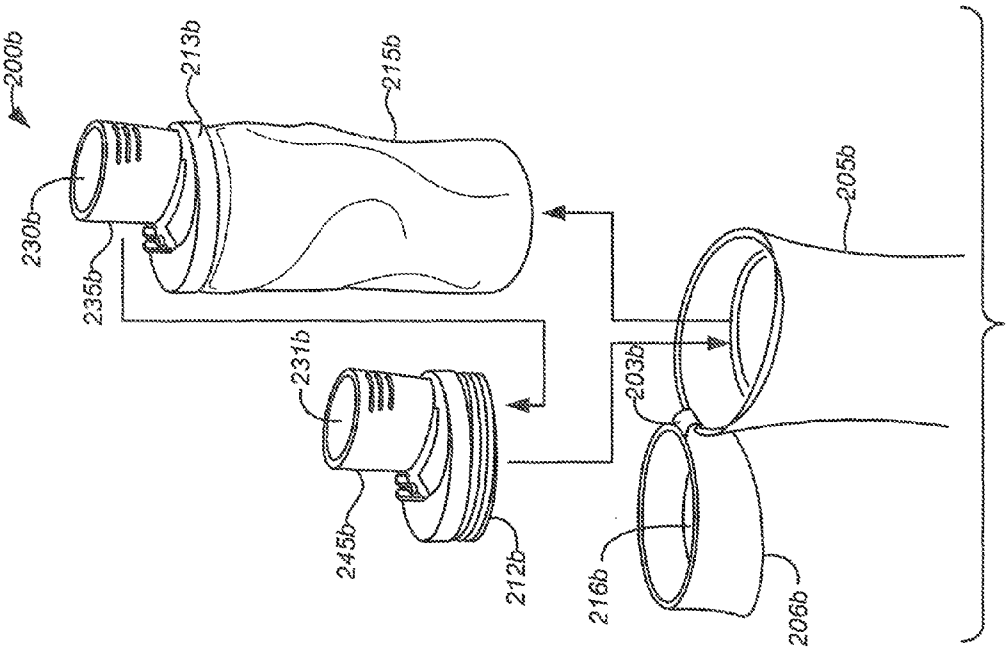
200b
213b
215b
230b
235b
231b
245b
212b
203b
205b
216b
206b

FIG. 2B

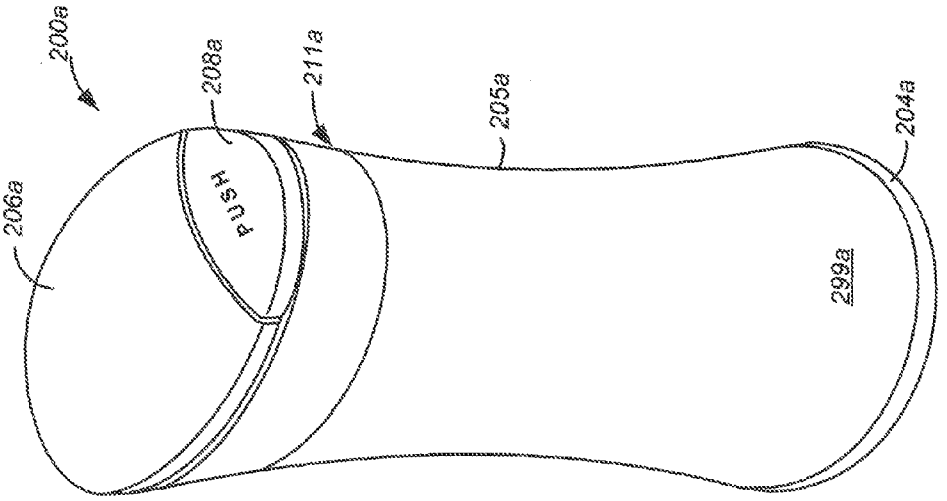
200a
208a
211a
205a
204a
206a
PUSH
299a

FIG. 2A

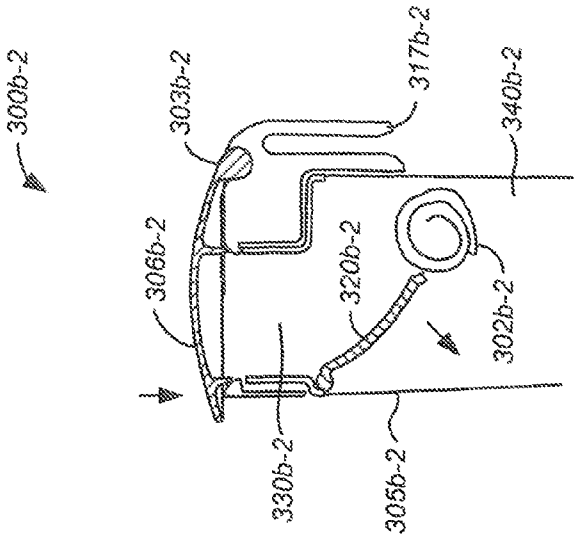

FIG. 3B-2

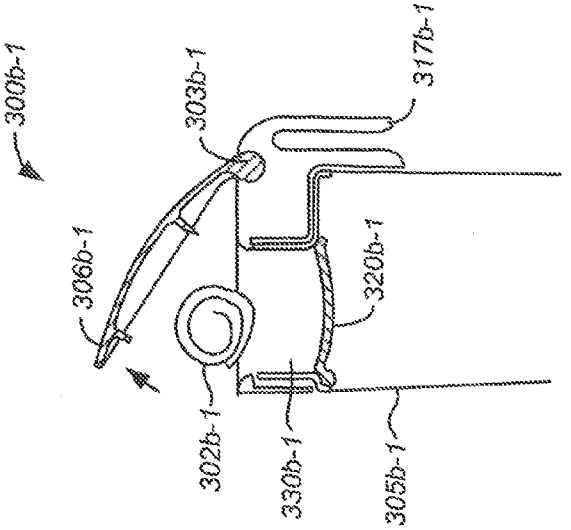

FIG. 3B-1

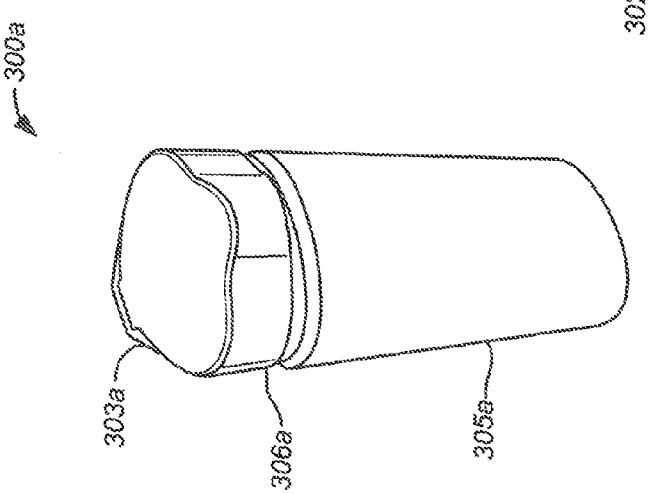

FIG. 3A

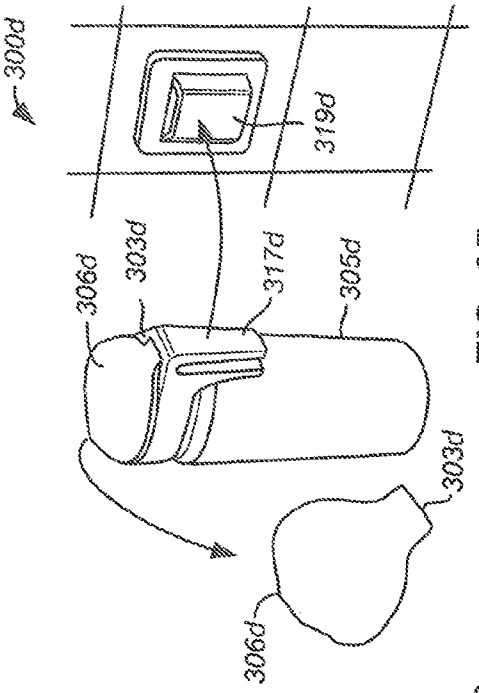

FIG. 3D

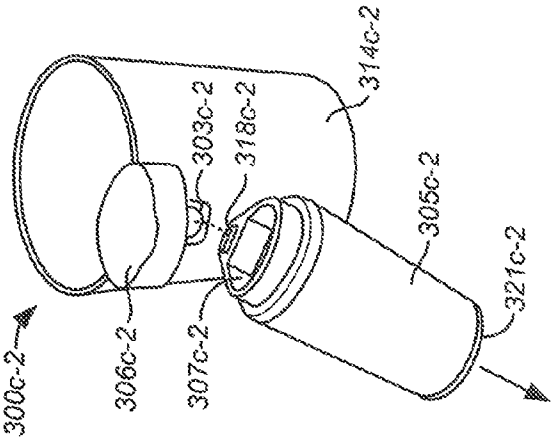

FIG. 3C-2

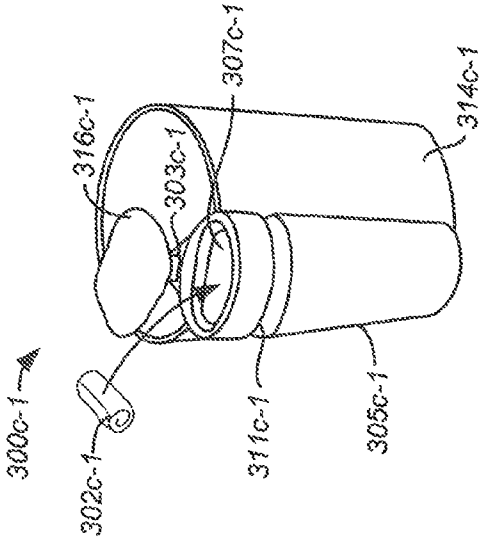

FIG. 3C-1

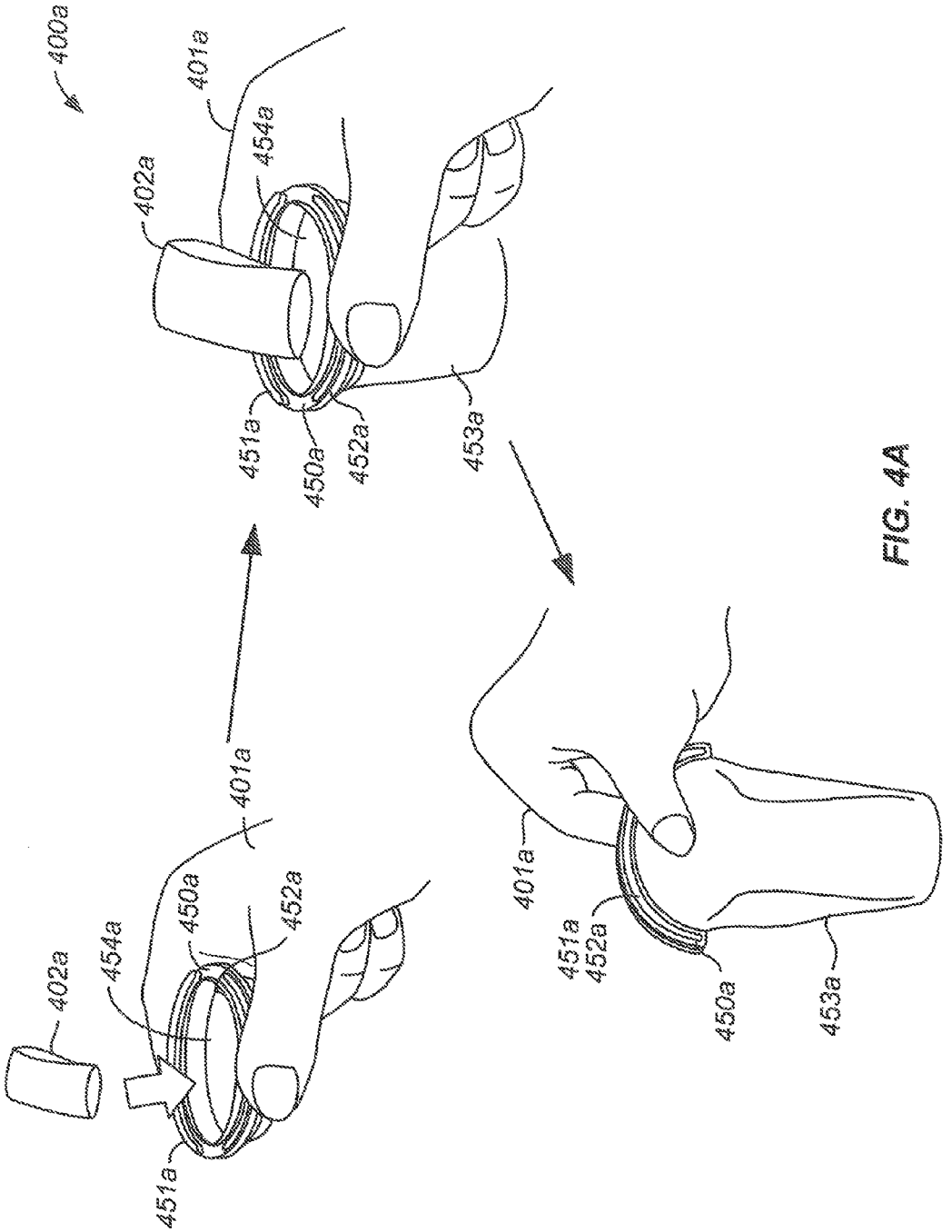
400a
402a
401a
454a
451a
450a
452a
453a
402a
454a
450a
452a
401a
451a
401a
451a
452a
450a
453a

FIG. 4A

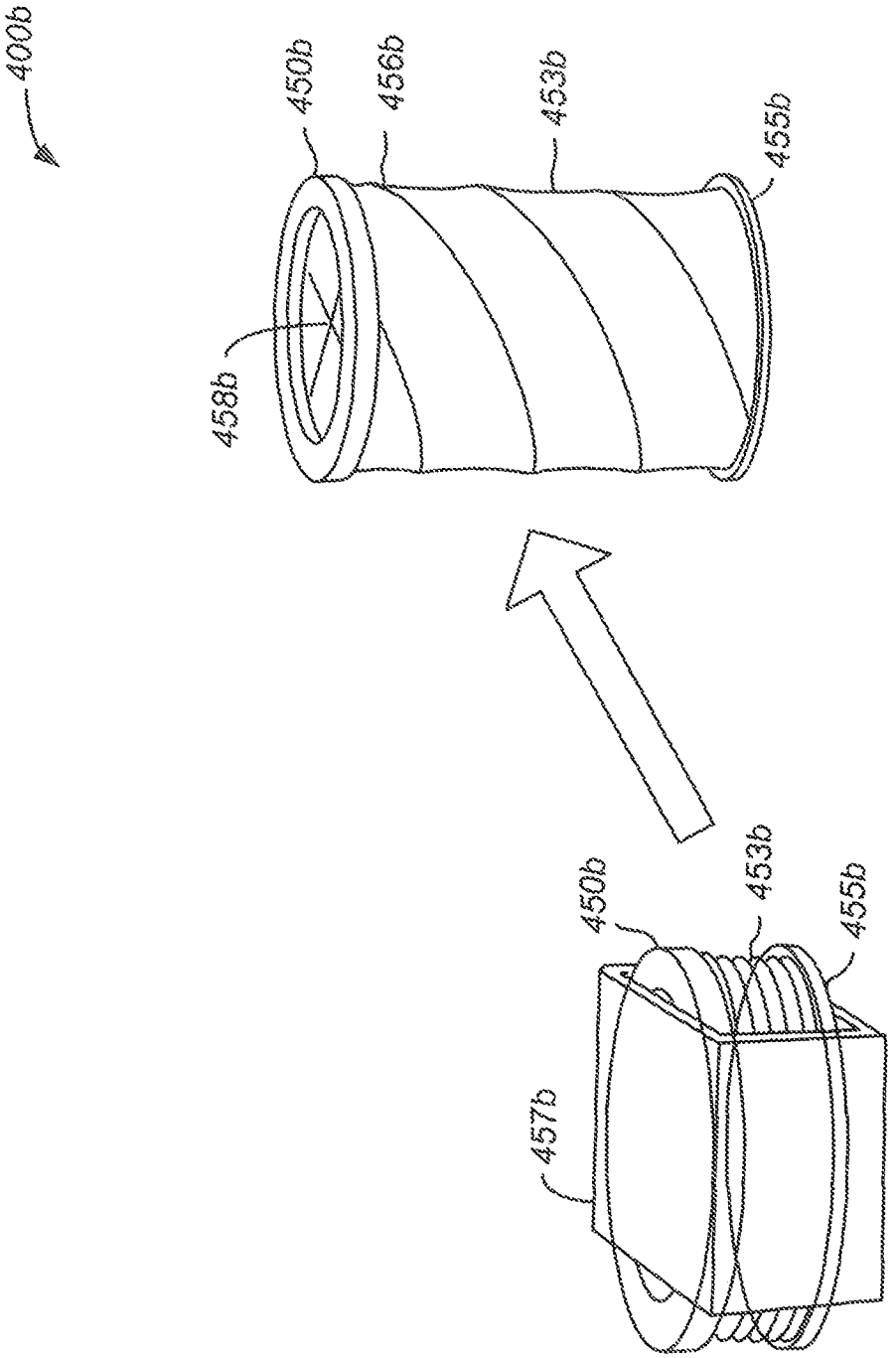

FIG. 4B

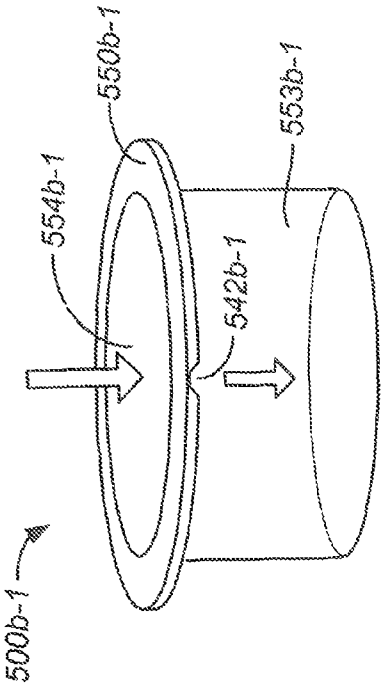

FIG. 5B-1

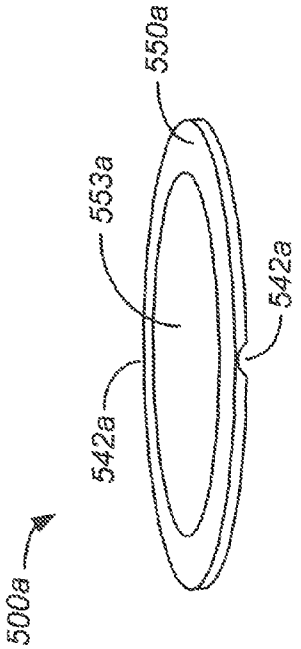

FIG. 5A

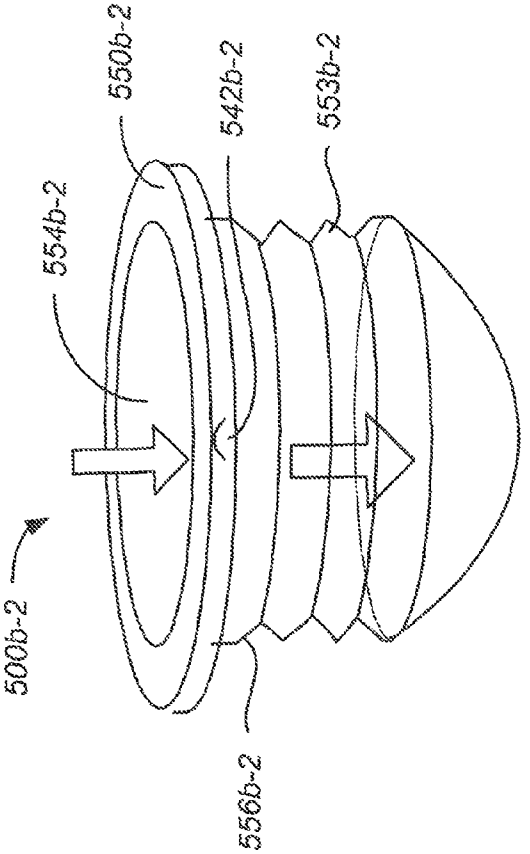

FIG. 5B-2

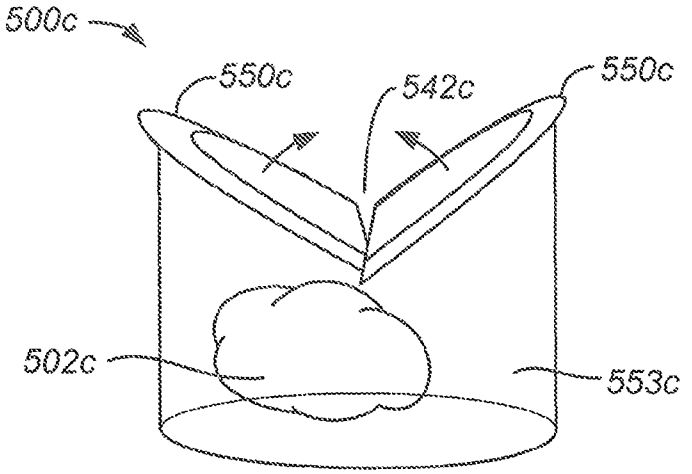

FIG.5C

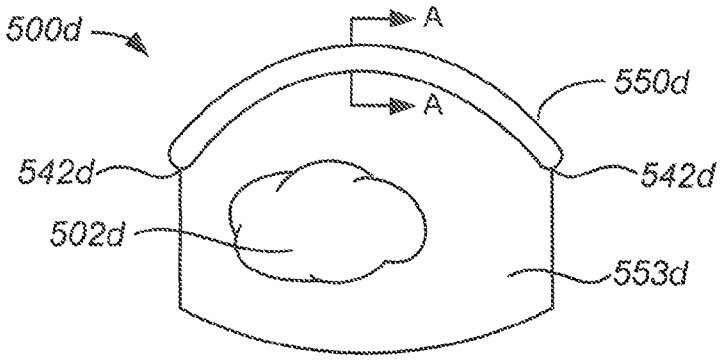

FIG. 5D

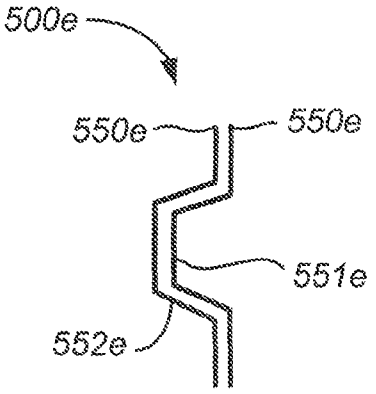

FIG. 5E

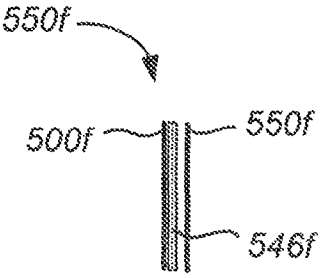

FIG. 5F

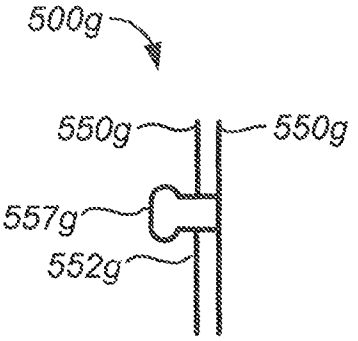

FIG. 5G

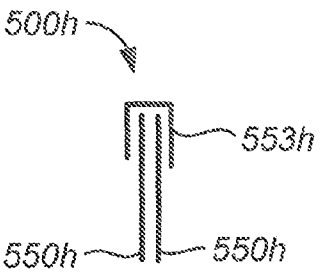

FIG. 5H

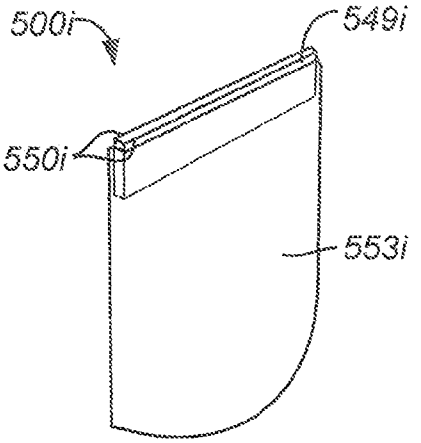

FIG. 5I

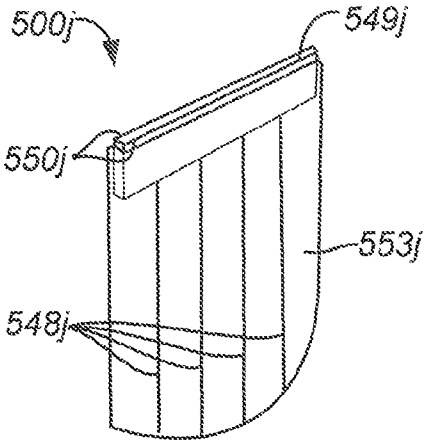

FIG. 5J

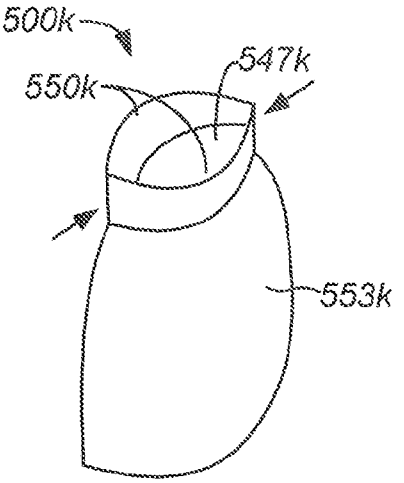

FIG. 5K

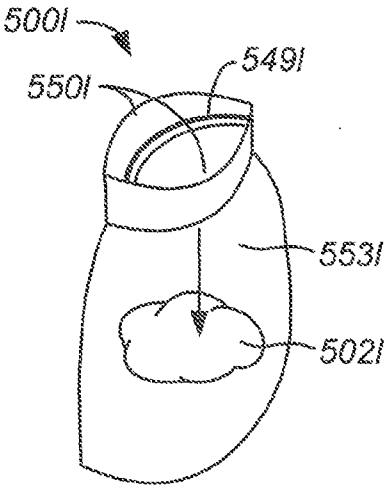

FIG. 5L

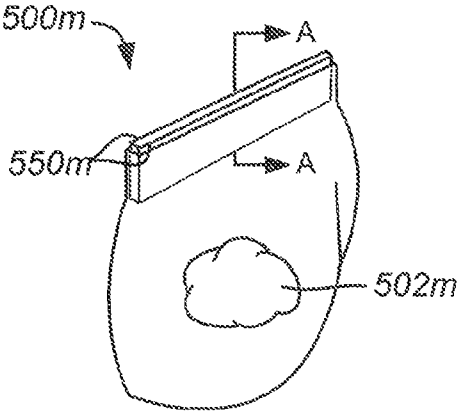

FIG. 5M

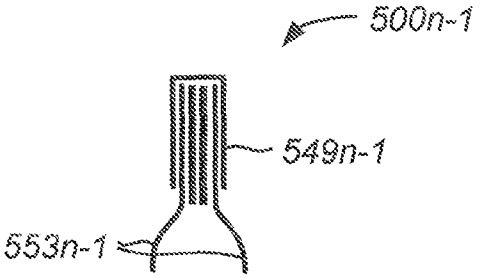

FIG. 5N-1

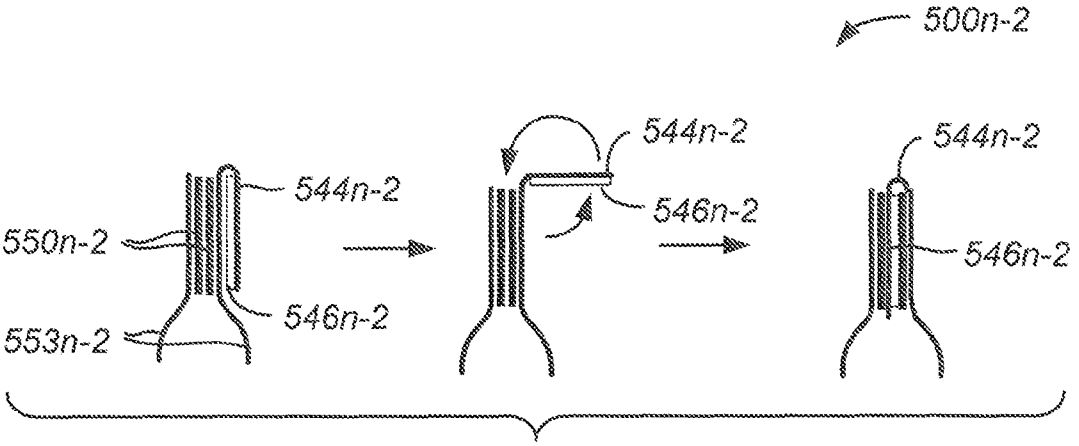

FIG. 5N-2

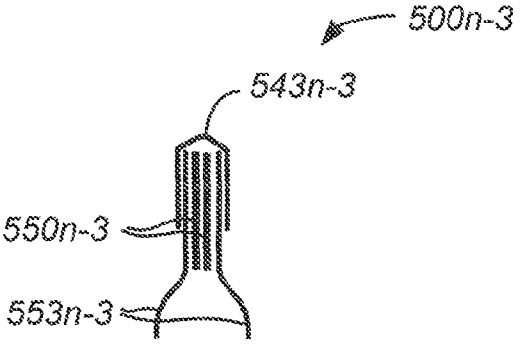

FIG. 5N-3

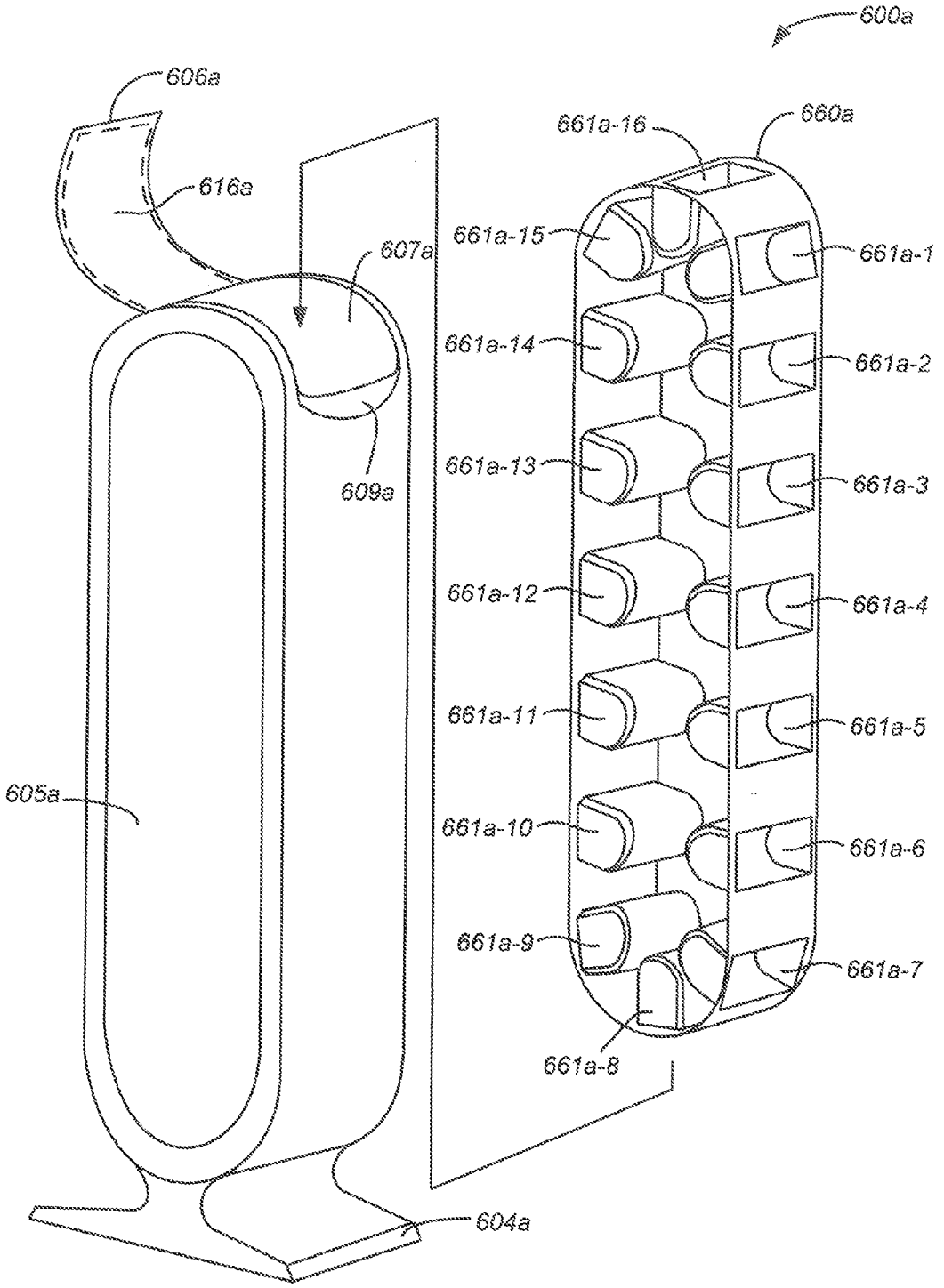
600a
606a
616a
607a
609a
605a
604a
660a
661a-16
661a-15
661a-14
661a-13
661a-12
661a-11
661a-10
661a-9
661a-8
661a-1
661a-2
661a-3
661a-4
661a-5
661a-6
661a-7

FIG. 6A

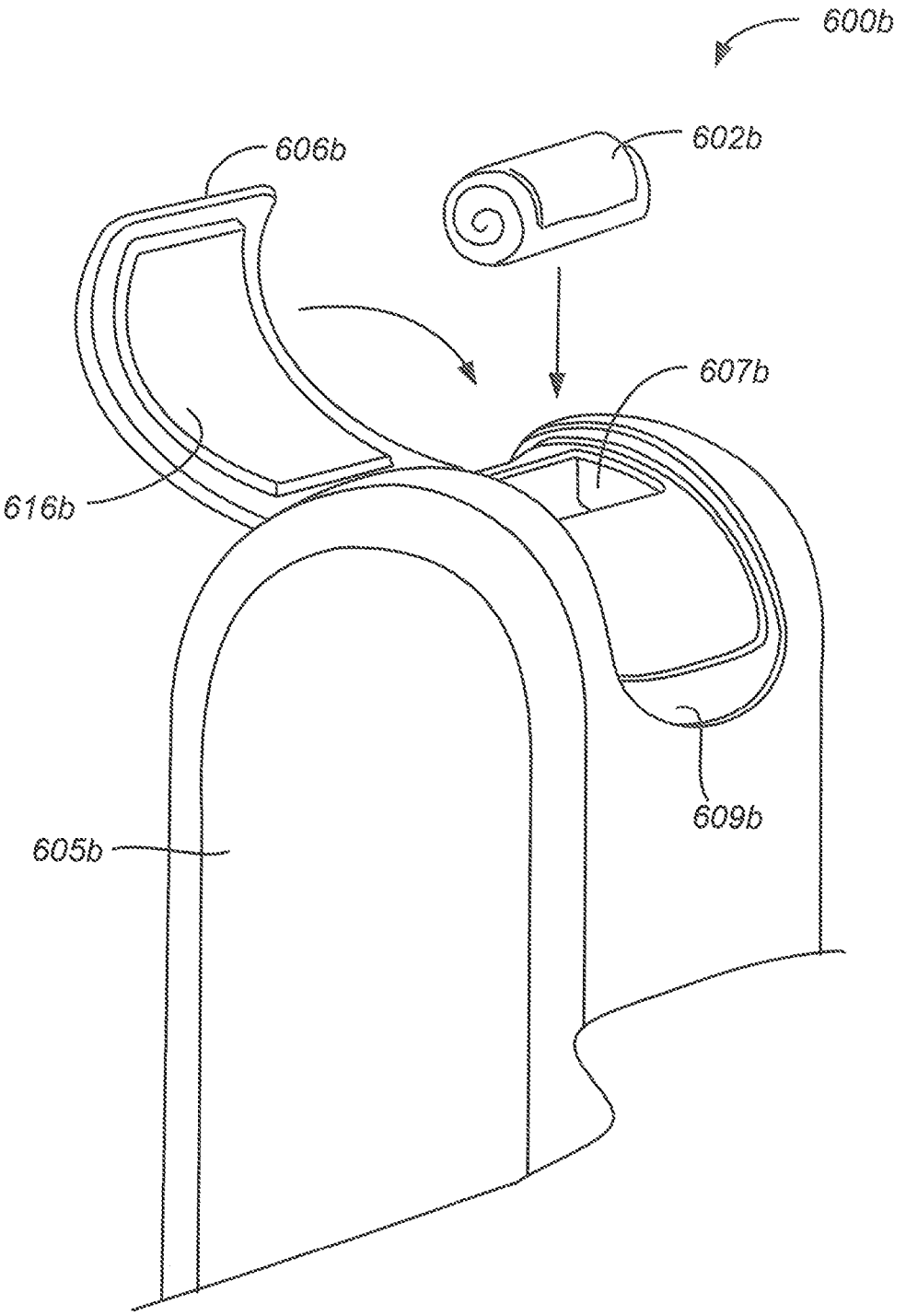

FIG. 6B

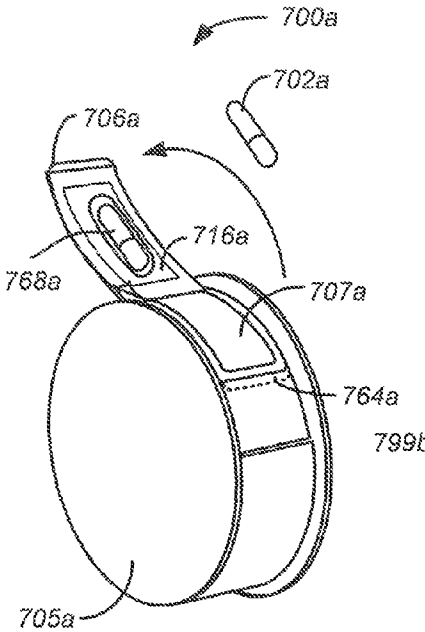

FIG. 7A

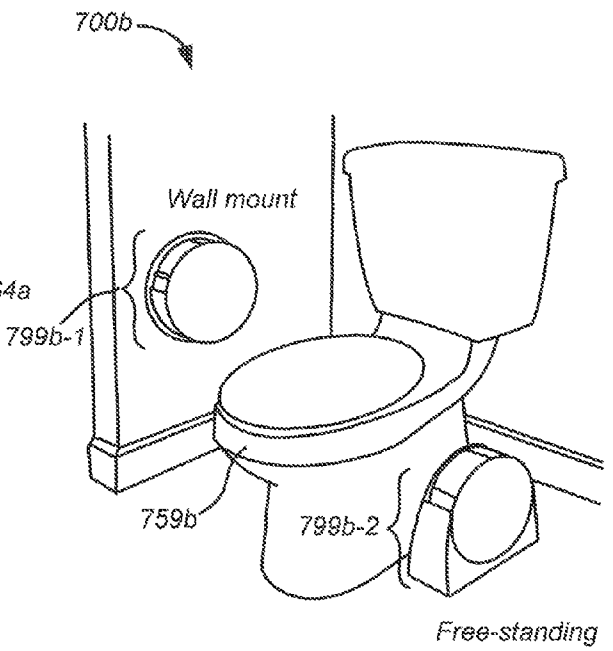

FIG. 7B

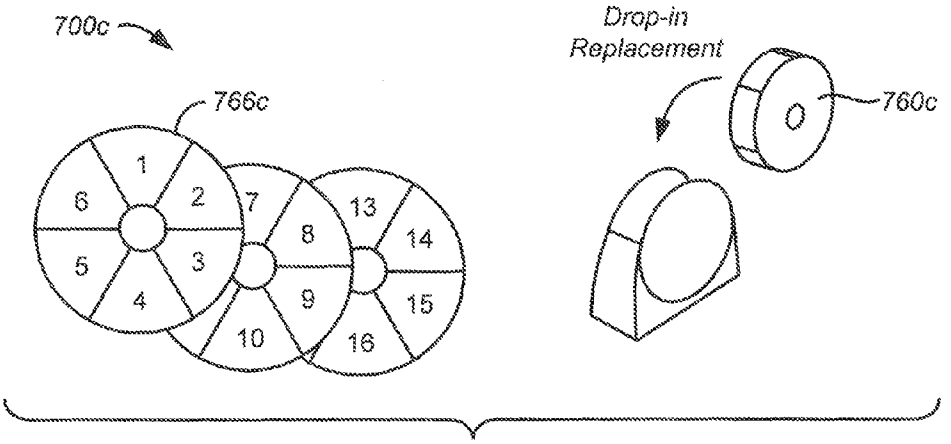

FIG. 7C

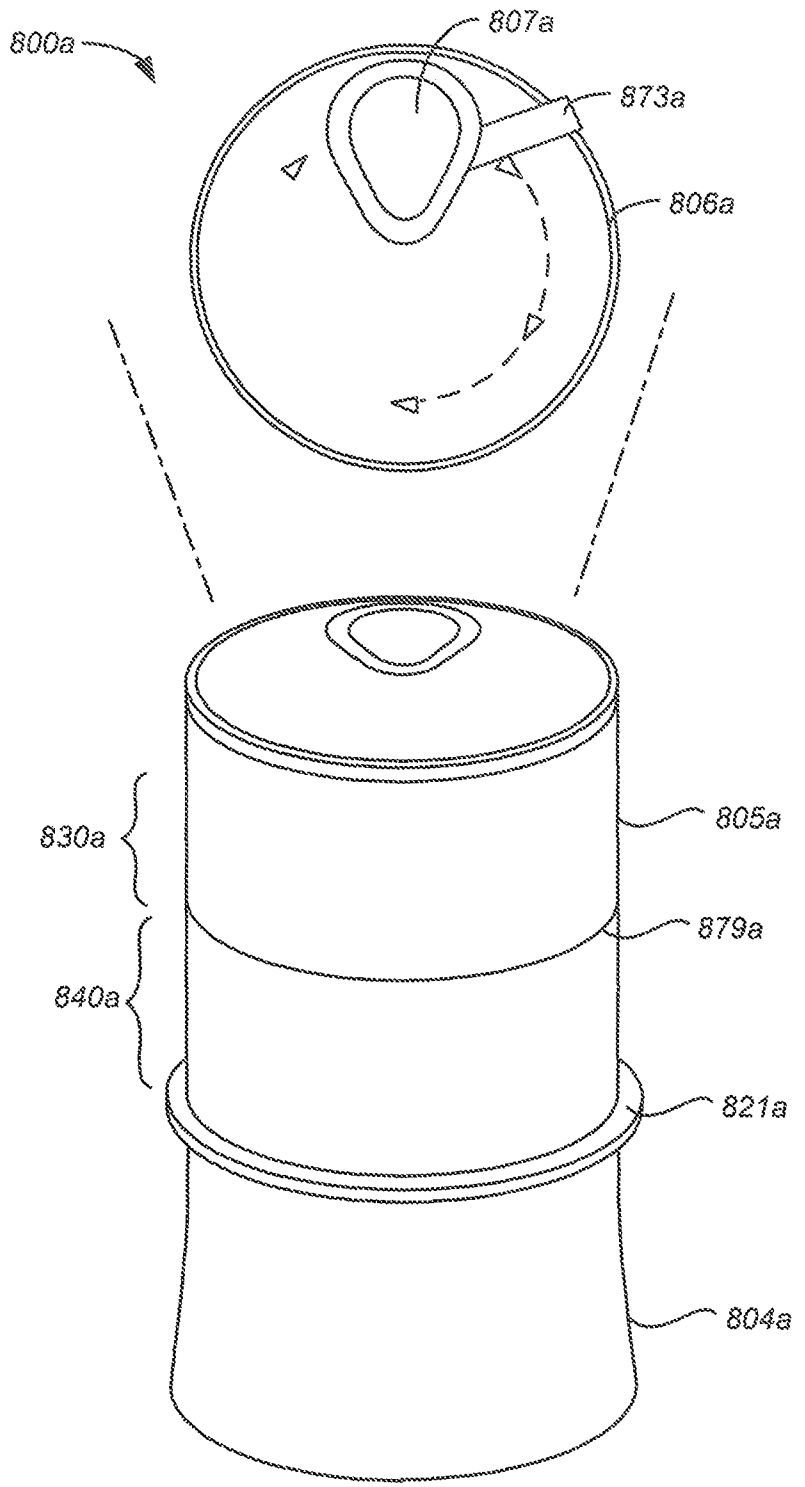

FIG. 8A

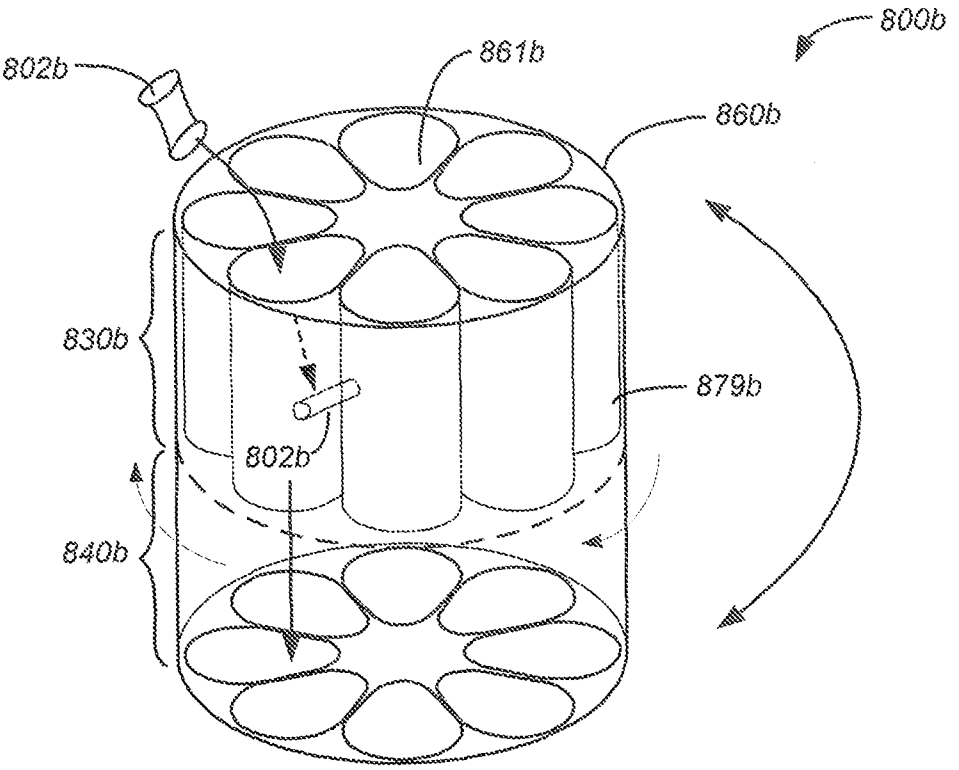
800b
802b
861b
860b
830b
879b
802b
840b

FIG. 8B

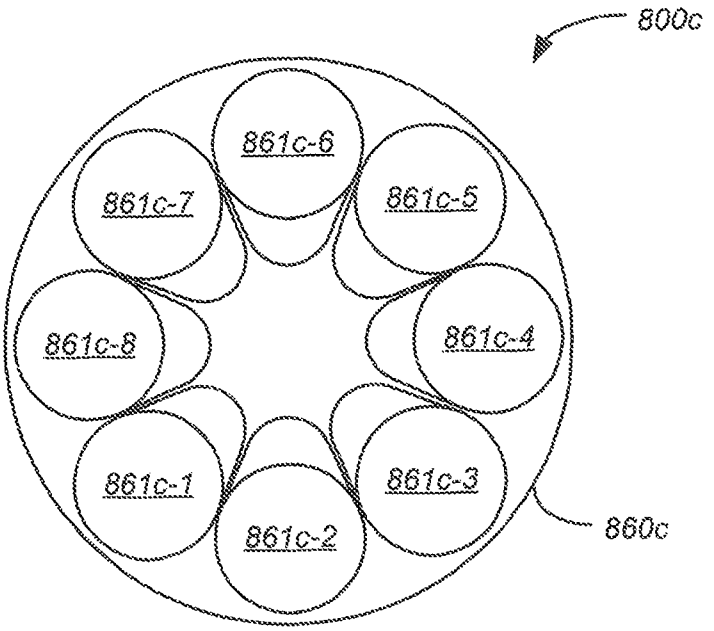
800c
861c-6
861c-7
861c-5
861c-8
861c-4
861c-1
861c-3
861c-2
860c

FIG. 8C

WASTE DISPOSAL APPARATUS

CROSS REFERENCE TO RELATED APPLICATIONS

This non-provisional patent application claims the benefit of earlier filing date and right of priority to pending U.S. Provisional Patent Application No. 61/798,121, filed Mar. 15, 2013, entitled "Waste Disposal Apparatus." The contents of which are all hereby incorporated by reference herein in its entirety.

BACKGROUND

The market experiencing urinary incontinence (UI) is large; UI affects 200 million people worldwide, and is growing with the aging population with estimates of perhaps doubling by 2050, based on the incidence of pelvic floor disorders projected alone. There is embarrassment, as most women will not even discuss this with their health professional so they likely do not use correct products to help eliminate germs and odor. The feminine hygiene market is also large with over 60 million women in the prime menstruating years of 14-44 in the US alone. Disposing of feminine hygiene/menstrual or light bladder control products can be messy, awkward, and embarrassing, as well as cause problems with septic systems, water systems, old plumbing or with pets. Men and women with light bladder control incontinence often need to empty the trash frequently to prevent odor build up or embarrassment and some do not like to visit friends out of fear of having to put this product in a friend's trash.

SUMMARY

The instant invention relates generally to a waste containment system used in the disposal of adult bodily waste personal care products, such as male and female incontinence products, sanitary protection products, and similar personal care products.

BRIEF DESCRIPTION OF THE DRAWINGS

Various embodiments in accordance with the present disclosure will be described with reference to the drawings, in which:

FIG. **1**A are illustrative examples of a free-standing storage disposal unit in which various embodiments can be implemented;

FIG. **1**B is an illustrative example of a free-standing storage disposal unit in which various embodiments can be implemented;

FIG. **1**C is an illustrative example of a free-standing storage disposal unit in which various embodiments can be implemented;

FIG. **2**A is an illustrative example of a free-standing storage disposal unit in which various embodiments can be implemented;

FIG. **2**B is an illustrative example of a free-standing storage disposal unit in which various embodiments can be implemented;

FIG. **3**A is an illustrative example of a hanging disposal unit in accordance with at least one embodiment;

FIG. **3**B-**1** is an illustrative example of a hanging disposal unit in accordance with at least one embodiment;

FIG. **3**B-**2** is an illustrative example of a hanging disposal unit in accordance with at least one embodiment;

FIG. **3**C-**1** is an illustrative example of a hanging disposal unit in accordance with at least one embodiment;

FIG. **3**C-**2** is an illustrative example of a hanging disposal unit in accordance with at least one embodiment;

FIG. **3**D is an illustrative example of a hanging disposal unit in accordance with at least one embodiment;

FIG. **4**A is an illustrative example of a portable pod-type disposable disposal unit accordance with at least one embodiment;

FIG. **4**B is an illustrative example of an expandable type disposable disposal unit accordance with at least one embodiment;

FIGS. **5**A-**5**D are illustrative examples of a portable pod-type disposable disposal unit in accordance with at least one embodiment;

FIGS. **5**E-**5**H are illustrative examples of a cross section of a pod-type disposal in accordance with at least one embodiment;

FIGS. **5**I-**5**M are illustrative examples of a pouch-type disposable disposal cartridge in accordance with at least one embodiment;

FIG. **5**N-**1** is an illustrative example of a cross-section view of a pouch-type disposal unit in accordance with at least one embodiment;

FIG. **5**N-**2** is an illustrative example of a cross-section view of a pouch-type disposal unit in accordance with at least one embodiment;

FIG. **5**N-**3** is an illustrative example of a cross-section view of a pouch-type disposal unit in accordance with at least one embodiment;

FIGS. **6**A-**6**B are illustrative examples of a standing belt-type disposal unit with disposable cartridge refill, which may be in vertical, horizontal, round, elliptical or other shape in accordance with at least one embodiment;

FIGS. **7**A-**7**C are illustrative examples of a wall mounted or floor standing rotating disposal unit with disposable cartridge refill in accordance with at least one embodiment; and

FIGS. **8**A-**8**C are illustrative examples of an invertible pod storage disposal unit in accordance with at least one embodiment.

DETAILED DESCRIPTION OF THE INVENTION

In the following description, various embodiments will be described. For purposes of explanation, specific configurations and details are set forth in order to provide a thorough understanding of the embodiments. However, it will also be apparent to one skilled in the art that the embodiments may be practiced without the specific details. Furthermore, well-known features may be omitted or simplified in order not to obscure the embodiment being described.

Techniques described and suggested herein include system and apparatus directed to a waste disposal apparatus for discreet and hygienic disposal of used bodily waste products. Such embodiments include an apparatus configured to receive bodily waste products, such as tampons, pads, liners, briefs, condoms, wipes etc. (herein also referred to as "personal hygiene products," "personal care products," "bodily waste products," or "adult care products").

Containment storage includes disposable, reusable and refillable containers. Example embodiments of storage containers for disposing of personal hygiene products can include, for example, a multi-chambered, storage drop-in component, a honeycomb configured insert, a tube rotation expanded by a movement, trap-door units, a slide-and-drop refuse repository and many more example embodiments for temporarily storing discarded personal hygiene products.

These containers can be configured, in some example embodiments, to include an odor treatment and/or a hydro-proofing treatment such that any deposited used product will generally not emit a smell or leak a substance once put into the unit.

Additional types of waste disposal apparatuses can include portable or individual containers, referred to herein as "pods." Pods may vary in size for different sized feminine products, there could be one-size-fits-all pods or many sizes of pods that are correlated with different sizes of feminine hygiene products currently available. For example, as is known, there are many brands of feminine hygiene products, and the many brands make many different types and sizes.

Example embodiments of a pod can be manipulated with one hand but can be used with both hands in a manner that enables a user to dispose of the used personal hygiene product in a sanitary manner. The pods can be configured, in some example embodiments, to include an odor treatment and/or a hydro-proofing treatment such that any deposited used product will not emit a smell or leak a substance after the pod is closed. Example embodiments of a pod may include multiple different sealing mechanisms.

For example, panty-liners may be considered one of the smaller products and incontinence pad product may be considered one of the larger products. In addition, tampons also come in various shapes and sizes. However, one of the primary differences between disposing of a pad versus a tampon is the entire physical pad is thrown away, in addition to possibly the wrapper or other components of a new pad being replaced, whereas, for a tampon, often, only the applicator and possibly the wrapper are being disposed of in a container versus the toilet for the tampon itself. Therefore, example embodiments may include a specified different size or different products or a same-sized embodiment that is configured to be large enough for the largest, or approximate largest feminine hygiene product available.

Providing successful odor control of used personal hygiene products includes many possibilities. Example embodiments presented herein include mechanisms for controlling odor based on containment (e.g., sealing or using a barrier), neutralizing and masking.

Example embodiments presented herein, may include any number of odor control processes. Examples of odor control may include, a film with a heat seal, a film with a cohesive seal (e.g., cling wrap) and other methods of sealing a container (e.g., twist seals, zip seals, tin-tie tops, flap/flap seals). Alternative examples of possible odor control may include a honeycomb pocket or container, a rolling seal, a dip soiled material as a sealant, a membrane push through seal, and many additional methods currently known or hereinafter developed for the purposes of sealing compartments to retain odor.

Methods of odor control may need to address control and/or compensate for odors from chemicals impregnating the film, unit or component thereof, where using substances to counteract or prevent odors could include, for example, charcoal, oxidation, sprays, etc.

In addition to odor control, example embodiments are configured to provide for safety of absorbency, leakage, bacteria or other pathogens that may be a hazardous side effect of the used personal hygiene product. For example, absorbency and/or leakage may be compensated for, according to example embodiment, by using/employing hydrophobic materials that maintain different levels of absorbency or hydro-resistance.

In addition to absorbing concerns, used personal hygiene products can contain bio-hazardous materials that can carry and spread pathogens if not disposed of properly. For example, blood, uric acid, fecal matter and other bodily byproducts contained in or on a used personal hygiene product can contain bacteria from different customers such that improper disposal of these products may cause the spread of the bacteria. For example, currently, public restrooms for women generally have small metal containers with insufficient linings, including a small bag placed, but not secured, inside the container. Generally, public restrooms for men do not have anything other than a general garbage can that would be used to dispose of any personal hygiene products. The insufficient containment of such products can be considered a health and safety problem for those persons that must dispose of the contents of the garbage or containers, and can similarly be hazardous for other users of the products that may be exposed to a disposed product.

In addition to public hazards caused by the improper disposal of used personal hygiene products, largely due to insufficient resources/alternatives for disposal, households may similarly be exposed to such pathogens. Products merely placed in trashcans, even those with lids, and even if wrapped in toilet paper or plastic, can still catch the attention of children and pets. Example embodiments provide for a hygienic, discreet and private way of disposing of used personal hygiene products in a manner providing a healthy, private and safe way.

FIG. **1**A is an illustrative example of a freestanding storage disposal unit in which various embodiments **100***a* can be implemented. According to one example embodiment, FIG. **1**A includes a waste disposal apparatus **199***a* for use with personal hygiene products according to an example embodiment **100***a*. The waste disposal apparatus includes an outer base **104***a* and an upper rim **111***a* that operably interconnects the outer container **105***a* with the inner lid component **109***a*, such that in some example embodiments the inner lid is removable from the outer container. In alternative example embodiments, the base **104***a* can be removable from the outer container **105***a*, and in still other embodiments, both the inner lid and base are removable from the outer container **105***a*.

The inner lid **109***a* provides support for the cover **106***a*, which can be operably interconnected to the inner lid via a hinge (not shown). In an example embodiment in which the cover **106***a* is electronically attached to the inner lid **109***a*, a sensor **108***a* is connected to provide automatic opening functionality where the sensor can be powered via a battery or cord. When the cover is in an open position, as illustrated, an outer compartment opening **107***a* is available. The cover **106***a*, in some example embodiments is configured open in a vertical direction (as shown) and in some example embodiments the cover **106** can open via a horizontal motion.

Alternative example embodiments include activation mechanism for a top or entry location for a used product to be spring loaded and operated by foot, hand or pressure from the arm or knee, or battery powered. A motion detector may be used.

FIGS. **1**B and **1**C illustrate example embodiments of a cross section of waste disposal apparatus **199***a* in an open and closed position, respectively.

FIG. **1**B illustrates an example embodiment of the waste disposal apparatus in an open position **100***b*. A user **101***b*, having already engaged the outer opening mechanism **108***b*, is able to dispose of a soiled personal hygiene product **102***b* into a first inner opening compartment **130***b*. In one example embodiment, the first inner opening compartment is located within an inner disposable collar being operably interconnected to a liner **115***b*, which is located internally to the outer container **105***b*, spanning the first inner opening compartment **140***b*, where the first and second inner opening compartments are separated by an inner movable gate **120***b*, which is illus-

trated in a closed position. In some example embodiments, the inner movable gate **120***b* is operable to open into an inner gate compartment **122***b*, where the inner gate compartment may, in some embodiments, be connected with an outer collar **145***b* (described in detail in FIG. **2**B).

FIG. **1**C illustrates an example embodiment of the waste disposal apparatus in a closed position **100***c*. The user **101***c*, having released the personal hygiene product (PHP) **102***b* into the first inner opening compartment **130***c* and moves the cover **106***c* to a closed position. At or around the point where the cover **106***c* is placed into the closed position, the cover or a component thereof (not shown) releases the inner movable gate **120***c* into the inner gate compartment **122***c*. In an example embodiment in which the inner movable gate **120***c* is in an open position (as shown in FIG. **1**C), the PHP **102***c* is able to move from the first inner opening compartment **130***c* into the second inner opening compartment **140***c*, at which point the PHP **102***c* falls toward the bottom of the liner **115***c* located within the outer container **105***c*. In some example embodiments, at or around the point where the PHP **102***c* passes by or through the inner movable gate **120***c*, the inner movable gate returns to closed position (as illustrated in FIG. **1**B). At which point, the contents of the liner **115***c* are no longer visible if the cover **106***c* were to be opened.

FIG. **2**A illustrates the waste disposal apparatus **299** in a closed position **200***a*. As in FIG. **1**A, the waste disposal apparatus includes an outer container **205***a* operably interconnected between a base **204***a* and a rim of the container **211***a*. In the example embodiment of FIG. **2**A, the cover **206***a* is configured to be opened by a manual operation, such as a push, of an outer opening mechanism **208***a*. In alternative example embodiments, the cover **206***a* can be opened manually by a pull on the outer opening mechanism.

FIG. **2**B illustrates an example embodiment **200***b* of at least some of the internal components of the waste disposal apparatus **299**. The outer container **205***b* is interconnected with the cover **206***b* via a hinge **203***b*. In alternative example embodiments, the cover and the outer container could be interconnected in another manner. In the example embodiment of FIG. **2**B, the waste disposal apparatus **299** includes two components, a liner **215***b* (with additional components) and an outer collar **245***b*. The liner **215***b* is interconnected with an inner always-concealed top, composed of, at least one embodiment, an inner collar **235***b* and an inner collar seal **213***b*. In some example embodiments, the inner collar **235***b* and the inner collar seal **213***b* are a single integrated component. In the example embodiment of FIG. **2**B, the liner **215***b* and interconnected components are configured to be placed inside the outer container **205***b*.

The outer collar **245***b*, which can be operably interconnected with an outer interlocking mechanism **212***b*, are configured to be placed over or on top of the liner **215***b* (and associated interconnected components **235***b* and **213***b*). The outer interlocking mechanism **212***b* can, in some example embodiments be connected with the outer container **205***b* via a twisting motion or a snapping motion or can be one piece.

In an example embodiment in which the liner **215***b* is located inside the outer container **205***b* and the outer collar **245***b* is closed or covered over the liner, the inner opening compartment of the outer collar **245***b* create an opening into the liner **215***b*. The opening can be covered when the cover **206***b* is in the closed position (as illustrated in FIG. **2**A).

In some example embodiments, the liner **215***b* and interconnected components **235***b* and **213***b* can be disposable such that the contents of the liner **215***b*, such as any PHP are never touched. As illustrated in FIG. **1**B and **1**C, the inner movable gate (not shown) is located within the inner collar such that the opening and closing of the gate is accomplished as illustrated and described in connection with FIGS. **1**B and **1**C.

FIG. **3**A is an illustrative example of waste disposal apparatus in a closed position **300***a* according to at least one embodiment. An example embodiment of the waste disposal apparatus includes an outer container **305***a* operably interconnected to an outer cover **306***a*, where the outer container is attached to the cover by a hinge **303***a*. In alternative example embodiments, the outer container **305***a* being attached to the cover **306***a* via a screw top cover connected into threads of the cover, another example embodiment includes a cover that is a pull/push cover, which is opened via a user by pulling on the cover away from the outer container.

FIG. **3**B-**1** is an illustrative example of a cross-section view **300***b*-**1** of a waste disposal apparatus in accordance with at least one embodiment. An example embodiment of the waste disposal apparatus can include an outer container being operatively connected to a cover **306***b*-**1** by a screw-hinge **303***b*-**1**, and where the outer container is further operatively coupled a handle **317***b*-**1**. In some example embodiments, the hinge **303***b*-**1** is located on the handle **317***b*-**1**, and one method of opening the cover of the outer container is to push on the back of the cover manually in the direction of the handle.

Alternative example embodiments of the FIG. **3**B-**1** include a user (not shown) manually lifting the cover **306***b*-**1** in order to dispose of a personal hygiene product **302***b*-**1**. In one example embodiment, the personal hygiene product **302***b*-**1** is placed into a first inner opening compartment **330***b*-**1**, where it will remain until the cover is closed. In some example embodiments, the cover **306***b*-**1** is configured to close automatically without further user input. In other example embodiments, while the cover **306***b*-**1** is in an open position, the personal hygiene product **302***b*-**1** remains in the first inner opening compartment **330***b*-**1** due to the inner moveable gate **320***b*-**1** being in a closed position. In the example embodiment, at or near the time the cover **306***b*-**1** closes, the inner moveable gate **320***b*-**1** is configured to drop to an open position (see FIG. **3**B-**2**). FIG. **3**B-**2** illustrates a waste disposal apparatus with a cover in a closed position **300***b*-**2** in accordance with at least one embodiment. In the example embodiment of FIG. **3**B-**2**, the waste disposal device includes an outer container **305***b*-**2** being operably interconnected with a handle **317***b*-**2** and a cover **306***b*-**2**. In some example embodiments, the handle can be an integrated part of the container, such that the handle and container were molded together. After the personal hygiene product **302***b*-**2** is placed into the first inner compartment **330***b*-**2**, and the cover **306***b***2** is closed, an inner movable gate **320***b*-**2** reacts to the cover closing by dropping from a closed position to an open position. In response to the inner movable gate opening, the personal hygiene product **302***b*-**2** having been located in the first inner compartment **330***b*-**2**, falls into the second inner compartment **340***b*-**2**. In some example embodiments, the inner moveable gate **320***b*-**2** may be attached to a spring mechanism (not shown), such that the inner movable gate returns to a closed position after the personal hygiene product **302***b*-**2** has moved from the first inner compartment **330***b*-**2** to the second inner compartment **340***b*-**2**. Alternative example embodiments include the gate **320***b*-**2** being mechanically returned to a closed position, such as using a counterweight or through gravity.

FIG. **3**C-**1** illustrates a waste disposal apparatus hanging **300***c*-**1** from a garbage pail in accordance with at least one embodiment. The example embodiment includes a garbage pail **314***c*-**1** being used as a supporting device to hang an embodiment of the waste disposal device. More specifically, in example embodiment of FIG. **3**C-**1**, a container **305***c*-**1** is

interconnected with a rim of a container **311***c*-**1**, which is further interconnected with a cover (the embodiment of FIG. **3**C-**1** illustrating the underside of the cover, labeled **316***c*-**1**) via a hinge or other connection mechanism **303***c*-**1**. In the example embodiment, the container cover, when in an open position provides for an outer compartment opening **307***c*-**1** through which a user can dispose of a personal hygiene product **302***c*-**1**.

FIG. **3**C-**2** illustrates a waste disposal apparatus hanging **300***c*-**2** un-mounted from a garbage pail in accordance with at least one embodiment. The example embodiment includes a garbage pail **314***c*-**2** being used as a supporting device for which the outer container **305***c*-**2** was interconnected with, possibly via a handle, such as the handle **317***b*-**1** as described in connection with FIG. **3**B-**1**. The example embodiment disclosing the outer container being interconnected with a removable base **321***c*-**2** and a cover **306***c*-**2** connected via a removable hinge **318***c*-**2**. In other words, the outer container **305***c*-**2** can be decoupled from the base and the cover in order to provide, for example, a method of releasing an inner liner (not shown), such as the liner **215** as described and illustrated in connection with FIG. **2**B and replacing the removed liner with a fresh liner.

Alternative example embodiments, the container **305***c*-**2** could contain a liner which when filled with soiled personal hygiene products, can be removed and replaced with a fresh liner without a user having to view or touch the soiled products. For example, the liner may be an opaque liner placed into the outer container **305***c*-**2** via an outer compartment opening **307***c*-**2** or the liner could be placed into the outer container via the opening formed when the base **321***c*-**2** is removed from the container. When a liner is being removed from the opening formed by the removal of the base **321***c*-**2**, the user can drop the lining through the outer container and twist the bag as reaches the bottom using a twist mechanism inside the bottom portion of the outer container. In such an example embodiment, the user has released the liner bag, possibly according to a releasing mechanism on the outside of the outer container or the cover, allowed the liner bag to drop through the bottom of the outer container, and close the bag without ever having seen the contents.

FIG. **3**D is an illustrative example of a hanging disposal unit in accordance with at least one embodiment. The outer container **305***d* can be created in a number of sizes based on an attachment point, where the attachment point could be a small hook, such the holding attachment component **319***d* or a larger object such as a shelf, a doorframe, a toilet bowl or the like. The example embodiment of FIG. **3**D discloses a backside view of the waste disposal apparatus, including an outer container **305***d*, a handle **317***d*, a cover **306***d*, and a hinge **303***d*, where the cover and hinge are shown in an expanded view.

Alternative embodiments are capable of being combined with or coated with an adhesive mechanism to create a seal over the entire surface or a portion thereof that allows for easy attachment, removal or replacement of the entire container or any component thereof For example, such examples of the container may be used or attached to a wall component **319***d*, shelf, door, or other available surface within ease of access to the (toilet) such that the unit may be attached thereto and removed or replaced at the need or convenience of the user. Such example embodiments may be a reusable container or a disposable container. Alternative example embodiments of the present invention can include an apparatus or receptacle being interconnected with or attached to a home/office surface that is non-harmful to the surface, such as through hanging or suction.

FIG. **4**A is an illustrative example of a portable pod-type disposal cartridge **400***a* accordance with at least one embodiment. At a first step, labeled **1** of FIG. **4**A, a user **401***a* is holding a pod-type disposal apparatus in a flat position. In some example embodiments, the pod may arrive from a manufacturer in a flat stored position or in another form, similarly the pod may arrive in a flat stored position inside a small container, such as a plastic or paperboard container to protect the pod. Continuing at step **1**, the pod includes a hinge component **450***a*, a center compartment **454***a*, which at Step **1** has little to no volume in the flat store position, and two edges, one may be a male edge, such as the raised ridge **451***a* and one may be a female edge, such as the recessed ridge **452***a*.

Further example embodiments of FIG. **4**A include the pod closure being a sealing surface, where the closure may include tape or surfaces that adhere when pressed together. Alternative example embodiments include multiple forms closure materials in order to ensure a waterproof and odor-free, or nearly waterproof and/or nearly odor-free seal. The rim **450***a* may further include a thermo-form flange or other compression molding mechanism for interconnecting two sides of a component. Continuing the example embodiment of FIG. **4**A, the user **401***a* may be placing a personal hygiene product **402***a* into the pod opening **454***a*, at which point, moving to Step **2**, the user may push onto the pod opening **454***a*, with even a small amount of pressure, in order to expand the extendable compartment **453***a* of the pod. As the user **401***a* places the personal hygiene product **402***a* into the pod extendable compartment in its entirety, the user **401***a*, moving to Step **3**, can close the two halves **451***a* and **452***a*, at the living hinge **450***a*, in order to seal the pod disposal apparatus completely.

FIG. **4**B is an illustrative example of an expandable cartridge-type disposal unit **400***b* accordance with at least one embodiment. The disposal unit may include a pod-holding component **457***b*, such as a plastic, paperboard or other suitable material, for containing the pod in a flattened state for travel. In the example embodiment of FIG. **4**B, the pod may include a top rim **450***b*, a bottom rim **455***b* and an extendable compartment **453***b*. At a time when a user, such as the user **401***a* described and illustrated in connection with FIG. **4**A, decides to use the pod, the user would remove the pod-holding component **457***b* and the pod would "spring" open. For example, one embodiment of the pod of FIG. **4**B may include structured ribs **456***b* that cause the pod to effectively unwind into a standing form upon release from its enclosure. The pod may contain a diaphragm-type trap **458***b* for a user to place a product to dispose of, in which the diaphragm traps the product inside. The pod of FIG. **4**B may also contain a double-sided bag, such that it provides for additional strength, odor-protection, and sealability. In alternative example embodiments of the pod, the pod in its extended form may include a rigid bezel and a rigid base in order to support the structure from falling to a side or rolling over, possibly causing the contents to move or shift.

FIG. **5**A is an illustrative example of a portable pod-type disposal cartridge in accordance with at least one embodiment **500***a*. According to the example embodiment, a pod in which a semi-rigid rim **550***a*, which is operably interconnected with a compressed and/or flattened flexible bag-like component **553***a*. The rim **550***a* and the bag-like component **553***a* either may be formed from the same material, or may be different materials that are joined or sealed together. The rim **550***a* has an integrated hinging feature **542***a* (that is formed within the rim). In some example embodiments, the hinging

feature may be of a same material as the rim itself, or may be formed using other material(s).

FIG. **5**B-**1** is an illustrative example of a portable pod-type disposal cartridge in accordance with at least one embodiment **500***b*-**1**. FIG. **5**B-**1** illustrates similar elements and components of FIG. **5**A, including, the bag-like component **553***a* from FIG. **1** with the bag-like component **553***b*-**1** being in an expanded position. The example embodiment further includes the opening of the pod, **554***b*-**1** as the volume is increased based, at least, on the expansion. FIG. **5**B-**1** further illustrates the hinging feature of the pod, **542***b*-**1** and the rim **550***b*-**1** of the pod. Expansion of the bag-like component **553***b*-**1** may occur through manual expansion by the user or may occur when the pod is removed from container. When expanded, the bag-like component **553***b*-**1** forms an interior volume of sufficient size to contain at least one type of refuse placed inside the bag-like component **553***b*-**1**.

FIG. **5**B-**2** is an illustrative example of a portable pod-type disposal cartridge in accordance with at least one embodiment **500***b*-**2**. The example embodiment of FIG. **5**B-**2** illustrates similar components and elements as illustrated and described in connection with FIG. **5**B-**1**, including, for example, the opening of the pod, **554***b*-**2** as the volume is increased based, at least, on the expansion. FIG. **5**B-**2** further illustrates the hinging feature of the pod, **542***b*-**2** and the rim **550***b*-**2** of the pod, and with the bag-like component **553***b*-**2** expanded. In this example embodiment, the bag like component **553***b*-**2** is formed with pleats **556***b*-**2** or other geometric feature(s) to facilitate easy expansion of the portable pod-type disposal apparatus. Example embodiments of the pleats **556***b*-**2** or other geometric feature(s) also offer additional expansion volume at the sides and base of the bag like component **553***b*-**2**.

FIG. **5**C is an illustrative example of a portable pod-type disposal cartridge in accordance with at least one embodiment **500***c*. The example embodiment of FIG. **5**C includes similar elements as described and illustrated in connection with FIGS. **5**A, **5**B-**1**, and **5**B-**2**, in which the example embodiments illustrated the pod-type disposal apparatus being closed via a folding at hinging feature **542***c*. As the closing is performed, the two sides of the rim **550***c* move toward each other, after a user would place personal hygiene products **502***c* into the interior volume of the pod-type disposal apparatus.

FIG. **5**D is an illustrative example of a portable pod-type disposal cartridge in accordance with at least one embodiment **500***d*. The example embodiment of FIG. **5**D illustrates similar components and elements as FIGS. **5**A-**5**C, including in which the example embodiments illustrated the pod-type disposal apparatus being closed via a folding at hinging feature **542***d*. As the closing is performed, the two sides of the rim **550***d* move toward each other, after a user would place personal hygiene products **502***d* into the interior volume of the pod-type disposal apparatus. FIG. **5**D further illustrates the portable pod-type disposal apparatus being in a fully closed position, such that the two sides of the rim **550***d* are interlocked in some manner. In some example embodiments, when the folded halves of the rim **550***d* are engaged with each other, the two sides create a water and odor resistant seal.

In an alternative example embodiment of the pod-type disposal apparatus, the pod or components thereof may be formed or manufactured using a variety of materials, for example: manmade fiber materials such as non-woven materials; manmade materials, such as plastic resin like Styrene, Polyethylene and Polypropylene; natural fibers, such as paperboard and bamboo (virgin and recycled); hydrophobic coatings that prevent moisture leakage; manmade and natural anti-microbial agents, to prevent bacterial growth (coating and additive).

FIGS. **5**E-**5**H illustrate cross-section views A-A of FIG. **5**D. The example embodiments of FIGS. **5**E-**5**H include all or most of the same components as the example embodiments of FIGS. **5**A-**5**D; however, the below example embodiments describe various methods to attain a water and odor-resistant seal when the rim **550***d* is folded together as illustrated in FIG. **5**D.

FIG. **5**E is an illustrative example of a cross section **500***e* of a pod-type disposal cartridge in accordance with at least one embodiment. The example embodiment of FIG. **5**E illustrates a rim **550***e* including one or more male/female engagement ribs and channels, such that a male rib **551***e* is pressed to fit by the user into the female channel **552***e* in order to form a seal. However, in this example embodiment, the male rib **551***e* fails to penetrate or fully penetrate the female channel **552***e* causing the seal to fail.

FIG. **5**F is an illustrative example of a cross section **500***f* of a pod-type disposal cartridge in accordance with at least one embodiment. The example embodiment of FIG. **5**F illustrates a rim **550***f* including a one- or two-part adhesive, such that the two adhesive members **546** form a seal when in contact with each other.

FIG. **5**G is an illustrative example of a cross section **500***g* of a pod-type disposal cartridge in accordance with at least one embodiment. The example embodiment illustrates a rim **550***g* including one or more male/female engagement rib(s) and channel(s). In the example embodiment of FIG. **5**G, the male rib(s) **551***g* is press fit by the user into female channel(s) **552***g* to form the seal with the male rib(s) **551***g* penetrating the female channel(s) **552***g* fully. The male features above could be one or more "POSTS" instead of ribs (with a matching change to the female portion).

FIG. **5**H is an illustrative example of a cross section **500***h* of a pod-type disposal cartridge in accordance with at least one embodiment. The example embodiment illustrates the rim **550***h* being sealed or closed with one or more external clips to be provided with the pod or in connection with the pod. In the example embodiment, the clip **553***h* is a separate component from the pod; however, alternative example embodiments may include a clip being operably interconnected with the pod or being an integral feature of the rim.

FIG. **5**I is an illustrative example **500***i* of a pouch-type disposal cartridge in accordance with at least one embodiment. The example embodiment discloses an alternative style of a pod disposal apparatus in which a semi-rigid rim, which is attached to a compressed/flattened flexible bag-like component **553***i*. The rim **550***i* and the bag-like component **553***i* either may be formed from the same material, or may be different materials that are joined or sealed together. The rim **550***i*, in some example embodiments, may be configured to have an integrated flexing feature(s) **549***i* (that may be formed within the rim). The flexing feature may be of same material as the rim itself, or may be formed using other material(s).

FIG. **5**J is an illustrative example **500***j* of a pouch-type disposal cartridge in accordance with at least one embodiment. The example embodiment discloses similar elements as the embodiment in FIG. **5**I; however, the bag like component **553***j* is formed with pleats, folds, or other geometric feature(s) **548***j* to facilitate easy expansion. The pleats, folds, or other geometric feature(s) may also offer additional expansion volume at the sides and base of the bag like component.

FIG. **5**K is an illustrative example **500***k* of a pouch-type disposal cartridge in accordance with at least one embodiment. The example embodiment discloses similar elements as

the embodiment in FIG. **5**I and **5**J with the bag-like component **553***k* in an expanded state. In some example embodiments, expansion of the bag-like component occurs through manual expansion by the user when the user applies a squeezing/compression force to the flexing feature(s). In the example embodiment of FIG. **5**K, the user's applied force causes the rim component **550***k* to flex and open. When the bag-like component is opened, it forms an interior volume of sufficient size to contain at least one personal hygiene product inside the bag-like component.

FIG. **5**L is an illustrative example **5001** of a pouch-type disposal cartridge in accordance with at least one embodiment. The example embodiment discloses similar elements as the embodiment in FIG. **5**I and **5**J with the bag-like component **553***k* in an expanded state. In some example embodiments, the bag-like component is being held open via force applied at the flexing feature **5491** and after user would place personal hygiene products **5021** into the interior volume.

FIG. **5**M is an illustrative example of a pouch-type disposal cartridge in accordance with at least one embodiment **500***m* that illustrates similar elements as the embodiment in FIG. **5**L, where the bag-like component **553***k* is in an expanded state. In some example embodiments, the opening force is removed and the product is closed. When closed the halves of the rim **5501** are engaged to create a water and odor resistant seal.

FIGS. **5**N-**1**, **5**N-**2**, and **5**N-**3** illustrate similar elements as the embodiment in FIG. **5**M in cross-section A-A but with various embodiments of methods to attain a water and odor resistant seal along rim **550***n*.

FIG. **5**N-**1** is an illustrative example of a cross-section view of a pouch-type disposal unit in accordance with at least one embodiment **500***n*-**1**. In the example embodiment, the rim **550***n*-**1** is illustrated with an addition of a one or 2-part adhesive strip **546***n*-**1**. The one or 2-part adhesive strip being separately supplied and applied by the user along the outside surfaces of the rim to facilitate sealing the pod.

FIG. **5**N-**2** is an illustrative example of a cross-section view of a pouch-type disposal unit in accordance with at least one embodiment **500***n*-**2**. The example embodiment illustrates the flexible bag-like component **553***n*-**2** formed with an additional "flap" of material **544***n*-**2**, which extends from the top of the rim **553***n*-**1**. The flap **544***n*-**2** and the bag-like component **553***n*-**2** either may be formed from the same material, or may be different materials that are joined or sealed together. Flap **544***n*-**2** further contains a one or two part adhesive **546***n*-**2**. When sealing the pod, the flap **544***n*-**2** with adhesive **546***n*-**2** is rotated into the space between the halves of the rim and pressed to form a seal.

FIG. **5**N-**3** is an illustrative example of a cross-section view of a pouch-type disposal unit in accordance with at least one embodiment **500***n*-**3**. The example embodiment illustrates the rim **553***n*-**3** sealed closed with one or more external clips to be provided with the pod.

FIG. **6**A illustrates an illustrative example of a standing belt-type disposal unit in accordance with at least one embodiment. The example embodiment includes an outer container **605***a* which can be operably connected with a base **604***a*, or without a base. The container further includes a cover, the top of which **605***a* and the inside **616***a* any include different membranes or seals to help seal the odors. A cartridge component, such as a freestanding vertically presented component **660***a* includes multiple individual compartments **661***a*-**1** through **661***a*-**16** that are rotated within the tower structure in a vertical belt type rotation. The cartridge component is configured to be wholly removable without have to handle the contents of the compartments and is replaceable after it is used. The cartridge **660***a* is placed inside the outer compartment opening **907***a* and enclosed inside by closing the cover **906***a* meeting with the inner lid component **609***a*.

FIG. **6**B is an illustrative example of a standing belt-type disposal unit in accordance with at least one embodiment **600***b*. Example embodiments of FIG. **6**B disclose the outer container **605***b* already in set-up condition with the cartridge **660** located inside. A user can place a used personal hygiene product **602***b* within the outer compartment opening **607***b* at which point the cover **606***b* is closed forward to inter-seal with the lid component **609***b*. Upon closure of the cover, or approximately before or after closure, the lid is used to index the belt (cartridge) **660***a* as described and illustrated in FIG. **6**A, to a next open and clean chamber compartment **661**. Further example embodiments may include the inside of the cover **616***b* as being or containing an adhesive or other closure type that will help maintain odors and cleanliness.

FIG. **7**A a wall mounted, freestanding, or pedestal mounted waste disposal apparatus in accordance with at least one embodiment **700***a*. The waste disposal apparatus includes as an outer container **705** that is used for receiving used personal hygiene products **702***a* via an outer compartment opening **707***a*. The container **705** will include a type of cartridge or cassette used for separating the soiled products from view (See FIG. **7**C). Once the personal hygiene product **702***a* has been inserted into the cartridge, the cover **706***a* is closed down to a tab **764***a*, which is later used for reopening the cover. Upon closing the cover, the cartridge or cassette is ratcheted one position (either forward or backwards) in order to provide a clean cartridge for the next use. Additional example embodiments include the inner portion of the cover **716***a* including an adhesive or other closing mechanism, for example a magnetic mechanism, that helps prevent escape and makes the unit slightly more difficult for small children to play with. Alternative example embodiments of the waste disposal apparatus of FIG. **7**A may include a compartment **768***a* that may be used to store tampons for easy access to a fresh product after disposing of a soiled one. In some example embodiments, as the handle apparatus is rotated, possibly by a handle (not shown) or possibly by the ratcheting method of opening and closing the cover, in the determined direction, each slot or chamber that is already used can be sealed individually using an adhesive or other sealing mechanism or the entire cartridge component or cassette can be sealed in their entirety.

FIG. **7**B is an illustrative example of a wall mounted or floor standing rotating disposal unit in accordance with at least one embodiment **700***b*. In one example embodiment, the waste disposal apparatus may be wall mounted **799***b*-**1** or may be freestanding **799***b*-**2**, or both of which could be located in a bathroom in proximity to a toilet **759***b*. Alternative example embodiments of the present invention can be a freestanding unit, a wall-mounted unit, a mobile unit, a container capable of frequent movement, such as placement on the floor versus a table versus attachment to a wall.

FIG. **7**C is an illustrative example of a wall mounted or floor standing rotating disposal unit in accordance with at least one embodiment **700***c*. An example embodiment includes two types of refill types that may be included or used in the waste disposal apparatus of FIG. **7**A. A first replacement type is a cassette or group of cassettes **766***c* that each contains a number of compartments or slots to receive soiled products. The cassettes can be used to refill the wall mounted apparatus by removing a front cover from the apparatus. A second replacement type is a drop-in replacement that is a cartridge component **760***c* that can be purchased and placed

directly on the freestanding apparatus, such as **799***b*-**2** as described and illustrated in connection with FIG. **7**B.

Alternative example embodiments of the present invention could include an integrated sealer or mechanism for easy sealing of used contents for removal. Example embodiments of the present invention may be made of biodegradable materials. Example embodiments of the present invention may include a symbol or indication upon the level of contents reaching a limit or suggested time since last use. For example, an indicator light at a certain percentage filled, weight reached, or time since last change (or other point) that can be easily and discretely used to notify the contents need to be removed.

FIG. **8**A illustrates an example waste disposal apparatus configured to receive a personal hygiene product at a first stage and pass the product to a second stage for longer-term and additional room storage **800***a*. For example, further embodiments are configured as a two-stage disposal process. The two-stage process is composed of an outer container **805***a* including a primary chamber **830***a* where the soiled material is inserted and a secondary chamber **840***a* where the soiled material is held until the waste disposal apparatus is emptied.

Upon opening of a container, the primary chamber is exposed to the user. In its first state, it is empty and ready to receive soiled material. The primary chamber also blocks and seals the secondary chamber so that odor does not emanate from the secondary chamber acting as the longer-term storage chamber. When the cover **806***a* and opening of the cover **807***a* is opened, one compartment of the primary chamber is s presented to the user in the empty state (see FIG. **8**C). The user inserts the soiled material into the opening **807***a* and then closes the lid/opening by rotating the cover **806***a* in a specified direction, optionally using a handle **873***a* interconnected with the cover **806***a*.

In some example embodiments, as the handle **873***a* is rotated in the determined direction, each slot or chamber that is already used can be sealed individually using an adhesive or other sealing mechanism or the entire cartridge component, such as components **860***b* and **860***c*, can be sealed in their entirety. It should be noted that FIG. **8**A illustrates the cover being rotated in a clockwise direction, alternative embodiments may allow the cover to be rotated in a counter-clockwise direction. Upon closing the cover **806***a*, the soiled material is transferred into the secondary chamber for longer-term storage and the primary chamber is empty and ready for the next insertion process. The container **805***a* further includes a dividing component separating the two compartments **830***a* and **840***a*, a base **804***a* and a removable base structure **821***a*, which can be removed from the outer container **805***a* in order to release the storage cartridge, such as the cartridge **860***b* and replace the cartridge with a fresh one. Alternatively, removable base **821***a* can be used to release all of the used products from the secondary storage **840***b*, but leave the cartridge container **860***b* for reuse. The cartridge container **860***b* could be a reusable, washable component.

FIG. **8**B is an illustrative example of an invertible pod storage disposal unit in accordance with at least one embodiment **800***b*. The example embodiment of FIG. **8**B is a cartridge container **860***b* including two storage components, a primary storage compartment **830***b* and a secondary storage compartment **840***b*. The two storage compartments **830***b* and **840***b* can be, in one example embodiment, divided in half on a horizontal plane by a dividing component seal **879***b*, which can be employed to separate out the first and second storage compartments. As a personal hygiene product, such as a tampon **802***b* is placed into an individual compartment **861**, via an opening **807***a* as described and illustrated in connection with FIG. **8**A, the product drops through the first compartment **830***b* and, upon rotating of the handle, drops into the second compartment **840***b* for longer-term storage. While a certain number of cartridge compartments are illustrated herein, it will be known by those of skill in the art that any number of suitable cartridge components can be implemented according to the methods and systems provided and described herein.

In alternative example embodiments, the entire container is manufactured out of a paperboard material, such as corrugate, carton-type materials, or other such paperboard products, likely coated to provide an attractive outer shell. When the unit is filled, at capacity, or when it is desired, the entire device (container/unit) is intended to be thrown out without opening the unit, moving any linings or such or any other interaction between the user and the hazardous materials or waste products previously placed within. The unit can have a sealing mechanism whereby the mechanism is part of the outer structure of the container, lifts up and seals against each other and become handles for taking out the used container discretely. This can provide for future environmental use as the entire unit may be collected by some terracyling type group for safer waste control. The device can be sold in the store or shipped to the consumer erected or in a flattened state. The paperboard material can also contain odor-neutralizing chemicals to reduce and manage the odor from the soiled materials. The opening to the unit is an elongated slot across the top of the unit with a flexible film in the center. The opening can be stretched open with the flexibility of the paperboard to insert the soiled materials.

FIG. **8**C is a cross sectional view of the invertible pod storage disposal unit as shown in the example embodiment of FIG. **8**B. Specifically, the individual compartments **861***c*-**1** through **861***c*-**8** are used to receive soiled personal hygiene products via an entry point in a cover as illustrated and described in connection with FIG. **8**A.

An alternative example embodiment includes an external view of this embodiment showing a dial that is turned to progress the soiled material into the storage chamber. The dial mechanism can be of many shapes, sizes and with many different kinds of features improving the ability to turn the wheel.

Alternative example embodiments of the present invention include a compartment or component area of the unit that includes a small suction device, such as a vacuum or compressor that activates upon closure of the top portion of the unit. For example, some such example embodiments enable a user to place the used personal care product into the receptacle, and, upon closure of a top portion door or drawer, a small suction occurs to remove possible upward odor release. Some such example embodiments may include a filter layer, such as an air filter, trap, etc. that may further enable odor removal and (trapping). This may also house a liquid odor neutralizing solution that sprays on the internal area to prevent any odor build up or head space wafting upon opening. This should also help prevent the unit from absorbing any odors, a common problem in current plastic material containers.

Alternative example embodiments of the present invention include a storage compartment that may be connected to and separated from the waste disposal apparatus such that personal care products may be discretely placed and stored in the same container, or additional compartment of the container.

Example embodiments as presented herein may be composed of many types of materials, for example: Manmade fiber materials both woven and non-woven (e.g., air laid, hydro entangled, chemical-bond, etc.). Manmade materials

such as polymers and plastic resin like Acrylonitrile butadiene styrene (ABS), Low Density Polyethylene (LDPE), Linear Low Density Polyethylene (LLDPE), Styrene, Polyethylene and Polypropylene. Biodegradable polymers such as PolyLactic acid (PLA), 3-hydroxypropionic acid P(3-HP), and similar materials. Natural fibers such as paperboard, layered paperboard and bamboo (virgin and recycled). Hydrophobic coatings that prevent moisture leakage. Manmade and Natural anti-bacterial and anti-microbial agents to prevent bacterial growth (coating and additive) and/or unique attachment methodology such as Nano Technology.

Alternative example embodiments of the present invention include a product or component that neutralizes odor. For example, the container may be lined with or combined with an air freshener that may neutralize the inside of the container. Other such odor protectants may be used, for example, at least one of a non-toxic, non-allergenic, biodegradable, fragrance-free product added onto the surface of the unit, integrated with the unit material, coated on at least a portion of the unit, or similar manners. The unit should have multiple layers of protection with an antibacterial and anti-microbial pail, a moisture barrier between the pail and disposable and a deodorizer/neutralizer in the top of the disposable. Alternative example embodiments of the present invention include a natural and/or artificial material for absorbing odor, such as charcoal or a replaceable odor eliminator can be included therein.

Alternative example embodiments of the present invention further include an odor neutralizing liquid formulation spray is used to treat portions of the container in order to manage odor. The treatment can be automatic upon opening or closing of the container. The treatment can further be manually activated by a user when odor increases to the user's dislike. The treatment can further be time based or weight based and released to manage odor that is developed over time. The spray material can be recharged by removing an empty container with the formulation and replacing it with a full container. Further example embodiments of the present invention include a lining or bag within the receptacle, which contains or is coated with an odor neutralizer. Further example embodiments can include an odor neutralizing substance coated on internal and/or external surfaces of the receptacle.

Alternative example embodiments of the present invention can include a personal code to be entered or enabled on the receptacle in order for the receptacle to open, such as a battery operated, mechanical, or electrically operated receptacle. Such a code-type mechanism could be a hand entered code or change of physical items on the receptacle, a primitive lock. Other such example embodiments could include multiple components where a code or lock is required before the disposal area of the receptacle is. For example, a used adult care product enters a receiving mechanism in the receptacle and is placed into a storing mechanism of the receptacle that is separated and/or distinct from the receiving mechanism. In order for a user to view or dispose of the used contents, a code or lock would be entered/used to reach this portion of the receptacle. Alternative example embodiments of the present invention may include a concealed compartment, such as a rear-hidden compartment or a locked compartment that provides for further discretion and privacy such that the soiled products cannot easily be seen by a component mistakenly opened or poorly closed/sealed.

Alternative example embodiments of the present invention can be configured based on the concepts surrounding the "Lotus Effect" regarding the field of "super-hydrophobicity," which is a scientific property of materials able to maintain bacteria free surfaces. External and/or internal surfaces of an example embodiment of the present invention can be used based on this property and can be "self-cleaning surfaces" such that contamination, bacteria, odor, etc. can be easily removed as substances will not "stick" to the material. Common equations and scientific models in the field of super-hydrophobicity include Wenzel's Model and Cassie's Model. In other words, some such example embodiments of the present invention could mimic the natural effects of Lotus leaves and the surfaces of the present invention could be able to repel microbial through the texture or finish.

Further embodiments can be envisioned to one of ordinary skill in the art after reading this disclosure. In other embodiments, combinations or sub-combinations of the above-disclosed example embodiments can be advantageously made. The example arrangements of components are shown for purposes of illustration and it should be understood that combinations, additions, re-arrangements, and the like are contemplated in alternative embodiments of the present invention. Thus, while the example embodiments have been described with respect to exemplary embodiments, one skilled in the art will recognize that numerous modifications are possible. It will, however, be evident that various modifications and changes may be made thereunto without departing from the broader spirit and scope of the invention as set forth in the claims and that the invention is intended to cover all modifications and equivalents within the scope of the following claims.

What is claimed is:

1. A waste disposal apparatus configured to receive bodily waste products, the waste disposal apparatus comprising:

a housing compartment to be operably connected with a waste containment compartment;

an attachment component to interlock with the waste containment compartment; and

an opening in the housing compartment, the opening leading to at least two mechanisms, comprising at least a first movable mechanism and a second movable mechanism, wherein the first movable mechanism, when engaged by a user, is moved to an open position and is configured to engage the second movable mechanism to an open position, wherein the first movable mechanism and the second movable mechanism return to a closed position when the first movable mechanism is no longer engaged by the user, and wherein the second movable mechanism is operably connected with a sealing mechanism, wherein when the first movable mechanism is in the closed position, the sealing mechanism is activated and seals the second movable mechanism.

2. The waste disposal apparatus according to claim **1**, wherein the waste containment compartment is wholly removable from the housing compartment and further comprising:

a movable lid to expose an opening in the waste containment compartment; and

a second attachment component to interlock with the housing compartment, wherein the second attachment component includes a hinge configured to be folded to seal the opening to the waste containment compartment.

3. The waste disposal apparatus of claim **1**, wherein a housing receptacle and the opening to the waste containment compartment are sizeable to receive bodily waste products.

4. A waste disposal apparatus having an opening for receiving waste products, the waste disposal apparatus comprising:

a housing receptacle having an opening to a containment space, the containment space being concealed/enclosed on all sides except for the opening;

a cover for the opening that is operably connected to the housing, the cover being a movable component for movement in a vertical or horizontal position;

a shifting mechanism operably associated with the cover, the shifting mechanism configured to index one position in one direction when the cover is closed; and

an inner compartment for holding a disposable liner, the inner compartment being accessible when the cover is in an open position, wherein the disposable liner is a belt mechanism containing depressed compartments for receiving the waste products and wherein the belt mechanism is fully replaceable without having to remove the inner compartment.

5. The apparatus according to claim **4**, wherein the disposable liner includes expandable compartments that expand from a closed position upon entry of an object.

6. The apparatus according to claim **4**, wherein the disposable liner being associated with the shifting mechanism, in a manner that enables the disposable liner to receive waste product each time and the shifting mechanism rotates one position.

7. The apparatus according to claim **4**, wherein the cover for the opening is operable by a sensor.

8. The waste disposal apparatus of claim **4**, wherein the housing receptacle includes an external mechanism for attaching to an object.

9. The waste disposal apparatus of claim **4**, wherein the cover is a rotating cover, such that the shifting mechanism shifts in a circular motion in order to reveal a next position.

10. The waste disposal apparatus of claim **4**, further comprising a second housing receptacle operably attachable to a side or bottom of the housing receptacle and is configured to include an unused compartment for storing clean components.

11. The waste disposal apparatus of claim **4**, wherein a second housing receptacle is a storable component configured to attach to additional components operably.

12. A waste disposal apparatus having an opening for receiving waste products, the waste disposal apparatus comprising:

a housing receptacle having an opening to a containment space, the containment space being concealed/enclosed on all sides except for the opening;

a cover for the opening that is operably connected to the housing, the cover being a movable component for movement in a vertical or horizontal position;

a shifting mechanism operably associated with the cover, the shifting mechanism configured to index one position in one direction when the cover is closed; and

an inner compartment for holding a disposable liner, the inner compartment being accessible when the cover is in an open position a sealing flap operably connected with the cover, the sealing flap providing for waste containment, the sealing flap being movable for disposal with the disposable liner.

13. A waste disposal apparatus having an opening for receiving waste products, the waste disposal apparatus comprising:

a housing receptacle having an opening to a containment space, the containment space being concealed/enclosed on all sides except for the opening;

a cover for the opening that is operably connected to the housing, the cover being a movable component for movement in a vertical or horizontal position;

a shifting mechanism operably associated with the cover, the shifting mechanism configured to index one position in one direction when the cover is closed; and

an inner compartment for holding a disposable liner, the inner compartment being accessible when the cover is in an open position, wherein the shifting mechanism is configured to stop shifting when the disposable liner is full.

14. A waste disposal apparatus having an opening for receiving waste products, the waste disposal apparatus comprising:

a housing receptacle having an opening to a containment space, the containment space being concealed/enclosed on all sides except for the opening, wherein the housing receptacle is interconnected with a hanging mechanism adjustable to be placed over any number of objects;

a cover for the opening that is operably connected to the housing, the cover being a movable component for movement in a vertical or horizontal position;

a shifting mechanism operably associated with the cover, the shifting mechanism configured to index one position in one direction when the cover is closed; and

an inner compartment for holding a disposable liner, the inner compartment being accessible when the cover is in an open position.

15. A waste disposal apparatus configured to receive a personal hygiene waste product, the waste disposal apparatus comprising:

a first containment component, the first containment component including a cover configured to open in a vertical or horizontal direction upon engagement with an opening mechanism operably interconnected with the first containment component by a hinge component;

a second containment component configured to be contained in the first containment component, the second containment component being a disposable containment compartment interconnected with a disposable opening collar configured to interlock with a removable covering mechanism temporarily;

a first engagement mechanism connected with the removable covering mechanism, the first engagement mechanism being engaged by a personal hygiene product being placed within the disposable opening;

a second engagement mechanism connected with the second containment component, the second engagement mechanism configured to be contained in the first engagement mechanism and the second engagement mechanism being engaged by movement of the first engagement mechanism; and

the first and second engagement mechanisms configured to disengage automatically upon closure of the cover.

16. The waste disposal apparatus of claim **15** wherein a second disposable containment compartment component including an expandable bag configured to receive a personal hygiene product, wherein the second engagement mechanism includes a cover that covers a top of the expandable bag in a manner concealing contents of the expandable bag.

17. The waste disposal apparatus of claim **16** wherein the first engagement mechanism covers the cover of the second engagement mechanism in a manner concealing the second engagement mechanism.

* * * * *