Trials@uspto.gov
571-272-7822

Paper 44
Entered: May 16, 2025

UNITED STATES PATENT AND TRADEMARK OFFICE

BEFORE THE PATENT TRIAL AND APPEAL BOARD

GOOGLE LLC,
Petitioner,

v.

SECURITY FIRST INNOVATIONS, LLC,
Patent Owner.

IPR2024-00214
Patent 11,068,609 B2

Before THOMAS L. GIANNETTI, JASON M. REPKO, and STEPHEN E. BELISLE, *Administrative Patent Judges*.

BELISLE, *Administrative Patent Judge*.

JUDGMENT
Final Written Decision
Determining All Challenged Claims Unpatentable
35 U.S.C. § 318(a)

I. INTRODUCTION

Google LLC ("Petitioner") filed a Petition (Paper 2, "Pet.") requesting an *inter partes* review of claims 1–10 ("Challenged Claims") of U.S. Patent No. 11,068,609 B2 (Ex. 1001, "the '609 patent"). Security First Innovations, LLC ("Patent Owner") filed a Preliminary Response. Paper 10 ("Prelim. Resp."). We instituted an *inter partes* review of claims 1–10 of the '609 patent on all grounds of unpatentability alleged in the Petition. Paper 16 ("Institution Decision" or "Dec.").

After institution, Patent Owner filed a Response. Paper 22 ("PO Resp."). Petitioner filed a Reply. Paper 25 ("Pet. Reply"). Patent Owner filed a Sur-reply. Paper 33 ("PO Sur-reply"). We held an oral hearing in this case on February 27, 2025, and a transcript of the hearing is included in the record. Paper 43 ("Tr.").

We have jurisdiction under 35 U.S.C. § 6 (2024). Under the applicable evidentiary standard, Petitioner has the burden to prove unpatentability by a preponderance of the evidence. *See* 35 U.S.C. § 316(e); 37 C.F.R. § 42.1(d) (2023). "Preponderance of the evidence means the greater weight of evidence, evidence which is more convincing than the evidence which is offered in opposition to it." *United States v. C.H. Robinson Co.*, 760 F.3d 1376, 1383 (Fed. Cir. 2014) (internal quotations omitted). This Final Written Decision is issued pursuant to 35 U.S.C. § 318(a) and 37 C.F.R. § 42.73.

For the reasons discussed below, we determine Petitioner has established by a preponderance of the evidence that claims 1–10 of the '609 patent are unpatentable.

II. BACKGROUND

A. Real Parties in Interest

Petitioner and Patent Owner each identifies itself as a real party in interest. Pet. ix; Paper 4, 1. Petitioner also states: "Google LLC is a subsidiary of XXVI Holdings Inc., which is a subsidiary of Alphabet Inc. XXVI Holdings Inc. and Alphabet Inc. are not real parties-in-interest to this proceeding." Pet. ix n.1.

B. Related Matters

According to the parties, the '609 patent has been asserted in *Security First Innovations, LLC v. Google LLC*, No. 2:23-cv-00097 (E.D. Va.) (Norfolk Division) (transferred from Alexandria Division, 1:23-cv-00329) ("District Court Case"). Pet. x; Paper 4, 1; Paper 7, 1.

The parties also indicate that IPR2024-00212 (U.S. Patent No. 11,178,116), IPR2024-00213 (U.S. Patent No. 9,338,140); and IPR2024-00215 (U.S. Patent No. 10,452,854) are related administrative matters. Paper 7, 1; Paper 4, 1. Petitioner advises the Board that, on January 22, 2024, the Eastern District of Virginia entered an Order (ECF No. 313) staying the District Court Case pending resolution of this case and the above-listed *inter partes* reviews. Paper 7, 1.

Petitioner also identifies all of the related applications listed on the face of the '609 patent as related matters, along with U.S. Patent Application No. 17/347,268, filed June 14, 2021. Pet. ix–x; *see* Ex. 1001, codes (60), (63).

C. The '609 Patent

The '609 patent is titled "Secure Data Parser Method and System," and issued on July 20, 2021, from U.S. Application No. 16/658,506, filed

October 21, 2019. Ex. 1001, codes (10), (21), (22), (45), (54). The '609 patent claims priority through a series of continuation applications to U.S. Provisional Application No. 60/738,231, filed November 18, 2005. *Id.* at codes (60), (63). We note that the immediate parent of the '609 patent, namely Application No. 16/127,077, filed September 10, 2018, now U.S. Patent No. 10,452,854 B2, is the subject of IPR2024-00215, in which the Board has instituted *inter partes* review.

The '609 patent relates generally to securing data from unauthorized access or use. Ex. 1001, 1:26–27. The data to be secured is parsed, split, or separated into two or more parts or portions. *Id.* at 2:47–49. The data is encrypted either before or after the parsing, splitting, or separating. *Id.* at 2:49–52. The encryption step may be repeated for one or more portions of the data. *Id.* at 2:52–54.

In one embodiment, the '609 patent describes a fault-tolerant scheme for "disaster recovery." Ex. 1001, 70:12–25. This scheme allows the original data to be regenerated from "fewer than all portions of the separated data generated by the secure data parser." *Id.* at 70:14–16. For example, the data may be divided into four portions and stored in four different locations. *Id.* at 70:20–22. To successfully recreate the original data, the fault-tolerant scheme may need only two of the four portions. *Id.* at 70:20–26. This is beneficial if the data at two locations is corrupted, lost, or otherwise compromised. *Id.* Also, the fault-tolerant feature may be used to implement the "two-man rule," in which two entities need to put their portions together to retrieve the original data. *Id.* at 70:27–34.

D. Illustrative Claim

The '609 patent includes ten claims, all of which are challenged.[1] Claim 1 is the sole independent claim, and is reproduced below with labels, such as "[1A]," added to limitations in the same manner as used by the parties.

1. [PRE] A method for securing data, the method comprising:

[1A] executing code by a processor to perform:

[1B] receiving a first key from a storage system;

[1C1] generating a plurality of data chunks based on a data set, wherein each data chunk of the plurality of data chunks comprises less than an entirety of data of the data set, and [1C2] wherein the data set can be reconstructed using at least a minimum number of the plurality of chunks;

[1D] encrypting each respective data chunk of the plurality of data chunks with a respective second key, wherein each of the respective second keys are distinct from each other;

[1E] performing a cryptographic operation based on the first key to further secure the plurality of data chunks; and

[1F] storing, in a memory coupled to the processor, at least one data chunk of the plurality of data chunks with data indicative of at least one of the distinct encryption keys on at least one storage device.

Ex. 1001, 83:12–30.

[1] A Certificate of Correction issued on November 22, 2022, concerning dependent claims 6–10 of the '609 patent. Ex. 1002, 11–16. In particular, the Certificate replaced the term "external" key in each of claims 6–10 with the term "first" key as recited in independent claim 1 (limitation [1B]). *Id.*

E. Evidence of Record

Petitioner relies on the following published patent application evidence.

Name	Patent Document	Exhibit
Orsini	U.S. Patent Appl. Pub. No. 2004/0049687 A1, published March 11, 2004	1005
Foster	U.S. Patent Appl. Pub. No. 2003/0200176 A1, published October 23, 2003	1006

Pet. 3.

Petitioner also relies upon the Declaration of Samrat Bhattacharjee, Ph.D. (Ex. 1003 ("Bhattacharjee I Decl.")) and the Reply Declaration of Samrat Bhattacharjee, Ph.D. (Ex. 1111 ("Bhattacharjee II Decl.")).

Patent Owner relies upon the Declaration of Aviel D. Rubin, Ph.D. (Ex. 2003 ("Rubin I Decl.")) and the Second Declaration of Aviel D. Rubin, Ph.D. (Ex. 2033 ("Rubin II Decl.")).

F. Petitioner's Reply Declaration (Bhattacharjee II Decl.)

Patent Owner argues that Petitioner submitted "a 136-page, 26,940-word Reply declaration and 44 new exhibits to attempt to fill the Petition's numerous holes." PO Sur-reply 1 (emphases omitted). Patent Owner argues that "[t]his new evidence, in support of new arguments, should not be considered." *Id.* Patent Owner argues that "[t]he reply-declaration and the new exhibits are improperly incorporated by reference and should be disregarded," and "[t]he Reply does not meaningfully discuss hardly any of the reply-declaration's 239 paragraphs." *Id.* at 1–2. We agree with Patent Owner that the length of Dr. Bhattacharjee's 136-page Reply Declaration is excessive. However, we are not persuaded to wholly disregard the declaration, especially in view of the fact that our rules place no page limit

on declarations and Petitioner has not placed before us a motion to strike the declaration. We consider also the fact that Patent Owner itself submitted a total of about 145 pages of declaration testimony by Dr. Rubin. *See* Exs. 2003, 2033.

On the other hand, our rules do prohibit incorporating documents by reference. *See* 37 C.F.R. § 42.6(a)(3). Our PTAB Consolidated Trial Practice Guide (Nov. 2019) ("Trial Practice Guide" or "CTPG")[2] provides guidance on incorporation by reference: "[P]arties that incorporate expert testimony by reference in their petitions, motions, or replies without providing explanation of such testimony risk having the testimony not considered by the Board." *Id.* at 35–36. The Trial Practice Guide further explains: "Expert testimony may be presented to establish the scope and content of the prior art for determining obviousness and anticipation. . . . Expert testimony, however, cannot take the place of a disclosure in a prior art reference, when that disclosure is required as part of the unpatentability analysis." *Id.* at 36.

Consistent with this guidance, we will focus our analysis on arguments presented in the briefing of the parties and their support. We will not address arguments in either party's declarations that are not discussed in the briefs or arguments that are incorporated by reference from the expert declarations. Nor will we give weight to expert testimony that attempts to fill gaps in the prior art presented in the Petition with new evidence. *See* CTPG at 74–75.

[2] Available at https://www.uspto.gov/TrialPracticeGuideConsolidated.

G. Asserted Challenges to Patentability

We instituted *inter partes* review of claims 1–10 of the '609 patent on the following grounds asserted by Petitioner. Dec. 2, 52; Pet. 3.

Claim(s) Challenged	35 U.S.C. §	Reference(s)/Basis
1–10	102[3]	Orsini
1–10	103	Orsini
1–3, 7, 8	102	Foster
1–10	103	Foster

III. PATENTABILITY

A. Applicable Law

Petitioner challenges the patentability of claims 1–10 of the '609 patent on grounds that the claims are anticipated under 35 U.S.C. § 102 or would have been obvious under 35 U.S.C. § 103 in light of two separate references, namely Orsini and Foster. "In an [*inter partes* review], the petitioner has the burden from the onset to show *with particularity* why the patent it challenges is unpatentable." *Harmonic Inc. v. Avid Tech., Inc.*, 815 F.3d 1356, 1363 (Fed. Cir. 2016) (citing 35 U.S.C. § 312(a)(3) (requiring *inter partes* review petitions to identify "with particularity . . . the evidence that supports the grounds for the challenge to each claim")) (emphasis added). This burden never shifts to Patent Owner. *See Dynamic Drinkware, LLC v. Nat'l Graphics, Inc.*, 800 F.3d 1375, 1378 (Fed. Cir. 2015).

[3] The Leahy-Smith America Invents Act ("AIA"), Pub. L. No. 112-29, 125 Stat. 284, 287–88 (2011), amended 35 U.S.C. §§ 102 and 103. Because the '609 patent was filed before March 16, 2013, the effective date of the relevant amendment, the pre-AIA versions of §§ 102/103 apply.

1. Anticipation

To serve as an anticipatory reference under 35 U.S.C. § 102, "the reference must disclose each and every element of the claimed invention, whether it does so explicitly or inherently." *In re Gleave*, 560 F.3d 1331, 1334 (Fed. Cir. 2009). "The identical invention must be shown in as complete detail *as is contained in the . . . claim*." *Richardson v. Suzuki Motor Co.*, 868 F.2d 1226, 1236 (Fed. Cir. 1989) (emphasis added). The elements must be arranged as required by the claim, "but this is not an '*ipsissimis verbis*' test," i.e., identity of terminology is not required. *In re Bond*, 910 F.2d 831, 832–33 (Fed. Cir. 1990) (citing *Akzo N.V. v. United States Int'l Trade Comm'n*, 808 F.2d 1471, 1479 & n.11 (Fed. Cir. 1986)).

2. Obviousness

A claim is unpatentable under 35 U.S.C. § 103 if "the differences between the subject matter sought to be patented and the prior art are such that the subject matter as a whole would have been obvious at the time the invention was made to a person having ordinary skill in the art to which said subject matter pertains." *KSR Int'l Co. v. Teleflex Inc.*, 550 U.S. 398, 406 (2007). The question of obviousness is resolved on the basis of underlying factual determinations, including (1) the scope and content of the prior art; (2) any differences between the claimed subject matter and the prior art; (3) the level of skill in the art; and (4) when of record, objective evidence of obviousness or non-obviousness, i.e., secondary considerations. *Graham v. John Deere Co.*, 383 U.S. 1, 17–18 (1966). Secondary considerations may include the following: "commercial success, long felt but unsolved needs,

failure of others, etc."[4] *Id.* The totality of the evidence submitted may show that the challenged claims would not have been obvious to one of ordinary skill in the art. *In re Piasecki*, 745 F.2d 1468, 1471–72 (Fed. Cir. 1984). When evaluating a combination of teachings, we must also "determine whether there was an apparent reason to combine the known elements in the fashion claimed by the patent at issue." *KSR*, 550 U.S. at 418 (citing *In re Kahn*, 441 F.3d 977, 988 (Fed. Cir. 2006)).

The Supreme Court has made clear that we apply "an expansive and flexible approach" to the question of obviousness. *KSR*, 550 U.S. at 415. Whether a patent claiming a combination of prior art elements would have been obvious is determined by whether the improvement is more than the predictable use of prior art elements according to their established functions. *Id.* at 417. To reach this conclusion, however, requires more than a mere showing that the prior art includes separate references covering each separate limitation in a claim under examination. *Unigene Labs., Inc. v. Apotex, Inc.*, 655 F.3d 1352, 1360 (Fed. Cir. 2011). Rather, obviousness requires the additional showing that a person of ordinary skill at the time of the invention would have selected and combined those prior art elements in the normal course of research and development to yield the claimed invention. *Id.* "To satisfy its burden of proving obviousness, a petitioner cannot employ mere conclusory statements. The petitioner must instead articulate specific reasoning, based on evidence of record, to support the legal conclusion of obviousness." *In re Magnum Oil Tools Int'l, Ltd.*, 829 F.3d 1364, 1380 (Fed. Cir. 2016).

---

[4] Patent Owner does not present objective evidence of non-obviousness.

We analyze the challenges presented in the Petition in accordance with the above-stated principles.

B. Level of Ordinary Skill in the Art

Petitioner contends that a person of ordinary skill in the art, at the time of the invention of the '609 patent, "would have had at least a bachelor's degree in computer science, computer engineering, or a related field, with three years of experience in the area of securing data from unauthorized access or use," and that "[a] higher level of education may substitute for less experience." Pet. 5 (citing Ex. 1003 ¶¶ 37–38).

Patent Owner does not present an alternative definition in this proceeding. *See generally* PO Resp.

In determining the level of ordinary skill in the art, various factors may be considered, including the "type of problems encountered in the art; prior art solutions to those problems; rapidity with which innovations are made; sophistication of the technology; and educational level of active workers in the field." *In re GPAC Inc.*, 57 F.3d 1573, 1579 (Fed. Cir. 1995). The level of ordinary skill in the art also may be reflected by the prior art of record. *See Okajima v. Bourdeau*, 261 F.3d 1350, 1355 (Fed. Cir. 2001).

Neither party argues that the outcome of this case would differ based on our adoption of any particular definition of the level of ordinary skill in the art. Considering the subject matter of the '609 patent, the background technical field, the prior art, and Petitioner's proposed and unopposed definition of the skilled artisan, we apply the level of skill set forth above, which is consistent with the testimony of Dr. Bhattacharjee (Ex. 1003 ¶¶ 37–38).

C. Claim Construction

We construe claims "using the same claim construction standard that would be used to construe the claim in a civil action under 35 U.S.C. 282(b), including construing the claim in accordance with the ordinary and customary meaning of such claim as understood by one of ordinary skill in the art and the prosecution history pertaining to the patent." 37 C.F.R. § 42.100(b); *see also Phillips v. AWH Corp.*, 415 F.3d 1303 (Fed. Cir. 2005) (en banc).

In this context, claim terms "are generally given their ordinary and customary meaning" as understood by a person of ordinary skill in the art in question at the time of the invention. *Phillips*, 415 F.3d at 1312–13; *see CCS Fitness, Inc. v. Brunswick Corp.*, 288 F.3d 1359, 1366 (Fed. Cir. 2002) (There is "a 'heavy presumption' that a claim term carries its ordinary and customary meaning."). "In determining the meaning of the disputed claim limitation, we look principally to the intrinsic evidence of record, examining the claim language itself, the written description, and the prosecution history, if in evidence." *DePuy Spine, Inc. v. Medtronic Sofamor Danek, Inc.*, 469 F.3d 1005, 1014 (Fed. Cir. 2006) (citing *Phillips*, 415 F.3d at 1312–17). Extrinsic evidence is "less significant than the intrinsic record in determining 'the legally operative meaning of claim language.'" *Phillips*, 415 F.3d at 1317.

"The Board is required to construe 'only those terms . . . that are in controversy, and only to the extent necessary to resolve the controversy.'" *Realtime Data, LLC v. Iancu*, 912 F.3d 1368, 1375 (Fed. Cir. 2019) (citing *Vivid Techs., Inc. v. Am. Sci. & Eng'g, Inc.*, 200 F.3d 795, 803 (Fed. Cir. 1999)).

In our Institution Decision, we preliminarily construed (1) the order of steps in claim 1 such that "the first key may be received before or after the data chunks are generated" (Dec. 14–16); and (2) the limitation "the data set can be reconstructed using at least a minimum number of the plurality of chunks," as recited in claim 1, to encompass reconstructing the data set from all data chunks, but the claim is not limited to "a predefined number" of data chunks or reconstructing the data set with fewer than all chunks (Dec. 16–18). We also provided guidance on the term "storage devices" as recited in claim 1. Dec. 18–19 (commenting that we did not see support for limiting the term "storage devices" to "long-term storage"). None of these constructions are at issue post-institution.

Neither party explicitly proposed constructions during trial, and we do not see the need for construing any terms in this Decision. Thus, we give the claim terms their plain meaning. *See Phillips*, 415 F.3d at 1313–14.

D. Anticipation or Obviousness of Claims 1–3, 7, and 8 by or over Foster

Petitioner contends claims 1–3, 7, and 8 are unpatentable under 35 U.S.C. § 102 as anticipated by Foster (Ex. 1006), or, alternatively, under 35 U.S.C. § 103 as obvious over Foster. Pet. 3, 56–79, 83–84; Pet. Reply 1–18. Patent Owner opposes Petitioner's contentions. PO Resp. 32–56; PO Sur-reply 2–21. For the reasons expressed below, and based on the complete record before us, we determine that Petitioner has demonstrated by a preponderance of the evidence that claims 1–3, 7, and 8 are unpatentable as obvious over Foster. *See Arendi S.A.R.L. v. Apple Inc.*, 832 F.3d 1355, 1361 (Fed. Cir. 2016) ("[A] patent can be obvious in light of a single prior art reference if it would have been obvious to modify that

reference to arrive at the patented invention."); *Therasense, Inc. v. Becton, Dickinson & Co.*, 593 F.3d 1325, 1336–37 (Fed. Cir. 2010) (affirming an invalidity judgment where claims were held obvious over a single reference). We turn first to an overview of Foster.

1. Overview of Foster (Ex. 1006)

Foster generally is directed to "a method, system and program product for attaching a title key to encrypted content for synchronized transmission to a recipient," where "a title key used to encrypt content is itself encrypted, and attached to the encrypted content so that both can be synchronously transmitted to a recipient." Ex. 1006 ¶ 2.

Foster's Figure 8, as annotated by Petitioner, is reproduced below. Pet. 57 (citing Ex. 1003 ¶ 167).

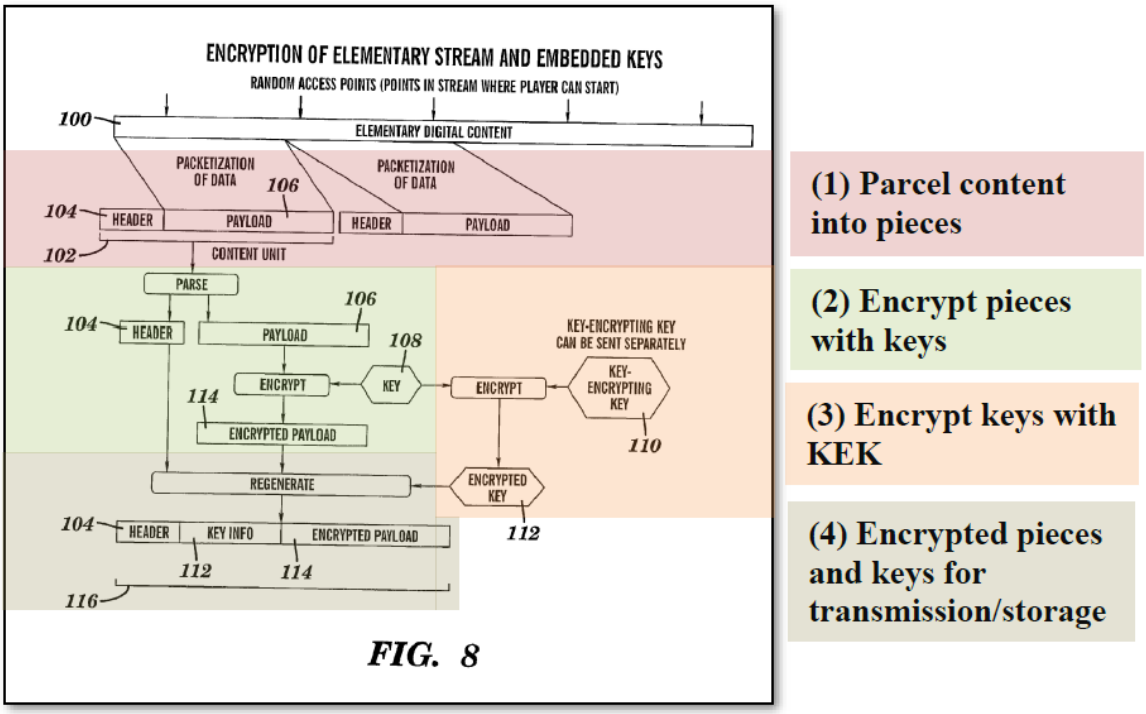

Figure 8, shown annotated by Petitioner, depicts a flow diagram of an elementary content stream being processed according to Foster's invention.

Ex. 1006 ¶ 22, Fig. 8; Pet. 57.

Petitioner annotates Figure 8 with labels on four different parts of Foster's method: (1) parceling elementary digital content 100 into content units 102 containing header 104 and payload 106, (2) encrypting payload 106 with key 108, (3) encrypting key 108 with a key-encrypting key (KEK) 110 to create encrypted key 112, and (4) using encrypted key 112 to regenerate header 104, key info 112, and encrypted payload 114 as processed content unit 116, which can be transmitted to and stored by a recipient. Pet. 57–58; *see* Ex. 1006 ¶ 64.

Foster's Figure 16, as annotated by Petitioner, is reproduced below. Pet. 58–59 (citing Ex. 1003 ¶¶ 172–173).

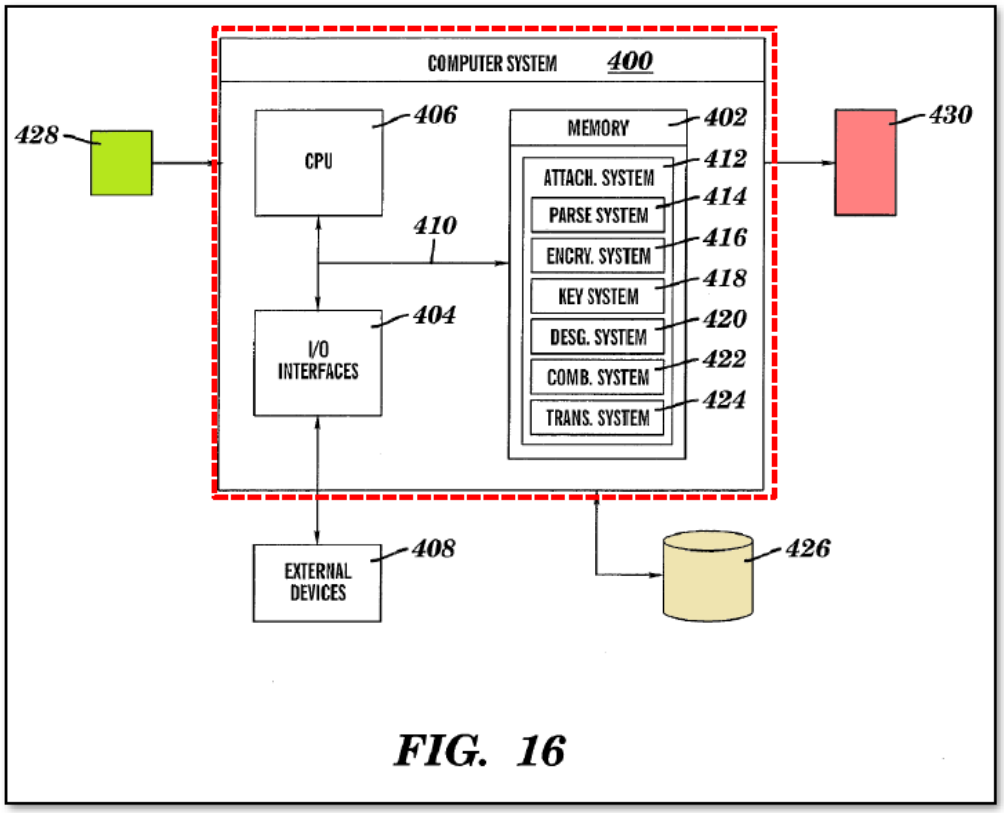

Figure 16, shown annotated by Petitioner, depicts a computer system having an attachment system.

Ex. 1006 ¶ 30, Fig. 16.

Petitioner annotates Figure 16 with color-coding to highlight source 428; computer system 400, which comprises memory 402, input/output (I/O) interfaces 404, and central processing unit (CPU) 406; database 426; and recipient 430. Ex. 1006 ¶¶ 75–78; Pet. 58–59. Stored in memory 402 is attachment system 412, which includes parsing system 414, encryption system 416, key system 418, designation system 420, combination system 422 and transmission system 424. Ex. 1006 ¶ 78. Memory 402 may comprise any known type of data storage and/or transmission media, including magnetic media, optical media, random access memory (RAM), read-only memory (ROM), a data cache, or a data object. *Id.* ¶ 75.

Foster explains that its computer system 400 acts as a processing intermediary between source 428 and recipient 430:

> It should be understood that computer system 400 is intended to be representative of any system capable of processing content units of an elementary content stream received from source 428, and transmitting the processed content units to a recipient 430.

Ex. 1006 ¶ 78.

We further discuss below the disclosures of Foster in connection with the parties' arguments.

2. Independent Claim 1

The parties dispute whether Foster discloses to the skilled artisan three limitations of the Challenged Claims, namely (1) "generating a plurality of *data chunks* based on a data set" (limitation 1C1); (2) "*executing code* by a processor *to perform* . . . *storing* . . . at least one data chunk . . . on at least one storage device" (limitation 1F); and (3) "storing, in a memory *coupled to*

the processor, at least one data chunk" (limitation 1F). Pet. 56–79, 83–84; PO Resp. 32–56; Pet. Reply 1–18; PO Sur-reply 2–21; Ex. 1001, 83:12–30. We address these disputes *seriatim*.

a) Data Chunks

Claim 1 recites, in part, "generating a plurality of *data chunks* based on a *data set*, wherein each data chunk of the plurality of data chunks comprises less than an entirety of data of the data set, and wherein the data set can be reconstructed using at least a minimum number of the plurality of chunks." Ex. 1001, 83:15–20 (Limitations 1C1 and 1C2).

Initially, we note that Petitioner's challenge is based on the parties' proposed district court constructions for "data set." *See* Pet. 65–66. But neither party proposes a construction for "data chunks" in this proceeding. Notably, the 83-column Specification of the '609 patent itself does not use the term "data chunks." Even so, the meaning of "data chunks" is readily apparent from the plain language: the data chunks are generated "based on a data set," and the claim defines the steps that comprise the chunk generation, including the relationship between the chunks and the data set. *See* Ex. 1001, 83:15–30; *In re Hiniker Co.*, 150 F.3d 1362, 1369 (Fed. Cir. 1998) (In all aspects of claim construction, "the name of the game is the claim." (quoting Giles Sutherland Rich, *Extent of Protection and Interpretation of Claims–American Perspectives*, 21 Int'l Rev. Indus. Prop. & Copyright L. 497, 499 (1990))).

Patent Owner argues Petitioner "fails to show that Foster's packet payloads are 'data chunks.'" PO Resp. 34–35 (citing Pet. 65–66; Ex. 2033 ¶ 97). Patent Owner argues the Board should reject the Foster

ground because allegedly Petitioner's reasoning about the claimed data chunks is "conclusory." *Id.* at 37. We disagree.

Petitioner sufficiently explains that Foster teaches a data set:

> Foster's digital content is a "*data set*" under both parties' constructions because [the skilled artisan] understood that the digital content (*e.g.*, a video+audio data file) is a "collection of related information made up of separate elements [e.g., video frames and audio samples] that can be treated as a unit [e.g., a file] in data handling" ([Petitioner]; [Ex. 1064, 9–10]) and "a collection of information for storage" ([Patent Owner]; [Ex. 1065, 6–7]). [Ex. 1006 ¶¶ 4, 8, 37 ("Content—any data such as digital image, sound or binary data deliverable from a source to a recipient."), 50, Fig. 8; Ex. 1003 ¶ 185].

Pet. 65–66. Petitioner also sufficiently explains why Foster's payloads (the "data chunks") satisfy the claimed relationship to the data set:

> As Foster's Figure 8 . . . illustrates, each **payload** ("***data chunk***") "*comprises less than an entirety of the data set*," as claimed, because Foster discloses that the entire stream ("*data set*") cannot be recovered from any one single payload.

Pet. 66 (citing Ex. 1006 ¶ 71; Ex. 1003 ¶ 186). Petitioner shows that Foster's elementary content stream ("data set") can be reconstructed using at least a minimum number of the plurality of content packets ("data chunks") for at least the reason that Foster uses all the encrypted packets to reconstruct the entire stream. Pet. 67 (citing Ex. 1006 ¶ 71). In this way, Petitioner sufficiently explains why Foster's payloads are data chunks (Pet. 65–67), contrary to Patent Owner's argument (PO Resp. 34–37).

Patent Owner does not dispute that Foster's payloads are generated from and are a part of the content, as recited in claim 1. *See* PO Resp.; PO Sur-reply. Rather, Patent Owner argues for additional unrecited limitations to the term "data chunks." *See* PO Resp. 37–42. For instance, Patent Owner

argues that, in the '609 patent, "a packet payload is not a 'data chunk,' rather, it is something that may be divided into 'data chunks.'" *Id.* at 41–42; *see id.* at 37–42; PO Sur-reply 2–4.

We see no reason for imposing this additional limitation. The '609 patent explains that a "wide number of alternatives" for data splitting can be used and that there is no limit to the size of the splitting, for example. Ex. 1001, 21:9–37 (*cited in* Pet. Reply 4). In fact, any "suitable parsing and splitting approach may be used to generate portions of data from an original data set," including randomly splitting. *Id.* at 74:47–75:11; *see* Pet. Reply 15 (citing Ex. 1001, 74:56–75:10).

Like the '609 patent's discussion of splitting data, Dr. Rubin's testimony indicates that splitting is relevant—but the particular method for doing so is not. Specifically, Dr. Rubin testifies that "the share [or data chunk] is *the thing* that something gets split into" (Ex. 1099, 17:13–14) (emphasis added) and data chunks are "*pieces* that have been split off from the original data set" (*id.* at 158:17–19) (emphases added). We emphasize "the thing" and "pieces" here because those generic terms support our conclusion that a data chunk should not be defined by the type of information that is split (e.g., packets). In view of Dr. Rubin's testimony and the '609 patent, we decline to read into the claim the additional unrecited limitations that Patent Owner argues for. *See* PO Resp. 37–42.

Consistent with the '609 patent (*see, e.g.*, Ex. 1001, 21:9–37) and Dr. Rubin's testimony about data chunks (Ex. 1099, 17:13–14, 158:17–19), the Petition shows that Foster's encrypted payloads ("data chunks") are split off from the complete data set, as shown in Figure 8. *See* Pet. 65–68. In this way, Foster's encrypted payloads are generated "based on the data set." *See*

id. Under Petitioner's theory, Foster distributes the data set into a plurality of data chunks because payload 106 corresponds to the claimed "data chunks" (Pet. 66), which are related to the encrypted payload 114 (Pet. 69) as claimed. *See* Ex. 1001, 83:12–30.

Dr. Rubin presents a selection of technical articles that use the terms "packet" and "chunks," and from this, Patent Owner concludes that there is no reason to assume that Foster's packet payload is a data chunk. PO Resp. 37–38 (citing Ex. 2033 ¶ 98); PO Sur-reply 4. According to Dr. Rubin, numerous technical articles refer to a packet or packet payload as something that is divided into chunks. Ex. 2033 ¶ 98 (citing Ex. 2012, 3; Ex. 2013, 3; Ex. 2036, 1202; Ex. 2037, 1–2; Ex. 2038, 4–5; Ex. 2041, 7; Ex. 2042, 9; Ex. 2043, 9532). Patent Owner argues that "Petitioner fails to provide any evidence showing that an MPEG packet/payload or any other type of packet/payload is terminology used to refer to a share/chunk." PO Sur-reply 4.

Although Foster calls subsets of data "payloads" instead of "data chunks" (PO Sur-reply 4; Ex. 1006, Fig. 8), the prior art need not use the same words as the patentee. *See* Pet. Reply 5 (citing *Teva Pharm. Indus. Ltd. v. AstraZeneca Pharms. LP*, 661 F.3d 1378, 1384 (Fed. Cir. 2011)). As for Patent Owner's selection of technical articles, extrinsic evidence is "unlikely to result in a reliable interpretation of patent claim scope unless considered in the context of the intrinsic evidence." *Phillips*, 415 F.3d at 1318–19. Here, Patent Owner's extrinsic evidence is inconsistent with the specification because the '609 patent describes generating chunks from a wide variety of splitting and parsing techniques. *See* Ex. 1001, 21:9–37, 74:47–75:11. Thus, considering the context in which the '609 patent uses

the terms, we see no reason to limit claim 1 to a particular splitting technique, such as dividing the data set into packets and further dividing the packets into data chunks.

Patent Owner views Foster's reason for generating payloads as being significantly different from the invention's reason for generating the claimed data chunks. *See* PO Resp. 39–40. Dr. Rubin characterizes Foster's payloads as merely a by-product of the MPEG standard existing at that time. Ex. 2033 ¶¶ 100–102. Patent Owner argues that, unlike Foster's payloads, the claimed invention generates data chunks to secure the data. PO Resp. 39–40 (citing Ex. 2033 ¶ 100–102); PO Sur-reply 2–4.

We rejected a similar argument in our Institution Decision (*see* Dec. 27–29), and nothing in the record developed during trial indicates that we should depart from our reasoning in that decision. Foster emphasizes the importance of securing the data set through encryption of pieces—that is, the content packets. *See* Ex. 1006 ¶ 4 (explaining the invention's objective). Although packetization is part of the MPEG standard (PO Sur-reply 2–3), Foster's packetization has separate advantages when combined with encryption: "it is not necessary for the same title key to be used to encrypt each content packet" because a different, encrypted title key can be attached to each packet. Ex. 1006 ¶ 65 (*cited in* Pet. 69); *see also* Pet. Reply 5 (citing Ex. 1111 ¶ 49) (explaining how Foster's encryption works with the packet format). So, even assuming that the claim requires generating data chunks to secure the data, as Patent Owner argues (PO Resp. 39–40), Foster's stated goal is securing the digital content (Ex. 1006 ¶ 65), and the evidence supports Petitioner's argument that generating the encrypted payloads furthers that goal (Pet. 65–66, 68–69; Pet.

Reply 5). Thus, we credit the testimony of Petitioner's expert, Dr. Bhattacharjee, about securing the data (Ex. 1003 ¶¶ 194–195; Ex. 1111 ¶ 49) over that of Dr. Rubin on this issue (Ex. 2033 ¶¶ 100–102) because Dr. Bhattacharjee's testimony is more consistent with Foster's disclosure of securing the content by encrypting the payload (*see* Ex. 1006, Fig. 8, ¶¶ 4, 65).

Accordingly, we determine that Petitioner sufficiently evidences that Foster discloses, teaches, or at least fairly suggests the claimed "data set" and "data chunks" as recited in the limitation "generating a plurality of data chunks based on a data set, wherein each data chunk of the plurality of data chunks comprises less than an entirety of data of the data set, and wherein the data set can be reconstructed using at least a minimum number of the plurality of chunks."

b) Modifying Foster to Execute Code to Perform Storing Data Chunks on Storage Devices

Claim 1 recites, in part, "executing code by a processor to perform . . . storing . . . at least one data chunk . . . on at least one storage device." Ex. 1001, 83:12–30 (Limitations 1A and 1F).

Petitioner argues that the skilled artisan "had reason to store Foster's encrypted content in the memory of storage devices coupled to the processor (e.g., through a bus, direct wired/wireless connection, and/or a network-based connection)." Pet. 76. Petitioner explains:

> Foster's system 400 is (or can be part of) a content service provider ["CSP"].[5] As illustrated in Figure 16 (above

[5] Patent Owner argues "Foster's system is not a CSP" (PO Sur-reply 17), which we find unavailing and not commensurate with Petitioner's arguments for modifying Foster. Petitioner argues that Foster's system "is *(or can be*

> [§ III.D.1]), Foster's system 400 includes memory 402, which comprises "any known type of data storage," including "one or more types of data storage" or "distributed [storage] across a plurality of physical systems." [Ex. 1006 ¶ 75]. Thus, Foster's memory 402, which is coupled to CPU 406 via bus 410, includes storage devices. [Ex. 1003 ¶ 206].

Pet. 76–77. Petitioner argues that the skilled artisan "had reason to use one of the conventional storage devices coupled to Foster's processor to store data sets encrypted by Foster's processor," because doing so "would have beneficially allowed Foster's system to store copies of encrypted content for (1) backup, (2) video-on-demand [("VOD")] distribution, and/or (3) distribution to later-identified recipients (e.g., new subscribers), without having to repeat the encryption processing every time digital content (e.g., a movie) needed to be encrypted and delivered to recipients." Pet. 77 (citing Ex. 1003 ¶¶ 207–211); *see* Pet. Reply 2–3 (discussing conditional access systems in VOD systems), 11–12. Petitioner argues that "[s]toring encrypted content in memory coupled to Foster's processor on at least one storage device would have also been applying a known technique to solve the known problem of how to store encrypted content for delivery to multiple recipients at varying times, and thus was obvious." Pet. 77–78 (citing Ex. 1003 ¶ 212).

Patent Owner responds "Petitioner presents no argument as to how (or why) [the skilled artisan] would be motivated to modify CPU 406 to execute

---

part of)" a CSP. Pet. 76–77 (emphasis added). We find that Foster's disclosures support Petitioner's argument that Foster's system 400 may be considered a "content service provider," since it acts to provide the means through which content is received from a content owner (source) and transmitted to a consumer (recipient). *See* Ex. 1006 ¶¶ 39 (defining "Content Service Provider"), 78 (describing Foster's computer system 400).

code to store encrypted content units on these 'conventional storage devices.'" PO Resp. 47–48; PO Sur-reply 13–14 (arguing "the Petition does not address ***the processor*** executing code at all"). We find Patent Owner's argument unavailing on both counts. First, as to *how*, Petitioner's expert, Dr. Bhattacharjee, persuasively testifies that executing code to perform storing of encrypted data in storage devices was known to skilled artisans in the field. *See, e.g.*, Ex. 1003 ¶ 212 (*cited in* Pet. 77); Pet. Reply 11. Pragmatically, given that Foster discloses executing code in CPU 406 to perform all the aspects of its design, including encrypting data and accessing memory 402, external devices 408, and databases 426, we do not find it credible that the skilled artisan would not have known how to execute code in a processor to store data in a coupled storage device by the year 2005 (the earliest effective filing date of the '609 patent). *See* Pet. 62 (discussing Foster's Figure 16 and disclosure of executing program code on central processing unit (CPU) 406 to perform Foster's method); Ex. 1006 ¶¶ 12, 74–75; Pet. Reply 11–12 ("Foster's processor is already executing code to store data at storage devices *coupled to* it." (citing Ex. 1111 ¶¶ 81–87)); Ex. 1001, code (60). Second, as to *why*, and contrary to Patent Owner's "vague and conclusory" allegation (PO Resp. 47), Petitioner articulated three specific rational reasons in its Petition, as discussed above. *See* Pet. 77 (backup, video-on-demand distribution, and/or distribution to later-identified recipients); Ex. 1003 ¶¶ 207–211; Pet. Reply 11–12, 14–18.

Patent Owner argues that the skilled artisan "would recognize that the purported benefits Petitioner identifies vis-à-vis '(1) backup, (2) video-on-demand distribution, and/or (3) distribution to later-identified recipients,' are already solved by Foster's system because those benefits are provided by the

content owner." PO Resp. 52; *see id.* at 52–56. Patent Owner also argues "Petitioner's proposed modifications would either compromise the streamed content's security or require significant resources to prevent such a thing." *Id.* at 54; *see id.* at 54–55 (quoting Dr. Rubin, testifying that "[t]he entire premise of Foster's system is that it can receive content ***without*** storing it"). Notably, Dr. Rubin concedes that Petitioner's proposed modification of Foster would merely require "more" secure storage capacity: "[I]f Foster's system were modified to store pre-encrypted content, significantly more storage would have to be added and that additional storage would have to be as secure as the storage at the content provider/owner." Ex. 2033 ¶ 126.

Petitioner argues, and we agree, that "it does not need to show that there was a known problem with the prior art system in order to articulate the required rational underpinning for the proposed [modification]." *Unwired Planet, LLC v. Google Inc.*, 841 F.3d 995, 1002–03 (Fed. Cir. 2016) (*cited in* Pet. Reply 14–15). Petitioner persuasively explains:

> [C]ontent-owner storage would not negate benefits of content-service providers ("CSPs") storing Foster-encrypted content. [The skilled artisan] knew CSPs (e.g., cable-TV companies) often purchased/licensed content from content owners and then securely stored it before delivering to recipients. [Ex. 1099], 84-94. CSPs typically and beneficially encrypted and stored that content for repeated use (e.g., downloads by different customers) – rather than repeatedly encrypting it on-the-fly – and for backup purposes. Petition, 77-78 (citing EX1045, EX1050, EX1059-EX1060; [Ex. 1003], ¶¶206-213); [Ex. 1111], ¶¶102-114 (citing EX1073, [0043] (VOD "pre-encrypt[s]" and "stores the content"); EX1097, 2:31-53 ("real-time encryption [for VOD] poses much greater cost and space issues"); EX1075, 1:51-67; EX1105, [0034]-[0037]; EX1080, 2-7).

Pet. Reply 15; *see id.* at 16–17 ("EX1060, e.g., describes prior-art VOD systems where CSP intermediary 'servers . . . **store** all movies.'" (citing Ex. 1060 ¶¶ 7–8 (*cited in* Pet. 77)) (alteration in original)).

As for Patent Owner's allegation that Petitioner's proposed modification to Foster would "compromise" Foster's security, Petitioner argues, and we agree, that, "[b]eyond a conclusory expert declaration, [Patent Owner] offers no evidence that hacking risks or overall storage requirements would increase by storing content at a CSP/intermediary rather than a content owner." Pet. Reply 17. Petitioner also argues, and we agree, "even if it required 'increased cost and complexity' to make CSP storage more secure, that does 'not show that [the technique] was unknown or could not have practical applications,' and thus does not support non-obviousness." *Id.* at 17–18 (quoting *In re Cree*, 818 F.3d 694, 700–701 (Fed. Cir. 2016)); *id.* at 18 ("[I]t is a commonplace fact that design decisions entail making tradeoffs among multiple objectives." (quoting *Corephotonics, Ltd. v. Apple Inc.*, 2021 WL 4944471, at *6 (Fed. Cir. Oct. 25, 2021)); *see Allied Erecting and Dismantling Co. v. Genesis Attachments, LLC*, 825 F.3d 1373, 1381 (Fed. Cir. 2016) ("[A] given course of action often has simultaneous advantages and disadvantages, and this does not necessarily obviate motivation to combine [or to modify].").

Although Patent Owner disputes whether a rational reason exists to modify Foster to arrive at the subject limitation (discussed above), Patent Owner otherwise does not dispute reasonable expectation of success in doing so. *See generally* PO Resp. 32–56.

On balance, we determine that Petitioner sufficiently evidences that the skilled artisan would have had rational reasons to modify Foster to

execute code to perform storing data chunks on storage devices with a reasonable expectation of success in doing so.

c) Memory Coupled to Processor

Claim 1 recites, in part, "storing, in a memory *coupled to* the processor, at least one data chunk . . . on at least one storage device." Ex. 1001, 83:27–30 (Limitation 1F).

In the context of Petitioner's arguments for modifying Foster to execute code to perform storing data chunks on storage devices (*see supra* § III.D.2.b.2), Petitioner argues Foster's memory 402 "is *coupled to CPU 406* via bus 410" and "includes storage devices." Pet. 76–77 (citing Ex. 1003 ¶ 206) (emphasis added); *see* Ex. 1006, Fig. 16 (depicting memory 402 coupled to CPU 406 via bus 410 within computer system 400). Foster describes memory 402 as comprising various storage devices:

> Memory 402 may comprise any known type of data storage and/or transmission media, including magnetic media, optical media, random access memory (RAM), read-only memory (ROM), a data cache, a data object, etc. Moreover, memory 402 may reside at a single physical location, comprising one or more types of data storage, or be distributed across a plurality of physical systems in various forms.

Ex. 1006 ¶ 75 (*cited in* Pet. 76–77). Foster also describes that "[b]us 410 provides a *communication link* between each of the components in the computer system 400 and likewise may comprise any known type of transmission link, including electrical, optical, wireless, etc." *Id.* ¶ 76 (emphasis added). Thus, we find Foster plainly discloses memory comprising data storage devices coupled to a processor.

Although Patent Owner disputes at length whether Foster's recipient 430 is "coupled to" a processor (CPU 406) (*see, e.g.*, PO

Resp. 48–56; PO Sur-reply 14–21), Patent Owner does not dispute (and reasonably cannot) that Foster's memory 402 is coupled to CPU 406 via bus 410 and includes storage devices. *See generally* PO Resp.; PO Sur-reply.

Accordingly, we determine that Petitioner sufficiently demonstrates that Foster discloses, teaches, or at least fairly suggests the claimed "coupl[ing]" as recited in the limitation "storing, in a memory coupled to the processor, at least one data chunk . . . on at least one storage device."

d) Undisputed Limitations

Petitioner contends the remaining limitations of independent claim 1, including limitations 1PRE, 1A, 1B, 1C2, 1D, and 1E, also are disclosed, taught, or at least fairly suggested by Foster. Pet. 60–78. The Petition provides a detailed assessment of these remaining limitations, with references to disclosures in Foster and the declaration testimony of Petitioner's expert, Dr. Bhattacharjee. *See id.* Patent Owner does not contend that the remaining limitations in claim 1 are absent in Foster, except as implicated by the disputed limitations, and therefore, has waived such arguments.[6] For the reasons set forth in the Petition (*id.*), and based on the evidence cited therein, we find Petitioner sufficiently establishes that Foster

[6] *See* 37 C.F.R. § 42.23(a) ("Any material fact not specifically denied may be considered admitted."); *In re NuVasive, Inc.*, 842 F.3d 1376, 1379–82 (Fed. Cir. 2016) (holding that patent owner waived arguments on an issue that were not raised in its response after institution); *see also Papst Licensing GmbH & Co. KG v. Samsung Elecs. Am., Inc.*, 924 F.3d 1243, 1250 (Fed. Cir. 2019) (holding patent owner forfeited argument for patentability not presented to the Board); *Bradium Techs. LLC v. Iancu*, 923 F.3d 1032, 1048 (Fed. Cir. 2019) (explaining that arguments not presented to the Board are waived).

disclosed, taught, or at least fairly would have suggested to the skilled artisan these remaining limitations.

e) Conclusion for Independent Claim 1

For the foregoing reasons, and based on the complete record before us, we determine that Petitioner has demonstrated by a preponderance of the evidence that independent claim 1 is unpatentable as *obvious* over Foster. As such, we need not and do not address Petitioner's arguments regarding *anticipation* by Foster. *See infra* § III.F.

3. Dependent Claims 2, 3, 7, and 8

Claims 2, 3, 7, and 8 depend directly or indirectly from independent claim 1. Ex. 1001, 84:1–8, 84:20–25. The Petition provides a detailed assessment of these claims, with references to the Petition's analysis of claim 1, disclosures in Foster, and the declaration testimony of Dr. Bhattacharjee. Pet. 78–79, 83–84. Patent Owner does not contend that the limitations in claims 2, 3, 7, and 8 are absent in Foster, and therefore, has waived such arguments. *See* 37 C.F.R. § 42.23(a); *In re NuVasive*, 842 F.3d at 1379–82; *see generally* PO Resp.; PO Sur-reply. As discussed above, we are persuaded that the cited evidence sufficiently supports Petitioner's contentions that independent claim 1 would have been unpatentable as obvious over Foster, and also are persuaded that the cited evidence sufficiently shows claims 2, 3, 7, and 8 likewise obvious. For the same reasons provided above for independent claim 1, and the reasons set forth in the Petition (Pet. 78–79, 83–84), we conclude that Petitioner has demonstrated by a preponderance of the evidence that dependent claims 2, 3, 7, and 8 would have been unpatentable as obvious over Foster.

E. Obviousness of Claims 4–6, 9, and 10 over Foster

Petitioner contends claims 4–6, 9, and 10 would have been unpatentable under 35 U.S.C. § 103 as obvious over Foster. Pet. 80–83, 85. Claims 4–6, 9, and 10 each depend directly from independent claim 1. Ex. 1001, 84:9–19, 84:26–29. The Petition provides a detailed assessment of these claims, with references to the Petition's analysis of claim 1, disclosures in Foster, and the declaration testimony of Dr. Bhattacharjee. Pet. 80–83, 85. Patent Owner does not contend that the limitations in claims 4–6, 9, and 10 are absent in Foster, and therefore, has waived such arguments. *See* 37 C.F.R. § 42.23(a); *In re NuVasive*, 842 F.3d at 1379–82; *see generally* PO Resp.; PO Sur-reply. As discussed above, we are persuaded that the cited evidence sufficiently supports Petitioner's contentions that independent claim 1 would have been unpatentable as obvious over Foster, and also are persuaded that the cited evidence sufficiently shows claims 4–6, 9, and 10 likewise obvious. For the same reasons provided above for independent claim 1, and the reasons set forth in the Petition (Pet. 80–83, 85), we conclude that Petitioner has demonstrated by a preponderance of the evidence that dependent claims 4–6, 9, and 10 would have been unpatentable as obvious over Foster.

F. Anticipation or Obviousness of Claims 1–10 by or over Orsini

Petitioner contends claims 1–10 are unpatentable under 35 U.S.C. § 102 as anticipated by Orsini (Ex. 1005), or, alternatively, under 35 U.S.C. § 103 as obvious over Orsini. Pet. 3, 9–55. As discussed above in Sections III.D and III.E, we conclude that Petitioner has demonstrated by a preponderance of the evidence that all of the Challenged Claims (i.e., claims 1–10) are unpatentable under 35 U.S.C. § 103 over Foster.

Therefore, resolution of this proceeding does not require assessment of the foregoing additional challenges based on Orsini, and so for efficiency, we need not and do not address these challenges in this Decision. *See SAS Inst. Inc. v. Iancu*, 584 U.S. 357, 371 (2018) (holding a petitioner "is entitled to a final written decision addressing all of the claims it has challenged"); *Boston Sci. Scimed, Inc. v. Cook Grp. Inc.*, 809 F. App'x 984, 990 (Fed. Cir. 2020) (non-precedential) (recognizing that the "Board need not address issues that are not necessary to the resolution of the proceeding" and, thus, agreeing that the Board has "discretion to decline to decide additional instituted grounds once the petitioner has prevailed on all its challenged claims").

IV. CONCLUSION

Petitioner has met its burden to show, by a preponderance of the evidence, that all of the Challenged Claims (i.e., claims 1–10) would have been unpatentable under 35 U.S.C. § 103 over Foster.[7] Because of this determination accounting for all Challenged Claims, we exercise our discretion to decline to decide Petitioner's additional challenges to the same claims.

---

[7] Should Patent Owner wish to pursue amendment of the challenged claims in a reissue or reexamination proceeding subsequent to the issuance of this decision, we draw Patent Owner's attention to the April 2019 *Notice Regarding Options for Amendments by Patent Owner Through Reissue or Reexamination During a Pending AIA Trial Proceeding*. *See* 84 Fed. Reg. 16,654 (Apr. 22, 2019). If Patent Owner chooses to file a reissue application or a request for reexamination of the challenged patent, we remind Patent Owner of its continuing obligation to notify the Board of any such related matters in updated mandatory notices. *See* 37 C.F.R. § 42.8(a)(3), (b)(2).

In summary:

Claim(s)	35 U.S.C. §	Reference(s)/ Basis	Claim(s) Shown Unpatentable	Claim(s) Not Shown Unpatentable
1–10	102	Orsini[8]		
1–10	103	Orsini[9]		
1–3, 7, 8	102	Foster [10]		
1–10	103	Foster	1–10	
Overall Outcome			1–10	

V. ORDER

In consideration of the foregoing, it is hereby:

ORDERED that claims 1–10 of U.S. Patent No. 11,068,609 B2 are unpatentable; and

FURTHER ORDERED that, because this is a Final Written Decision, parties to this proceeding seeking judicial review of the Decision must comply with the notice and service requirements of 37 C.F.R. § 90.2.

[8] We need not reach this ground. *See supra* Section III.F.

[9] We need not reach this ground. *See supra* Section III.F.

[10] We need not reach this ground. *See supra* Section III.D.

For PETITIONER:

Elisabeth H. Hunt
Gregory S. Nieberg
WOLF, GREENFIELD & SACKS, P.C.
EHunt-PTAB@wolfgreenfield.com
GNieberg-PTAB@wolfgreenfield.com

For PATENT OWNER:

Stephen J. Elliott
Andrei Iancu
Haley M. Sanders
SULLIVAN & CROMWELL LLP
elliotts@sullcrom.com
iancua@sullcrom.com
sandersh@sullcrom.com

Kenneth Weatherwax
LOWENSTEIN & WEATHERWAX LLP
Weatherwax@lowensteinweatherwax.com