UNITED STATES PATENT AND TRADEMARK OFFICE

BEFORE THE PATENT TRIAL AND APPEAL BOARD

SAMSUNG ELECTRONICS CO., LTD., and

SAMSUNG ELECTRONICS AMERICA, INC.,

Petitioners,

v.

XIFI NETWORKS R&D, INC.,

Patent Owner.

Case IPR2025-01205

Patent 12,003,976

PATENT OWNER'S SURREPLY

Table of Contents

Page(s)

I. CLAIM CONSTRUCTION 1

II. PETITIONERS' NEW REPLY ARGUMENTS SHOULD BE DISREGARDED 2

III. THE PETITION DOES NOT ESTABLISH THAT THE APPLIED REFERENCES RENDER THE CHALLENGED CLAIMS UNPATENTABLE.....11

A. The Petition Does Not Establish that Chincholi Discloses Limitations Common to All Challenged Claims.....11

1. "virtual MAC interface" 11

2. "virtual PHY interfaces" that "feed information regarding the bandwidth availabilities".....15

3. "does not prevent".....17

4. "without requiring disassociation".....19

B. The Petition Does Not Establish that Chincholi in View of Secondary References Renders Any Challenged Claim Unpatentable.....21

1. Lack of Motivation to Combine Chincholi and Riggert.....21

2. Lack of Motivation to Combine Chincholi and Clegg 23

IV. CONCLUSION.....24

Table of Authorities

Page(s)

Cases

Amgen Inc. v. Hoechst Marion Roussel, Inc.,
314 F.3d 1313 (Fed. Cir. 2003) 10

Apple Inc. v. Omni MedSci, Inc.,
No. 2023-1034, 2024 WL 3084509 (Fed. Cir. June 21, 2024) 9

Apple Inc. v. Theta IP, LLC,
IPR2024-00817, Paper 31 (Nov. 24, 2025) 10

Ariosa Diagnostics v. Verinata Health, Inc.,
805 F.3d 1359 (Fed. Cir. 2015) 6, 9

Axonics, Inc. v. Medtronic, Inc.,
75 F.4th 1374 (Fed. Cir. 2023) 4, 9

Corephotonics, Ltd. v. Apple Inc.,
84 F.4th 990 (Fed. Cir. 2023) 4, 9

Dropbox, Inc. v. Datanet, LLC,
IPR2024-00079, 2025 WL 1203665 (P.T.A.B. Apr. 25, 2025) 9

Intelligent Bio-Sys., Inc. v. Illumina Cambridge Ltd.,
821 F.3d 1359 (Fed. Cir. 2016) 3

Medtronic, Inc. v. Teleflex Innovations S.à.r.l.,
69 F.4th 1341 (Fed. Cir. 2023) 24

Netflix, Inc. v. DivX, LLC,
84 F.4th 1371 (Fed. Cir. 2023) 3, 9

Parkervision, Inc. v. Vidal,
88 F.4th 969 (Fed. Cir. 2023) 4, 9

Revvo Techs., Inc. v. Cerebrum Sensor Techs, Inc.,
IPR2025-00632, Paper 20 (Nov. 3, 2025) 10

Revvo Techs., Inc. v. Cerebrum Sensor Techs., Inc.,
IPR2025-00632, Paper 36 (Jan. 26, 2026) 10

Statutes

35 U.S.C. § 312(a)(3) 3

Rules

37 C.F.R. § 42.104(b)(3)-(5) 3

Patent Owner Exhibit List

Exhibit No.	Description
EX2001	Complaint, *XiFi Networks R&D, Inc. v. Samsung Electronics Co., Ltd. and Samsung Electronics America, Inc.*, No. 2:24-cv-01057-JRG, Dkt. 1 (E.D. Tex. Dec. 17, 2024).
EX2002	First Amended Docket Control Order, *XiFi Networks R&D, Inc. v. Samsung Electronics Co., Ltd. and Samsung Electronics America, Inc.*, No. 2:24-cv-01057-JRG, Dkt. 28 (E.D. Tex. Apr. 14, 2025).
EX2003	Plaintiff's First Amended Complaint, *XiFi Networks R&D, Inc. v. Samsung Electronics Co., Ltd. and Samsung Electronics America, Inc.*, No. 2:24-cv-01057-JRG, Dkt. 13 (E.D. Tex. Mar. 11, 2025).
EX2004	Defendants' Answer and Affirmative Defenses to Plaintiff's First Amended Complaint, *XiFi Networks R&D, Inc. v. Samsung Electronics Co., Ltd. and Samsung Electronics America, Inc.*, No. 2:24-cv-01057-JRG, Dkt. 31 (E.D. Tex. Jun. 9, 2025).
EX2005	Defendants' P.R 3.3 and 3.4 Invalidity Contentions (Jun. 18, 2025).
EX2006	Table 1 Comparing Select Sections of Almeroth Declaration to Corresponding Sections of Petition (EX1002).
EX2007	Table 2 comparing common typographic errors(s) between petition and the Almeroth Declaration (EX1002).
EX2008	Declaration of Dr. Robert Akl, D.Sc.
EX2009	American Heritage Dictionary (5th Ed., 2012).
EX2010	Andrew S. Tanenbaum, *Computer Networks* (5th Ed., 2011).
EX2011	U.S. Patent No. 8,078,208
EX2012	U.S. Patent No. 9,560,656

Exhibit No.	Description
EX2013	Curriculum Vitae of Dr. Robert Akl, D.Sc.
EX2014	[RESERVED]
EX2015	[RESERVED]
EX2016	[RESERVED]
EX2017	Second Declaration of Dr. Robert Akl, D.Sc.
EX2018	Further excerpts from Andrew S. Tanenbaum, *Computer Networks* (5th Ed., 2011).
EX2019	International Organization for Standardization and the International Electrotechnical Commission, ISO/IEC 7498-1, Information technology—Open Systems Interconnection—Basic Reference Model: The Basic Model (2d. Ed. corrected and reprinted 1996)
EX2020	Amended Joint Claim Construction Statement, *XiFi Networks R&D, Inc. v. Samsung Electronics Co., Ltd. and Samsung Electronics America, Inc.*, No. 2:24-cv-01057-JRG, Dkt. 62 (E.D. Tex. Feb 27, 2026).
EX2021	Declaration of Dr. Mark Mahon in Support of Claim Construction, *XiFi Networks R&D, Inc. v. Samsung Electronics Co., Ltd. and Samsung Electronics America, Inc.*, No. 2:24-cv-01057-JRG
EX2022	Excerpts from the file history of U.S. Patent No. 11,818,591
EX2023	Excerpts from the file history of U.S. Patent No. 11,950,105
EX2024	Excerpts from the file history of U.S. Patent No. 11,849,337
EX2025	Excerpts from the file history of U.S. Patent No. 11,856,414
EX2026	Excerpts from the file history of U.S. Patent No. 12,169,756
EX2027	Excerpts from the file history of U.S. Patent No. 12,114,177
EX2028	Excerpts from the file history of U.S. Patent No. 12,250,564

Exhibit No.	Description
EX2029	Excerpts from the file history of U.S. Patent No. 11,974,143
EX2030	Transcript of the Deposition of Dr. Mark Mahon, *XiFi Networks R&D, Inc. v. Samsung Electronics Co., Ltd. and Samsung Electronics America, Inc.*, No. 2:24-cv-01057-JRG
EX2031	Samsung's Proposed Claim Constructions for the Terms and Phrases Identified for Construction Per Local Patent Rule 4-2, *XiFi Networks R&D, Inc. v. Samsung Electronics Co., Ltd. and Samsung Electronics America, Inc.*, No. 2:24-cv-01057-JRG (E.D. Tex. Jan. 14, 2026)
EX2032	Curriculum Vitae of Dr. Robert Akl, D.Sc.
EX2033	Declaration of Aaron R. Fahrenkrog in Support of Motion for Pro Hac Vice Admission

I. CLAIM CONSTRUCTION

In their Petition, Petitioners applied plain and ordinary meaning to all claim terms and did not request construction of any term. Pet. at 9; EX1002, ¶56. Thereafter, in the district court, Petitioners agreed to several narrowing constructions:

Claim Term	Agreed Construction
"virtual MAC interface"	"a software- or logical-based interface that is separately addressable from the recited actual MAC interfaces and that obscures the recited actual MAC interfaces from higher protocol stack layers"
"in a manner transparent to any layer of the wireless networking device above the processing interface"	"in a manner where any protocol stack layer of the wireless networking device above the processing interface is unaware of the operation of the processing interface"
"wireless transceiver(s)"	a physical component that wirelessly transmits and receives data"

EX1028 at 7-11.

Further, the district court adopted narrowing constructions based on disputes raised by Petitioners:

Claim Term	District Court Construction
"information regarding the bandwidth availabilities of the first and second wireless transceivers"	"information regarding current bandwidth availabilities of each of the wireless transceivers"

Claim Term	District Court Construction
"wireless networking device"	"device that sends and receives data over a wireless network"
Preambles	Limiting as to "wireless networking device" and "circuitry"; otherwise not limiting
"different bands of frequencies"	"different ranges of frequencies in which the transceivers are capable of operating"

EX1027 at 25-26. Petitioners now request that the Board apply the district court constructions. Reply at 1-4.

II. PETITIONERS' NEW REPLY ARGUMENTS SHOULD BE DISREGARDED

As described above, Petitioners no longer advocate for the application of across-the-board plain and ordinary meaning and instead advocate for application of the district court constructions. Pet. at 9; EX1002, ¶56; Reply at 1-4; EX1027 at 25-26; EX1028 at 7-11. However, since shifting claim construction positions to those Petitioner advocated for in the district court, Petitioners' Reply positions are not supported by the Petition and therefore must be disregarded.

Petitioners are wrong that "there is no inconsistency between Petitioner's District Court positions and the Petition."[1] Reply at 1. Instead, Petitioners'

[1] Indeed, Petitioners concede that they proposed narrowed constructions in the district court "to prevent PO from reading the claims overbroadly"—i.e., that

arguments and evidence applying the district court constructions were not present in their Petition, and in some cases contradict the Petition.

This is a violation of the baseline requirements for a petition—which must "identif[y], in writing and with particularity… the evidence that supports the grounds for the challenge to each claim" and which must contain statements of "[h]ow the challenged claim is to be construed," "[h]ow the construed claim is unpatentable under the statutory grounds identified," and "the relevance of the evidence to the challenge raised, including identifying specific portions of the evidence that support the challenge." 35 U.S.C. § 312(a)(3); 37 C.F.R. § 42.104(b)(3)-(5); *Netflix, Inc. v. DivX, LLC*, 84 F.4th 1371, 1377 (Fed. Cir. 2023) ("It is of the utmost importance that petitioners in the IPR proceedings adhere to the requirement that the initial petition identify 'with particularity' the 'evidence that supports the grounds for the challenge to each claim.'" (quoting *Intelligent Bio-Sys., Inc. v. Illumina Cambridge Ltd.*, 821 F.3d 1359, 1367 (Fed. Cir. 2016)).

The Federal Circuit has made clear that "[t]he IPR petition ... must provide an understandable explanation of the element-by-element specifics of the patentability challenges, including the identification of particular portions of prior art on which

---

Petitioners' requested constructions are narrower than would be permissible applying plain and ordinary meaning. Reply at 1.

the petitioner is relying," and that "[g]iven these "'strict ... requirements,' the Board is not permitted to entertain '[s]hifting arguments.'" *Corephotonics, Ltd. v. Apple Inc.*, 84 F.4th 990, 1001-02 (Fed. Cir. 2023) (internal citations omitted).

This rule has an exception: a Petitioner may make new arguments in response to a post-institution claim construction proposal by Patent Owner or the Board. *Axonics, Inc. v. Medtronic, Inc.*, 75 F.4th 1374, 1384 (Fed. Cir. 2023); *see also Parkervision, Inc. v. Vidal*, 88 F.4th 969, 979–80 (Fed. Cir. 2023). As relevant here, Petitioners themselves agreed to or proposed the constructions (for "virtual MAC interface" and "information regarding bandwidth availability…") that created the need for the new arguments that are unsupported in the Petition. EX1027 at 25-26; EX1028 at 6-11. Therefore, the *Axonics* rule, based on APA fairness concerns, should not apply to Petitioners, and to hold otherwise would reward the gamesmanship *Axonics* sought to avoid. *Axonics*, 75 F.4th at 1384 ("We are reluctant to adopt a construction of the APA and the Board's rules that would permit such gamesmanship.").

Moreover, even when the law allows the opportunity to respond to a claim construction position proposed by the Board or Patent Owner, that response should "rel[y] on the same embodiments for each invalidity ground as were relied on in the petition*." Id.*; *see also Parkervision*, 88 F.4th at 980. Here, Petitioners, in shifting

claim construction positions, rely on wholesale new citations of the prior art, including previously unidentified embodiments.

For example, with regard to the "virtual MAC interface," the Petition does not address whether Chincholi's OMMA meets the claim construction Petitioners now puts forward: (1) "a software- or logical-based interface"; (2) "separately addressable from the recited actual MAC interfaces"; and that (3) "obscures the recited actual MAC interfaces from higher protocol stack layers." EX1028 at 7; Reply at 4-5. Rather, the Petition argued that the OMMA "virtualizes" through aggregation and, with reference to Chincholi's Figures 5 and 6, identifies modules that are purportedly functional equivalents to the blocks of '976 patent's virtual MAC interface. *See* Pet. at 27-30; EX1002, ¶¶102-105. Indeed, the words "separately addressable" and "obscures" do not appear at all in the Petition. *See generally* Pet. Instead, these arguments were delivered for the first time on Reply, after institution, and after Patent Owner's opportunity to contest Petitioners' arguments with evidence and expert testimony had passed.

As to the "separately addressable" aspect of the virtual MAC interface construction that Petitioners negotiated in the district court, Petitioners' Reply improperly pivots to a new embodiment from Chincholi that is not disclosed in the Petition. Reply at 5-7; EX1026, ¶¶33-60. Because Figures 5 and 6, cited in the Petition, provide generic descriptions of one "example OMMA layer" (EX1005,

[0017]), they do not disclose how, if at all, Chincholi's OMMA is "addressable," in particular how the OMMA is "*separately* addressable." Therefore, Petitioners' Reply and supplemental expert declaration mine for a different embodiment to satisfy this requirement—Figure 31 and corresponding description (EX1005, [0243]-[0245]), which Petitioners argue describes "OMMA-directed signaling to the NT's OMMA Controller." EX1026, ¶42.

But none of this is cited in the Petition. Indeed, every portion of Chincholi cited as support for "separately addressable" in the Reply is cited for the first time—and none is contained anywhere in the Petition or initial declaration. Reply at 7 (citing for the first time EX1005, [0243]-[0245], Fig. 31); EX1026, ¶¶37-43 (citing for the first time EX1005, [0242]-[0245], Fig. 31). Petitioners thus improperly "reli[ed], in [their] Reply submissions, on previously unidentified portions of a prior-art reference to make a meaningfully distinct contention." *Ariosa Diagnostics v. Verinata Health, Inc.*, 805 F.3d 1359, 1367 (Fed. Cir. 2015).

Moreover, the Figure 31 embodiment does not pertain to the embodiment in Figures 5 and 6. Chincholi contains 388 paragraphs describing 59 figures. EX1005. Chincholi does not tie Figure 31 to Figures 5 and 6. Rather, "FIG. 31 illustrates an example call flow illustrating signaling corresponding to an example of a RAT availability update procedure described herein." EX1005, [0243]. Chincholi in fact describes four different figures as different "example call flow[s]," including

Figure 31. EX1005, [0042] (describing Fig. 31), [0044] (Fig. 33), [0047] (Fig. 36), [0071] (Fig. 59).

Petitioner's expert references his earlier testimony, attempting to connect the Reply to the Petition. EX1026, ¶37 (citing EX1002, ¶107). But that initial testimony highlights one particular signaling call path—"A2"—with regard to a different limitation ("information regarding bandwidth availability"):

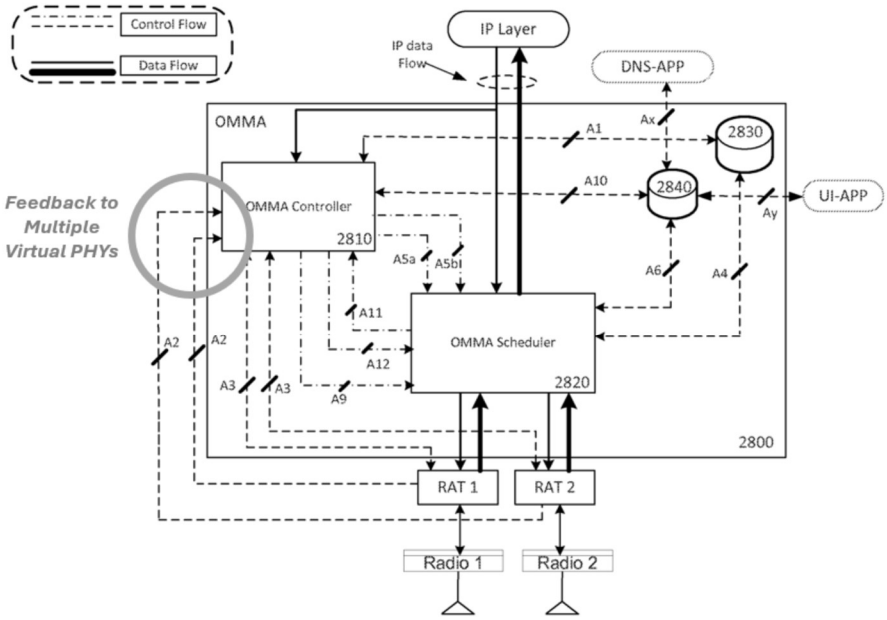

FIG. 28

EX1002, ¶107 (citing EX1005, Fig. 28 (annotations added)); *see also* Pet. at 30-31 (same). Meanwhile, the description of Figure 31 that Petitioners cite in Reply with regard to the virtual MAC interface discusses the separate "A3" signaling call path. EX1005, [0243]. Petitioners' expert's reference back to analysis of an element of a

different embodiment related to a different limitation cannot make the Reply's analysis of Figure 31 related to the Petition.

Similarly, as to "obscures … from higher protocol stack layers," Petitioners and their expert also rely heavily on totally new portions of Chincholi, including reference to "MSDUs" in Table 1—which were never previously cited with regard to the virtual MAC interface. *See* Reply at 6 (citing for the first time with regard to the virtual MAC interface EX1005, [0128], [0138], [0172]-[0178] & Table 1); EX1026, ¶¶44-50, 74 (citing for the first time with regard to the virtual MAC interface EX1005, [0138], [0171]-[0173], [0176-179] & Table 1). Consequently, Patent Owner's expert Dr. Akl was never able to opine on Petitioners' Table 1 virtual MAC interface arguments.

Moreover, certain of Petitioners' Reply arguments are contradictory to those in the Petition. The Petition argued that the "information regarding bandwidth availability" limitation was met by disclosure in Chincholi of "feedback metrics" and "feedback statistics." Pet. at 30-31; EX1002, ¶¶106-107, 111. The Petition and accompanying declaration said nothing about feedback being "current." *Id.* In Reply, Petitioners and their expert now argue for the first time that more than statistics are required, advocating for the district court's construction that requires information be "current." Reply at 10-12; EX1026, ¶¶61-70. Further, the Reply argues for the first time that Chincholi discloses such "current" bandwidth availability information. *Id.*

Again, these arguments are without merit—but made for the first time after Patent Owner's opportunity to contest them with evidence and expert testimony had passed. *See infra*, Section III.A.2; *see also Corephotonics*, 84 F.4th at 1001-1002 (noting that "the Board is not permitted to entertain '[s]hifting arguments'").

The Board should disregard these new arguments. *See Netflix*, 84 F.4th at 1377-1378 (argument based on new embodiment forfeited because not raised in petition); *Ariosa*, 805 F.3d at 1367 ("We see no error in the Board's rejection of [petitioner's] reliance, in its Reply submissions, on previously unidentified portions of a prior-art reference to make a meaningfully distinct contention."); *see also Parkervision*, 88 F.4th at 980; *Axonics*, 75 F.4th at 1384; *Apple Inc. v. Omni MedSci, Inc.*, No. 2023-1034, 2024 WL 3084509, at *6 (Fed. Cir. June 21, 2024) (allowing reply arguments because they rely on same embodiments as petition); *Dropbox, Inc. v. Datanet, LLC*, IPR2024-00079, 2025 WL 1203665, at *16 (P.T.A.B. Apr. 25, 2025) ("That holding in *Axonics* controls here, because the Reply Brief relies on the same embodiments … that are cited in the Petition."). In any event, Petitioners' new arguments should be rejected on the merits. *See infra*, Sections III.A.1-2.

It would be similarly inappropriate for Petitioners to continue to assert the plain and ordinary meaning arguments laid out in the Petition while operating under narrowed constructions in the district court. Pet. at 9; EX1002, ¶56; EX1027; EX1028. "It is axiomatic that claims are construed the same way for both invalidity

and infringement." *Amgen Inc. v. Hoechst Marion Roussel, Inc.*, 314 F.3d 1313, 1330 (Fed. Cir. 2003). The Director has recently made clear that only in rare circumstances may a Petitioner take inconsistent claim construction positions before the Board and in the district court. *Revvo Techs., Inc. v. Cerebrum Sensor Techs, Inc.*, IPR2025-00632, Paper 20 at 4 (Nov. 3, 2025) (precedential). While a petitioner's inconsistent positions may be excused based on sufficient explanation as to "why the different positions are warranted" (*id.* at 5), a petitioner "may proffer a different, broader construction before the Board when the district court *already has rejected* petitioner's narrower construction"—not when the district court has accepted it (*Revvo Techs., Inc. v. Cerebrum Sensor Techs., Inc.*, IPR2025-00632, Paper 36 at 4 (Jan. 26, 2026) (*Revvo II*) (emphasis in original)). Therefore, under *Revvo*, were Petitioners to continue to put forward plain and ordinary meaning here, the Petition should be terminated. *Revvo II*, Paper 36 at 3 (petitioners may not "have it both ways"); *see also, e.g.*, *Apple Inc. v. Theta IP, LLC*, IPR2024-00817, Paper 31 at 19-20 (Nov. 24, 2025) (evaluating *Revvo* in final written decision).

III. THE PETITION DOES NOT ESTABLISH THAT THE APPLIED REFERENCES RENDER THE CHALLENGED CLAIMS UNPATENTABLE

A. The Petition Does Not Establish that Chincholi Discloses Limitations Common to All Challenged Claims

1. "virtual MAC interface"

Petitioners' Reply, despite improper new arguments and evidence, confirms that Chincholi does not disclose the claimed "virtual MAC interface," either under plain and ordinary meaning or the district court's construction. *See* Paper 17 (POR), Section VI.A.1; *see also supra*, Section II.

First, Chincholi's OMMA is not "separately addressable," notwithstanding the Reply's new argument that "WTRUs in Chincholi send signaling messages regarding their availability to the OMMA of associated NTs." Reply at 7. "Separately addressable from the recited actual MAC interfaces" means that the virtual MAC interface has its own address that it uses for purposes of transferring data. *See* POR at 11; EX2017, ¶¶53-55; EX2010 at 17 ("An address field within each packet specifies the intended recipient."), *id.* at 34 (discussing "addressing"). This is consistent with the way Chincholi uses the term "address"—to indicate the destination where data is sent. *See, e.g.*, EX1005, [0004] ("The first and second IP packets may be part of an Internet Protocol (IP) flow addressed to a receiving node."); [0007] (similar); [0200] (similar); [0383] (similar).

Nothing in the Reply demonstrates that the OMMA Controller itself has an address, let alone an address to which any data is sent. *See id.*; EX1026, ¶¶37-43, 56-57. Rather, Chincholi discloses only that the NT and WTRU have addresses, and messages pass through the OMMA, which acts like an aggregator and so does not have its own address, identifier, endpoint, or interface. Chincholi's OMMA merely receives IP packets and distributes them among the RAT protocol stacks, operating as a pass-through. EX1005 [0243]-[0245]; EX2017, ¶¶78-79. In sum, the OMMA does not serve as a proxy for an actual MAC interface or multiple actual MAC interfaces, as the virtual MAC interface of the '976 patent does. EX2017, ¶54.

Moreover, for a virtual MAC interface to be "separately addressable from the recited actual MAC interfaces," the virtual MAC interface must intervene between higher protocol layers sending data down the protocol stack and the actual MAC interfaces. *See* EX2017, ¶¶54, 80. In a new argument, the Reply points to a "message" about RAT availability to satisfy this element. Reply at 7. However, this is not a data transfer. Moreover, the message comes from the physical layer *below* the actual MAC interfaces, and not above. *See* EX1005, [0243]-[0245]; EX1026, ¶¶37-43.

Second, Chincholi's OMMA does not "obscure the recited actual MAC interfaces from higher protocol stack layers." Because the actual MAC interfaces sit at the MAC sublayer of layer 2, the actual MAC interfaces must be obscured to

anything above layer 2, and the virtual MAC interface itself must be located in layer 2 in order to obscure anything above it. *See* EX2010 (Tanenbaum) at 300. While Petitioners concede that "Chincholi's OMMA operates as a common layer immediately above the MAC layers," it is clear that the OMMA sits at layer 3. EX1026, ¶49. This is because it can communicate directly with layer 4 (which only an adjacent layer can) and because it performs layer 3 packet routing functions. POR at 38-41; EX2017, ¶¶88-89; EX1005, [0139], [0171]-[0186], [0369]-[0370]; EX2018 (Tanenbaum) at 42-44; EX2019, § 7.5.4.2.2. Therefore, OMMA does not obscure the actual MAC interfaces from layer 3, a protocol stack layer higher than the actual MAC interfaces.

Moreover, Petitioners' new argument that Chincholi's reference to MSDUs means that actual MAC addresses are obscured is incorrect. Reply at 6. Petitioners' argument that the MSDUs "lack MAC headers having actual MAC addresses" (*id.*) misses the point: a lack of header or address does not obscure the existence of the *interface itself* from higher layers. In fact, Chincholi separately makes the actual MAC interfaces and their associated addressing information available to the OMMA and, as explained by Patent Owner's expert, does not disclose a virtual MAC interface that obscures those actual MAC interfaces from higher layers. EX2017, ¶¶80-81; EX1005, [0192]. Rather than obscuring the existence of the actual MAC interfaces as required by the construction, Chincholi merely "combines packets from

different RATs," leaving the existence of the many RATs apparent as the OMMA forwards the packets. *Id.* The reference to MSDUs is a red herring.

Additionally, Petitioners are wrong that "Chincholi's OMMA embodies all of the functionality that the '976 patent associates with the 'virtual MAC interface.'" Reply at 9. Patent Owner does not "quibble" with the comparison between functional blocks—Patent Owner pointed out that (1) the Petition does not explain at all why or how those blocks are equivalent; and (2) when examined, the blocks serve different functions. POR at 34-38; EX2017, ¶¶84-87. On Reply, Petitioners provide no further explanation for why Chincholi's traffic shaping module is the functional equivalent of the '976 patent's ultra-streaming block or why Chincholi's MAC resource reservation module is the equivalent of the '976 patent's processing block. Reply at 9. Moreover, Petitioners' expert's contention that Chincholi's IP QoS Scheduler module 603 is equivalent to the '976 patent's decision block because it has "decision-making functionality" is incorrect. EX1026, ¶¶58-59. The decision block of the challenged claims does not perform generic decision-making functions, but rather specific ones: "determin[ing] the size and type of data stream being received, and the type of processing necessary to put the stream in a format where it is capable of being transmitted." EX1001 at 3:31-34. Separating individual QoS streams is not equivalent to that functionality. EX1005, [0143]; EX2017, ¶85. Finally, Patent Owner indeed disputes that dependent claims 4-6 are met (*see* Reply

at 9); each requires the virtual MAC interface and other disputed claim limitations that are absent from claim 1, merely with a more specific virtual MAC interface that is also not present in Chincholi. EX1001, 13:8-15.

In all, Petitioners' new, strained, and unsupported arguments cannot demonstrate that Chincholi discloses the virtual MAC interface under the district court construction, because Chincholi's OMMA is not separately addressable from the actual MAC interfaces and does not obscure the actual MAC interfaces from higher layers, nor does it perform the functions of the claimed virtual MAC interface.

2. "virtual PHY interfaces" that "feed information regarding the bandwidth availabilities"

The Petition fails to show that Chincholi discloses "virtual PHY interfaces" that "feed information regarding the bandwidth availabilities of the first and second wireless transceivers" because Chincholi's feedback relates to channel quality, not bandwidth availability, and because it is not "current," as required by the district court claim construction.

Petitioners and their expert previously pointed to feedback "statistics" and portions of Chincholi that describe the feedback metrics as including "averages." Pet. at 30-31, 33-34; EX1002, ¶¶106-107, 111; EX1005, [0161], Table 2.

Now operating under the district court claim construction proposed by Petitioners that requires "current" bandwidth availability information, Petitioners no

longer argue that statistics would qualify. Though Petitioners concede that Chincholi discloses feedback metrics that "reflect the average state of the system," they now argue Chincholi "does not exclude current resource-availability information." Reply at 11. But the examples cited by Petitioners are inapposite.

Petitioners point to Chincholi's disclosure that, "[a]t startup, the OMMA layer may receive the available bandwidth of each of the one or more RATs." Reply at 11 (citing EX1005 [0167]). But "[a]t startup," no bandwidth is yet being used. Rather, the OMMA layer receives "the total channel bandwidths supported by" individual RATs. EX1005, [0163]. Understanding total channel bandwidth availability does not indicate real-time or current bandwidth usage, or what bandwidth remains available.

Petitioner also argues that Chincholi discloses the "information" limitation because it "discloses dynamic RAT switching based on 'instantaneous channel quality/availability of the RATs.'" Reply at 11 (quoting EX1005 [0154]). But this disclosure refers to channel quality, based on criteria such as "low throughput, low RSSI, transmission control protocol (TCP) re-ordering trigger, high medium access delay, and high end-to-end delay." EX1005, [0155]. These types of channel characteristics do not relate to bandwidth availability, but rather to quality of service. There is no disclosure of "current" bandwidth availability information based on these types of feedback.

In all, Petitioners have pivoted from their original argument under the plain and ordinary meaning, meant to capture the disclosure of their primary reference. Now that they must operate under their chosen, narrower district court claim construction, proposed in the forum where Petitioners argue for non-infringement, their new arguments contradict their old ones—and fail to show that Chincholi discloses "information regarding the bandwidth availabilities" of the transceivers. *See also supra*, Section II.

3. "does not prevent"

Petitioners' Reply arguments confirm that Chincholi does not disclose the "does not prevent" limitation. The limitation recites that utilization of certain bandwidth portions "does not prevent" another wireless networking device from utilizing remaining portions of available bandwidth of the same transceiver resources. EX1001, 12:58-67. Petitioners claim that "Figure 1 does not disclose *simultaneous* use of different portions of available bandwidth by different users." Reply at 16. But that is exactly what Figure 1 shows: APP A and APP D sharing the second MAC/PHY pair:

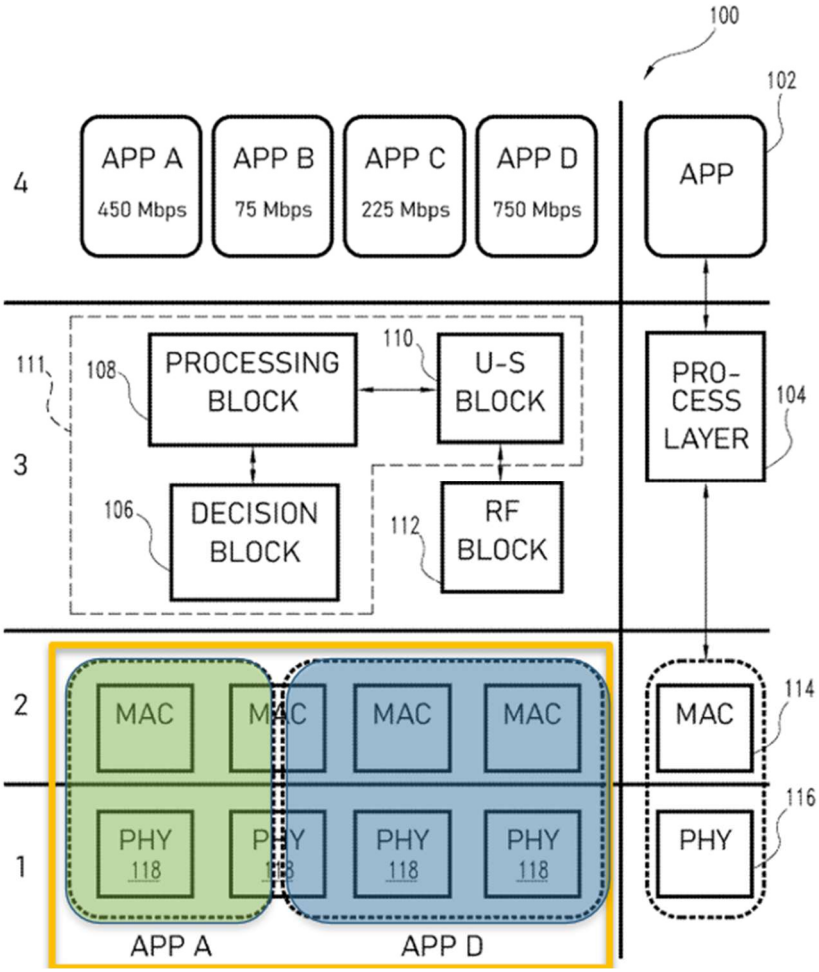

EX1001, Fig. 1 (annotations added); EX2017, ¶100 ("A POSITA would understand the plain and ordinary meaning [of the "does not prevent" limitation] to be that two devices or two applications could share a single MAC/PHY pair at the same time.").

Patent Owner previously argued that the Petition does not identify any portion of Chincholi that expressly discloses simultaneous sharing of transceiver resources by two applications or devices; Petitioners have no response on Reply. POR at 51-52. Indeed, Petitioners appear to concede that their argument regarding "multi-WTRU multi-IP flow cases" alone does not disclose this limitation, having no

answer for Patent Owner's point that Chincholi's packets are queued and distributed sequentially and therefore that transceiver resources are not shared. Reply at 14 (citing POR 50).

Rather, Petitioners rely solely on the fact that Chincholi uses the word "OFDMA" without explaining how OFDMA would be implemented within Chincholi. *Id.* at 15. Indeed, Chincholi discloses operating only in pre-OFDMA 802.11 standards, nor do Chincholi, Petitioners, or their expert describe how a POSITA would know to modify those standards to allow for implementation of OFDMA. EX1005, [0116] ("The NT may operate using an 802.11 system (*e.g.,* 11a/b/g/n)…."); EX2017, ¶103 (noting OFDMA was not implemented until 802.11ax or WiFi 6, which postdates the standards disclosed in Chincholi); POR at 52.

Petitioners are also wrong that Chincholi's disclosure of "contention" suggests "sharing an operating frequency." EX1026, ¶87. Rather, "contention" implies competition for a resource—wherein the loser is "locked out"—and this disclosure shows that Chincholi does not disclose the "does not prevent" limitation. EX2017, ¶101; POR at 51-52.

4. "without requiring disassociation"

Petitioners claim that Chincholi discloses the "without requiring disassociation" limitation via "duplicating packets across RATs during switching."

Reply at 16. Petitioners point to passages in Chincholi where multiple RATs carry certain duplicated packets, *id.* (citing EX1005, [0255], [0381]), but this does not suggest that *both* RATs carrying the duplicated packets will form associations with the actual MAC and PHY interfaces. Rather, these passages merely describe a typical "break before make" situation where only one RAT is selected (and "replace[s]" the other RAT) based on feedback metrics or QoS requirements. EX1005, [0255] ("The RAT with the best feedback metrics, for example, such as but not limited to average packet delay or packet error rate, may be selected."); [0381] (describing duplication across two RATs, such as "a RAT which is not able to fulfill the QoS requirement and a RAT chosen to replace that RAT"). Based on this, a POSITA would view Chincholi as a typical break-before-make system under which a first association is broken before another is made. *See* EX2017, ¶107.

Petitioners claim that disabling a low-quality RAT could be make-before-break because "[n]owhere in PO's cited passages does Chincholi teach or suggest that low-quality RATs are disabled *before* switching to the better-quality RAT." Reply at 16-17. This ignores the state of the art at the time of Chincholi: break-before-make was typical and the default. EX2017, ¶¶105-107. Unless explicitly discussed, a POSITA would not have understood a system to employ make-before-

break.[2] Chincholi does not discuss forming a second association without breaking the first, and therefore, a POSITA would expect that the second association would require disassociation, especially where the disclosure specifically discusses "disabl[ing]" the lower quality RAT. *Id.*; EX1005, [0154]-[0155].

B. The Petition Does Not Establish that Chincholi in View of Secondary References Renders Any Challenged Claim Unpatentable

1. Lack of Motivation to Combine Chincholi and Riggert

Petitioners assert that a POSITA would have been motivated to combine "Chincholi's existing OMMA architecture" with Riggert's "bondable virtual interfaces as flexible interfaces to underlying physical interfaces"—but never explain why. EX1026, ¶¶102-103; *see also* Reply at 18-20. Petitioners' arguments ignore Patent Owner's explanation of why a POSITA would not be motivated to combine these references—because the two references solve different problems using fundamentally different architectures, at different layers of the networking

[2] Indeed, Petitioners' expert appears to recognize that Chincholi does not explicitly disclose make-before-break, opining that "at a minimum, 'make before break' would have been obvious to implement in Chincholi." EX1026, ¶97. However, it would not have been obvious. *See* EX2017, ¶¶105-107; ¶117 (a POSITA would not be motivated to combine a break-before-make system with a make-before-break system).

stack, and according to incompatible design philosophies. EX2017, ¶¶108-113. Riggert is directed to improving end-to-end streaming performance between two endpoints that each possess multiple heterogeneous network interfaces. *Id.*, ¶110; EX1006, Abstract. Chincholi, by contrast, is directed to interworking among multiple Radio Access Technologies (RATs) through an OMMA layer that selects among heterogeneous wireless access technologies based upon QoS requirements, channel conditions, and mobility considerations. EX2017, ¶111, EX1005, [0003]-[0007].

Moreover, Riggert operates on a much higher layer—the application layer. The Reply does not contest this fact, instead arguing that the processing layer need not be in Layer 2. Reply at 20. As described above, however, the virtual MAC interface, in order to obscure the actual MAC interfaces from higher layers, must sit in the same layer as the actual MAC interfaces—Layer 2. *See supra*, Section III.A.1. Moreover, the virtual MAC interface along with the virtual PHY interfaces form the processing layer—that must therefore also sit at the same layer as the actual MAC interfaces. *See* EX1001, 12:8-10 (claim 1 reciting forming in the processing interface (i) "at least one virtual MAC interface" and (ii) "first and second virtual PHY interfaces…"). Petitioners never explain why a POSITA would look to functionality associated with a distant layer for a solution in the MAC layer.

As in the Petition and initial declaration, the Reply and supplemental expert declaration offer nothing beyond hindsight to explain why the two disparate systems of Chincholi and Riggert would be combined. A POSITA would not be so motivated; Petitioners' arguments based on Riggert fail.

2. Lack of Motivation to Combine Chincholi and Clegg

Petitioners' Reply talks past the points made by Patent Owner regarding a POSITA's lack of motivation to combine Chincholi with Clegg. Reply at 18, 21-22. Patent Owner did not assert that Petitioners advocate for Clegg's ultra-wide band tuner itself to be incorporated into Chincholi, but rather explained that a POSITA would not be motivated to incorporate aspects of Clegg into Chincholi's disparate system, nor to undertake the extensive technical reworking required to do so. EX2017, ¶115. This is true even as to modifying "Chincholi's monitoring and response techniques" with "Clegg's teachings for addressing carrier-specific interference within bandwidth channels." Reply at 21. Moreover, a POSITA would not have been motivated to combine Chincholi with Clegg because the two references solve different technical problems at different layers of the IEEE 802.11 protocol stack using entirely different mechanisms. EX2017, ¶115; EX1009 at 3:11-56 (describing Clegg functionality taking place within PHY layer). A POSITA would understand that substituting Clegg's PHY-layer carrier-selection techniques into OMMA would not improve OMMA's RAT-selection functionality because the

two mechanisms operate at different protocol layers and make different types of decisions. *See* EX2017, ¶¶114-118; *Medtronic, Inc. v. Teleflex Innovations S.à.r.l.*, 69 F.4th 1341, 1351 (Fed. Cir. 2023) (where combination does not "achieve the same end[]" as the claimed invention, Board correct to find no motivation to combine, and a contrary finding would be "a recipe . . . ripe for hindsight abuse").

IV. CONCLUSION

The Petition does not establish that any of the challenged claims are unpatentable. Patent Owner's claims should be confirmed.

Dated: August 25, 2026

Respectfully Submitted,

/s/*Cyrus M. Morton*

Cyrus A. Morton
(Reg. No. 44,954)
CMorton@RobinsKaplan.com
Lead Counsel
Jessica L. Gutierrez
(Reg. No. 75,094)
Back-Up Counsel
Aaron R. Fahrenkrog
(*Pro hac vice*)
Back-Up Counsel
Robins Kaplan LLP
800 LaSalle Avenue, Suite 2800
Minneapolis, MN 55402
Phone: 612-349-8500
Fax: 612-339-4181

Attorneys for Patent Owner

WORD-COUNT CERTIFICATE

The undersigned certifies that the foregoing Patent Owner Response complies with the type-volume limitation of 37 C.F.R. § 42.24(c)(4) and contains 4,749 words in 14-point Times New Roman font as calculated by the word count feature of Microsoft Office. This word count is inclusive of all text and footnotes but does not include the table of contents, table of authorities, certificates or service or word count, or appendix of exhibits or claim listing.

Dated: August 25, 2026

/s/*Cyrus M. Morton*

Cyrus A. Morton
(Registration No. 44,954)
CMorton@RobinsKaplan.com
Robins Kaplan LLP
800 LaSalle Avenue, Suite 2800
Minneapolis, MN 55402
Phone: 612-349-8500
Fax: 612-339-4181

Attorney for Patent Owner

CERTIFICATE OF SERVICE

The undersigned certifies that the foregoing Patent Owner Response was served on August 25, 2026, by electronic mail to Petitioners' counsel at the following addresses indicated in Petitioners' Mandatory Notices:

James M. Glass
jimglass@quinnemanuel.com

Patrick T. Schmidt
patrickschmidt@quinnemanuel.com

Benjamin Kleinman
benjaminkleinman@quinnemanuel.com

Quincy Lu
quincylu@quinnemanuel.com

Dated: August 25, 2026

/s/*Cyrus M. Morton*

Cyrus A. Morton
(Registration No. 44,954)
CMorton@RobinsKaplan.com
Robins Kaplan LLP
800 LaSalle Avenue, Suite 2800
Minneapolis, MN 55402
Phone: 612-349-8500
Fax: 612-339-4181

Attorney for Patent Owner