UNITED STATES PATENT AND TRADEMARK OFFICE

BEFORE THE PATENT TRIAL AND APPEAL BOARD

SAMSUNG ELECTRONICS CO., LTD., and

SAMSUNG ELECTRONICS AMERICA, INC.,

Petitioners,

v.

XIFI NETWORKS R&D, INC.,

Patent Owner.

Case IPR2025-01207

Patent 12,015,933

PATENT OWNER'S PRELIMINARY RESPONSE UNDER 35 U.S.C. § 313 AND 37 C.F.R. § 42.107

Table of Contents

Page(s)

I. PRELIMINARY STATEMENT 1

II. FACTUAL BACKGROUND OF THE '933 PATENT 2

III. CLAIM CONSTRUCTION 7

IV. LEVEL OF ORDINARY SKILL IN THE ART 7

V. THE PETITION DOES NOT ESTABLISH A REASONABLE LIKELIHOOD THAT THE APPLIED REFERENCES RENDER THE CHALLENGED CLAIMS UNPATENTABLE. 8

A. The Petition Does Not Establish a Reasonable Likelihood that Chincholi Discloses Limitations Common to All Challenged Claims. 9

1. Chincholi does not disclose a "virtual MAC interface." 9

a. The Petition fails to show that Chincholi discloses a "virtual" MAC interface. 11

b. The Petition's functional equivalents arguments are legally inappropriate and factually incorrect. 14

2. Chincholi does not disclose a "processing interface configured to" perform claimed functions "in a manner transparent to any layer of the wireless networking devices." 19

3. Chincholi does not disclose utilization of a portion of transceiver bandwidth by one wireless networking device that "does not prevent" another wireless networking device from using remaining bandwidth. 23

4. Chincholi does not disclose transmission of a data stream "without requiring disassociation of the recipient from … MAC and PHY interfaces." 28

5. The enumerated failures of Chincholi are not exhaustive. 31

B. The Petition Does Not Establish a Reasonable Likelihood that Chincholi in View of Riggert and/or Clegg Renders Any Challenged Claim Unpatentable 32

1. The Petition Does Not Establish that a POSITA Would Have Either a Reason to Combine Chincholi and Riggert or an Expectation of Success from the Combination. 33

2. The Petition Does Not Establish that a POSITA Would Have Either a Reason to Combine Chincholi/Riggert and Clegg or an Expectation of Success from the Combination. 38

VI. CONCLUSION.....42

Table of Authorities

Page(s)

Cases

Application of Ruff,
256 F.2d 590 (C.C.P.A. 1958).....16

Application of Wilson,
312 F.2d 449 (C.C.P.A. 1963).....16

Corephotonics, Ltd. v. Apple Inc.,
84 F.4th 990 (Fed. Cir. 2023).....27-28, 30

Hamilton Beach Brands, Inc. v. f'real Foods, LLC,
908 F.3d 1328 (Fed. Cir. 2018).....37

In re Huai-Hung Kao,
639 F.3d 1057 (Fed. Cir. 2011).....16

In re Magnum Oil Tools Int'l, Ltd.,
829 F.3d 1364 (Fed. Cir. 2016).....25, 28, 30

Insite Vision Inc. v. Sandoz, Inc.,
783 F.3d 853 (Fed. Cir. 2015).....36

Kinik Co. v. Int'l Trade Comm'n.,
362 F.3d 1359 (Fed. Cir. 2004).....15

KSR Int'l Co. v. Teleflex Inc.,
550 U.S. 398 (2007).....31

Medtronic, Inc. v. Teleflex Innovations S.a.r.l.,
69 F.4th 1341 (Fed. Cir. 2023).....42

Meta Platforms, Inc. et. al. v. Eight kHz, LLC,
IPR2023-01023, Paper 10 (PTAB January 9, 2024).....36-37, 41

Nazomi Commc'ns, Inc. v. Arm Holdings, PLC,
403 F.3d 1364 (Fed. Cir. 2005).....15

Phillips v. AWH Corp.,
415 F.3d 1303 (Fed. Cir. 2005).....7

Polaris Indus., Inc. v. Arctic Cat, Inc.,
882 F.3d 1056 (Fed. Cir. 2018).....38, 39

Xerox Corp. v. Bytemark, Inc.,
IPR2022-00624, Paper 9 (PTAB Aug. 24, 2022) 28, 30

Rules

37 C.F.R. § 42.104 25

37 C.F.R. § 42.100(b) 7

Patent Owner Exhibit List

Exhibit No.	Description
EX2001	Complaint, *XiFi Networks R&D, Inc. v. Samsung Electronics Co., Ltd. and Samsung Electronics America, Inc.*, No. 2:24-cv-01057-JRG, Dkt. 1 (E.D. Tex. Dec. 17, 2024).
EX2002	First Amended Docket Control Order, *XiFi Networks R&D, Inc. v. Samsung Electronics Co., Ltd. and Samsung Electronics America, Inc.*, No. 2:24-cv-01057-JRG, Dkt. 28 (E.D. Tex. Apr. 14, 2025).
EX2003	Plaintiff's First Amended Complaint, *XiFi Networks R&D, Inc. v. Samsung Electronics Co., Ltd. and Samsung Electronics America, Inc.*, No. 2:24-cv-01057-JRG, Dkt. 13 (E.D. Tex. Mar. 11, 2025).
EX2004	Defendants' Answer and Affirmative Defenses to Plaintiff's First Amended Complaint, *XiFi Networks R&D, Inc. v. Samsung Electronics Co., Ltd. and Samsung Electronics America, Inc.*, No. 2:24-cv-01057-JRG, Dkt. 31 (E.D. Tex. Jun. 9, 2025).
EX2005	Defendants' P.R 3.3 and 3.4 Invalidity Contentions (Jun. 18, 2025).
EX2006	Table 1 Comparing Select Sections of Almeroth Declaration to Corresponding Sections of Petition (EX1002).
EX2007	Table 2 comparing common typographic errors(s) between petition and the Almeroth Declaration (EX1002).
EX2008	Declaration of Dr. Robert Akl, D.Sc.
EX2009	American Heritage Dictionary (5th Ed., 2012).
EX2010	Andrew S. Tanenbaum, *Computer Networks* (5th Ed., 2011).
EX2011	U.S. Patent No. 8,078,208
EX2012	U.S. Patent No. 9,560,656

Exhibit No.	Description
EX2013	Curriculum Vitae of Dr. Robert Akl, D.Sc.

I. PRELIMINARY STATEMENT

Pursuant to 37 C.F.R. § 42.107, Patent Owner XiFi Networks R&D, Inc. ("XiFi") submits this Preliminary Response to the Petition for *Inter Partes* Review ("IPR") of U.S. Patent No. 12,015,933 (the "'933 patent"). Paper 3 ("Petition"). Petitioners Samsung Electronics Co., Ltd. and Samsung Electronics America, Inc. (collectively, "Petitioners") challenge the validity of claims 1-30 of the '933 patent on the grounds that these claims are obvious, in violation of 35 U.S.C. § 103, in light of a combination consisting of: International Application WO 2013/126859 ("Chincholi") (EX1005); U.S. Patent App. Pub. No. 2011/0320625 ("Riggert") (EX1006); and U.S. Patent No. 9,055,592 ("Clegg") (EX1009), collectively, "Ground 1."

The Petition has not established a reasonable likelihood that any of the challenged claims are unpatentable. Although Petitioners acknowledge their burden to demonstrate the presence of every element of the claims in the asserted combination, their offer of proof as to several key elements and limitations falls far short. As foreshadowed in Patent Owner's memorandum in support of discretionary denial (Paper 8), in these key areas, the Petition relies less upon the actual disclosures of the references that comprise Ground 1, and more upon interpretation and gap-filling from Petitioners' designated expert, Kevin Almeroth, Ph.D. Ultimately, as

discussed below and confirmed in the Declaration of Robert Akl, D.Sc.—who worked as a POSITA in the field at the time of the inventions—the combination asserted in the Petition does not disclose all of the limitations of the challenged claims. In addition, the Petition does not account for technical details of the secondary references that either teach away from combining each one with the primary reference, Chincholi, and/or make combination impractical without extensive modification. Accordingly, Patent Owner requests that the Board deny institution of *inter partes* review.

II. FACTUAL BACKGROUND OF THE '933 PATENT

The '933 patent was filed as U.S. Pat. App. No. 18/594,375 on March 4, 2024, and claims priority to provisional applications Nos. 61/897,216 and 61/897,219, both filed on October 30, 2013. The title of the '933 patent is "Method and Apparatus for Processing Bandwidth Intensive Data Streams Using Virtual Media Access Control and Physical Layers." Consistent with that title, the inventions claimed in the '933 patent provide improved intelligent resource allocation and bandwidth utilization within wireless network systems by using virtual MAC and PHY layer interfaces. EX1001, Abstract, 2:48-55, 2:63-3:3, 4:30-5:30, Figs. 1-3. Key aspects of the invention of the '933 patent include the use of virtual MAC and PHY interfaces to facilitate transparent bandwidth decision making, obscuring the addresses and operation of the actual MAC and PHY layers to the upper layers, as well as allowing

a single transceiver's bandwidth to be shared among two separate users simultaneously. EX1001, Abstract, Fig. 1.

An illustrative embodiment of the architecture claimed in the '933 patent is depicted in Figure 1, which shows a wireless networking system 100:

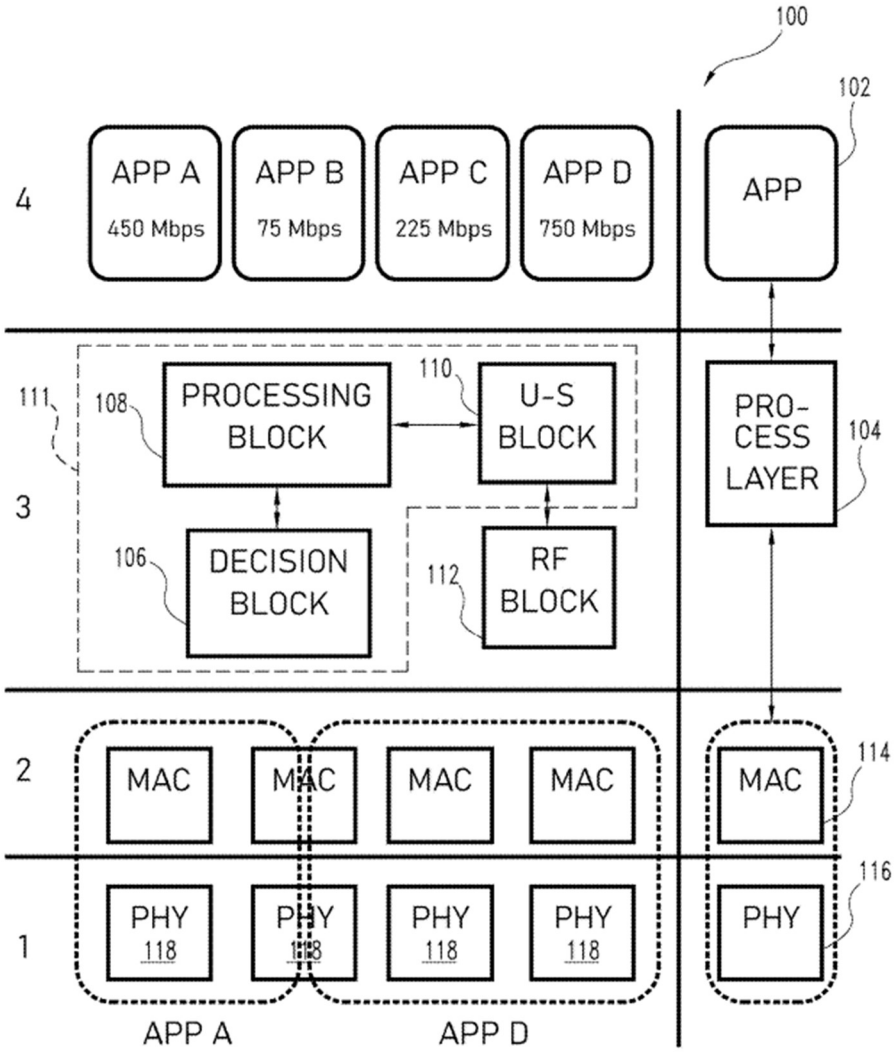

EX1001, Fig. 1.

An exemplary virtual MAC layer, as referenced in the title, is depicted as element 111. *Id.* at 3:49-50. The virtual PHY layer referenced in the title is depicted

as an RF block 112. *Id.* at 3:51. Figure 1 also shows that the system includes various applications (102) with respective data needs. *Id.* at 3:19-21. It also includes a plurality of wireless transceivers which have associated pairs of actual MAC and actual PHY components (118). *Id.* at 3:61-67. The actual MAC/PHY pairs recited by the claims send feedback information to an individual virtual PHY interface. *Id.* at 12:29-36.

The virtual MAC and virtual PHY layers are also known as interfaces. The virtual MAC interface, with bandwidth availability feedback from the virtual PHY interface, manages signals from the applications regarding sending or receiving data, and determines which resources in the wireless transceiver(s) will be used to respond to the applications. *Id.* at 4:30-60. The virtual MAC interface, with feedback from the virtual PHY interfaces, provides the point of contact in these communications between the applications and the transceiver(s). *Id.*

The Petition challenges all 30 claims of the ’933 patent: 1 independent claim (claim 1) and 29 dependent claims (claims 2-30). Claim 1 of the ’933 patent recites:

[1.pre] A method of improving the performance of circuitry, comprising the steps of:

[1.a] providing a processing interface that is adapted to be connected to an application interface of a wireless networking device, the application interface being associated with a first application, the first application

providing, after the circuitry has been connected to the application interface and when the wireless networking device is being used, a first data stream and having a first wireless bandwidth requirement;

[1.b] connecting first and second actual MAC interfaces to the processing interface;

[1.c] connecting first and second actual PHY interfaces respectively to the first and second actual MAC interfaces;

[1.d] respectively associating first and second wireless transceivers with the first and second actual PHY interfaces, wherein each of the first and second wireless transceivers is suitable for use in a wireless local area network, and the first and second wireless transceivers, respectively, (i) have a first and second bandwidth availability up to first and second actual bandwidths, and (ii) are adapted to emit radio signals in first and second different bands of frequencies;

[1.e] forming in the processing interface (i) at least one virtual MAC interface and (ii) first and second virtual PHY interfaces that, after the circuitry has been connected to the application interface and during operation of the wireless networking device, feed information regarding the bandwidth availabilities of the first and second wireless transceivers back to the at least one virtual MAC interface;

[1.f] wherein the processing interface is configured to, after the circuitry has been connected to the application interface and when the wireless networking device is being used, and in a manner transparent to any layer of the wireless networking device above the processing interface,

[1.g] (a) request or create (i) a first association between a recipient and the first actual MAC and PHY interfaces and (ii) a second association between the recipient and the second actual MAC and PHY interfaces,

[1.h] (b) identify at least one first portion of the first actual bandwidth of the first wireless transceiver, the identified at least one first portion comprising a set of given resources,

[1.i] (c) evaluate whether any of the given resources of the first identified actual bandwidth portion are unavailable for communication, and

[1.j] (d) use the first wireless transceiver to transmit the first data stream to the recipient, without requiring disassociation of the recipient from either or both of the first and second actual MAC and PHY interfaces, using a subset of frequencies corresponding to only the given resources of the first bandwidth portion that are not unavailable for communication to thereby at least partially satisfy the first wireless bandwidth requirement of the first application; and

[1.k] wherein, after the circuitry has been connected to the application interface and when the wireless networking device is being used, the wireless networking device's utilization of the first available bandwidth portion of the first wireless transceiver does not prevent any wireless networking device devices from utilizing a range of frequencies corresponding to the remaining portion of the bandwidth availability of the first wireless transceiver for data transmission or reception purposes at the same time that the first bandwidth portion is being used for data transmission purposes.

Ex. 1001, 12:6-13:6.

III. CLAIM CONSTRUCTION

Petitioners do not request construction of any claim terms from the ’933 patent. Pet. at 9. Patent Owner does not believe that any claim terms require express construction to deny institution. Accordingly, the claims should be given their ordinary and customary meaning in light of the specification and prosecution history, as understood by a person of ordinary skill in the art. 37 C.F.R. § 42.100(b); *Phillips v. AWH Corp*., 415 F.3d 1303 (Fed. Cir. 2005).

IV. LEVEL OF ORDINARY SKILL IN THE ART

For the purposes of these preliminary proceedings, Patent Owner does not dispute Petitioners’ recitation of the ***level*** of skill for a person of ordinary skill in the art (“POSITA”). Patent Owner does not necessarily agree, however, with the

statements made in the Petition and the accompanying declaration of Dr. Almeroth as to what a POSITA would have known and/or found "straightforward." Patent Owner also does not waive any argument regarding the proper level of skill and further reserves the right to later advance additional arguments.

V. THE PETITION DOES NOT ESTABLISH A REASONABLE LIKELIHOOD THAT THE APPLIED REFERENCES RENDER THE CHALLENGED CLAIMS UNPATENTABLE.

The Petition does not establish a reasonable likelihood that Chincholi in combination with Riggert and Clegg (Ground 1) discloses all of the limitations of any '933 patent claim, or that a POSITA would be motivated to combine the references. The Board should not institute trial for many reasons including, but not limited to:

A. Chincholi does not disclose the claimed "virtual MAC interface" or virtual PHY interface." *See* Section V.A.1.

B. Chincholi does not disclose the claimed "processing interface" acting "in a manner transparent to any layer of the wireless networking device above the processing interface." *See* Section V.A.2.

C. Chincholi does not disclose the claimed utilization of a "bandwidth portion of" a transceiver that "does not prevent any wireless networking device … from utilizing … the remaining portion of bandwidth availability." *See* Section V.A.3.

D. Chincholi does not disclose the claimed use of a "wireless transceiver to transmit the first data stream to the recipient, without requiring disassociation of the recipient from … MAC and PHY interfaces…" *See* Section V.A.4.

E. The Petition does not establish a reasonable likelihood of establishing that a POSITA would have modified Chincholi with either Riggert or Clegg. *See* Section V.B.

The Board should not institute trial at least for these reasons.

A. The Petition Does Not Establish a Reasonable Likelihood that Chincholi Discloses Limitations Common to All Challenged Claims.

The Petition has not demonstrated a reasonable likelihood of success that Petitioners will prevail on any claim challenged in Ground 1 because the primary reference, Chincholi (EX1005), lacks a number of independent claim 1's limitations and the Petition makes no attempt to argue any other reference discloses these limitations. All other claims depend from claim 1, either directly or indirectly, and therefore, the Petition has also failed to demonstrate that Chincholi in combination with Riggert and/or Clegg discloses any challenged claim.

1. Chincholi does not disclose a "virtual MAC interface."

The Petition has not established a reasonable likelihood that Chincholi discloses "a virtual MAC interface." *See* Pet. at 28-30.

Independent claim 1 (from which all other challenged claims depend) recites that the processing interface includes a virtual MAC interface and first and second virtual PHY interfaces.[1] EX1001, 12:29-31.

The Petition asserts that Chincholi's OMMA layer "includes the claimed 'virtual MAC interface,'" because it "aggregates multiple MAC interfaces," and "because it transparently 'distributes and/or combines' packets between the IP layer and the RATs." Pet. at 28. The Petition's arguments, however, fail to demonstrate disclosure of a "virtual MAC interface": first, because nothing in Chincholi is "virtual"; and second, because the Petition's functional comparison—even were this an appropriate means of demonstrating invalidity—fails to actually show alike functions.

[1] The Petition makes no attempt to argue that Chincholi discloses a virtual PHY interface; instead, it assigns that essential claim element to the secondary reference Riggert. *See* Pet. at 30-34; *see also* EX2008 (Akl), ¶62. But as explained in Section V.B.1, Riggert does not disclose a virtual PHY interface as described and claimed in the '933 patent, and a POSITA would have no motivation to combine Chincholi with Riggert.

a. The Petition fails to show that Chincholi discloses a "virtual" MAC interface.

The Board should deny institution because the Petition does not address why Chincholi teaches the "virtual" limitation. The Petition stops one step short of claiming Chincholi's OMMA layer ***is*** a virtual MAC interface, preferring to argue that it is "***acting as*** a virtual MAC interface." *Id.* at 28 (emphasis added). This is wrong for several reasons—most glaringly, because Chincholi does not disclose a ***virtual*** MAC interface at all. Indeed, Chincholi does not once contain the word "virtual" in its lengthy disclosure. *See generally* EX1005; *see also* EX2008 (Akl), ¶49. Nor does the Petition or Dr. Almeroth attempt to define "virtual," or explain why aggregation, distribution, or combination of packets between the IP layer and the RATs of Chincholi would meet an accepted definition of "virtual." *See* Pet. at 27-30; EX1002, ¶¶103-106. By declining to point to any reasonable definition of what it means to be "virtual," the Petition avoids committing to an objective basis for assessing its argument.

In fact, "virtual" had a well-known plain and ordinary meaning at the time of the '933 patent's invention: that which is not physical or tied to the physical world, but rather software-based, abstract, or logical. EX2008 (Akl), ¶50; *see also* EX2009 (2012 American Heritage Dictionary) ("virtual" means "[c]reated, simulated, or carried on by means of a computer or computer network" and "[e]xisting … not in

actual fact or form"). Likewise, a "virtual MAC address" or a "virtual MAC interface" is a software or logical construct that has an address that can be changed, and which need not be static. EX2008 (Akl), ¶50. In contrast, and in the context of the '933 patent, a POSITA would understand that the "actual" MAC interface is one whose address is permanent and installed by the manufacturer, i.e., physical. *See* EX2008 (Akl), ¶51 (quoting EX2010 (Tanenbaum) at 339 ("MAC addresses are installed by the manufacturer and guaranteed to be unique worldwide…")).

Because the virtual MAC interface sits between the actual MAC interface and higher layers, such as applications, a POSITA would understand that the virtual MAC interface obscures the actual MAC interface's address from higher layers via its programmable, non-static—virtual—address. *Id.*; *see also* EX2011 (U.S. Patent No. 8,078,208) at 6:39-40 ("A single virtual MAC address 311 hides the MAC addresses of the several NICs …"); *see also id.* at Abstract (invention contains a "virtual layer that hides the multiple physical network interfaces from higher layers of a node's network protocol stack"). Packets are passed up the protocol stack from the virtual MAC interface with the virtual MAC address in the payload. EX2008 (Akl), ¶52.

Nothing in Chincholi describes or suggests a "virtual" MAC interface, properly understood. *Id.*, ¶¶53-54. Indeed, although a virtual MAC interface would have a programmed or non-static address, Chincholi's OMMA is not disclosed as

being a separately addressable entity at all; it merely acts as a conduit to pass on packets received from different RATs (each with its own actual MAC address), taking multiple inputs and sending them out as one output. EX1005 at [0137]-[0143], [0383]; EX2008 (Akl), ¶53.[2] In doing so, Chincholli's OMMA sends aggregated packets to the IP layer with the payload of each packet containing the actual MAC address of the RAT from where it originated. EX2008 (Akl), ¶54; EX1005, [205] (OMMA layer uses "device address").

In contrast, in the '933 patent, packets are addressed using the virtual MAC address; upper layers do not see the actual MAC addresses. *See* EX1001, 4:46-49; EX2008 (Akl), ¶55. This enables a number of recited functions and limitations discussed below in Sections V.A.2, V.A.3 and V.A.4. Ultimately, nothing in the four corners of Chincholi purports to characterize the OMMA as "virtual"; consequently, the Petition's attempt to map Chincholi's OMMA onto the '933

[2] In this regard, Chincholi is no more pertinent than the art of record, such as U.S. Patent No. 9,560,656 to Damnjanovic ("'656 patent," EX2012). The '656 patent uses a module called a "DL Multi-link Scheduler," which, along with a "DL WLAN Flow Control," operates above the MAC layer, like Chincholi's OMMA, to distribute packets based on quality-of-service considerations and system fairness. EX2012 ('656 patent), 12:67-13:16.

patent's virtual MAC interface fails because it ignores the requirement that the interface be, in fact, "virtual."

b. The Petition's functional equivalents arguments are legally inappropriate and factually incorrect.

Instead of demonstrating that the OMMA layer fits the definition of a "virtual" MAC interface, the Petition resorts to equivalents-type arguments. First, the Petition asserts that the OMMA layer "includes an interface ***acting as*** a virtual MAC interface" because the OMMA layer "aggregates multiple MAC interfaces" and "'distributes and/or combines' packets between the IP layer and the RATs." Pet. at 28; EX1002, ¶104 (emphasis added). But "acting as" a virtual MAC interface does not amount to ***being*** a virtual MAC interface—which would involve the upper layers interacting with an interface with a non-physical address.

Next, Dr. Almeroth, Petitioners' expert, opines that a POSITA would have recognized that the OMMA "'virtualizes' a MAC interface, because the OMMA would effectively appear to the IP layer as a single interface for exchanging packets are ultimately sent or received by the actual MAC-PHY pairs." Pet. at 28-29 (quoting EX1002, ¶104). Dr. Almeroth gives no further explanation in his declaration than the identical text contained in the Petition. He does not explain what "virtualizing" is, why it is equivalent to "virtual," or why a POSITA would understand Chincholi's OMMA layer as being "virtual."

The most that the Petition and Dr. Almeroth can do is reduce the term "virtual MAC interface" to some of its illustrative or exemplary functions and components—namely, modules referred to in the Figure 1 embodiment of the '933 patent as the "decision," "processing," and "ultra-streaming" blocks. Pet. at 27-28; EX1002, ¶103. The Petition and Dr. Almeroth presume that if they can match the functions in the modules of Chincholi with the blocks within the Figure 1 embodiment of the virtual MAC interface, they can show equivalence.[3] But this approach is improper for multiple reasons.

[3] The Petition conflates the virtual MAC interface of claim 1 with certain aspects of the particular embodiment described in the specification with regard to Figure 1. Claim 1 is not limited to the Figure 1 embodiment, as demonstrated by the fact that each of dependent claims 4-6 claim one of the three blocks the Petition identifies. *See Kinik Co. v. Int'l Trade Comm'n.*, 362 F.3d 1359, 1364 (Fed. Cir. 2004) ("[W]hen the specification describes the invention in broad terms, accompanied by specific examples or embodiments, the claims are generally not restricted to the specific examples or the preferred embodiments unless that scope was limited during prosecution."); *Nazomi Commc'ns, Inc. v. Arm Holdings, PLC*, 403 F.3d 1364, 1370 (Fed. Cir. 2005) ("[L]imitations stated in dependent claims are not to be read into the independent claim from which they depend.").

First, this type of functional analysis is not a substitute for identifying a literal virtual MAC interface. Including some of the same functionality does not mean that the OMMA layer ***is*** a "virtual MAC interface." Both the sun and a pot on a stove will melt ice; that does not mean the pot on a stove is the sun. *Application of Wilson*, 312 F.2d 449, 451 (C.C.P.A. 1963) ("The mere production of the same end result is not determinative of the obviousness of structure and does not support the board's conclusion of unpatentability."); *Application of Ruff*, 256 F.2d 590, 597 (C.C.P.A. 1958) ("That two things are actually equivalents, in the sense that they will both perform the same function, it not enough to bring into play the rule that when one of them is in the prior art the use of the other is obvious and cannot give rise to patentable invention. One need not think very hard to appreciate that the vast majority of patentable inventions perform old functions."); *cf. In re Huai-Hung Kao*, 639 F.3d 1057, 1067 (Fed. Cir. 2011) (substitution of one component for another without reasoning cannot support obviousness finding); MPEP § 2144.06 ("In order to rely on equivalence as a rationale supporting an obviousness rejection, the equivalency must be recognized in the prior art….").

Second, even were it appropriate to compare Chincholi to the Figure 1 embodiment of the virtual MAC interface, Chincholi is missing important functionality, and the Petition's functional comparison fails. For example, the virtual MAC interface of the '933 patent controls the operation and bandwidth

allocation decisions with respect to the actual MAC layers below it. EX1001, 2:65-3:3, 3:28-50, 10:35-39; EX2008 (Akl), ¶57. In contrast, Chincholi states that the OMMA layer is merely a "mechanism to aggregate two or more RATs ***operating independently*** on two or more bands to enhance the total IP throughput of the link." EX1005, [0120] (emphasis added). Clearly, Chincholi's "two or more RATs"—"operating independently"— ***are not*** directed by the OMMA layer, while the actual MAC interfaces of the '933 patent ***are*** directed by the virtual MAC interface. EX2008 (Akl), ¶57.

Further, the Petition asserts that certain modules within Chincholi's OMMA layer—the traffic shaping module 601, the MAC resource reservation module 602, and the IP QoS Scheduler module 603— include "all of the functionality the ['933] patent associates with the 'virtual MAC interface.'" Pet. at 29 (citing EX1005, [0139]). But the Petition is wrong on the substance of its module-to-block comparisons. For example, the Petition asserts that Chincholi's IP QoS Scheduler equates to the '933 patent's decision block. Pet. at 29-30; EX1002, ¶106; EX1005, [0143]. But the IP QoS Scheduler "may segregate a single IP packet stream comprising multiple IP QoS types into distinct IP QoS streams." EX1005, [0143]. It does not "determine the size and type of data being received," nor does it determine the "type of processing necessary to put the stream in a format where it is capable of being transmitted"—the functions of the decision block. EX1001, 3:31-34; EX2008

(Akl), ¶59. The Petition and Dr. Almeroth make no attempt to describe why these functions are equivalent—because they are not equivalent. EX2008 (Akl), ¶59.

Similarly, the MAC resource reservation module "determine[s] an amount of time duration" for packet transmission. EX1005, [0142]. Despite the Petition's argument (Pet. at 30; EX1002, ¶106), this is not the same as the processing block of the '933 patent, which "processes the data stream as determined by the decision block" in order "to put the stream in a format where it is capable of being transmitted." EX1001, 3:31-36; EX2008 (Akl), ¶60. Again, the Petition provides no explanation for why these two functions—one dealing with time, and one dealing with format for transmission—are remotely equivalent. And indeed, a POSITA would not understand them to be the same. EX2008 (Akl), ¶60.

Finally, the Petition attempts to equate the traffic shaping module of Chincholi with the ultra-streaming block of the '933 patent. Pet. at 30; EX1002, ¶106. Chincholi's traffic shaping module "may determine the way a packet is routed using policy based routing or feedback based routing." EX1005, [0139]-[0141]. Meanwhile, the '933 patent's ultra-streaming block "manages the processing of signal streams or sub-streams given the available resources (memory, processing speed, number of available radios, etc.) and packetizes sufficiently processed streams or sub-streams." EX1001, 3:36-48. The Petition does not and cannot explain how the traffic shaping module of Chincholi performs packetizing. EX2008 (Akl),

¶61. In short, even if it were enough to point to similar functionality, none of the modules in Chincholi's OMMA layer that the Petition identifies do the same things as the three blocks of the Figure 1 embodiment of the '933 patent to which the Petition compares them.

In all, the OMMA layer of Chincholi is missing both the form and function of the virtual MAC interface of the '933 patent. First, the OMMA layer is not virtual—there is nothing in Chincholi—nor in the Petition or accompanying papers—that describes what about the OMMA layer involves hiding a physical address behind a virtual interface. Second, the OMMA layer and its modules do not perform the functions that the Figure 1 virtual MAC interface performs. And even if functional equivalence were sufficient, a POSITA would not understand the OMMA layer of Chincholi to disclose the Figure 1 embodiment of virtual MAC interface. EX2008 (Akl), ¶¶56, 58.

2. Chincholi does not disclose a "processing interface configured to" perform claimed functions "in a manner transparent to any layer of the wireless networking devices."

The Petition has not established a reasonable likelihood that Chincholi discloses a "processing interface configured to" perform claimed functions "in a manner transparent to any layer of the wireless networking devices." *See* Pet. at 34-35.

The claims of the ’933 patent recite a “processing interface.” The processing interface is introduced in claim 1, where it is described as: containing “at least one virtual MAC interface”; and configured to perform four functions. EX1001, 12:29-62. While additional functions for the processing interface are claimed in dependent claims 14, 16, 17, 18, 19, 21, 23, 25, 29 and 30, all claims include the four recited in claim 1, which generally include: the creation of associations between the recipient and the recited actual MAC and PHY interfaces (claim 1[g]); identifying a portion of the bandwidth of the first wireless transceiver (claim 1[h]); evaluating whether that portion is unavailable for communication (claim 1[i]); and then using that portion that is not unavailable to transmit the recited data stream to the recipient (claim 1[j]).[4]

In each of these instances, the prescribed functions are recited as being performed “in a manner transparent to any layer of the wireless networking device above the processing interface.” EX1001, 12:40-41. The Petition attempts to demonstrate that Chincholi discloses these transparent operations by pointing to a mode in Chincholi disclosed as being transparent. Chincholi’s transparent mode is disclosed in a single sentence and described as one in which “the OMMA layer may

[4] These claimed functions are described generally for context/identification and are not intended as a substitute for the entirety of the claim language.

be transparent in that it distributes and/or combines packets from different RATs and forward the packets to the IP layer" without the inclusion of an additional header. EX1005, [0126], [0192]; *see* Pet. at 34-35; EX1002, ¶114.

Chincholi's transparent mode makes no reference to the specific four functions claimed in the '933 patent as being performed transparently. Moreover, the Petition does not explain how a "POSITA would have recognized" that this sparse disclosure of Chincholi's "transparent mode" corresponds to the four functions claimed in the '933 patent. Pet. at 34-44; EX1002, ¶¶115-138. This is insufficient to demonstrate that the four functions (claims 1[g]-1[j]) are in fact performed transparently.

Importantly, the Petition misses the crux of limitation 1[f] and a fundamental point of the invention of the '933 patent: it is based upon the use of virtual MAC interface, with bandwidth availability feedback provided by the virtual PHY interfaces, to facilitate transparent bandwidth decision making, obscuring the addresses and operation of the actual MAC and PHY layers to the upper layers. EX1001, Abstract; EX2008 (Akl), ¶64. Indeed, through the functioning of the virtual MAC layer, the higher layers receive the information that they are interacting with only one MAC/PHY pair—the virtual MAC interface—rather than the many actual MAC/PHY pairs below the virtual MAC interface. EX1001, Fig. 1; EX2008 (Akl), ¶64.

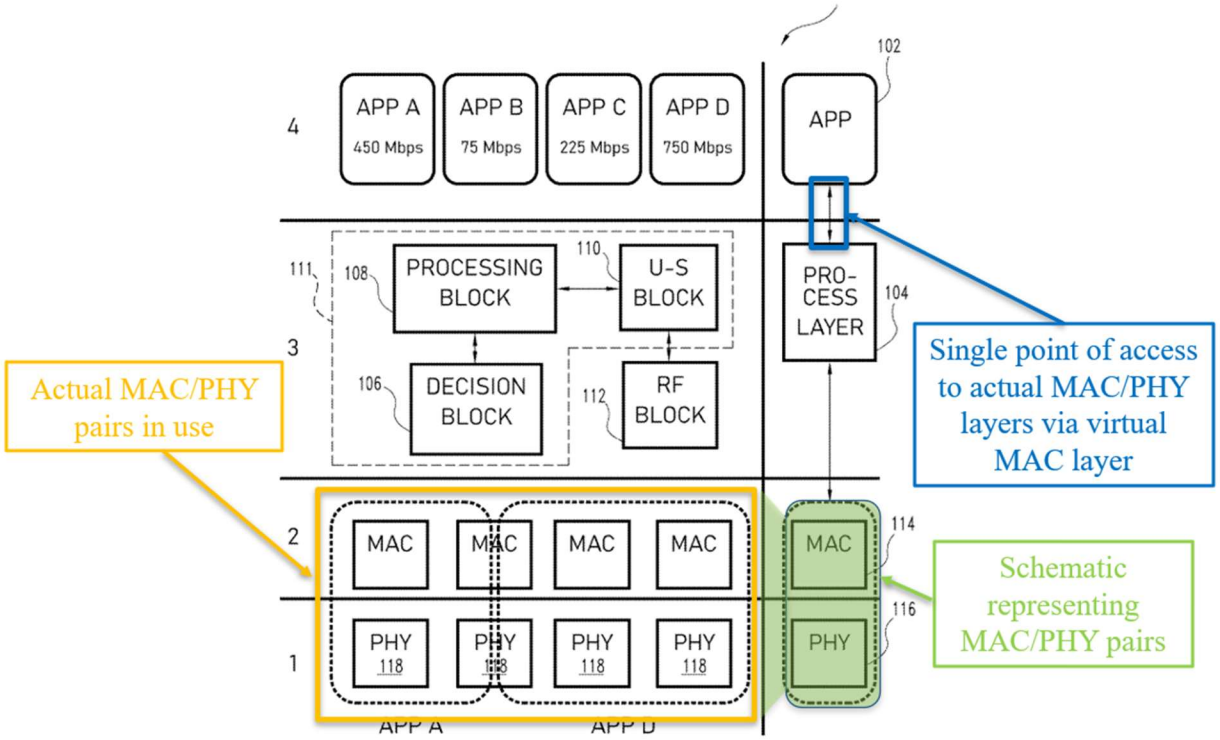

EX1001, Fig. 1 (annotations added); EX2008 (Akl), ¶64; *see also* EX2011 ('208 patent) at Abstract, 6:39-40.

This particular manner of achieving transparency—through the use of the virtual MAC interface—is incorporated into the claim limitations reciting the four functions that must be performed by the processing interface "in a manner transparent to any layer of the wireless networking device above the processing interface." EX1001, 12:37-62; EX2008 (Akl), ¶65. That is because the "processing interface" itself must contain the virtual MAC interface and virtual PHY interfaces as claimed in limitation 1[e]—which is the same processing interface of claim limitations 1[f]-1[j] that must act in a manner transparent to the layers above. EX2008 (Akl), ¶65. Therefore, regardless of whether Chincholi discloses

transparency in some respect, it does not disclose transparency achieved by the processing interface of the ’933 patent. *See* Section V.A.1; EX2008 (Akl), ¶65. This is what is claimed and what is required.

The Petition, by asserting Chincholi discloses transparency generally when what is required is transparency by a processing interface that includes a virtual MAC interface (and which indeed achieves transparency by that virtual MAC interface), fails to demonstrate a reasonable likelihood any claim is unpatentable. Because the Petition makes no attempt to show that Chincholi discloses the processing interface of the ’933 patent and its claimed transparent functions, Petitioners have failed to meet their burden, and institution should be denied.

3. Chincholi does not disclose utilization of a portion of transceiver bandwidth by one wireless networking device that “does not prevent” another wireless networking device from using remaining bandwidth.

The Petition has not established a reasonable likelihood that Chincholi discloses utilization of a portion of transceiver bandwidth by a first wireless networking device that “does not prevent” another wireless networking device from using remaining bandwidth unused by the first wireless networking device. *See* Pet. at 44-46.

Claim 1 of the ’933 patent provides that a first device’s utilization of the first available bandwidth portion of the recited transceiver “does not prevent” any other

device from using the remaining portions of the that first available bandwidth portion at the same time. EX1001, 12:63-13:6; *see also id.* at 15:3-12 (claim 18). This functionality is depicted in Figure 1, where App A and App D are shown sharing the use of the second MAC/PHY pair:

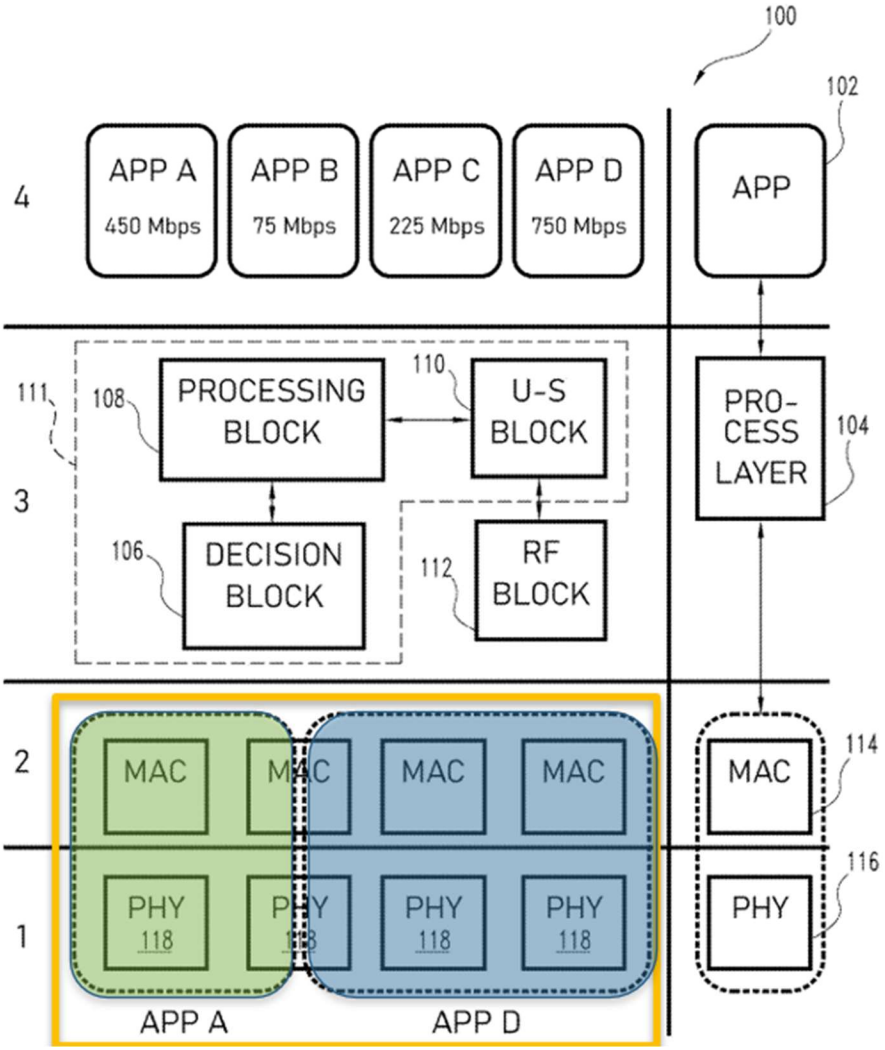

EX1001, Fig. 1 (annotations added). This ability to share a single transceiver's bandwidth among two separate users denoted by the use of different applications is a key benefit of the invention. EX2008 (Akl), ¶67.

In attempting to match this limitation, the Petition relies upon Chincholi's disclosure of "***multi-WTRU*** multi-IP flow cases," where packets are queued and distributed in an optimized manner. Pet. at 44-45 (citing EX1005, [0328], [0352]). But a system comprising multiple WTRUs and where packets are queued and distributed sequentially is not necessarily a system where a single transceiver's resources are shared simultaneously. EX2008 (Akl), ¶68.

Indeed, the Petition and Dr. Almeroth identify no passage in Chincholi that expressly discloses the claimed functionality, i.e., having one portion of the transmitter's available bandwidth be used for one recipient/application at the same time another portion of that transmitter is used for another recipient/application. Nor has Dr. Almeroth pointed to such functionality in any other reference that is a part of Ground 1. For this reason, the Petition must fail. *See, e.g.*, 37 C.F.R. § 42.104 ("The petition must specify where each element of the claim is found in the prior art patents or printed publications relied upon."); *In re Magnum Oil Tools Int'l, Ltd.*, 829 F.3d 1364, 1380 (Fed. Cir. 2016) ("The petitioner must instead articulate specific reasoning, based on evidence of record, to support the legal conclusion of obviousness.").

In fact, Chincholi discloses the opposite of two WTRUs being able to use different portions of a bandwidth portion (*e.g.*, a channel in the 5 GHz Wi-Fi band) at the same time; in Chincholi's architecture, only one WTRU can access a channel

at a time. *See, e.g.*, EX1005, [0118]. For example, Chincholi explains that its WTRUs "may ***contend with each other***" for channel access if they share an operating frequency. EX1005, [0117] (emphasis added); *see also id.* [0130] ("WTRUs 315 operating on a particular spectral band may contend with each other for wireless medium access."); *id.* [0119] ("delay per channel may be high due to contention among WTRUs"). Thus, Chincholi makes clear that different WTRUs communicating in the same band "contend" for channel access, meaning the winner of the contention "locks out" the others from using that channel at the same time, and, therefore, the WTRUs do not share the channel bandwidth at the same time. EX2008 (Akl), ¶68.[5]

The Petition's only argument—and Dr. Almeroth's only opinion addressing this topic—relates to a technique known as Orthogonal Frequency Division Multiple Access ("OFDMA"). EX1002, ¶142. Dr. Almeroth notes that Chincholi's OMMA

[5] While Chincholi does disclose that "[a] WTRU may be able to communicate (e.g., simultaneously) with a NT over, for example, an ISM channel and a TVWS channel" (EX1005, [0117]), such capability exists only where the two WTRUs are using different bands. EX2008 (Akl), ¶69. This demonstrates that Chincholi does not teach sharing bandwidth at the transceiver—only "contending" for the transceiver, or operating on different bands and therefore not sharing. *Id.*

receives feedback information regarding the type of actual transceiver connected to its network. *Id.* One such type is identified as an OFDMA type transceiver. *Id.* The Petition's arguments fail at least for the reason that OFMDA feedback is not data transmission using the OFDMA technique.

Instead of basing his analysis on the actual disclosure of Chincholi, Dr. Almeroth claims that OFDMA was "a known wireless communication technique for dividing an available bandwidth into smaller subcarriers (*i.e.* frequency ranges) which are then allocated to different users." *Id.* Dr. Almeroth, however, does not cite to anything in Chincholi disclosing such operation; the cited passage refers only to feedback being given, not some form of transmission.

Moreover, Dr. Almeroth does not cite any background material demonstrating that the OFDMA technique included such functionality for wireless transceivers at the time of the invention. In fact, none of the standards cited in Chincholi—such as 802.11 a/b/g/n—implement OFDMA. EX1005, [0116]; EX2008 (Akl), ¶70. Moreover, none of the figures and related text in Chincholi discloses any details of variations from the then-existing standards to provide for implementing OFDMA in a Wi-Fi-only WTRU. EX2008 (Akl), ¶70.

The Petition thus rests upon a naked statement from an expert rather than the actual disclosure of any reference that is part of Ground 1. Consequently, it does not establish a reasonable likelihood of success. *See, e.g.*, *Corephotonics, Ltd. v. Apple*

Inc., 84 F.4th 990, 1004 (Fed. Cir. 2023) ("To satisfy its burden of proving obviousness, a petitioner cannot employ mere conclusory statements. The petition must instead articulate specific reasoning, based on evidence of record, to support the legal conclusion of obviousness."); *see also In re Magnum Oil Tools Int'l, Ltd.*, 829 F.3d at 1380 (Board may not base obviousness determination on conclusory statements without explanation); *Xerox Corp. v. Bytemark, Inc.*, IPR2022-00624, Paper 9 at 15-16 (PTAB Aug. 24, 2022) (precedential) (denying institution where petition relied on expert testimony to supply a claim limitation not found in the art).

4. Chincholi does not disclose transmission of a data stream "without requiring disassociation of the recipient from … MAC and PHY interfaces."

The Petition has not established a reasonable likelihood that Chincholi discloses transmission of a data stream "without requiring disassociation of the recipient from … MAC and PHY interfaces." *See* Pet. at 41-44.

Claim 1, and therefore all challenged claims, recites that the processing interface be configured to use the first wireless transceiver to transmit the data stream "without requiring disassociation of the recipient" from either or both of the first and second actual MAC and PHY interfaces. EX1001, 12:54-62. Dependent claims 14, 16, 17, 18, 19, 25, 29, and 30 each also expressly recite this limitation. *Id.*, 13:51-59, 14:9-17, 14:32-40, 14:55-15:2, 15:37-49, 16:40-51, 17:26-18:4, 18:20-29.

To transmit data over a network, there needs to be an association between the transmitter and receiver of the data. In prior art Wi-Fi networks, when a decision was made to switch from one transmitter/receiver operating on one band to a different transmitter/receiver on a different band, or from one channel in one band to different channel on that band, the current association had to be broken before a new association could be created. EX2008 (Akl), ¶72. This concept was known colloquially as "break before make," and was necessary to reduce the risk of interference. *Id.* However, such breaking can cause delay and latency as a new association is created. *Id.* The invention of the '933 patent avoids this because the virtual MAC interface provides a single, consistent MAC address for accessing the physical layer for which it is responsible. *Id.*, ¶73.

Chincholi does not deviate from the prior art norm of "break before make." In fact, Chincholi describes a "dynamic RAT switching mode" where "the OMMA layer 1300 may select the best RAT possible... and not use the remaining RATs." EX1005, [0154]. In such circumstance, a "RAT with the low channel quality may be ***disabled***." *Id.*, [0155] (emphasis added).

Where the description states that the OMMA layer "may select the best RAT possible … and not use the remaining RATs," a POSITA would understand that once a different RAT is chosen, the previous one is effectively released or disabled. EX2008 (Akl), ¶74. This is consistent with Chincholi's use of the word "disabled."

Id.; *see also* EX1005, [0155]. Further, in practice, a POSITA would understand that "disabling" means the OMMA layer is disassociating from the RAT at the MAC/PHY level. *Id.* Because the OMMA drops the undesired RAT and only then associates with the new one, it employs a conventional "break before make" methodology. *Id.* Therefore, rather than disclosing transmission of a data stream "without requiring disassociation of the recipient from … MAC and PHY interfaces," Chincholi discloses just the opposite.

Given this fundamental difference between Chincholi and the '933 inventions, it is not surprising that the Petition and Dr. Almeroth fail to identify any passage from Chincholi that shows deviation from a conventional "break before make" mode. Instead, the Petition and Dr. Almeroth merely state that "Chincholi also does not 'require' disassociation of recipient WTRUs from either or both of the actual MAC and PHY interfaces during operation." EX1002, ¶136; *see also* Pet. at 43 (citing EX1002, ¶136 and using the exact language therefrom). But this naked, citationless sentence, phrased in negative language, does not meet Petitioners' burden and cannot stand. *Corephotonics, Ltd.*, 84 F.4th at 1004; *In re Magnum Oil Tools Int'l, Ltd.*, 829 F.3d at 1380; *Xerox Corp.*, IPR2022-00624, Paper 9 at 15-16.

The Petition's failure to acknowledge that Chincholi employs "break before make" is especially stark given that the disclosure demonstrating "break before make"—regarding the disabling of undesired RATs—is quoted by Dr. Almeroth in

the context of a related patent. *See Samsung Electronics, Co. v. XiFi Networks R&D, Inc.*, IPR2025-01206, EX1002, ¶290 (quoting EX1005, [0154]-[0155]). Other sections of Chincholi also make clear that Chincholi only teaches a "break before make" system. *See* EX1005, [0207] (OMMA tracks "availability" of WTRUs for RATs which are "enabled at different times"); EX2008 (Akl), ¶74.

Because the Petition cannot rely on Chincholi for the "without disassociating" limitation, it resorts to secondary references Clegg and Riggert. Pet. at 42-44 (citing EX1002, ¶¶136-138). But, as explained below, a POSITA would have had no motivation to combine Chincholi with Clegg or Riggert, especially as they do not disclose maintaining associations. *See* Section V.B. Without disclosure in Chincholi and without a motivation to combine, the Petition has failed to demonstrate a reasonable likelihood of success regarding the "without disassociating" limitation. *See, e.g.*, *KSR Int'l Co. v. Teleflex Inc.*, 550 U.S. 398, 418 (2007) (holding obviousness analysis demands "demonstrating that each of its elements was, independently, known in the prior art" as well as "identify[ing] a reason that would have prompted a person of ordinary skill in the relevant field to combine the elements in the way the claimed new invention does.")

5. The enumerated failures of Chincholi are not exhaustive.

As described above, Chincholi fails to disclose at least four limitations of every challenged claim of the '933 patent. Therefore, the Petition fails to establish

a reasonable likelihood of success on the merits for at least these reasons. *See supra*, Sections V.A.2-5. Patent Owner reserves the right to raise additional arguments regarding the failure of disclosure in Chincholi as to claim 1 and its dependents.

B. The Petition Does Not Establish a Reasonable Likelihood that Chincholi in View of Riggert and/or Clegg Renders Any Challenged Claim Unpatentable.

In addition to failing to meet its burden to demonstrate the claim limitations described above in Section V.A, the Petition also fails to demonstrate that a POSITA would have been motivated to combine Chincholi with either Riggert or Clegg, or that a POSITA would have had a reasonable expectation of success in so doing. In assessing the asserted combinations, it bears emphasizing that Chincholi is the only reference relied on for the limitations reciting "virtual MAC interface" (Section V.A.1.), a "processing interface configured to" perform claimed functions "in a manner transparent to any layer of the wireless networking devices" (Section V.A.2), and utilization of a portion of transceiver bandwidth by one wireless networking device that "does not prevent" another wireless networking device from using remaining bandwidth (Section V.A.3). Neither of the secondary references is asserted to disclose these limitations. Consequently, the Petition fails based on Chincholi alone, without even reaching the asserted combinations or secondary references.

1. The Petition Does Not Establish that a POSITA Would Have Either a Reason to Combine Chincholi and Riggert or an Expectation of Success from the Combination.

The Petition does not establish a reasonable likelihood of establishing that a POSITA would have modified Chincholi with Riggert. The Petition contends that a POSITA would have been motivated to add Riggert's bondable virtual physical interface to Chincholi's OMMA layer to supply the missing "virtual PHY interface." Pet. at 32-34; EX1002, ¶¶109-112. Purportedly, this would be done to enhance Chincholi's otherwise "static (and limited)" interfaces, thereby adding "flexibility" to the system. Pet. at 11-14. Tellingly, by characterizing the OMMA layer as "static" and "limited" (Pet. at 11), Petitioners tacitly admit the significant differences between the OMMA layer and the '933 patent's "virtual MAC interface," as discussed above in Section V.A.1.

Even allowing for this inconsistency, the Petition still fails to carry its burden to show a reasonable likelihood that a POSITA ***would*** combine Chincholi with Riggert. This is for at least three different reasons.

First, neither the Petition nor Dr. Almeroth address clear disclosures in Riggert that differentiate the role of its bondable virtual interface from that of the virtual PHY interfaces in the '933 patent. In the '933 patent, the virtual PHY interface feeds information about the bandwidth availabilities of the recited transceivers to the virtual MAC interface. EX1001, 12:29-36. The Petition asserts

Riggert's "bondable virtual interfaces" can be combined with the otherwise static mechanisms in Chincholi's OMMA for receiving feedback about bandwidth availability. Pet. at 30-34; EX1002, ¶¶107-112.

But while the '933 patent's virtual PHYs are used for feedback, the "bondable virtual interfaces" of Riggert have a different purpose. The bondable virtual interfaces of Riggert (which is directed to "network streaming") are used for actual transmission of data (streaming video), not for feedback. EX1006, Fig. 5, [002], [057]-[058]. As shown in Figures 8 and 9 of Riggert, the bondable virtual interface 236 receives data from an "application" 230 and transmits it to bondable virtual interface 336, where it is then sent to the application 330. The application 230 represents a streaming application like Netflix on a server, and application 330 represents that application on a user device:

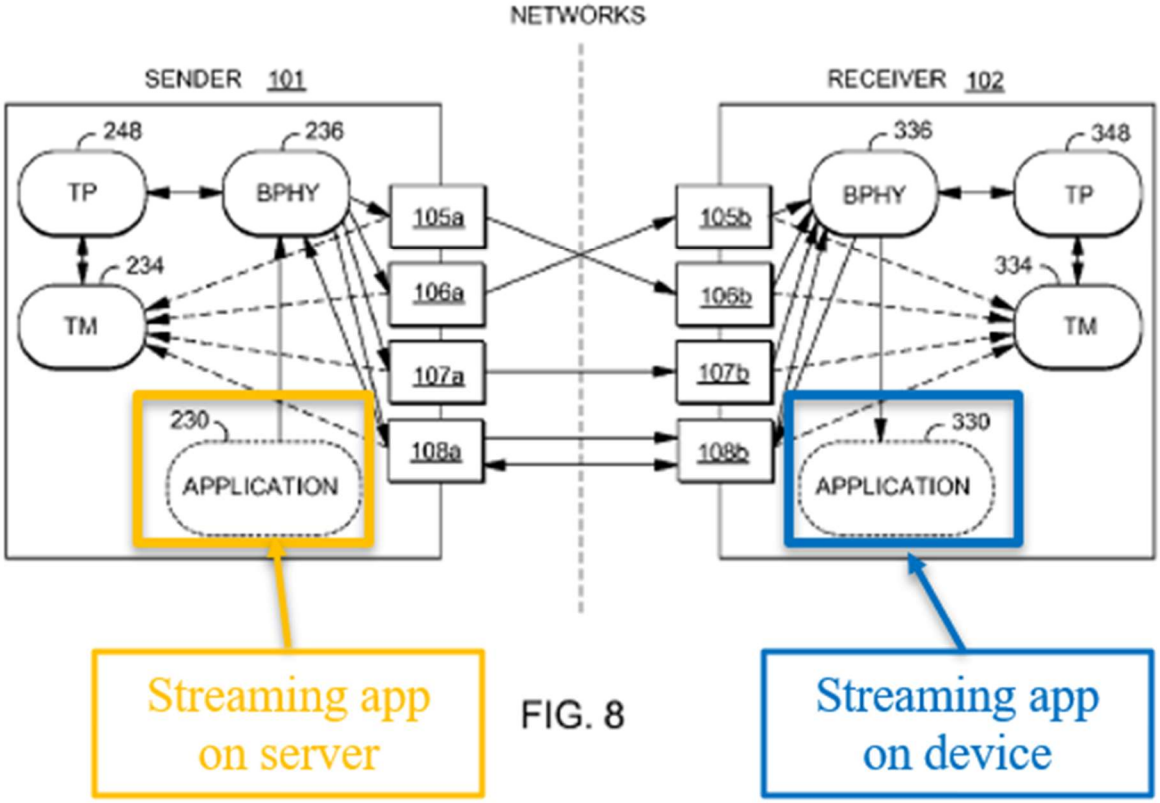

EX1006, Fig. 8 (annotations added); EX2008 (Akl), ¶77. Thus, any feedback that is transmitted in Riggert's system is across devices. EX2008 (Akl), ¶77. Meanwhile, Chincholi, to the extent it discloses feedback transmission at the OMMA layer, only discloses collection of data within a single device. *See* Pet. at 30-31 (quoting EX1005, [0161]). Both the Petition and Dr. Almeroth fail to address this evidence, and thus they do not address why a POSITA would be motivated to combine Riggert—with its disclosure of cross-device transmission, with Chincholi, which discloses only transmission of metrics within a single device. Similarly, they offer no explanation for how or why the bondable virtual PHYs would be added to the

OMMA layer to perform a different function from the one Chincholi describes, which is, in any event, different from what is disclosed by the '933 patent's virtual PHY interfaces. In view of the evidence that the Petition does not address, a POSITA would not look to Riggert to modify Chincholi. EX2008 (Akl), ¶78.

Second, the Petition's claim that a POSITA would be motivated to combine Riggert and Chincholi out of a desire to further virtualize network components is nothing more than applying results-oriented hindsight, armed with the '933 patent. *See, e.g.*, *Insite Vision Inc. v. Sandoz, Inc.*, 783 F.3d 853, 859 (Fed. Cir. 2015) ("'In considering motivation in the obviousness analysis, the problem examined is not the specific problem solved by the invention. Defining the problem in terms of its solution reveals improper hindsight in the selection of the prior art relevant to obviousness.'") (internal citation omitted).[6]

[6] This conclusion is underscored by the Petition's dependence upon U.S. Patent Application 2009/0141691 to Jain (EX1007) as supplying the alleged motivation to combine Chincholi and Riggert. Pet. at 12, 32. Jain is not part of Ground 1 and should be disregarded. *See Meta Platforms, Inc. et. al. v. Eight kHz, LLC*, IPR2023-01023, Paper 10, at 31 (PTAB January 9, 2024) (noting it is improper to support assertions with reference that is "is not relied upon as the basis for this

Finally, if, as the Petition and Petitioners' expert claim, "virtualization" of network elements was well-understood and appreciated at the time of the invention, then there would be no reason for Chincholi to not have included a virtual PHY interface, especially if—as the Petition asserts—Chincholi includes an OMMA that "acts" like a virtual MAC interface. EX2008 (Akl), ¶79. The stated motivation thus fails because it lacks an explanation for why Chincholi—who presumably was advanced in his thinking beyond a POSITA—did not see either that his system needed any improvement or that such improvement could be achieved through the use of "further" virtual elements (assuming, but not agreeing, that the OMMA is a virtual element). *Id.*

By not explaining the inconsistency between the alleged motivation and the actual work done (and not done) by Chincholi, the Petition invites the Board to employ hindsight in lieu of a POSITA's level of knowledge. *See, e.g.*, *Hamilton Beach Brands, Inc. v. f'real Foods, LLC*, 908 F.3d 1328, 1342 (Fed. Cir. 2018) (rejecting motivation to combine argument as improper hindsight where "the prior art does not identify a reason *why* a POSITA would have been motivated to combine those limitations," and noting "it [is] important to identify a reason that would have

---

challenge"). Without Jain, all that remains is the roadmap of the '933 patent itself—constituting impermissible hindsight.

prompted a person of ordinary skill in the relevant field to combine the elements in the way the claimed new invention does").

Ultimately, the Petition's failure to address the record evidence demonstrating these differences shows that the Petition has relied on impermissible hindsight, using the '933 patent claims as a roadmap, instead of introducing evidence demonstrating how or why a POSITA would have combined Chincholi and Riggert. *See Polaris Indus., Inc. v. Arctic Cat, Inc.*, 882 F.3d 1056, 1069 (Fed. Cir. 2018) (finding that a reference's "statements regarding preferences are relevant to a finding regarding whether a skilled artisan would be motivated to combine that reference with another reference" and must be considered to avoid hindsight bias).

2. The Petition Does Not Establish that a POSITA Would Have Either a Reason to Combine Chincholi/Riggert and Clegg or an Expectation of Success from the Combination.

The Petition does not establish a reasonable likelihood that a POSITA would have modified the combination of Chincholi and Riggert with Clegg (EX1009). Specifically, the Petition contends that a POSITA would understand Chincholi's teaching of monitoring available resources and responding to unavailable bandwidth channels could be "enhanced" by Clegg's teaching of addressing and mitigating "carrier specific interference within bandwidth channels." Pet. at 14-15

However, the Petition fails to provide sufficient facts or evidence to support this conclusion, and additionally fails to address evidence of fundamental,

contradictory differences between the references that would discourage a POSITA from making the proposed combination. This, again, is impermissible hindsight that uses the '933 patent's claims as a roadmap. *See Polaris Indus., Inc.*, 882 F.3d at 1069.

First, the Petition and Dr. Almeroth claim that combining Clegg with Chincholi and Riggert could be done "without technical challenge." EX1002, ¶75. This conclusory assertion is made in a single sentence without explanation. It ignores the fact that Clegg is directed to "[w]ireless communication under IEEE 802.11 standards utilizing carrier specific interference mitigation," and specifically, via the employment of "an ultra-wideband tuner." EX1009 at Abstract, 9:60-10:13. Neither Chincholi nor Riggert makes use of an ultra-wideband tuner; instead, they employ typical transceivers that communicate on single Wi-Fi bands under the prevailing wireless standards. *See* EX1005, [0118] (referencing 2.4GHz and 5 GHz bands); EX1006, [0057], EX2008 (Akl), ¶81. The disclosures that the Petition and Dr. Almeroth ignore show that combining Clegg, and its ultra-wideband tuner, with Chincholi and Riggert would necessitate extensive technical reworking, and consequently, a POSITA would not look to Clegg to modify Chincholi and/or Riggert. EX2008 (Akl), ¶81.

Second, the Petition asserts that Clegg teaches limitation 1[j]—"use of the first wireless transceiver to transmit the first data stream to the recipient, ***without***

requiring disassociation of the recipient" from the actual MAC and PHY interfaces. Pet. at 42 (emphasis added). As described above in Section V.A.4, the "without disassociation" limitation provides for an improvement over the prior art method of "break before make"—where a first association must be broken before a second can be initiated. Section V.A.4; EX2008 (Akl), ¶74.

In fact, Clegg does not demonstrate the '933 patent's "without disassociating" limitation, and instead adheres to the prior art "break before make" norm. Again, the Petition and Dr. Almeroth do not address these disclosures in Clegg. Indeed, Clegg states that, an access point or user equipment will "take steps necessary to … prepare communication using the candidate carriers," which "may involve tuning to the appropriate carriers." *See* EX1009 at 11:4-22. A POSITA would understand that this process of tuning the carriers in order to prepare for communication would require "breaking before making." EX2008 (Akl), ¶83.[7] Therefore, a POSITA would not be

[7] Nor does the disclosure of Clegg cited in the Petition say otherwise—the "notching out" by OFDM subcarriers and "selection of a cluster of carriers" says nothing at all about breaking before making or disassociating before another association can be made. *Id.* In fact, OFDM and all standards referenced in Clegg only operate on a "break before make" basis, and Clegg does not have any disclosure of any deviations from specifically mentioned standards to implement "make before

motivated to combine Chincholi and/or Riggert with Clegg in order to achieve the "without disassociating" limitation. *Id.*[8] Any determination otherwise is "hindsight

---

break" or OFDMA. EX2008 (Akl), ¶82. Even if the Petition is correct that Chincholi teaches the "without disassociating" limitation (it is not, *see* Section V.A.4), a POSITA would not be motivated to combine Clegg with Chincholi. EX2008 (Akl), ¶84. To the extent the Petition is wrong (it is), it would be irrelevant if a POSITA would combine Clegg with Chincholi, since neither reference, alone or in combination, discloses the "without disassociating" limitation. *Id.*

[8] The Petition appears to argue that the combination would need to be further modified according to the teachings of U.S. Patent 9,379,868 to Wang regarding "association identifiers," in order to achieve the "without disassociation" limitation. Pet. at 43. Neither the Petition nor the supporting expert declaration provide any details as to how these modifications would be done to three systems, all of which use a "break before make" modality. Moreover, the Petition relies upon Wang as much more than a background reference; but Wang is not identified as part of the Grounds and so should not be considered in evaluating the asserted combination. *See Meta Platforms, Inc.*, IPR2023-01023, Paper 10, at 31 (PTAB January 9, 2024) ("We further note that several of Petitioner's assertions are supported only by VR Book, which is not relied upon as the basis for this challenge . . . .").

abuse." *See Medtronic, Inc. v. Teleflex Innovations S.a.r.l.*, 69 F.4th 1341, 1351 (Fed. Cir. 2023) (where combination does not "achieve the same end" as the claimed invention, Board correct to find no motivation to combine, further noting that a contrary finding would be "a recipe ripe for hindsight abuse").

VI. CONCLUSION

The Petition does not establish a reasonable likelihood that any of the challenged claims are unpatentable. Institution should be denied.

Dated: October 10, 2025

Respectfully Submitted,

/*Cyrus A. Morton*/

Cyrus A. Morton
(Reg. No. 44,954)
CMorton@RobinsKaplan.com
Lead Counsel
Robins Kaplan LLP
800 LaSalle Avenue, Suite 2800
Minneapolis, MN 55402
Phone: 612-349-8500
Fax: 612-339-4181

Attorney for Patent Owner

WORD-COUNT CERTIFICATE

The undersigned certifies that the foregoing Patent Owner's Preliminary Response complies with the type-volume limitation of 37 C.F.R. § 42.24(a) and (b) and contains 8,671 words in 14-point Times New Roman font as calculated by the word count feature of Microsoft Office. This word count is inclusive of all text and footnotes but does not include the table of contents, table of authorities, certificates or service or word count, or appendix of exhibits or claim listing.

Dated: October 10, 2025

/Cyrus A. Morton/

Cyrus A. Morton
(Registration No. 44,954)
CMorton@RobinsKaplan.com
Robins Kaplan LLP
800 LaSalle Avenue, Suite 2800
Minneapolis, MN 55402
Phone: 612-349-8500
Fax: 612-339-4181

Attorneys for Patent Owner

CERTIFICATE OF SERVICE

The undersigned certifies that the foregoing Patent Owner's Preliminary Response was served on October 10, 2025, by electronic mail to Petitioners' counsel at the following addresses indicated in Petitioners' Mandatory Notices:

James M. Glass
jimglass@quinnemanuel.com

Patrick T. Schmidt
patrickschmidt@quinnemanuel.com

Benjamin Kleinman
benjaminkleinman@quinnemanuel.com

Quincy Lu
quincylu@quinnemanuel.com

Dated: October 10, 2025

/Cyrus A. Morton/

Cyrus A. Morton
(Registration No. 44,954)
CMorton@RobinsKaplan.com
Robins Kaplan LLP
800 LaSalle Avenue, Suite 2800
Minneapolis, MN 55402
Phone: 612-349-8500
Fax: 612-339-4181

Attorneys for Patent Owner