UNITED STATES PATENT AND TRADEMARK OFFICE

BEFORE THE PATENT TRIAL AND APPEAL BOARD

SAMSUNG ELECTRONICS CO., LTD.,
SAMSUNG ELECTRONICS AMERICA, INC.,

Petitioners,

v.

XIFI NETWORKS R&D, INC,

Patent Owner

Case IPR2025-01207

U.S. Patent No. 12,015,933

**DECLARATION OF DR. ROBERT AKL, D.SC.
IN SUPPORT OF PATENT OWNER RESPONSE**

TABLE OF CONTENTS

I. INTRODUCTION 4

II. QUALIFICATIONS AND BACKGROUND 4

III. MATERIALS CONSIDERED AND BASIS OF OPINION 11

IV. LEGAL PRINCIPLES 11

A. Prior Art 13

B. Anticipation 13

C. Obviousness 13

V. LEVEL OF ORDINARY SKILL 18

VI. BACKGROUND TO THE ’933 PATENT AND PROTOCOL STACK/ LAYER MODELS 19

VII. ANALYSIS OF CLAIM TERMS 25

A. “virtual MAC interface” 25

B. “in a manner transparent to any layer of the wireless networking device above the processing interface” 28

C. “information regarding the bandwidth availabilities of the first and second wireless transceivers” 29

VIII. ANALYSIS OF CHINCHOLI, RIGGERT, AND CLEGG, AND THE COMBINATION THEREOF 38

A. Opinion on Chincholi Compared to Various Limitations of the ’933 Patent Claims 39

1. “virtual MAC interface” 39

2. “information regarding the bandwidth availabilities of the first and second wireless transceivers” 49

3. "processing interface . . . configured to" perform claimed functions "in a manner transparent to any layer of the wireless networking devices" 51

4. "wherein … the wireless networking device's utilization of the first available bandwidth portion of the first wireless transceiver does not prevent any wireless networking device devices from utilizing a range of frequencies corresponding to the remaining portion of the bandwidth availability of the first wireless transceiver…" 55

5. "without requiring disassociation of the recipient from … MAC and PHY interfaces" 59

B. Opinion on the Combination of Chincholi and Riggert and the Disclosure of Riggert 61

C. Opinion on the Combination of Chincholi/Riggert and Clegg and the Disclosure of Clegg 66

I. INTRODUCTION

1. I have been retained by XiFi Networks R&D, Inc., ("XiFi") as an independent expert consultant in this proceeding before the United States Patent and Trademark Office.

2. I am over 21 years of age and, if I am called upon to do so, I would be competent to testify as to the matters set forth herein.

3. I have been asked by Patent Owner to provide my opinions on the validity of US. Patent No. 12,015,933 (the "'933 Patent") and to rebut arguments made by Petitioners and Dr. Almeroth.

4. Throughout this declaration, I refer to specific pages, figures, and/or line numbers of various exhibits. These citations are illustrative and are not intended to suggest that they are the only support for the propositions for which they are cited.

5. I am being compensated for my time at my normal hourly rate. My compensation is in no way contingent upon the nature of my findings, the presentation of my findings in testimony, or the outcome of this proceeding.

II. QUALIFICATIONS AND BACKGROUND

6. I am an expert in the field of wireless networks. I have studied, taught, practiced, and researched this field for over 30 years. I have summarized in this section my educational background, work experience, and other relevant

qualifications. A true and accurate copy of my curriculum vitae is attached as EX2032.

7. I earned two Bachelor of Science degrees in Electrical Engineering and Computer Science *summa cum laude* with a grade point average of 4.0/4.0 and a ranking of first in my undergraduate class from Washington University in St. Louis in 1994. In 1996, I earned my Master of Science degree in Electrical Engineering from Washington University in St. Louis with a grade point average of 4.0/4.0. I earned my Doctor of Science in Electrical Engineering from Washington University in St. Louis in 2000, again with a grade point average of 4.0/4.0, with my dissertation being on "Cell Design to Maximize Capacity in Cellular Code Division Multiple Access (CDMA) Networks."

8. While a graduate student, from 1997 through 1999, I worked at MinMax Corporation in St. Louis, where I designed software packages that provided tools to flexibly allocate capacity in a CDMA communications network and maximize the number of subscribers. I also validated the hardware architecture for an Asynchronous Transfer Mode (ATM) switch capable of channel group switching, as well as performed logical and timing simulations, and developed the hardware architecture for the ATM switch. I also worked with Teleware Corporation in Seoul, South Korea, where I designed and developed algorithms that were commercially

deployed in a software package suite for analyzing the capacity in a CDMA network implementing the IS-95 standard to maximize the number of subscribers.

9. After obtaining my Doctor of Science degree, I worked as a Senior Systems Engineer at Comspace Corporation from October of 2000 to December of 2001. At Comspace, I designed and developed advanced data coding and modulation methods for improving the reliability and increasing the available data rates for cellular communications. I coded and simulated different encoding schemes (including Turbo coding, Viterbi decoding, trellis coded modulation, and Reed-Muller codes) and modulation techniques using amplitude and phase characteristics and multi-level star constellations. This work further entailed the optimization of soft decision parameters and interleavers for additive white Gaussian and Rayleigh faded channels. In addition, I also extended the control and trunking of Logic Trunked Radio (LTR) to include one-to-one and one-to-many voice and data messaging.

10. In January of 2002, I joined the faculty of the University of New Orleans in Louisiana as an Assistant Professor in the Department of Electrical Engineering. While in this position, I designed and taught two new courses called "Computer Systems Design I and II." I also developed a Computer Engineering Curriculum with a strong hardware-design emphasis, formed a wireless research

group, and advised graduate and undergraduate students.

11. In September of 2002, I received an appointment as an Assistant Professor in the Department of Computer Science and Engineering at the University of North Texas (UNT), in Denton, Texas. In May of 2008, I earned tenure and was promoted to the rank of Associate Professor. Between January of 2015 and August of 2022, I was appointed to Associate Chair of Graduate Studies. In May of 2023, I was promoted to the rank of Professor.

12. As a faculty member, I have authored and co-authored over 100 journal publications, conference proceedings, technical papers, book chapters, and technical presentations in a broad array of communications-related technologies, including networking and wireless communication. I have also developed and taught over 100 courses related to communications and computer systems, including 2G, 3G, 4G, 5G, 6G, CDMA/WCDMA, GPS, GSM, LTE, NFC, NR, RFID, UMTS, VoIP, VPLS, ad-hoc networks, antenna design and beamforming, Bluetooth, call admission control, channel coding, channel estimation, communication interfaces and standards, compression, computer architecture, Internet protocols, MIMO systems, multi-cell network optimization, network security, packet-networks, ring-networks, switches and routers, telephony, Wi-Fi (802.11), 802.15.4, Zigbee, wireless communication, and wireless sensors. A complete list of my publications

and the courses I have developed and/or taught is also contained in my *curriculum vitae*.

13. I am also the director of the Wireless Sensor Lab ("WiSL") at UNT. I am a member of the Center for Information and Cyber Security (CICS). It is the only program in the U.S. to be federally certified by the National Security Agency as a Center of Academic Excellence in Information Assurance Education and Research *and* Cyber Defense Research. I was also a member of the NSF Net-Centric & Cloud Software & Systems: Industry-University Cooperative Research Center (I/UCRC). Several of my research projects are funded by industry and the National Science Foundation and published in *IEEE* conference proceedings and journals.

14. In addition to advising and mentoring students at UNT, I was asked to join the faculty of the University of Arkansas in Little Rock as an Adjunct Assistant Professor from 2004 to 2008 in order to supervise the research of two Ph.D. graduate students who were doing research in wireless communications. At UNT, I have advised and supervised more than 250 undergraduate and graduate students, several of whom received a master's or doctorate degree under my guidance.

15. Between 2005 and 2017, I have received over a million dollars in funding from the State of Texas, Texas Higher Education Coordination Board, the National Science Foundation, and industry to design and conduct robotics, video,

and mobile gaming (*e.g.*, Xbox, PC, mobile device) programming summer camps for middle and high school students at UNT. By using video and mobile gaming as the backdrop, participants have learned coding and programming principles and developed an understanding of the role of physics and mathematics in video game design.

16. Between 2011 and 2013, I was director of the Bio-Com Project that was funded by Raytheon. The project evaluated the feasibility study using Surface Electromyography (EMG) and bend resistive sensors, that are attached to each of the five fingers of the hand, for hand gesture recognition. This approach is sometimes known as a "data glove." A prototype was developed and demonstrated at Raytheon, to help soldiers in close-combat situations communicate with hand gestures and hand signals that would be recognized and transmitted to other soldiers' Head Up Display (HUD) without breaking radio silence.

17. In addition to my academic work, I have remained active in the communication industry through my consulting work. In 2002, I consulted for Input/Output Inc. and designed and implemented algorithms for optimizing the frequency selection process used by sonar for scanning the bottom of the ocean. In 2004, I worked with Allegiant Integrated Solutions in Ft. Worth, Texas to design and develop an integrated set of tools for fast deployment of wireless networks, using

the 802.11 standard. Among other features, these tools optimize the placement of Access Points and determine their respective channel allocations to minimize interference and maximize capacity. I also assisted the Collin County Sheriff's Office (Texas) in a double homicide investigation, analyzing cellular record data to determine user location.

18. My professional affiliations include services in various professional organizations and serving as a reviewer for a number of technical publications, journals, and conferences. I have also received a number of awards and recognitions, including the *IEEE* Professionalism Award (2008), UNT College of Engineering Outstanding Teacher Award (2008), and Tech Titan of the Future (2010) among others, which are listed in my *curriculum vitae*.

19. I have also served as an expert in certain legal proceedings. A list of cases in which I have testified at trial, hearing, or by deposition (including those during the past five years) is provided in my *curriculum vitae*. Over the years, I have been retained by both petitioners as well as patent owners.

20. I previously provided a declaration in this matter in support of Patent Owner's Preliminary Response, and I also provided a declaration in support of Patent Owner's claim construction positions in the co-pending district court case, *XiFi Networks R&D, Inc. v. Samsung Electronics Co., Ltd. and Samsung Electronics*

America, Inc., No. 2:24-cv-01057-JRG (E.D. Tex.).

III. MATERIALS CONSIDERED AND BASIS OF OPINION

21. In forming my opinions, I have reviewed the parties' papers and exhibits, and any other document cited in this declaration. In the cited references, all emphasis is added unless otherwise noted.

22. I have also relied on my education, experience, research, training, and knowledge in the relevant art, and my understanding of any applicable legal principles described in this declaration.

23. All of the opinions contained in this declaration are based on the documents I reviewed and my knowledge and professional judgment. My opinions have also been guided by my understanding of how a person of ordinary skill in the art would have understood the claims of the patent at the time of the earliest claimed priority date.

24. I reserve the right to supplement and amend any of my opinions in this declaration based on documents, testimony, and other information that becomes available to me after the date of this declaration.

IV. LEGAL PRINCIPLES

25. I am not a lawyer. For the purposes of this declaration, I have been informed about certain aspects of the law that are relevant to my analysis and

opinions. In preparing this declaration and in rendering my opinions below, I have applied these legal principles.

26. I have been informed that there are two ways in which prior art may render a patent claim unpatentable. First, I have been informed that the prior art can "anticipate" a claim. Second, I have been informed that the prior art can render a claim "obvious" to a person of ordinary skill in the art. I understand that a claim is patentable if it was not anticipated and would not have been obvious by the prior art at the effective filing date of the patent.

27. I have been informed that a dependent claim is a patent claim that refers back to another patent claim. I have been informed that a dependent claim includes all of the limitations of the claim to which it refers.

28. I have been informed that in *inter partes* review proceedings, such as this one, the party challenging the patent bears the burden of proving unpatentability by a preponderance of the evidence. I understand that a preponderance of the evidence means "more likely than not."

29. For purposes of this declaration, I have been asked to provide my opinions on issues regarding unpatentability. I have been informed of the following legal standards, which I have applied in forming my opinions.

A. Prior Art

30. I have been advised and understand the information used to evaluate whether an invention was new and not obvious when made is generally referred to as "prior art." I understand that prior art includes patents and printed publications that existed before the earliest claimed priority date or the earliest filing date of the patent (which I have been informed is also called the "effective filing date"). I have been informed and understand that a patent or published patent application is prior art if it was filed before the earliest filing date of the claimed invention and that a printed publication is prior art if it was publicly available before the earliest filing date.

B. Anticipation

31. I have been informed that under 35 U.S.C. § 102, a patent claim is unpatentable for anticipation if the claimed subject matter was patented or described in a printed publication before the effective filing date of the claimed invention. I have been informed that this is referred to as unpatentability by anticipation. I have been informed that a patent claim is anticipated under § 102 if a single prior art reference discloses all limitations of the claimed invention.

C. Obviousness

32. I have been informed that obviousness under 35 U.S.C. § 103, a patent claim is unpatentable if the differences between the subject matter sought to be

patented and the prior art are such that the subject matter as a whole would have been obvious to a person having ordinary skill in the art to which said subject matter pertains at the time the invention was made. I have been informed that this is referred to as unpatentability by obviousness.

33. I have been informed that a proper obviousness analysis includes the following:

- Determining the scope and content of the prior art;
- Ascertaining the differences between the prior art and the claims at issue;
- Resolving the level of ordinary skill in the pertinent art; and
- Considering evidence of secondary indicia of non-obviousness (if available).

34. I have been informed that the relevant time for considering whether a claim would have been obvious to a person of ordinary skill in the art is the time of invention.

35. I have been informed that a reference may be modified or combined with other references or with a person of ordinary skill in the art's own knowledge if the person would have found the modification or combination obvious. I have also been informed that a person of ordinary skill in the art is presumed to know all

the relevant prior art, and the obviousness analysis may take into account the inferences and creative steps that a person of ordinary skill in the art would employ.

36. I have been informed that whether a prior art reference renders a patent claim obvious is determined from the perspective of a person of ordinary skill in the art. I have also been informed that, while there is no requirement that the prior art contain an express suggestion to combine known elements to achieve the claimed invention, and while a suggestion to combine known elements to achieve the claimed invention may come from the prior art as a whole or individually and may consider the inferences and creative steps a person of ordinary skill in the art would employ, as filtered through the knowledge of one skilled in the art, obviousness grounds cannot be sustained by mere conclusory statements and must include some articulated reasoning with some rational underpinning to support the legal conclusion of obviousness.

37. In determining whether a prior art reference could have been combined with another prior art reference or other information known to a person having ordinary skill in the art, I have been informed that the following principles may be considered:

- A combination of familiar elements according to known methods is likely to be obvious if it yields predictable results;

- The substitution of one known element for another is likely to be obvious if it yields predictable results;
- The use of a known technique to improve similar items or methods in the same way is likely to be obvious if it yields predictable results;
- The application of a known technique to a prior art reference that is ready for improvement to yield predictable results;
- Any need or problem known in the field and addressed by the reference can provide a reason for combining the elements in the manner claimed;
- A person of ordinary skill often will be able to fit the teachings of multiple references together like a puzzle; and
- The proper analysis of obviousness requires a determination of whether a person of ordinary skill in the art would have a "reasonable expectation of success"—but not "absolute predictability" of success—in achieving the claimed invention by combining prior art references.

38. I have been informed that, when a work is available in one field, design alternatives and other market forces can prompt variations of it, either in the same field or in another. I have been informed that if a person of ordinary skill in the art could have implemented a predictable variation and would have seen the benefit of doing so, that variation is likely to have been obvious. I have been informed that, in

many fields, there may be little discussion of obvious combinations, and in these fields market demand—not scientific literature—may drive design trends. I have been informed that, when there was a design need or market pressure and there are a finite number of predictable solutions, a person of ordinary skill in the art would have had a good reason to pursue those known options.

39. I have been informed that the law permits the application of "common sense" in examining whether a claimed invention would have been obvious to a person skilled in the art. For example, I have been informed that combining familiar elements according to known methods and in a predictable way may suggest obviousness when such a combination would yield nothing more than predictable results. I understand, however, that a claim is not obvious merely because every claim element is disclosed in the prior art and that a party asserting obviousness must still provide a specific motivation to combine or modify the references as recited in the claims and explain why one skilled in the art would have reasonably expected to succeed in doing so.

40. I have been informed that there is no rigid rule that a reference or combination of references must contain a "teaching, suggestion, or motivation" to combine references. But I also understand that the "teaching, suggestion, or motivation" test can be a useful guide in establishing a rationale for combining

elements of the prior art. I have been informed that this test poses the question as to whether there is an express or implied teaching, suggestion, or motivation to combine prior art elements in a way that realizes the claimed invention, and that it seeks to counter impermissible hindsight analysis.

41. I have been informed that, in an obviousness analysis, prior art must be analogous prior art to the patent being considered. I have been informed that a prior art reference is considered to be analogous, or in the same field of art, if the reference is either (1) in the same field of endeavor as the challenged patent, regardless of the problems the challenged patent and the prior art address, or (2) reasonably pertinent to the particular problem being solved by the challenged patent.

V. LEVEL OF ORDINARY SKILL

42. I understand there is a concept in patent law known as a person having ordinary skill in the art ("POSITA"). I understand that this concept refers to a person who is trained in the relevant technical field of a patent without possessing extraordinary or otherwise exceptional skill. I further understand that factors such as the education level of those working in the field, the sophistication of the technology, the types of problems encountered in the art, prior art solutions to those problems, and the speed at which innovations are made may help establish the level of skill in the art.

43. I understand that Petitioners have proposed that a POSITA at the time of the ’933 Patent had at least a Bachelor of Science in electrical engineering, computer engineering, or similar fields and at least two years of practical experience in the field of computer networks and wireless communication applications. More education can supplement for less practical experience, and vice versa.

44. For purposes of this declaration only, I have applied the definition provided by Petitioners with regard to the level of skill in the art. I do not necessarily agree with particular statements in the Petition and supporting materials about what a POSITA would have known, what they would understand, or how they would be motivated.

45. Based at least on my educational and work experience, under Petitioners’ definition, I was at least a POSITA as of the date of the invention. And while I note that my qualifications and experiences exceed this definition of a POSITA, in arriving at the conclusions in this Declaration, I have considered the issues from the perspective of a person of ordinary skill of the art at the relevant time.

VI. BACKGROUND TO THE ’933 PATENT AND PROTOCOL STACK/ LAYER MODELS

46. As background to ’933 Patent, at the time of its priority date, a POSITA would understand that wireless networking devices were conceptualized as a layer

stack. A POSITA would also understand that each layer, known interchangeably as interfaces, serves a distinct purpose or function. Working together, these layers are commonly referred to as a protocol or layer stack A well-known protocol stack model is the Open Systems Interconnection ("OSI") model, shown, for example, in the Tanenbaum *Computer Networks* text, and depicted below:

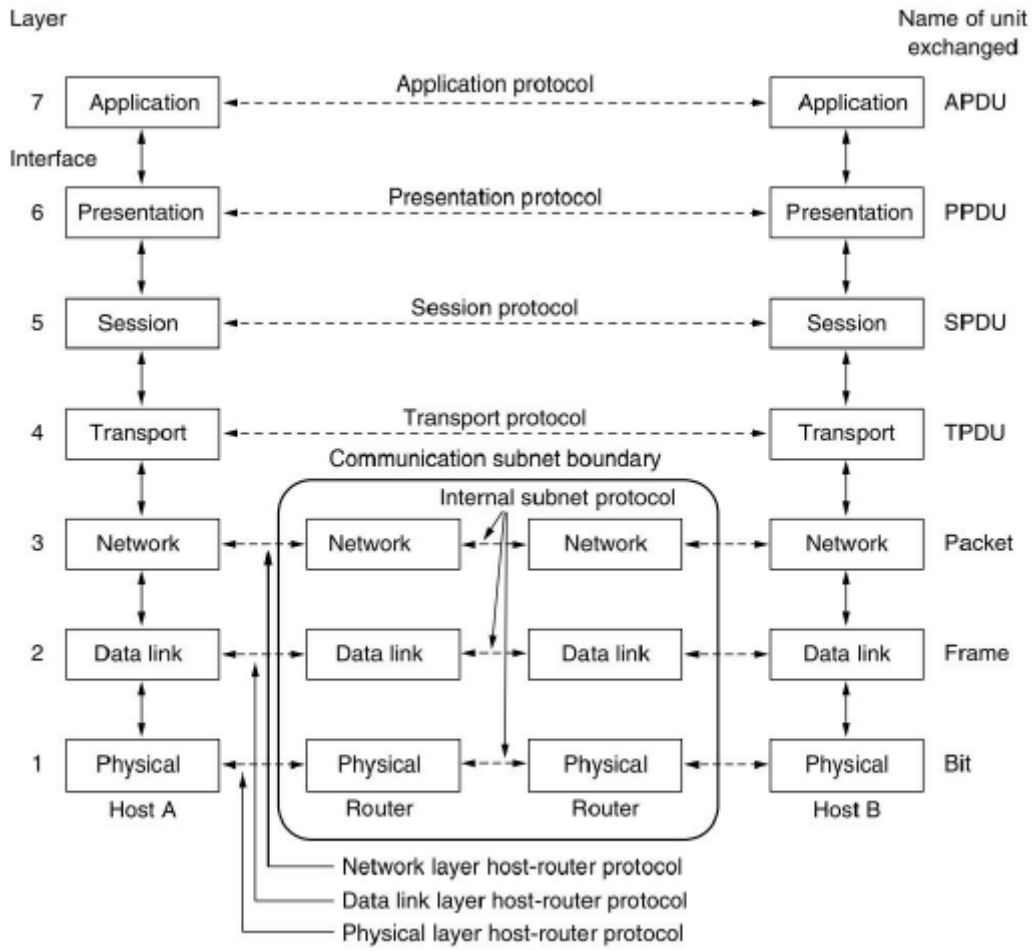

Figure 1-20. The OSI reference model.

See EX2018 (Tanenbaum) at 42.

47. A POSITA would have recognized that the OSI model, like other

protocol stack models, has multiple layers. The layer at the "top" of the stack is typically called the application layer. As Tanenbaum explains, the application layer contains protocols needed by users, such as the HTTP protocol for the internet, as well as protocols for applications such as file transfer and email. *See id.* at 45.

48. At the other end, or "bottom" of the stack, is the physical layer, whose function is to govern the transmission of raw bits of data over a communication channel. *See id.* at 43. Immediately above the physical layer is the data link layer, whose function is to transform the raw data as transmitted by the physical layer into data frames that appear to the next higher layer (the network layer) as error-free. *Id.* The network layer is responsible for routing decisions across the network, and works to avoid bottlenecks and congestion. *See id.* at 43-44. A POSITA would also be aware of the transport layer, session layer, and presentation layer, each with their own functions not relevant here. *See id.* at 44-45.

49. A POSITA would understand that the data link layer conventionally includes two distinct sublayers. The upper layer, closest to the network layer, is typically referred to as the Logic Link Control ("LLC") sublayer. The lower layer, closest to the physical layer, is known as the medium access control ("MAC") sublayer. A depiction of the two conventional sublayers of the data link layer is below:

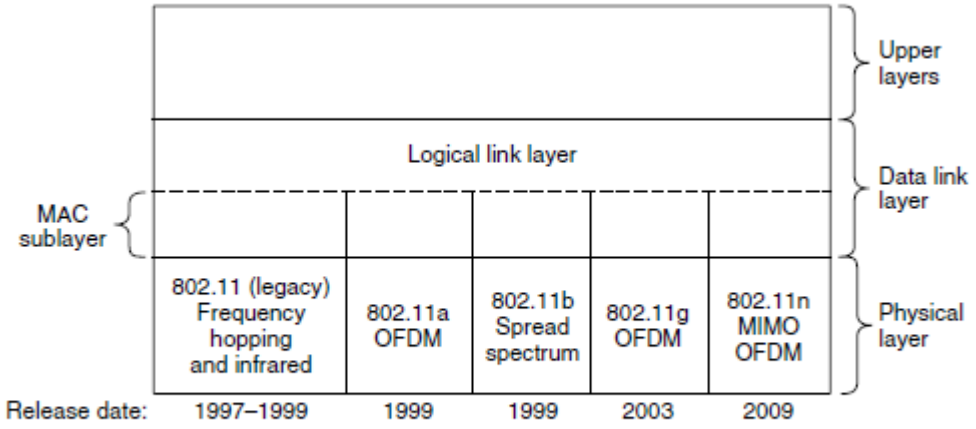

Figure 4-24. Part of the 802.11 protocol stack.

EX2010 (Tanenbaum) at 300.

50. A POSITA would understand that, in wireless networking stacks, any particular layer can only "talk" to, or communicate with, the layer immediately above or below it. For example, in a 1996 document released by the International Organization for Standardization and the International Electrotechnical Commission detailing the "Basic Reference Model" for "Open Systems Interconnection" ("Basic Reference Model") explains that "the Reference Model ***permits direct interaction only between adjacent layers***," that that therefore, "the network-entity cannot interact directly with the physical-entity." EX2019 (Basic Reference Model), § 7.5.4.2.2. Similarly, an interaction between the Network Layer (layer 3) and the Physical Layer (layer 1) must involve an intervening interaction by each of those layers with the Data Link Layer (layer 2). *See id.* ("This interaction is thus described through the Data Link Layer which intervenes transparently to convey the

interaction between the Network Layer and the Physical Layer."). A POSITA would understand the processing interface to be in the MAC sublayer and not Logical Link Layer because the Logical Link Layer standardizes the format of information it receives from the actual MAC sublayers and presents that uniform format to the Network Layer. *See, e.g.*, EX2018 (Tanenbaum) at 41-45.

51. Separate from layer models, a POSITA would be familiar with the IEEE 802.11 standard for wireless networks. *See, e.g.*, EX2018 (Tanenbaum) at 19-20. A POSITA would understand that "802.11 networks can be used in two modes": "infrastructure mode," where "each client is associated with an AP (Access Point) that is in turn connected to the other network" and a "not very popular" mode called "ad hoc," which "is a collection of computers that are associated so that they can directly send frames to each other" and where "[t]here is no access point." EX2010 (Tanenbaum) at 299. These two modes are depicted in the Tanenbaum textbook using the following image:

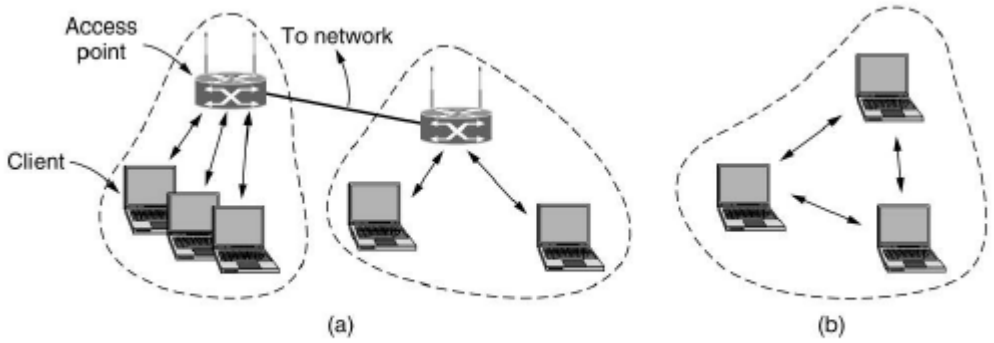

Figure 4-23. 802.11 architecture. (a) Infrastructure mode. (b) Ad-hoc mode.

EX2018 (Tanenbaum) at 300. Another example of infrastructure mode is exemplified in Petitioners' reference, Chincholi, which depicts wireless transmit/receive units (WRTUs) 102a-102d, which "may be any type of device configured to operate and/or communicate in a wireless environment" including "user equipment (UE)" such as "a cellular telephone, a personal digital assistant (PDA), a smartphone, [or] a laptop" in communication with base stations 114a and 114b, which may be "an access point (AP), a wireless router, and the like," via a "wireless communication link" including one using IEEE 802.11:

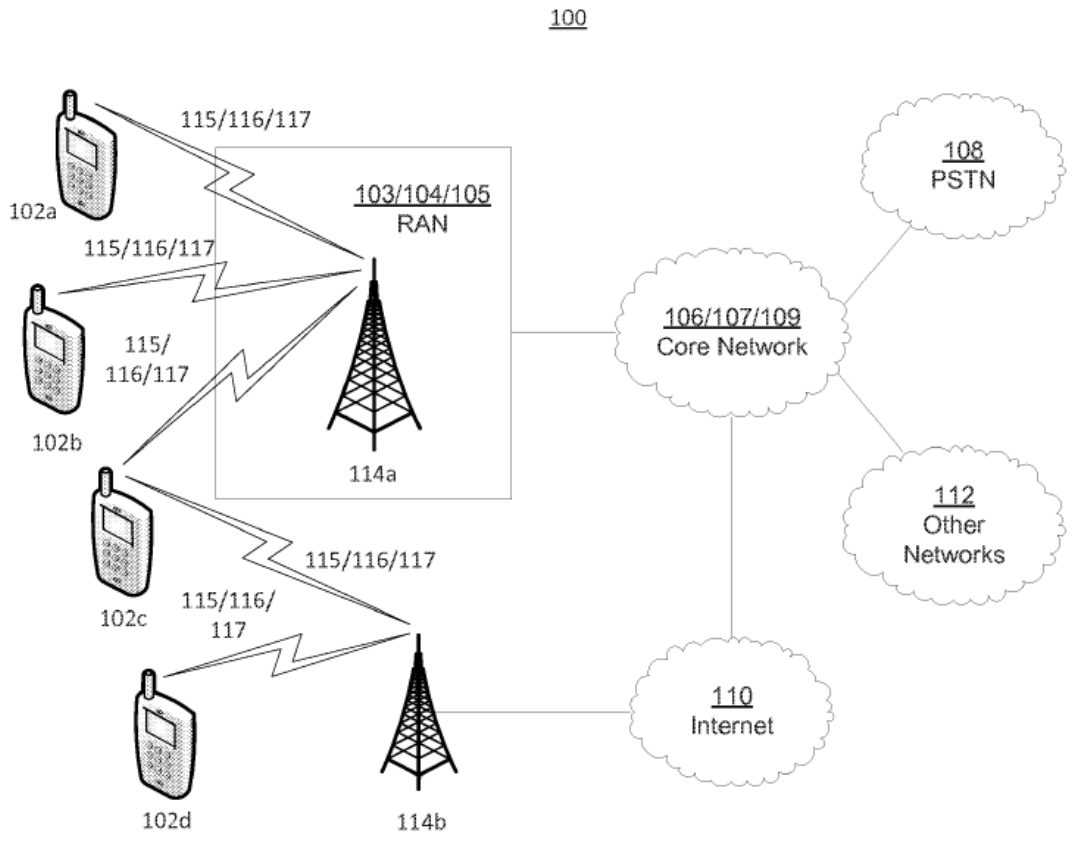

FIG. 1A

EX1005 at [0073]-[0075], [0077], [0081], Fig. 1A.

VII. ANALYSIS OF CLAIM TERMS

A. "virtual MAC interface"

52. As I previously opined in my declaration supporting Patent Owner's Preliminary Response, a POSITA would understand the meaning of the word "virtual" by its plain and ordinary meaning. EX2008, ¶50. To explain, A POSITA would understand that "virtual" means that which is not physical or tied to the physical world, but rather software-based, abstract, or logical. For example, a

"virtual reality" is a reality not defined by physical reality. A "virtual machine" is a machine that is software-defined, and not physically defined. Similarly, a "virtual MAC interface" is a software or logical construct that has an address that can be changed, and which need not be static. This is consistent with contemporary dictionary definitions of "virtual." *See* EX2009 (2012 American Heritage Dictionary) at 906 ("virtual" means "[c]reated, simulated, or carried on by means of a computer or computer network" and "[e]xisting …not in actual fact or form").

53. This understanding of "virtual" is also consistent with the contrast with the "actual MAC interface" claimed in the '933 Patent, which a POSITA would have understood to have an address that is permanent and installed by the manufacturer, *i.e.*, physical. *See, e.g.*, EX2010 (Tanenbaum) at 339 ("MAC addresses are installed by the manufacturer and guaranteed to be unique worldwide….").

54. This understanding of "virtual MAC interface" and "actual MAC interface" is consistent with usage in contemporary patents, which make clear that a "virtual MAC interface" sits between the actual MAC interface and higher layers, such that it obscures the actual MAC interface's address from higher layers via its programmable, non-static—virtual—address. *See, e.g.*, EX2011 (U.S. Patent No. 8,078,208) at 6:39-40 ("A single virtual MAC address 311 hides the MAC addresses of the several NICs …."); *see also id.* at Abstract (invention contains a "virtual layer

that hides the multiple physical network interfaces from higher layers of a node's network protocol stack"). Where a virtual MAC interface is present, a POSITA would understand that packets are passed up the protocol stack from the virtual MAC interface with the virtual MAC address in the payload.

55. I understand that the parties in the district court case have agreed to a construction for "virtual MAC interface" of "a software- or logical-based interface that is separately addressable from the recited actual MAC interfaces and that obscures the recited actual MAC interfaces from higher protocol stack layers." EX2020 (Amended Joint Claim Construction Statement) at 2. This incorporates a POSITA's understanding of the term "virtual" as "software-based or logical." *See supra*, ¶52. This also incorporates the idea that a virtual MAC interface would use a virtual MAC address which can be changed, and need not be static—contrary to the manufacturer-installed actual MAC address. *See supra*, ¶52. Finally, this incorporates the concept that the usage of the virtual MAC address "obscures the recited actual MAC addresses from higher protocol stack layers." *See supra*, ¶53. Thus, the construction the parties agreed to in the district court is consistent with the plain and ordinary meaning of "virtual MAC interface" as understood by a POSITA.

56. The district court construction, by stating that the actual MAC addresses are obscured "from higher protocol stack layers" is consistent with

applicant statements during related prosecution locating the virtual MAC interface, as a component of the processing interface, in the MAC sublayer of the data link layer. EX2023 ('105 Patent File History) at 21, 1/11/2024 Second Preliminary Amendment and Applicant Remarks (applicant remarks distinguishing prior art because bandwidth decisions were made "at a layer above the MAC/PHY layers" and that the patent required "all bandwidth allocation decisions be made in a manner transparent to the layers above the MAC/PHY interfaces"); *see also infra*, Section VII.C.

B. "in a manner transparent to any layer of the wireless networking device above the processing interface"

57. I understand that, in the district court, the parties agreed to a construction for "in a manner transparent to any layer of the wireless networking device above the processing interface" of "in a manner where any protocol stack layer of the wireless networking device above the processing interface is unaware of the operation of the processing interface." EX2020 (Joint Claim Construction Statement) at 2.

58. This construction's inclusion of the concept of higher layers being "unaware of the operation of the processing interface" is consistent with my previous opinion that a POSITA would understand that the transparent bandwidth decision-making by the processing interface would involve "obscuring the addresses and

operation of the actual MAC and PHY layers to the upper layers." EX2008, ¶64.

59. This construction is also consistent with statements applicant made during prosecution of patents in the same family, including that claimed functions were "transparent to the layers of the wireless networking device above its MAC/PHY interfaces." EX2023 ('105 Patent File History) at 34, 2/5/2024 Third Preliminary Amendment and Applicant Remarks; *see also id.* at 21, 1/11/2024 Second Preliminary Amendment and Applicant Remarks (applicant remarks distinguishing prior art because bandwidth decisions were made "at a layer above the MAC/PHY layers" and that the patent required "all bandwidth allocation decisions be made in a manner transparent to the layers above the MAC/PHY interfaces").

C. "information regarding the bandwidth availabilities of the first and second wireless transceivers"

60. I understand that, in the district court, the parties put forward separate proposals for the construction of "information regarding the bandwidth availabilities of the first and second wireless transceivers." EX2020 (Joint Claim Construction Statement) at 5. I understand that Patent Owner's proposed construction is "information regarding current bandwidth availabilities of the recited wireless transceivers, that can be obtained directly from at least the recited actual PHY interface(s) and the recited actual MAC interface(s)," while Petitioners' is

"information regarding current bandwidth availabilities of each of the wireless transceivers." *Id.*

61. Based on these constructions, I understand that the parties agree that the information must relate to "current" bandwidth availabilities, which is consistent with how a POSITA would understand the disclosure in the '933 Patent's specification. *See, e.g.*, EX1001, 5:1-8 ("determin[ing] device availability" "involves a determination at the PHY layer as to the ***actual availability*** of the initially assigned transceiver resources"); *see also id.*, 3:40-48; 4:26-29; 4:54-64; 8:29-33. This is also consistent with the claim 1's recitation of bandwidth portions that are "unavailable for communication." *See id.*, 12:51-62. It is further consistent with the way applicant presented claims of related patents during prosecution, by highlighting that availabilities were evaluated on a per-transmission-opportunity basis. *See, e.g.*, EX2024 ('337 Patent FH) at 5, 9/18/2023 amendment (bandwidth availability of each transceiver evaluated for each transmission opportunity); EX2025 ('414 patent FH) at 11, 9/18/023 amendment (feedback provided as of each transmission opportunity). A POSITA would understand that availabilities as of a particular transmission opportunity would represent the equivalent of actual, or current, bandwidth availabilities.

62. In addition to the agreed portion of the construction, Patent Owner has

proposed in the district court that the information regarding bandwidth availabilities must have the capacity to "be obtained directly from at least the recited actual PHY interface(s) and the recited actual MAC interface(s)." EX2020 (Joint Claim Construction Statement) at 5. This portion of the construction is consistent with a POSITA's understanding of the intrinsic record of the '933 Patent, including both the specification and the prosecution history.

63. The specification explains the invention of the '933 Patent in a layer framework similar to those discussed above in Part VI, including an actual PHY layer at the bottom of a protocol layer stack, an actual MAC layer on top of that, and a virtual MAC and virtual PHY layer above that. *See* EX1001, 2:56-65 ("A virtual MAC layer and a virtual PHY layer are defined between the processing layer and the actual MAC and PHY layers."); 6:4-7 ("By employing a virtual MAC and virtual PHY between an application layer and an actual MAC and PHY layer, wireless transceiver resources may be allocated more efficiently…"); *see also id.*, Fig. 1.

64. A POSITA would understand that the actual PHY layer described in the '933 Patent is in the physical layer, and that the actual MAC layer is in the MAC sublayer of the Data Link Layer. *See id.*, 3:58-67. The processing interface, including the virtual PHY interface, as well as the virtual MAC interface, would be understood to be above those layers, but still in the Data Link Layer. *Id.*, 2:56-65,

66:4-7. This is because the actual PHY interface can communicate directly with the virtual PHY interface—and must therefore be in an adjacent layer. EX2019 (Basic Reference Model), § 7.5.4.2.2.

65. For example, Figure 4 depicts a direct communication between the actual PHY interfaces in devices 1 and 2 with corresponding virtual PHY interfaces regarding the availabilities of devices 1 and 2:

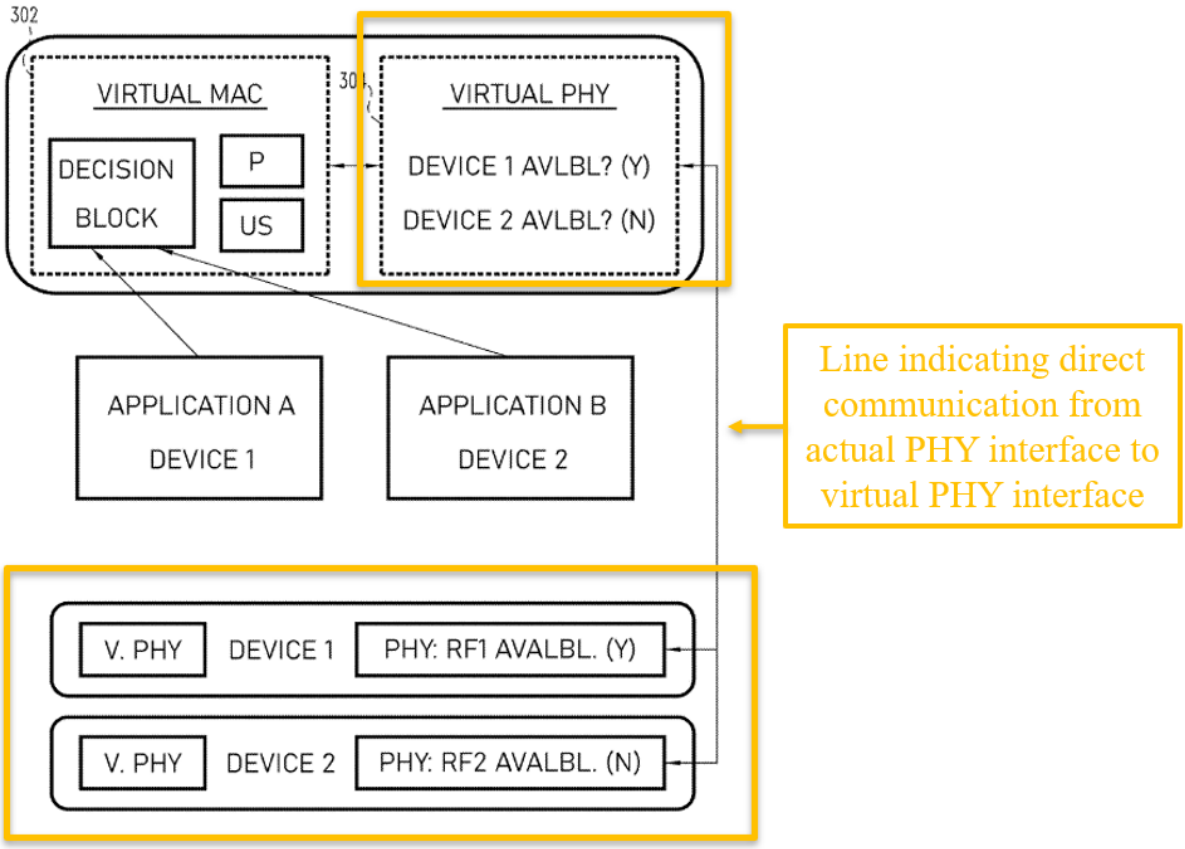

Fig. 4

EX1001, Fig. 4 (annotations added); *see also id.*, 5:1-5. A POSITA would therefore understand that because the virtual PHY interface can communicate directly with

the actual PHY interface, they must be in the same layer or in adjacent layer, and the virtual PHY interface must reside no higher than in the Data Link Layer. The specification clearly states that the source of the information about bandwidth availability is at the PHY layer: "This further involves a determination at the PHY layer as to the actual availability of the initially assigned transceiver resources." *Id.*, 5:3-5.

66. During prosecution of the other patents in the '933 family, applicant made clear that this ability of the wireless transceiver to communicate information about transceiver availability directly with the processing interface was what differentiated these inventions from the prior art. For example, the Examiner noted in an office action during the prosecution of U.S. Patent '591 Patent No. 11,818,591 (the "'591 patent"), that the cited prior art did "not disclose 'the indicator of wireless transceiver availability is fed back from the wireless transceiver circuitry to the distributed processing logic,'" and stated that claims containing that limitation or similar would be allowable. EX2022 ('591 Patent File History) at 20, 2/8/2023 Office Action. A POSITA would understand that this language references a communication from layer 1 (the Physical Layer) to layer 2 (the Data Link Layer). In response, applicant pointed out that the claim language at issue here was present in the claim that eventually became claim 1 of the '591 Patent:

> In the last office action, the Examiner indicated that cancelled claim 5, concerning feeding back to processing circuitry information regarding the bandwidth availability of multiple transceivers, would be allowable if rewritten in independent form. Please note that this feature is included in independent claim 22, which includes the limitation 'wherein... during operation of the wireless networking device, feed information regarding the bandwidth availabilities of the first, second, and third wireless transceivers back to the at least one virtual MAC interface.'"

Id. at 30, 8/8/2023 Amendments and Response to Office Action; *see also id.* at 22 (language of referenced claim 22). The claims were then allowed. *Id.* at 41-43, 9/9/2023 Notice of Allowability (statement of reasons for allowance of claim 22). Given these statements in the '591 Patent file history (and where the '591 Patent is an ancestor patent to the rest of the Asserted Patents), a POSITA would understand that the wireless transceiver bandwidth availability information must be able to be directly communicated to the processing interface, which must be in the same layer or an adjacent layer.

67. Related file histories also referenced this distinction from the prior art, and the fact that the '591 Patent claims were allowed over it for the reason that the bandwidth availability information can be communicated directly from the Physical Layer to a processing layer in the Data Link Layer. EX2023 ('105 Patent File History) at 9-10, 12/8/2023 Preliminary Amendment and Applicant Remarks (citing to the '591 file history and explaining how similar issues apply); EX2024 ('337 Patent File History) at 11-12, 9/18/2023 Preliminary Amendment and Applicant

Remarks (citing to the '591 file history and explaining how similar issues apply); EX2025 ('414 Patent File History) at 10-11, 9/18/2023 Preliminary Amendment and Applicant Remarks (citing to the '591 file history and explaining how similar issues apply); EX2028 ('564 Patent File History) at 12-13, 4/11/2024 Preliminary Amendment (citing to the '591 file history and explaining how similar issues apply).

68. Moreover, applicant made clear that the actual PHY interfaces are able to directly communicate with the processing interface regarding the bandwidth availabilities of the wireless transceivers. For example, in the prosecution of related U.S. Patent No. 12,169,756, the applicant stated:

> Please note that new claims 16-17 recite that the information provided by the resource monitoring interface to the virtual MAC interface is ***received by the resource monitoring interface either directly from at least one of the first and second actual PHY interfaces or directly from at least one of the first and second actual MAC interfaces***. … The dashed line box surrounding two boxes labelled "MAC" 114 and "PHY" 116 in Figure 1 are schematic representations of the actual MAC and PHY layers of a wireless networking device that includes at least two wireless transceivers. A two-way arrow connects the dashed box with a "process layer" 104. This discloses that ***each actual MAC and each actual PHY in a particular wireless networking device communicates directly with the processing layer to allow it to receive information regarding bandwidth availabilities from the wireless transceiver*** associated with each MAC/PHY pair.

EX2026 ('756 Patent File History) at 7-8, 8/15/2024 Preliminary Amendment and Applicant Remarks. A POSITA would understand from this passage that each actual MAC and each actual PHY can communicate directly with the processing interface.

Because the actual PHY interface can communicate with the processing interface, it can be no higher than the Data Link Layer, the layer adjacent to the Physical Layer. EX2019 (Basic Reference Model), § 7.5.4.2.2. This is also consistent with direct communication between the actual MAC interfaces and the processing interface, because the actual MAC interfaces are also in the Data Link Layer, and a POSITA would understand that communications can take place within the same layer of the protocol stack.

69. The file history for patents in the '933 Patent family also distinguished the prior art by explaining that the processing layer was no higher in the protocol stack than the Data Link Layer (i.e., the layer adjacent to the Physical Layer). *See* EX2023 ('105 Patent File History) at 21, 1/11/2024 Second Preliminary Amendment and Applicant (applicant remarks distinguishing prior art because bandwidth decisions were made "at a layer above the MAC/PHY layers"); *id.* at 34, 2/5/2024 Third Preliminary Amendment and Applicant Remarks (applicant remarks regarding functions "transparent to the layers of the wireless networking device above its MAC/PHY interfaces"); EX2029 ('143 Patent File History) at 12-13, 1/9/2024 Third Preliminary Amendment and Applicant Remarks (applicant remarks distinguishing prior art because routing decisions in the prior art were made above processing layer, or "at a layer above the MAC/PHY layer"); *id.* at 24, 2/5/2024 Fourth Preliminary

Amendment and Applicant Remarks (applicant remarks regarding functions "transparent to the layers of the wireless networking device above its MAC/PHY interfaces"); EX2027 ('177 Patent File History) at 10, 6/18/2024 Preliminary Amendment and Applicant Remarks (applicant remarks noting that claimed "'resource monitoring interface' operates in a processing layer below the logical link layer [i.e., in the MAC sublayer of the Data Link layer] and provides information about the bandwidth availability of the transceivers associated with the actual PHY interfaces"); EX2026 ('756 Patent File History) at 18, 10/11/2024 Amendment and Response to Non-Final Office Action (applicant remarks distinguishing prior art because routing decisions in the prior art were made above processing layer, i.e., at a layer "above the data link layer"); EX2028 ('564 Patent File History) at 24, 6/18/2024 Amendments After Allowance (applicant remarks noting the claims recite a "'resource monitoring interface' [that] operates in a processing layer below the logical link layer and provides information about the bandwidth availability of the transceivers associated with the actual PHY interfaces" to the virtual MAC interface); *id.* at 36, 6/19/2024 Amendments After Allowance (same). From these statements, a POSITA would understand that the processing interface and its components are located in the MAC sublayer of the Data Link Layer (or "MAC layer") at the highest.

70. Taking the information in the file histories together, a POSITA would understand that the processing interface is in the MAC sublayer of the Data Link Layer, and that, therefore, the actual PHY interfaces are in a layer adjacent to the processing interface and its components. Thus, the information regarding the bandwidth availabilities of the wireless transceivers is able to be communicated from the actual PHY interface(s) directly to the processing interface, and is also able to be communicated from the actual MAC interface(s) directly to the processing interface.

71. Altogether, based on the above, a POSITA would understand that the "information regarding the bandwidth availabilities" of the wireless transceivers would necessarily be both current information, and information that could be obtained directly from both the actual PHY interfaces and the actual MAC interfaces.

VIII. ANALYSIS OF CHINCHOLI, RIGGERT, AND CLEGG, AND THE COMBINATION THEREOF

72. Dr. Almeroth opines that claims 1-30 of the '933 Patent are obvious in view of the combination of Chincholi, Riggert, and Clegg (Ground 1). I disagree with Dr. Almeroth's opinions regarding the combination of Chincholi, Riggert, and Clegg, for the reasons discussed below.

A. Opinion on Chincholi Compared to Various Limitations of the '933 Patent Claims

73. I understand that Petitioners and Dr. Almeroth primarily rely on International Application WO2013/126859 to Chincholi, entitled "Opportunistic Radio Access Technology Selection and Aggregation," and which has an international filing date of February 24, 2013 with a publication date of August 29, 2013 (EX1005, or "Chincholi").

74. I understand that Dr. Almeroth opines, and Petitioners assert, that various of the limitations of claim 1 of the '933 Patent are disclosed by Chincholi. I disagree with many of Dr. Almeroth's opinions regarding Chincholi's disclosure, and, for purposes of this declaration, describe certain of my disagreements with Dr. Almeroth below. If required later in these proceedings, I may provide additional opinions regarding my disagreements with Dr. Almeroth and/or the disclosure of Chincholi.

1. "virtual MAC interface"

75. I understand that Dr. Almeroth opines that Chincholi discloses the "virtual MAC interface" of claim 1[e] via its "opportunistic multiple media access control (MAC) aggregation layer" that may reside between the IP layer and the RAT protocol stacks. EX1002, ¶¶103-106; EX1005, Abstract. I disagree.

76. First, I note that, based on my review of Chincholi, Chincholi does not

use the word "virtual" or any variant of "virtual" within its disclosure. *See* EX1005.

77. Second, Dr. Almeroth does not address the meaning of the word "virtual," a term that would have been known and understood to a POSITA by its plain and ordinary meaning. I explain a POSITA's understanding, and how it is consistent with the parties' agreed construction in the district court ("a software- or logical-based interface that is separately addressable from the recited actual MAC interfaces and that obscures the recited actual MAC interfaces from higher protocol stack layers") above in Section VII.A.

78. As explained above, a virtual MAC interface would have a programmed, non-static address. *See, e.g.*, EX1001, Fig. 1; *id.* at 2:63-65. This is unlike Chincholi's OMMA layer. In fact, Chincholi's OMMA layer is not disclosed as being a separately addressable entity at all. A POSITA would understand that Chincholi's OMMA layer acts as a conduit to pass on packets received from different RATs (each with its own actual MAC address), taking multiple inputs and sending them out as one output. EX1005 at [0137]-[0143], [0383].

79. In doing so, Chincholi's OMMA sends aggregated packets to the IP layer with the payload of each packet containing the actual MAC address (a "device address") of the RAT from where it originated. Indeed, a POSITA would understand that the OMMA layer communicates with the RAT protocol stacks, *i.e.*, the MAC

and PHY layers, by using the "device address," some examples of which are a WTRU (wireless transmit-receive unit) or NT (network terminal) address. *Id.*, [0205], Fig. 5. A POSITA would understand that the OMMA layer also communicates to other components at each component's "device address," and that the components of the OMMA layer merely pass this device address along without obscuring it. *See, e.g.*, *id.*, [0142].

80. I understand that Dr. Almeroth opines that a POSITA would have recognized that the OMMA "'virtualizes' a MAC interface, because the OMMA would effectively appear to the IP layer as a single interface for exchanging packets that are ultimately sent or received by the actual MAC-PHY pairs." EX1002, ¶104 (citing EX1005, [0120]). I disagree. A POSITA would understand that a "virtual MAC interface" obscures the actual MAC interface from higher protocol stack layers. The portions of Chincholi that Dr. Almeroth cites only state that the OMMA may "combine[] packets from different RATs." EX1005, [0192]. This does not mean that the actual MAC addresses of the various RATs would be obscured; rather, they would be apparent as the OMMA forwarded them. Dr. Almeroth's description is not inconsistent with this; he merely does not account for the fact that a "virtual" MAC interface must obscure the actual MAC addresses when passing along a communication. Indeed, while Chincholi states that "[t]he OMMA layer may be

transparent," all this means is that it does not "add[] *additional* headers" as it would in "non-transparent" mode. *Id.* A POSITA would not understand the lack of additional headers to be the same as obscuring an actual MAC address, nor would a POSITA understand it as "transparent"—which the parties here agree would mean being unaware of the operation of lower layers *See, e.g.*, EX2020 (Joint Claim Construction Statement) at 2-3 (parties agree that a POSITA would understand "in a manner transparent to any layer of the wireless networking device above the processing interface" to mean "in a manner where any protocol stack layer of the wireless networking device above the processing interface is unaware of the operation of the processing interface").

81. This is in contrast to the '933 Patent, which teaches a virtual layer between the upper layers and the actual MAC and PHY layers. EX1001, 2:56-65. It is that virtual layer that manages the signals between the upper layers, such as the application layer, and the actual MAC and PHY layers. *Id.*, 4:46-49. A POSITA would understand, therefore, that packets are addressed using the virtual MAC address and that the upper layers do not see the actual MAC addresses.

82. I understand that Dr. Almeroth opines that a POSITA would understand the OMMA layer of Chincholi discloses a "virtual MAC interface" because "Chincholi's OMMA layer … includes all of the functionality that the '933 patent

associates with the 'virtual MAC interface.'" EX1002, ¶105. I disagree that a POSITA would understand Chincholi's OMMA layer to be a "virtual MAC interface" because of the functions it performs, and I disagree that Chincholi's OMMA layer performs the same functions as the "virtual MAC interface" of the '933 Patent.

83. A POSITA would understand that Chincholi is missing important functionality conducted by the virtual MAC interface of the '933 Patent. For example, the claimed virtual MAC interface controls the operation and bandwidth allocation decisions with respect to the actual MAC layers below it. EX1001, 2:65-3:1, 3:28-50, 10:35-39. Chincholi states that the OMMA layer is merely "[a] mechanism to aggregate two or more RATs ***operating independently*** on two or more bands to enhance the total IP throughput of the link." EX1005, [0120]. By stating that the RATs operate independently, a POSITA would understand that the RATs are not directed by the OMMA layer—unlike the actual MAC interfaces of the '933 Patent.

84. Dr. Almeroth opines "that the virtual MAC layer comprises the functionality of 'decision,' 'processing,' and 'ultra-streaming' blocks" disclosed in the '105 Patent and compares the functions of those three blocks to three modules within Chincholi's OMMA layer. EX1002, ¶¶103, 105-106. He opines that a

POSITA would understand the traffic shaping module 601 of Chincholi to be the functional equivalent of the '933 Patent's ultra-streaming block; that Chincholi's MAC resource reservation module 602 would be understood to perform the functions of '933 Patent's processing block; and the IP QoS Scheduler module 603 would be understood to be the functional equivalent of the '933 Patent's decision block. *Id*. I disagree that the virtual MAC interface of claim 1 of the '933 Patent can be reduced to these three functions. I further disagree that the modules within Chincholi's OMMA layer that Dr. Almeroth identifies perform the same functions as the blocks within the virtual MAC interface to which Dr. Almeroth compares them.

85. I disagree that a POSITA would have recognized the IP QoS Scheduler to perform the functionality of the '933 Patent's virtual MAC interface's "decision block." *See* EX1002, ¶¶103, 105-106. "The IP QoS Scheduler … may segregate a single IP packet stream comprising multiple IP QoS types into distinct IP QoS streams." EX1005, [0143]. Meanwhile, the decision block determines "the size and type of data being received," as well as the "type of processing necessary to put the stream in a format where it is capable of being transmitted." EX1001, 3:31-34. A POSITA would not understand segregating packet streams to be equivalent to determining the size and type of data being received, nor determining the type of

processing necessary to put the stream in a format for transmission. A POSITA would understand these functions to be distinct, and Dr. Almeroth gives no explanation whatsoever as to why a POSITA would consider them equivalent. *See* EX1002, ¶106.

86. I also disagree with Dr. Almeroth that a POSITA would recognize the MAC resource reservation module of Chincholi's OMMA layer to "fulfill the functionality of the 'processing block' of the '933 Patent's 'virtual MAC interface.'" *Id.* "The MAC Resource Reservation module . . . may determine an amount of time duration and/or spectral fragment/bandwidth required by a packet or a set of packets." EX1005, [0142]. Meanwhile, the processing block of the '933 Patent "processes the data stream as determined by the decision block" in order "to put the stream in a format where it is capable of being transmitted." EX1001, 3:31-36. These two functions are in fact not of the same kind at all—the MAC resource reservation module determines time and resources required; in contrast, the processing block puts the data into a format required for transmission, as determined by the decision block. Therefore, POSITA would not understand these functions to be the same—nor does Dr. Almeroth explain why one would.

87. Finally, I disagree with Dr. Almeroth's opinion that the traffic shaping module of Chincholi performs the functions of the ultra-streaming block of the '933

Patent. EX1002, ¶106. The traffic shaping module of Chincholi's OMMA "may determine the way a packet is routed using policy based routing or feedback based routing." EX1005, [0139]. This can be done in one of two ways—"policy based routing or feedback based routing." *Id.*, [0140]-[0141]. On the other hand, the '933 Patent's ultra-streaming block "manages the processing of signal streams or sub-streams given the available resources (memory, processing speed, number of available radios, etc.), and packetizes sufficiently processed streams or sub-streams," then feeding data to the virtual PHY interface, while also monitoring resource availability. EX1001, 3:36-48. A POSITA would not understand the traffic shaping module to perform the functions of the ultra-streaming block. For example, the disclosure of Chincholi would not indicate to a POSITA that the traffic shaping block performs the packetizing function of the ultra-streaming block. Dr. Almeroth does not provide any explanation to suggest why a POSITA would understand these functionalities to be the same.

88. Further, a POSITA would not understand the components in Chincholi to sit at the same layer of the protocol stack as those in the virtual MAC interface of the '933 patent. As explained, above, a POSITA would understand that the processing interface of the '933 patent must sit in layer 2 (or the data link layer) because components of the processing interface communicate directly with the

physical layer (layer 1). *See supra*, ¶¶56, 64. A POSITA would also understand that the functions of the virtual MAC interface are quintessential layer 2 functions, such as the monitoring function of the ultra-streaming block that a POSITA would understand to be associated with layer 2. *See* EX1001, 3:31-48; *see also, e.g.*, EX2027 ('177 Patent File History) at 10, 6/18/2024 Preliminary Amendment and Applicant Remarks (applicant remarks noting that claimed "'resource monitoring interface' operates in a processing layer below the logical link layer [i.e., in the MAC sublayer of the Data Link layer] and provides information about the bandwidth availability of the transceivers associated with the actual PHY interfaces"). This is consistent with a POSITA's understanding that moving layer 2 functions to layer 3 breaks this layered abstraction and causes architectural and operational problems. The issue is not merely theoretical—it affects efficiency, scalability, and interoperability. On the other hand, it would be clear to a POSITA that each of the three components Dr. Almeroth equates with the components of the virtual MAC are performing layer 3 (network layer) functions. First, Chincholi states that the traffic shaping module is "responsible for determining the way packets are routed." EX1005, [0139]. A POSITA would understand packet routing to be a network layer function because it refers to "packets," as well as how those packets are routed. EX2018 (Tanenbaum) at 42 (noting "name of unit exchanged" at network layer is

"packet"); *id.* at 43 (noting that a key issue for the network layer "is determining how packets are routed"). Second, the MAC resource reservation module determines time and bandwidth resources required "by a packet or set of packets"—again, a network layer function dealing with "packets." *Id.* at 42-43. Finally, the IP QoS Scheduler module states in its name that it is associated with the network layer—which a POSITA would know is also known as the IP layer. EX2018 (Tanenbaum) at 47 (noting that layer 3 may be known as the Internet layer or the IP layer in some protocol stack models). Further, the function of the IP QoS Scheduler module is to "segregate a single IP packet stream comprising multiple IP QoS types into distinct QoS streams," again, a function explicitly associated with layer 3—since it relates to management of IP packet streams. EX2018 (Tanenbaum) at 42-44.

89. Further, a POSITA would recognize that Chincholi's OMMA can communicate directly with the transport layer, in some cases known as the TCP layer. For example, Chincholi states, "[t]he OMMA layer may interface the TCP layer of the stack to receive some of the internal data of the TCP entity." EX1005, [0173]; *see id.*, [0174] ("The OMMA layer may perform packet inspection of the TCP header to deduce the state of the TCP connection."); *see also id.*, [0171]-[0186]; [0369]-[0370]. Because OMMA can communicate with the transport/TCP layer (or

layer 4), a POSITA would understand that the OMMA is in an adjacent layer—i.e., layer 3. EX2019 (Basic Reference Model), § 7.5.4.2.2.

2. "information regarding the bandwidth availabilities of the first and second wireless transceivers"

90. I understand that Dr. Almeroth opines that Chincholi discloses the portion of claim limitation [1.e] disclosing "information regarding the bandwidth availabilities of the first and second wireless transceivers" via Chincholi's traffic shaping module's "feedback based routing" mode, under which "the OMMA transmitter may use measurement metrics fed back from each RAT." EX1002, ¶¶107-108 (citing EX1005, [0139], [0161], Figs. 28-29). I disagree that Chincholi's "feedback routing mode" discloses the "information regarding the bandwidth availabilities…" limitation.

91. First, as described above, a POSITA would understand that the bandwidth availabilities" recited are the "current" or "actual" bandwidth availabilities. *See supra*, ¶61. A POSITA would understand that Chincholi's "feedback routing mode" does not disclose feedback about current bandwidth availabilities, but rather historical statistics and average metrics. For example, Chincholi discloses that the "feedback metrics" it collects "reflect the average state of the system." EX1005 at [0141] ("feedback metrics" reflect "average state of the system"); *id.* at [0161] & Table 2 (describing "average" metrics). A POSITA would

understand "average" to describe a summary of typical conditions measured over a period of time—not the conditions at the current moment. Therefore, a POSITA would not understand the historical, or average, feedback metrics to constitute the "information regarding bandwidth availability" recited by the claim.

92. Second, as explained above (*supra*, ¶88), a POSITA would understand that the OMMA's traffic shaping module, which is "responsible for determining the way packets are routed," to sit in layer 3, or the network layer. EX1005, [0139]. Other parts of Chincholi confirm this, such as Figure 7, which states that OMMA's "'Feedback-Based' scheme implies that OMMA at the transmitter distributes packets per IP flow across RATs based on feedback from lower layers i.e. MAC/PHY." *Id.*, Fig. 7. A POSITA would therefore understand that OMMA, including when performing its feedback routing scheme, sits above the MAC and PHY layers, i.e., in the network layer. Given that OMMA's traffic shaping module and OMMA's feedback routing scheme take place in the network layer (layer 3), a POSITA would understand that there would be no way for the OMMA traffic shaping module to communicate directly with the transceiver resources in the physical layer (i.e., two layers away). This is because a POSITA would understand that one layer may only communicate within its layer and an adjacent layer—and that there is no way for the physical layer to directly communicate with the network

layer. EX2019 (Basic Reference Model), § 7.5.4.2.2 ("Since the Reference Model permits direct interaction only between adjacent layers, the network-entity cannot interact directly with the physical-entity. This interaction is thus described through the Data Link Layer which intervenes transparently to convey the interaction between the Network Layer and the Physical Layer.").

93. As also explained above (*supra*, Section VII.C), the intrinsic record would inform a POSITA that the "information regarding bandwidth availabilities" must be able to be communicated directly from the actual PHY interfaces (in layer 1) as well as the actual MAC interfaces (in layer 2) to the processing interface. Chincholi does not disclose a capacity to communicate directly from the actual PHY interfaces (in layer 1) to the OMMA's traffic shaping module (in layer 3), so Chincholi does not disclose the "information regarding bandwidth availabilities" limitation.

3. "processing interface . . . configured to" perform claimed functions "in a manner transparent to any layer of the wireless networking devices"

94. I understand that Dr. Almeroth opines that Chincholi discloses the claim limitation [1.f] of the '933 Patent, which recites, "wherein the processing interface is configured to, when the wireless networking device is being used, and in a manner transparent to any layer of the wireless networking device above the

processing interface…" to perform four claimed functions.[1] EX1002, ¶114. Dr. Almeroth opines that Chincholi includes this disclosure because Chincholi states that "the OMMA layer may be transparent in that it distributes and/or combines packets from different RATs and forward the packets to the IP layer." *Id.* (quoting EX1005, [0192], [0126]). I disagree that a POSITA would understand this disclosure of Chincholi to demonstrate limitation [1.f].

95. First, as explained above (*supra*, ¶80), a POSITA would not understand Chincholi's "transparent mode" to achieve transparency—i.e., higher layers being unaware of the operation of lower layers. *See, e.g.*, EX2020 (Joint Claim Construction Statement) at 2. Rather, Chincholi's transparent mode merely means that additional headers are not added, which does not lead to the higher layers being

[1] These four claimed functions are, described generally for context and not as a substitute for claim language: (a) the creation of associations between the recipient and the recited actual MAC and PHY interfaces (claim 1[g]); (b) identifying a portion of the bandwidth of the first wireless transceiver (claim 1[h]); (c) evaluating whether that portion is unavailable for communication (claim 1[i]); and (d) using that portion that is not unavailable to transmit the recited data stream to the recipient (claim 1[j]). EX1001, 12:20-40.

unaware of operations. EX1005, [0192].

96. A POSITA, in possession of claim 1 of the '933 Patent, would understand that "the processing interface" of claim 1 performs the four claimed functions "in a manner transparent to any layer of the wireless networking device above the processing interface." EX1001, 12:39-41. A POSITA would also understand that the "processing interface" of claim 1 includes "at least one virtual MAC interface." *Id.*, 12:29-30. Thus, a POSITA would understand that, consistent with the fundamental point of the '933 Patent, the virtual MAC interface allows for the transparent bandwidth decision making in the four claimed functions, obscuring the addresses and operation of the actual MAC and PHY layers to the upper layers. *See, e.g.*, *id.* at Abstract. In this way, through the functioning of the virtual MAC layer, the higher layers receive the information that they are interacting with only one MAC/PHY pair—the virtual MAC interface—rather than the many actual MAC/PHY pairs below the virtual MAC interface:

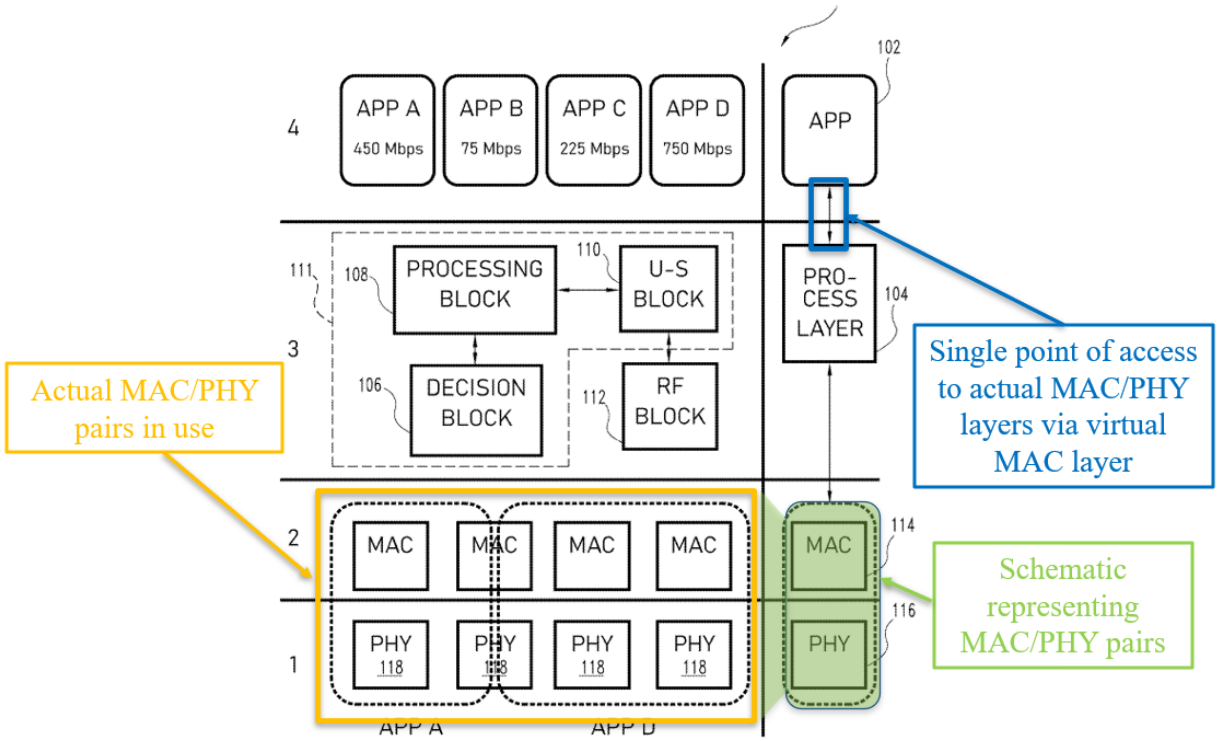

Id. at Fig. 1 annotations added).

97. A POSITA would therefore understand that claim 1 of the '933 Patent requires transparency achieved by a processing interface that includes a virtual MAC interface, and where the virtual MAC interface is what allows for the claimed functions to be performed "in a manner transparent to any layer of the wireless networking device above the processing interface." *Id.*, 12:37-62. Thus, though a POSITA would understand that Chincholi discloses a transparent mode, a POSITA would also understand that Chincholi—lacking a virtual MAC interface—does not disclose the processing interface of the '933 Patent that performs the claimed functions "in a manner transparent to any layer of the wireless networking device

above the processing interface." *See* Section VIII.A.1.

98. A POSITA would also understand that Chincholi discloses transparency only above layer 3, because its discussion of transparency relates to layer 3 functionality of the distribution of packets. EX1005, [0912] ("The OMMA layer may be transparent in it distributes and/or combines packets from different RATs and forwards the packets to the IP layer."). On the other hand, a POSITA would understand that the '933 patent discloses a processing interface at layer 2—and transparency above the processing interface would mean transparency above layer 2. *See supra*, Section VII.C; EX2023 at 34, 2/5/2024 Third Preliminary Amendment and Applicant Remarks (applicant statements that claimed functions were "transparent to the layers of the wireless networking device above its MAC/PHY interfaces").

4. "wherein … the wireless networking device's utilization of the first available bandwidth portion of the first wireless transceiver does not prevent any wireless networking device devices from utilizing a range of frequencies corresponding to the remaining portion of the bandwidth availability of the first wireless transceiver…"

99. I understand that Dr. Almeroth opines that Chincholi discloses limitation [1.k] of the '933 Patent, which recites, "wherein … the wireless networking device's utilization of the first available bandwidth portion of the first wireless transceiver does not prevent any wireless networking device devices from

utilizing a range of frequencies corresponding to the remaining portion of the bandwidth availability of the first wireless transceiver for data transmission or reception purposes at the same time that the first bandwidth portion is being used for data transmission purposes." EX1002, ¶¶138-143. I disagree.

100. Limitation [1.k] recites that a first device's utilization of the first available bandwidth portion of the recited transceiver "does not prevent" any other device from using the remaining portions of the that first available bandwidth portion at the same time. EX1001, 12:63-13:6. I understand that the parties in the district court agreed that this term can be understood by its plain and ordinary meaning, and I agree. A POSITA would understand the plain and ordinary meaning to be that two devices or two applications could share a single MAC/PHY pair at the same time. This functionality is depicted in Figure 1 of the '933 Patent, where App A (green) and App D (blue) are shown sharing the use of the second MAC/PHY pair:

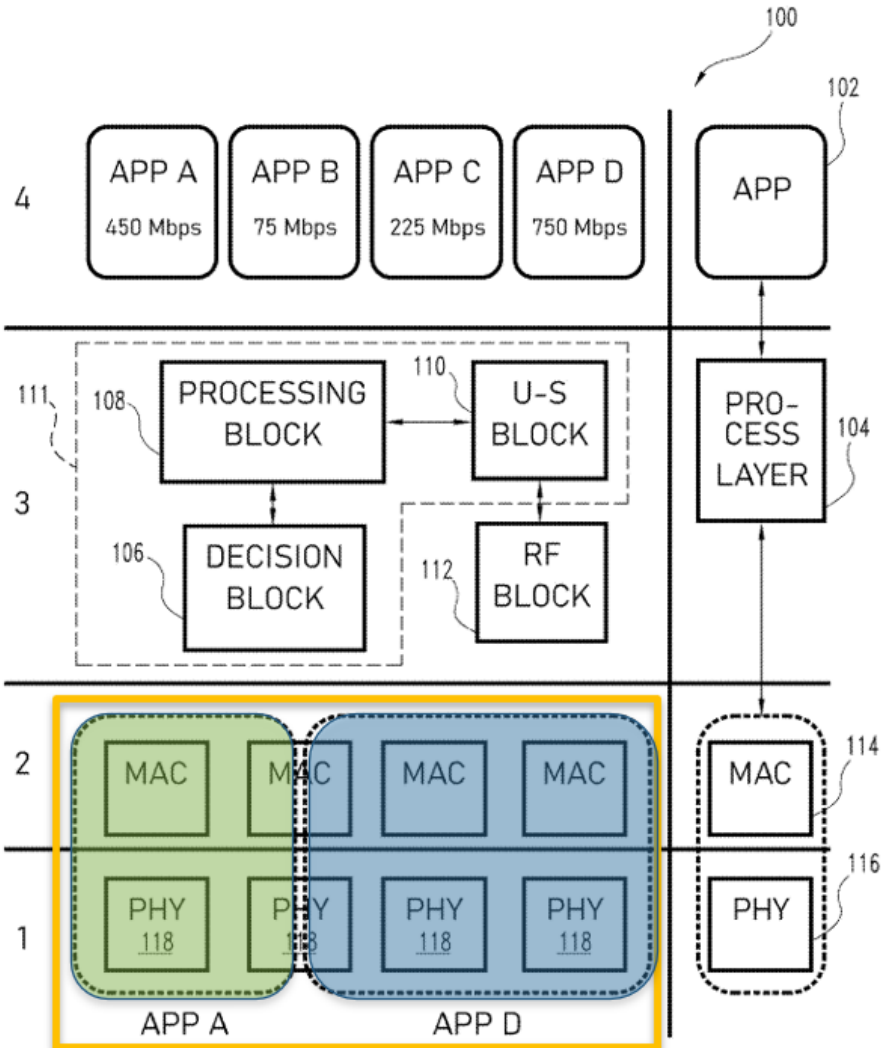

EX1001, Fig. 1 (annotations added). A POSITA would understand that this ability to share a single transceiver's bandwidth among two separate users denoted by the use of different applications is a key benefit of the '933 Patent's invention.

101. Dr. Almeroth points to Chincholi's disclosure of "multi-WTRU multi-IP flow cases" and systems that "may comprise multiple WTRUs." EX1002, ¶140 (citing EX1005 at [0328], Fig. 3). I disagree that this disclosure from Chincholi

shows an ability of one transceiver to be shared between applications or devices. A system comprising multiple WTRUs and where packets are queued and distributed sequentially is not necessarily a system where a single transceiver's resources are shared simultaneously. Instead, Chincholi makes clear that its architecture allows only one WTRU to access a channel at a time, since the WTRUs "may ***contend with each other***" for channel access if they share an operating frequency. EX1005, [0117]; *see also id.* [0130] ("WTRUs 315 operating on a particular spectral band may contend with each other for wireless medium access."); *id.* [0119] ("delay per channel may be high due to contention among WTRUs"). A POSITA would understand that where the WTRUs communicating on the same band are "contending" for channel access, the winner of the contention "locks out" the others from using that channel at the same time. Given this contention, which causes lock out, a POSITA would understand that the various WTRUs of Chincholi do not share the channel bandwidth at the same time.

102. To the extent Chincholi discloses that "[a] WTRU may be able to communicate (e.g., simultaneously) with a NT over, for example, an ISM channel and a TVWS channel" (EX1005, [0117]), such capability exists only where the two WTRUs are using different bands. A POSITA would understand that Chincholi teaches either operating on different bands or "contending" for the transceiver—but

not teach sharing bandwidth at the transceiver.

103. I understand that Dr. Almeroth further opines that Chincholi discloses this limitation because "Chincholi's OMMA layer receives feedback metrics from each RAT," including the "MAC Type" "OFDMA." EX1002, ¶142. A POSITA would understand that OFDMA, or "Orthogonal Frequency Division Multiple Access" is a technology that is only incorporated into certain wireless standards—*e.g.*, Wi-Fi 6 (IEEE 802.11ax) and later, which was officially certified in 2019. Chincholi cites only older versions of the standard—including 802.11 a/b/g/n, which were certified in 2009 or before. EX1005, [0116]. These versions of the standard do not implement OFDMA. Nor does any part of Chincholi, including the text and figures of its specification, describe any deviation or variation from those standards, or how to modify its Wi-Fi only WTRUs to implement OFDMA. Therefore, a POSITA would not understand Chincholi to demonstrate use of OFDMA.

5. "without requiring disassociation of the recipient from … MAC and PHY interfaces"

104. I understand that Dr. Almeroth opines that Chincholi discloses transmission of a data stream "without requiring 'disassociation' of the recipient from … MAC and PHY interfaces." EX1002, ¶137. I disagree.

105. I understand that the parties in the district court agreed that this term would be understood by its plain and ordinary meaning and I agree. EX2020 at 4.

A POSITA would understand that limitation [1.j] and its claim language "without requiring disassociation" indicates that claim 1 of the '933 Patent does not operate based on a concept known colloquially as "break before make." To transmit data over a network, there needs to be an association between the transmitter and receiver of the data. In prior art Wi-Fi networks, when a decision was made to switch from one transmitter/receiver operating on one band to a different transmitter/receiver on a different band, or from one channel in one band to different channel on that band, the current association had to be broken before a new association could be created. This—"break before make"—was necessary to reduce interference. However, the process of breaking and creating a new association can cause delay and latency as a new association is created.

106. The '933 Patent avoids the need to "break before make" in these type of situations by employing the virtual MAC interface. That interface provides a single, consistent MAC address for accessing the corresponding physical layer for which it is responsible, and in so doing, avoids the delay and latency associated with "break before make."

107. A POSITA would not understand that Chincholi adopts the '933 Patent's "without disassociating" functionality, and would rather understand Chincholi to employ the typical "break before make" functionality. Chincholi

discloses that, in a "dynamic RAT switching mode," "the OMMA layer 1300 may select the best RAT possible... and not use the remaining RATs"—and wherein "a RAT with the low channel quality may be ***disabled***." EX1005, [0154]-[0155]. A POSITA would understand this to mean that, once a different RAT is chosen, the previous one is effectively released or disabled. A POSITA would understand that "disabling" a RAT would involve the OMMA layer disassociating from that RAT at the MAC/PHY level. A POSITA would also recognize that this is consistent with other portions of Chincholi that discuss "enabl[ing]" "RATs at different times" based on availability as indicating that OMMA would disassociate from RATs to make them available. *Id.* at [0207]. A POSITA would understand this disassociating before forming a new association discussed throughout Chincholi to be the conventional "break before make" methodology—and not the novel transmission of a data stream "without requiring disassociation of the recipient from … MAC and PHY interfaces" claimed by the '933 Patent.

B. Opinion on the Combination of Chincholi and Riggert and the Disclosure of Riggert

108. I understand that Dr. Almeroth opines that a POSITA would be motivated to combine Chincholi with U.S. Patent App. Pub. No. 2011/0320625 (EX1006, "Riggert"), and that Riggert includes disclosure of certain of the limitations of the claims of the '933 Patent. EX1002, ¶¶68-73, 109-115. For at least

the reasons below, I disagree.

109. I understand that Dr. Almeroth opines that "details regarding the implementation of virtual PHY interfaces is disclosed by Riggert," including through its "bondable virtual interface," and that "a POSITA would have been motivated to combine Riggert's implementation of virtual PHY interfaces into the OMMA Controller of Chincholi for the purposes of receiving the feedback statistics…." *Id.*, ¶¶ 109, 111-112. I disagree.

110. Riggert discloses a system related to "network streaming," for example, a video streaming service like Netflix. EX1006 at [002]. A POSITA would understand that, in the system of Riggert, the "bondable virtual interfaces" are used for actual transmission of data (streaming video). EX1006, Fig. 5, [0057]-[0058]. This transmission would be across devices—for example, between the Netflix application server and the Netflix application on a user's device. This is shown in Figures 8 and 9 of Riggert, where the bondable virtual interface 236 receives data from an "application" 230 (streaming application on a server) and transmits it to bondable virtual interface 336, where it is then sent to the application 330 (streaming application on a user device):

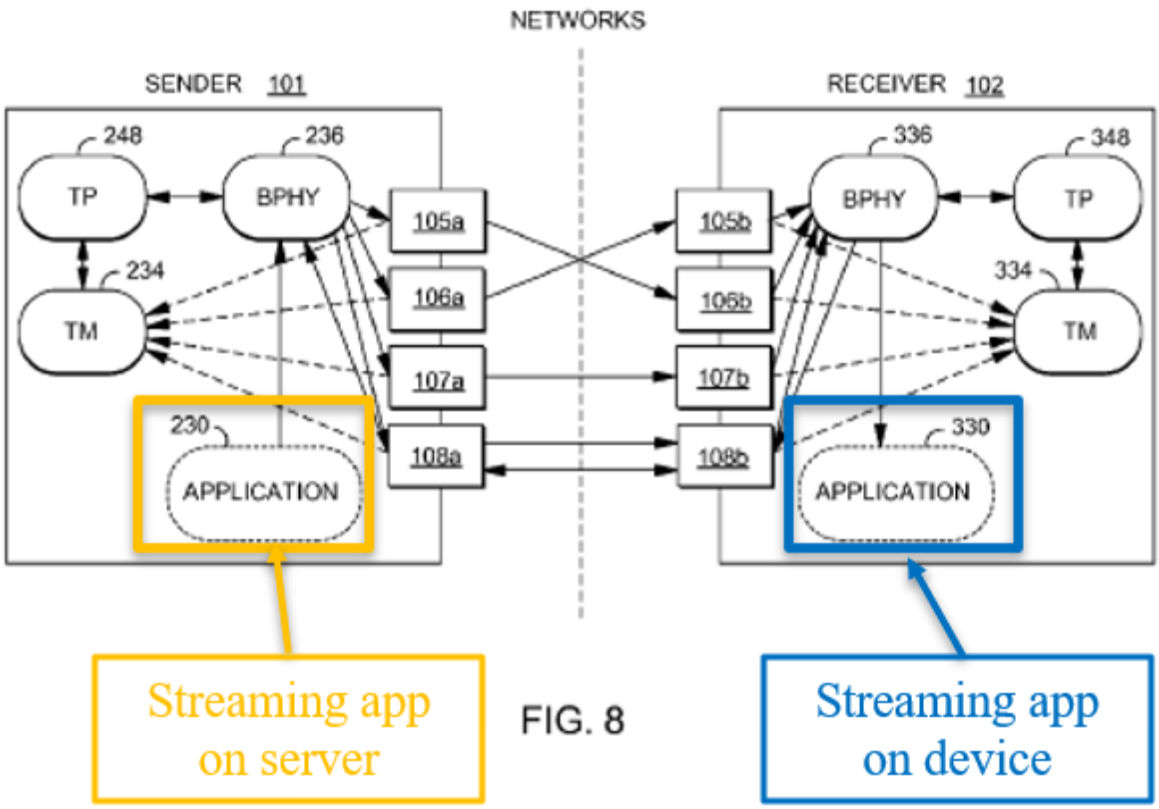

FIG. 8

EX1006, Fig. 8 (annotations added). A POSITA would understand that any feedback that is transmitted by the system of Riggert would be across these devices. Riggert states, "[a]s shown in FIG. 8, application program 230 provides data to the bondable virtual interface 236." *See* EX1006, [0113]. A POSITA would also understand that the bondable virtual physical interface 336 of Riggert operate at the application layer (or layer 7) of the protocol stack. Riggert states "[t]he bondable virtual interface 336 sends the combined data to the application program 330." *See* EX1006, [0114].

111. This is in contrast to Chincholi, which, to the extent it discloses

feedback transmission at the OMMA layer, only discloses collection of data within a single device, and at layer 3. EX1005, [0161]; *see supra*, ¶80, 98. A POSITA would not be motivated to modify the OMMA of Chincholi (with only intra-device feedback transmission, at layer 3) with the bondable interfaces of Riggert (transmitting data across devices, at layer 7). Dr. Almeroth provides no explanation for why the bondable virtual interfaces of Riggert should be added to the OMMA Controller to perform a function different from what Chincholi describes and at a different layer. A POSITA would not be motivated to combine different functions, especially when those functions are carried out by different layers of the protocol stack. Therefore, a POSITA would not look to Riggert to modify Chincholi.

112. I understand that Dr. Almeroth opines that a POSITA would have been motivated to implement a Riggert's "bondable virtual interface" "between the OMMA layer and the RATs in Chincholi." EX1002, ¶¶70-71. I disagree for the reasons stated herein that a POSITA would be so motivated. But I also disagree that the combination Dr. Almeroth suggests amounts to the claimed "virtual PHY interface." The OMMA layer of Chincholi sits at layer 3 of the protocol stack. *See supra*, ¶88. A POSITA would further understand that the RATs of Chincholi sit at layers 1 and 2 of the protocol stack, and that a MAC service access point (or "MAC SAP") would be at the top of the RAT, to allow communication between the RATs

and the higher layers. The MAC SAP would serve as the end of layer 2—and anything above that would be understood to be layer 3. When Dr. Almeroth opines that a POSITA would be motivated to implement Riggert's "bondable virtual interface" "***between the OMMA layer and the RATs***," a POSITA would understand that to be above the RAT's MAC SAP, and therefore, out of layer 2 and into layer 3. If the virtual bondable interface is implemented in OMMA within layer 3, it cannot be the claimed virtual PHY interface, because the virtual PHY interface must have the capacity to be fed information regarding the bandwidth availabilities of the wireless transceivers directly from the actual PHY interfaces in layer 1. *See* EX1001, 12:29-36; Section VII.C, *supra*. A structure in layer 3 cannot directly communicate with the actual PHY interfaces in layer 1; therefore, it cannot be the claimed virtual PHY interface. *See* EX2019 (Basic Reference Model), § 7.5.4.2.2.

113. I understand that Dr. Almeroth opines that it would be beneficial to modify Chincholi with Riggert to achieve "[v]irtualization of the physical interface." EX1002, ¶109. Dr. Almeroth suggests that this virtualization of network elements was well-known and appreciated, including through citation to a "background reference" that is not asserted as part of Ground 1, U.S. Patent Application 2009/0141691 to Jain (EX1007). Were that to have been the case, Chincholi would have included a virtual PHY interface in his invention, especially if Dr. Almeroth is

correct that Chincholi includes an OMMA that "act[s]" like a virtual MAC interface. EX1002, ¶104. But, even assuming OMMA "acts" virtually, Chincholi did not see that his system needed any improvement, or that such improvement could be achieved through the use of "further" virtual elements. A POSITA, similar to Chincholi, would have seen no reason to modify Chincholi with additional "virtualization," and would not have been motivated to combine Chincholi with Riggert for this reason.

C. Opinion on the Combination of Chincholi/Riggert and Clegg and the Disclosure of Clegg

114. I understand that Dr. Almeroth opines that a POSITA would be motivated to combine Chincholi/Riggert with U.S. Patent No. 9,055,592 to Clegg (EX1009, or "Clegg"). EX1002, ¶¶75, 130-138. I disagree.

115. Dr. Almeroth opines that "a POSITA would have recognize Clegg's teachings could be implemented into Chincholi without technical challenge." *Id.*, ¶75. I disagree. Clegg is directed to "[w]ireless communication under IEEE 802.11 standards utilizing carrier specific interference mitigation," and specifically, via the employment of "an ultra-wideband tuner." EX1009 at Abstract; *id.* at 9:60-10:13. A POSITA would understand that, according to the FCC, an "ultra-wideband tuner" requires fractional bandwidth of equal to or greater than 20% or where the absolute bandwidth is at least 500 MHz. *See* 47 C.F.R. § 15.503(d) (2002). A POSITA would

understand that Chincholi and Riggert employ typical transceivers that communicate on single Wi-Fi bands under the prevailing wireless standards. *See* EX1005, [0118] (referencing 2.4GHz and 5 GHz bands); EX1006, [0057]. A POSITA would also know that these standards are not ultra-wideband—a 2.4GHz band has a bandwidth of 83.5 MHz and a 5 GHz band has a bandwidth of 160 MHz. Therefore, a POSITA would understand that Chincholi/Riggert would not utilize an ultra-wideband tuner, and would further understand that combining Clegg, and its ultra-wideband tuner, with Chincholi and Riggert would necessitate extensive technical reworking. Consequently, a POSITA would not look to Clegg to modify Chincholi and/or Riggert.

116. Dr. Almeroth opines that Clegg discloses the "without requiring disassociation" limitation of claim 1 ([1.j]). EX1002, ¶¶134-135. Dr. Almeroth relies on the fact that "Clegg teaches a capability for 'notching out' specific OFDM subcarriers that suffer an unduly high amount of interference." *Id.*, ¶135. I disagree. This disclosure has nothing to do with "make before break," and OFDM and all standards referenced in Clegg only operate on a "break before make" basis. Clegg does not have any disclosure of any deviations from specifically mentioned standards to implement make before break or OFDMA.

117. Clegg employs the prior art "break before make" norm. Clegg states

that, an access point or user equipment will "take steps necessary to … prepare [] communication using the candidate carriers," which "may involve tuning to the appropriate carriers." *See* EX1009 at 11:4-22. A POSITA would understand that this process of tuning the carriers in order to prepare for communication would require "breaking before making," because the POSITA would recognize this means that the system was routing other inter-cell and intra-cell traffic away from the candidate carriers and tuning to the new carriers only after they are confirmed acceptable. This informs a POSITA that existing traffic must be moved first (broken), then the new carriers are prepared (made). A POSITA would recognize that when the access point/user equipment sends a list of candidate carriers, the peer then has to first check if those carriers are available, and then, if yes, prepare the modulation timing for those carriers. The process does not involve *immediate parallel preparation*; instead, it's conditional and stepwise. That informs a POSITA of break-before-make signaling, because the other apparatus must first free up those carriers (*i.e.*, move traffic away), tune and configure them, and only then acknowledge or refine the set. This informs a POSITA of a gap during which the carriers are not yet usable for communication. That gap is understood by a POSITA to define "break before make."

118. Because Clegg does not itself disclose "break before make," a POSITA

would be unmotivated to combine Chincholi/Riggert with Clegg to achieve the "without disassociating" limitation of claim 1 of the '933 Patent, since none of those references teaches that functionality. On the other hand, even if Dr. Almeroth were correct that Chincholi "does not 'require' disassociation" " (EX1002, ¶136) (I disagree with him), a POSITA would not look to combine Clegg with Chincholi, since Clegg is break before make. In either case, therefore, a POSITA would not be motivated to combine Clegg with Chincholi/Riggert.

I hereby declare that all statements made herein of my own knowledge are true and that all statements made on information and belief are believed to be true; and further that these statements are made with the knowledge that willful false statements and the like so made are punishable by fine or imprisonment, or both, under Section 1001 of Title 18 of the United States Code.

Executed on March 16, 2026 in Dallas, Texas.

Robert Akl

Dr. Robert Akl, D.Sc.