US 20030005399A1

(19) United States

(12) Patent Application Publication (10) Pub. No.: US 2003/0005399 A1

Igarashi et al. (43) Pub. Date: Jan. 2, 2003

(54) LAYOUT DESIGN SYSTEM, LAYOUT DESIGN METHOD AND LAYOUT DESIGN PROGRAM OF SEMICONDUCTOR INTEGRATED CIRCUIT, AND METHOD OF MANUFACTURING THE SAME

(76) Inventors: **Mutsunori Igarashi**, Yokohama-shi (JP); **Takashi Mitsuhashi**, Fujisawa-shi (JP)

Correspondence Address:
GARY CARY WARE & FREIDENRICH LLP
1755 EMBARCADERO ROAD
PALO ALTO, CA 94303-3340 (US)

(21) Appl. No.: 10/122,402

(22) Filed: Apr. 12, 2002

(30) Foreign Application Priority Data

Apr. 13, 2001 (JP) P2001-115780

Publication Classification

(51) Int. Cl.[7] G06F 17/50

(52) U.S. Cl. 716/8

(57) ABSTRACT

A layout design system of a semiconductor integrated circuit, comprising: a library information storage unit configured to register a basic via shape list; a technology database storage unit configured to register a list expressing an optimum wire terminating process for each via shape of said basic via shape list registered in said library information storage unit; and a central processing control unit configured to refer to the lists respectively registered in said library information storage unit and said technology database storage unit, select an optimum line processing, and execute a line design.

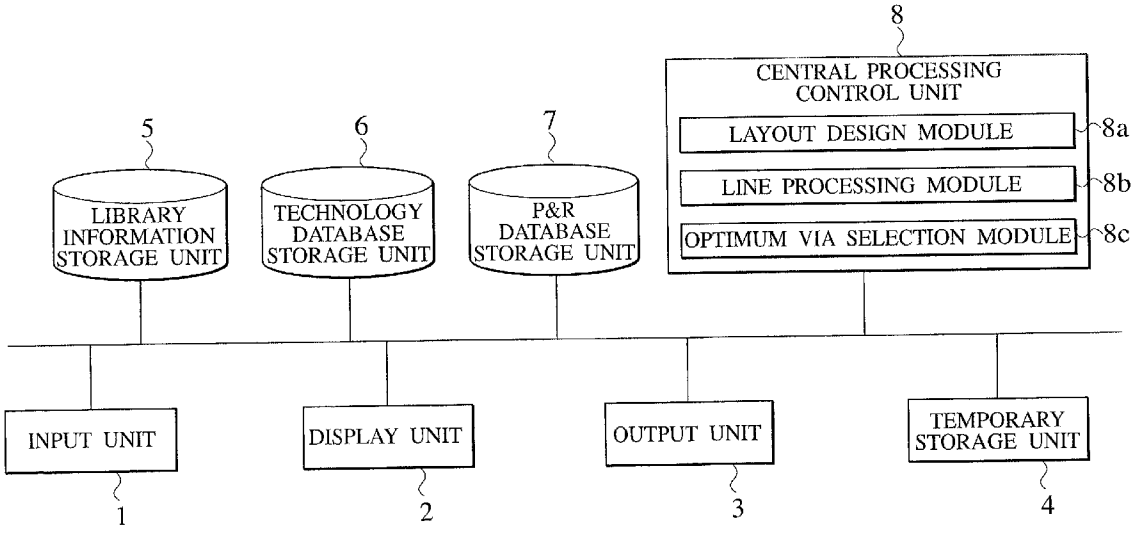

FIG.1A

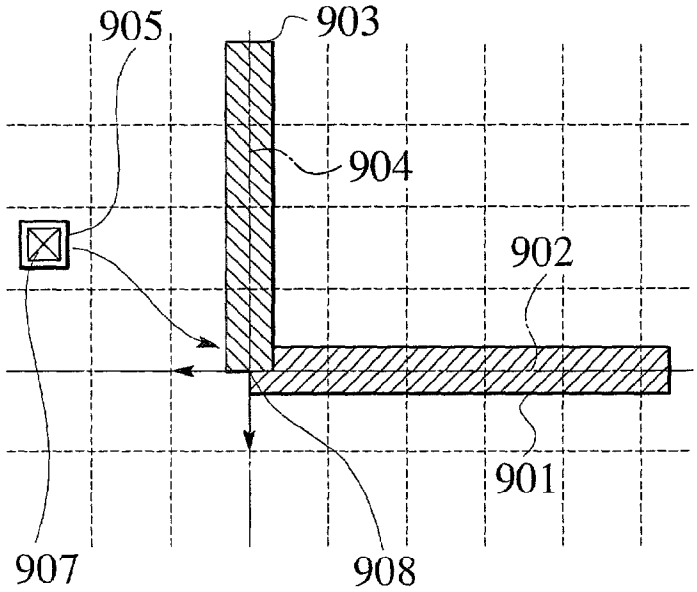

FIG.1D

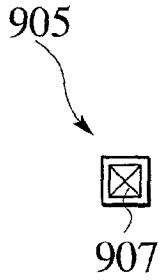

FIG.1E

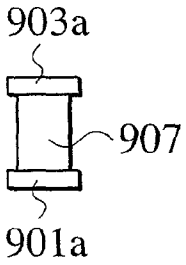

FIG.1B

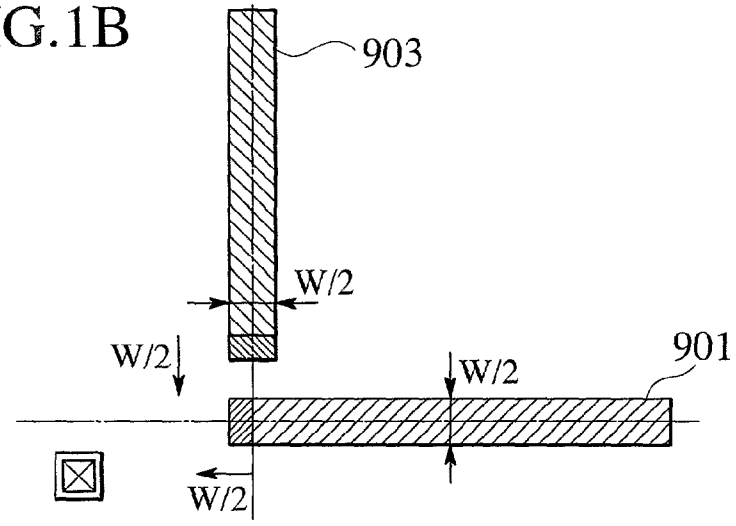

FIG.1C

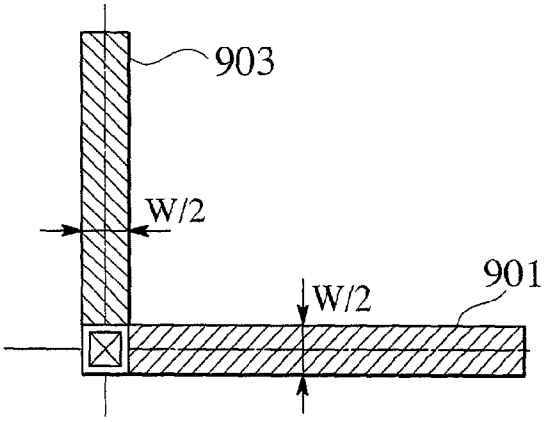

FIG.2

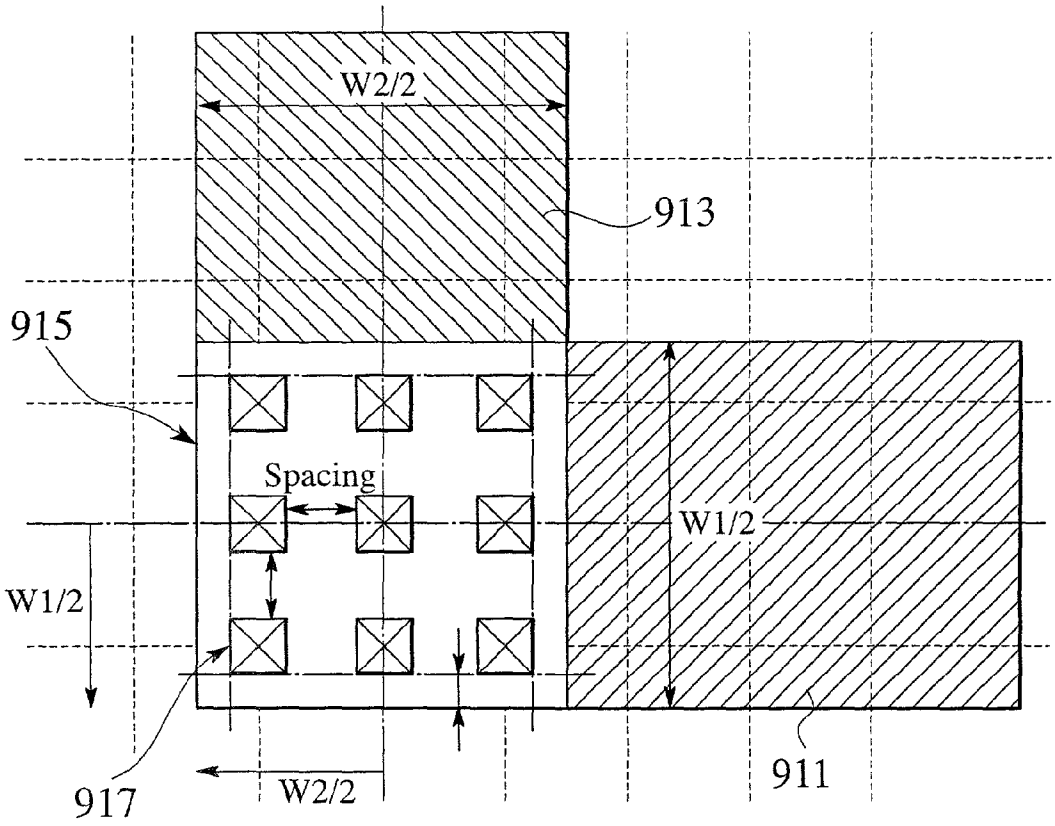

FIG.3

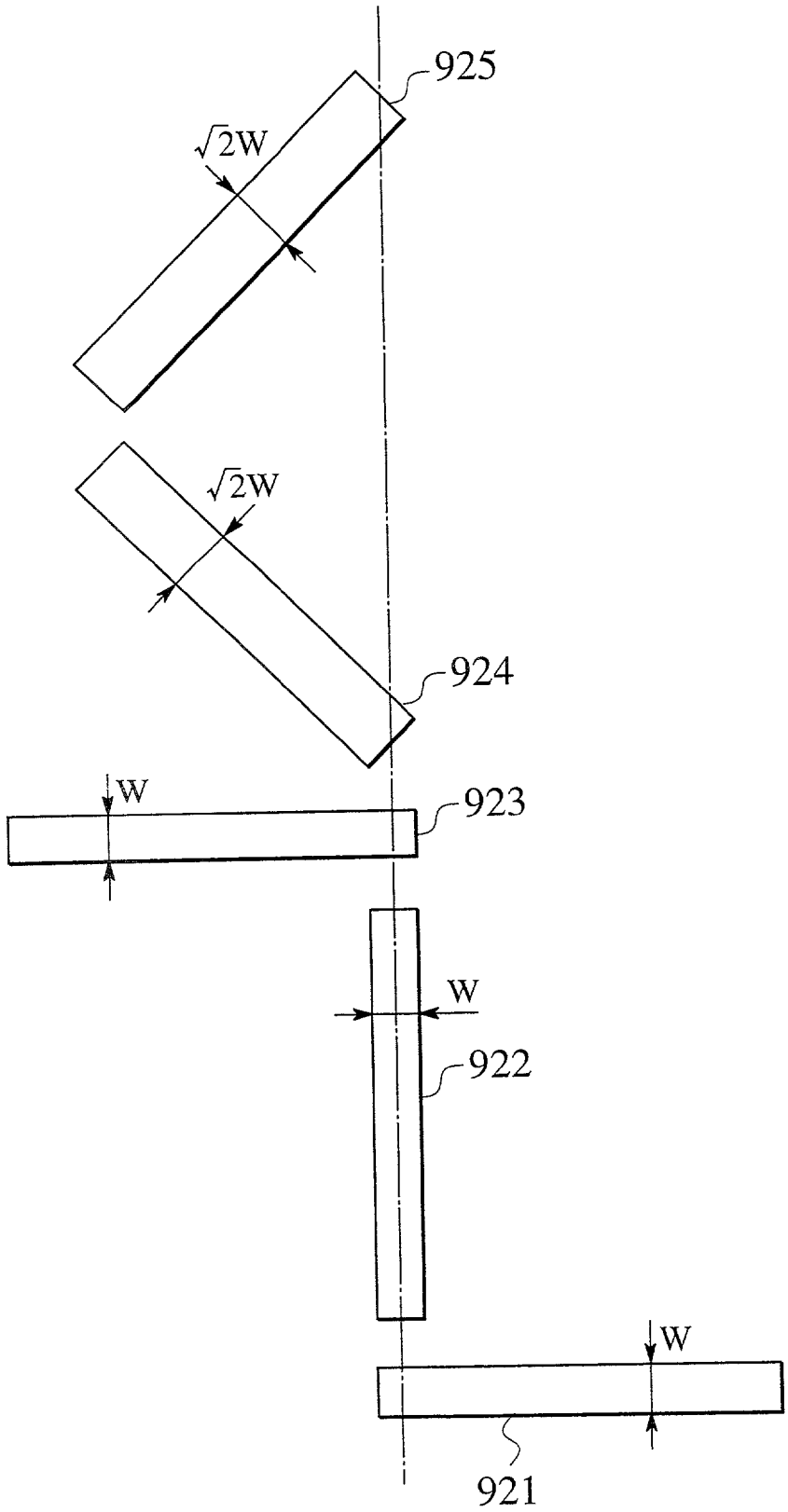

FIG.4A

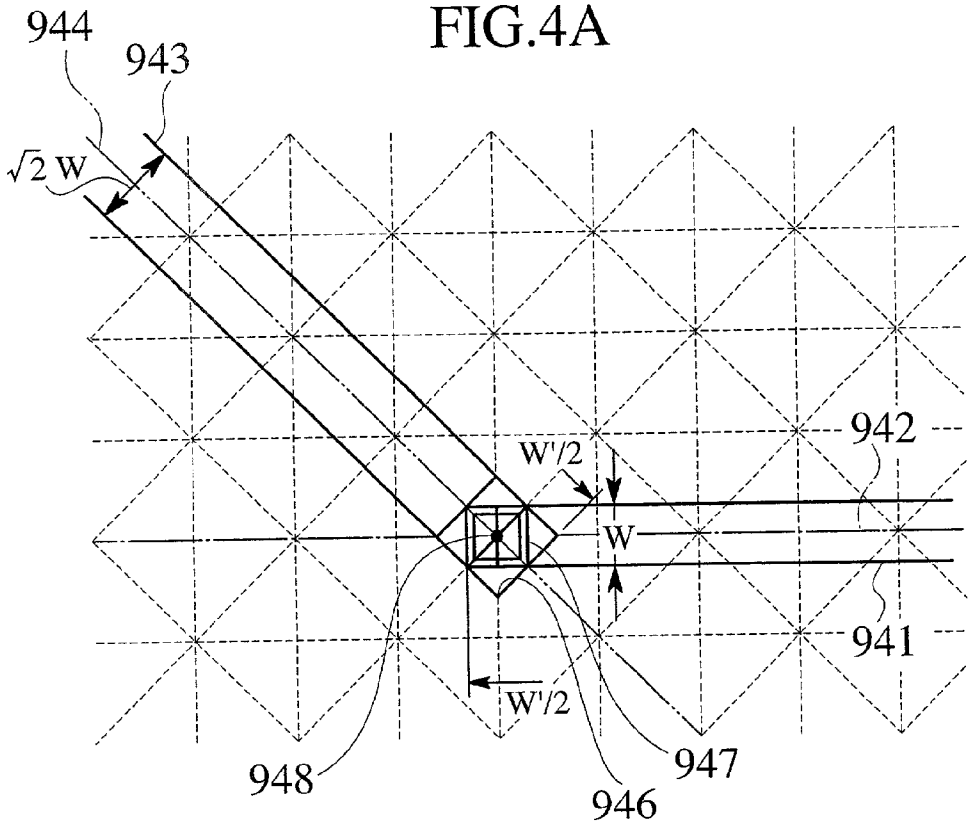

FIG.4B

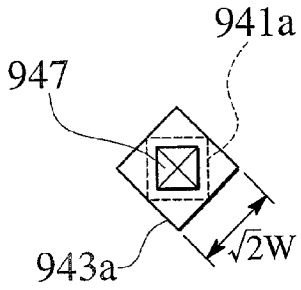

FIG.4C

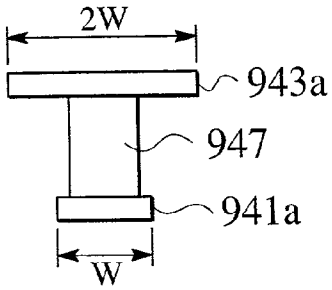

FIG.5A

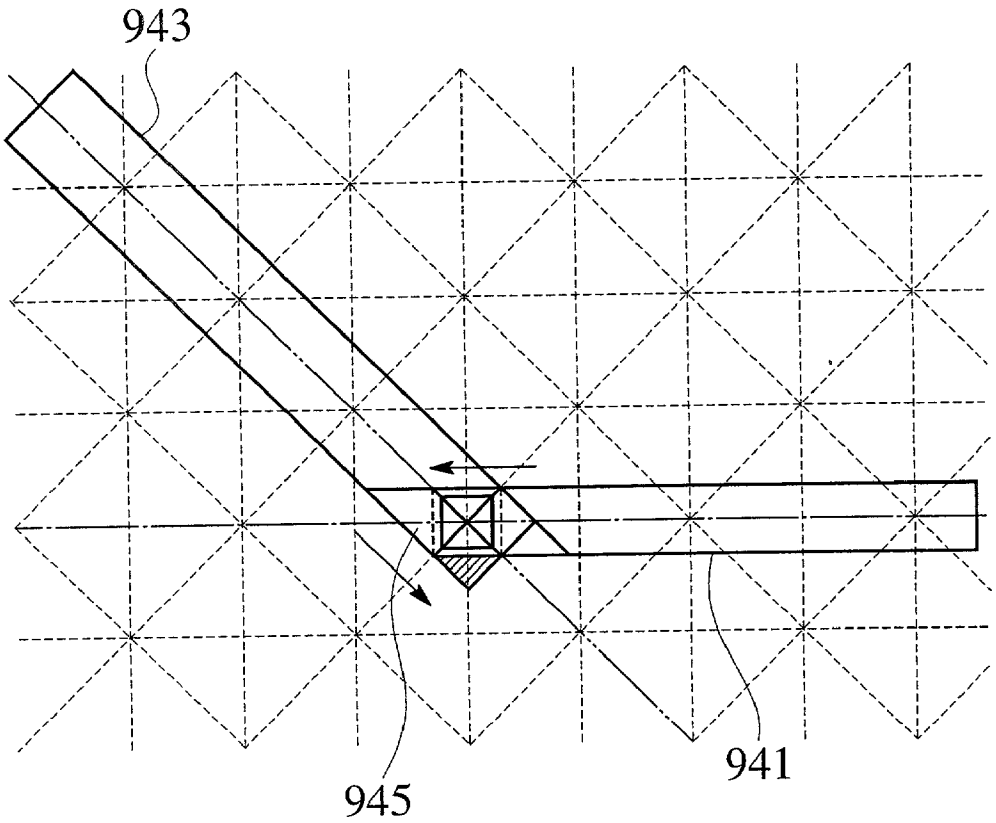

FIG.5B

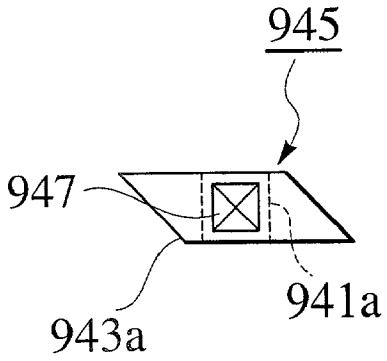

FIG.5C

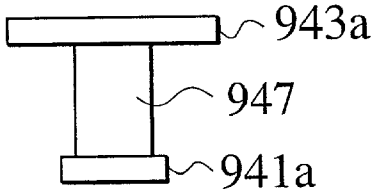

FIG.6

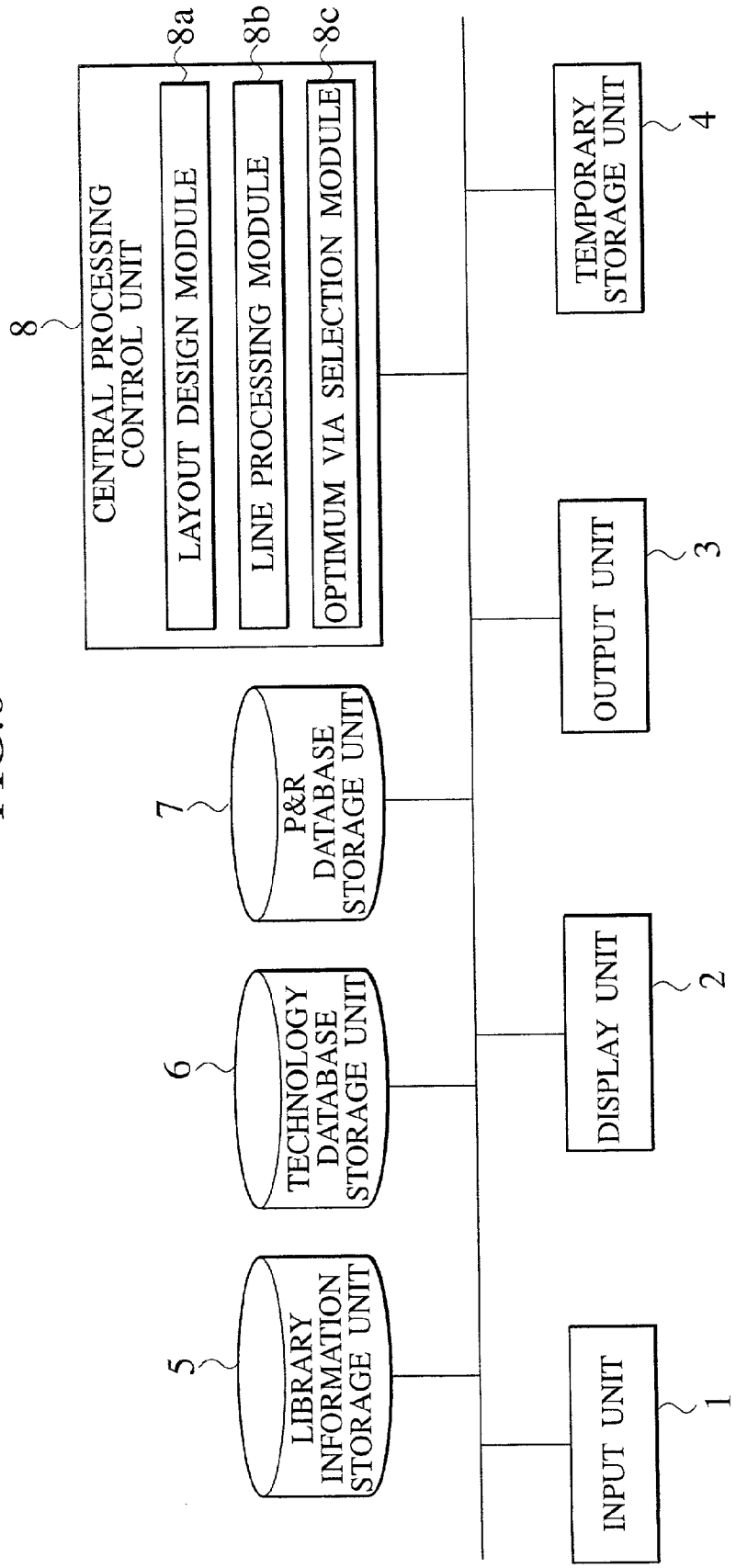
8
CENTRAL PROCESSING CONTROL UNIT
8a
LAYOUT DESIGN MODULE
8b
LINE PROCESSING MODULE
8c
OPTIMUM VIA SELECTION MODULE
7
P&R DATABASE STORAGE UNIT
6
TECHNOLOGY DATABASE STORAGE UNIT
5
LIBRARY INFORMATION STORAGE UNIT
TEMPORARY STORAGE UNIT
4
OUTPUT UNIT
3
DISPLAY UNIT
2
INPUT UNIT
1

FIG.7

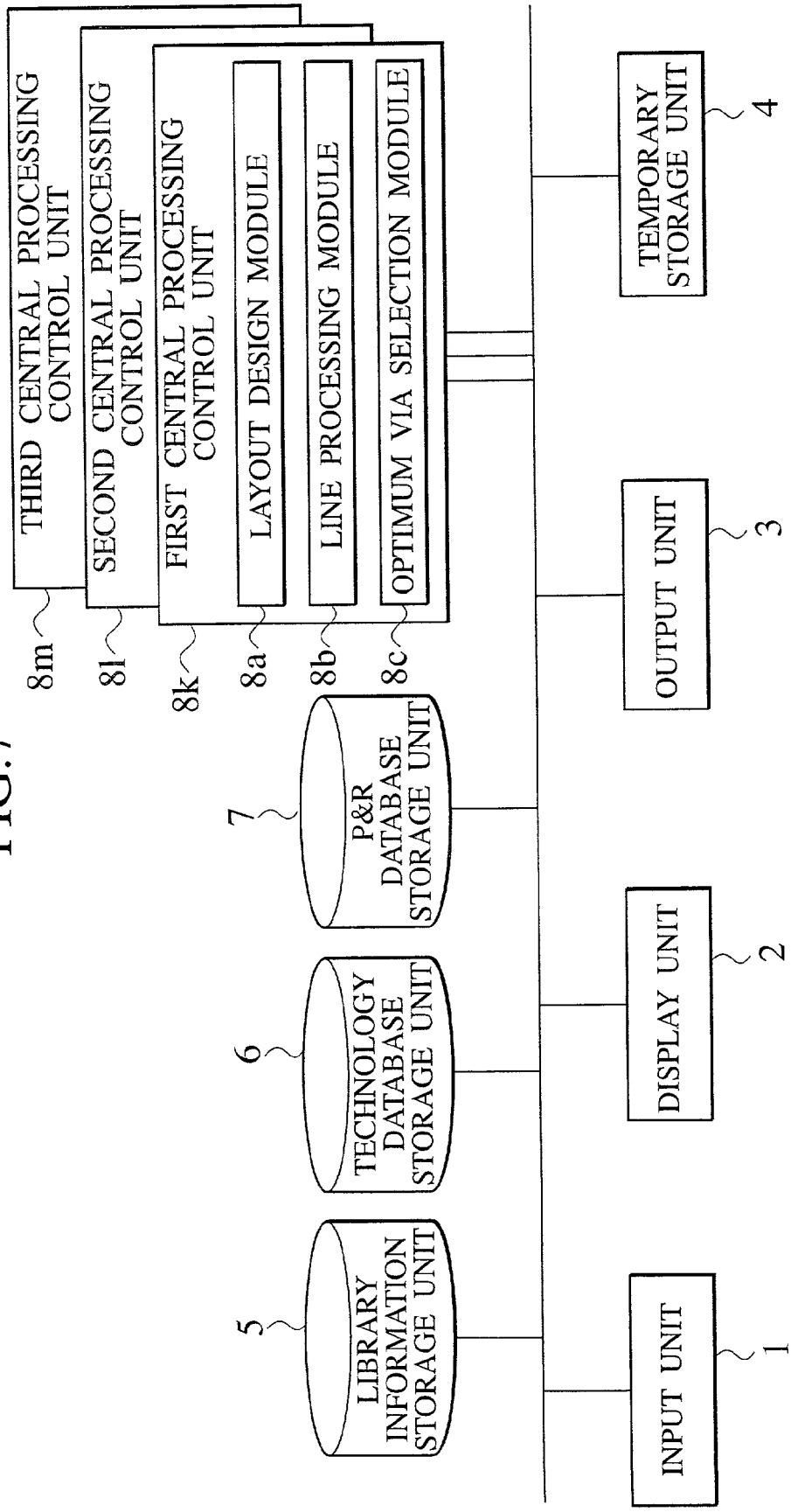
THIRD CENTRAL PROCESSING CONTROL UNIT
SECOND CENTRAL PROCESSING CONTROL UNIT
FIRST CENTRAL PROCESSING CONTROL UNIT
LAYOUT DESIGN MODULE
LINE PROCESSING MODULE
OPTIMUM VIA SELECTION MODULE
8m
8l
8k
8a
8b
8c
LIBRARY INFORMATION STORAGE UNIT
5
TECHNOLOGY DATABASE STORAGE UNIT
6
P&R DATABASE STORAGE UNIT
7
INPUT UNIT
1
DISPLAY UNIT
2
OUTPUT UNIT
3
TEMPORARY STORAGE UNIT
4

FIG.8

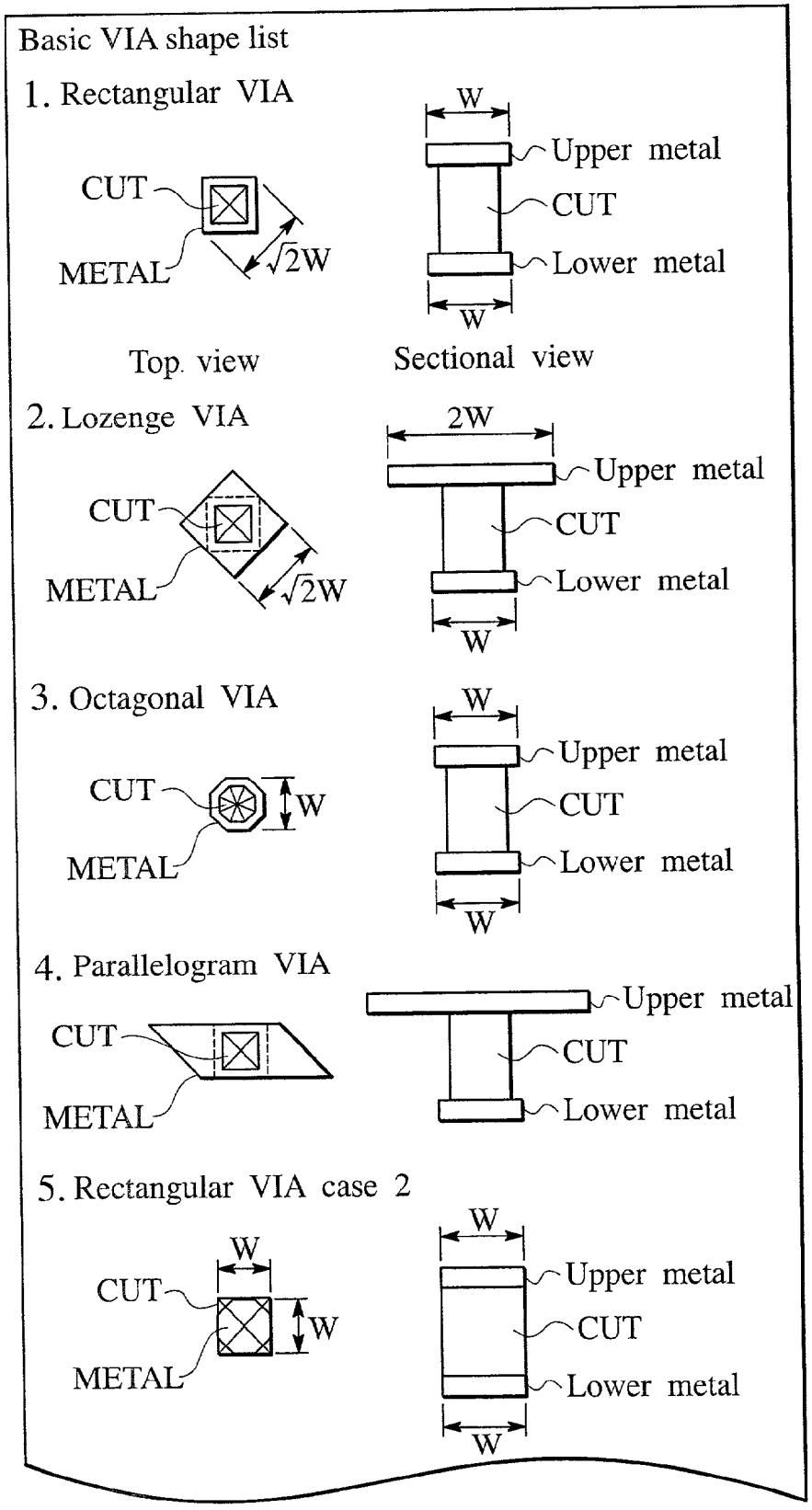
Basic VIA shape list
1. Rectangular VIA
CUT
METAL
√2W
Top view
W
Upper metal
CUT
Lower metal
W
Sectional view
2. Lozenge VIA
CUT
METAL
√2W
2W
Upper metal
CUT
Lower metal
W
3. Octagonal VIA
CUT
W
METAL
W
Upper metal
CUT
Lower metal
W
4. Parallelogram VIA
CUT
METAL
Upper metal
CUT
Lower metal
5. Rectangular VIA case 2
W
CUT
W
METAL
W
Upper metal
CUT
Lower metal
W

FIG.9

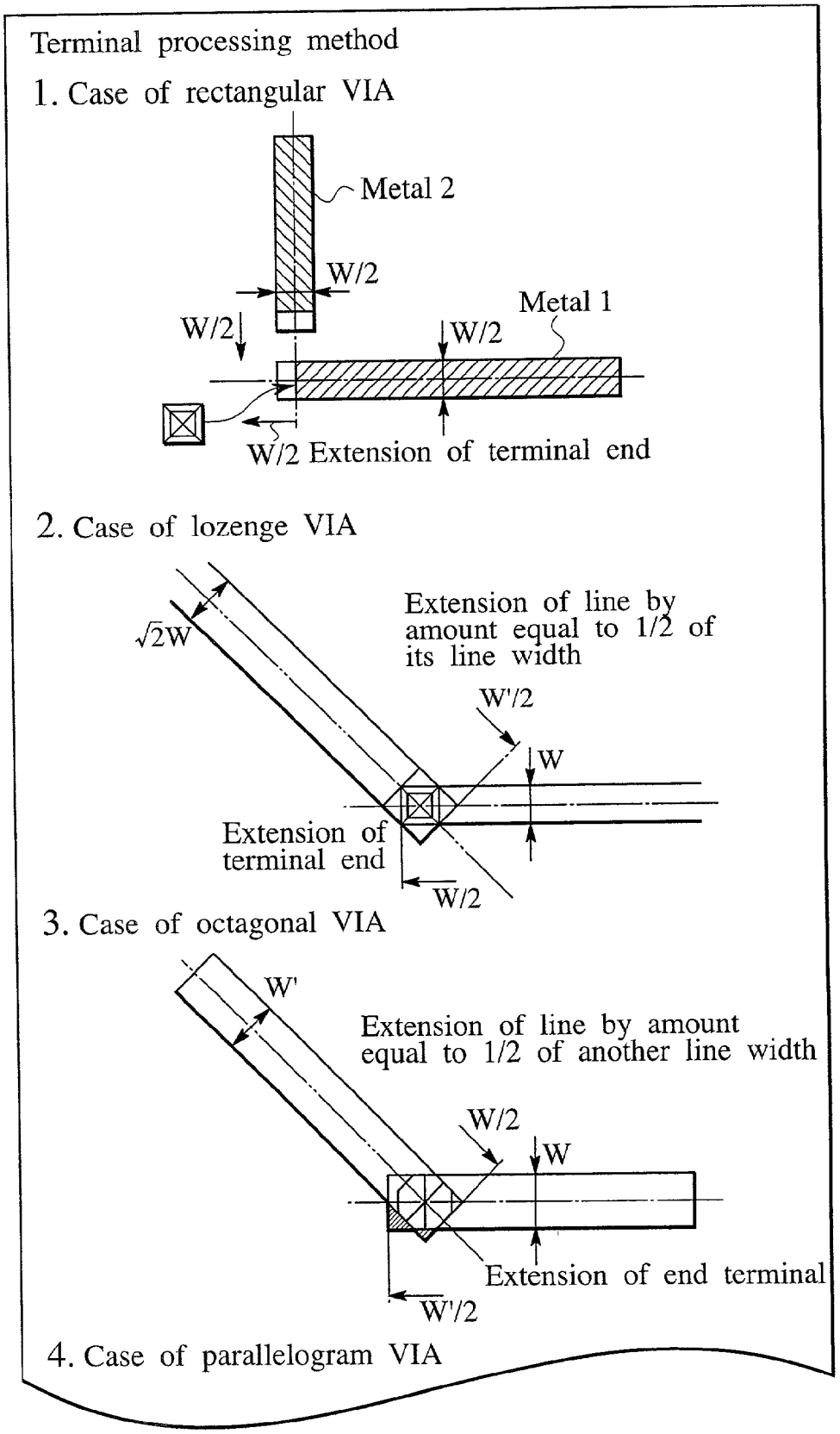
Terminal processing method
1. Case of rectangular VIA
Metal 2
W/2
W/2
W/2
Metal 1
W/2 Extension of terminal end
2. Case of lozenge VIA
√2W
Extension of line by amount equal to 1/2 of its line width
W'/2
W
Extension of terminal end
W/2
3. Case of octagonal VIA
W'
Extension of line by amount equal to 1/2 of another line width
W/2
W
Extension of end terminal
W'/2
4. Case of parallelogram VIA

FIG.10

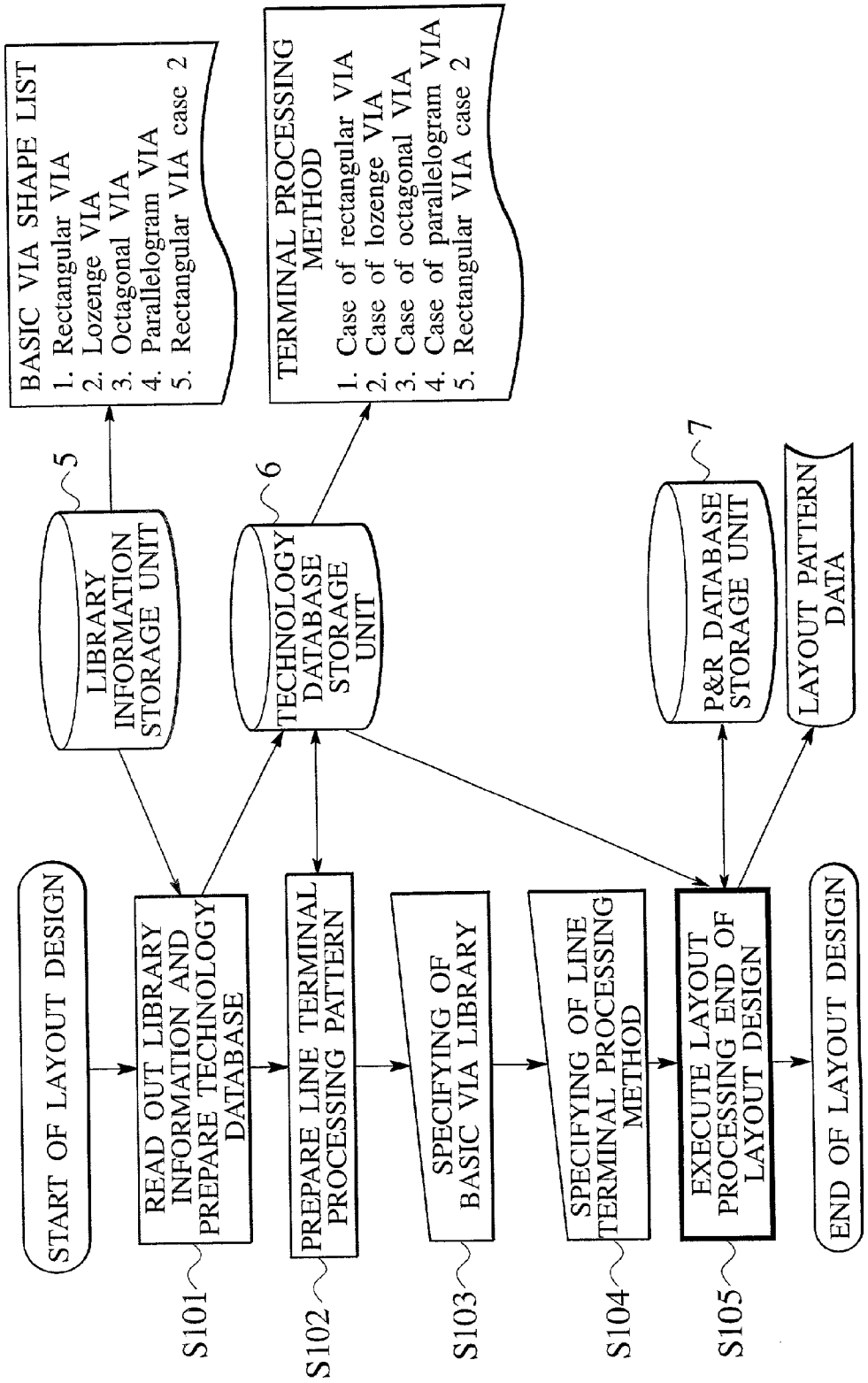
START OF LAYOUT DESIGN
READ OUT LIBRARY INFORMATION AND PREPARE TECHNOLOGY DATABASE
S101
PREPARE LINE TERMINAL PROCESSING PATTERN
S102
SPECIFYING OF BASIC VIA LIBRARY
S103
SPECIFYING OF LINE TERMINAL PROCESSING METHOD
S104
EXECUTE LAYOUT PROCESSING END OF LAYOUT DESIGN
S105
END OF LAYOUT DESIGN
LIBRARY INFORMATION STORAGE UNIT
5
BASIC VIA SHAPE LIST
1. Rectangular VIA
2. Lozenge VIA
3. Octagonal VIA
4. Parallelogram VIA
5. Rectangular VIA case 2
TECHNOLOGY DATABASE STORAGE UNIT
6
TERMINAL PROCESSING METHOD
1. Case of rectangular VIA
2. Case of lozenge VIA
3. Case of octagonal VIA
4. Case of parallelogram VIA
5. Rectangular VIA case 2
P&R DATABASE STORAGE UNIT
7
LAYOUT PATTERN DATA

FIG.11

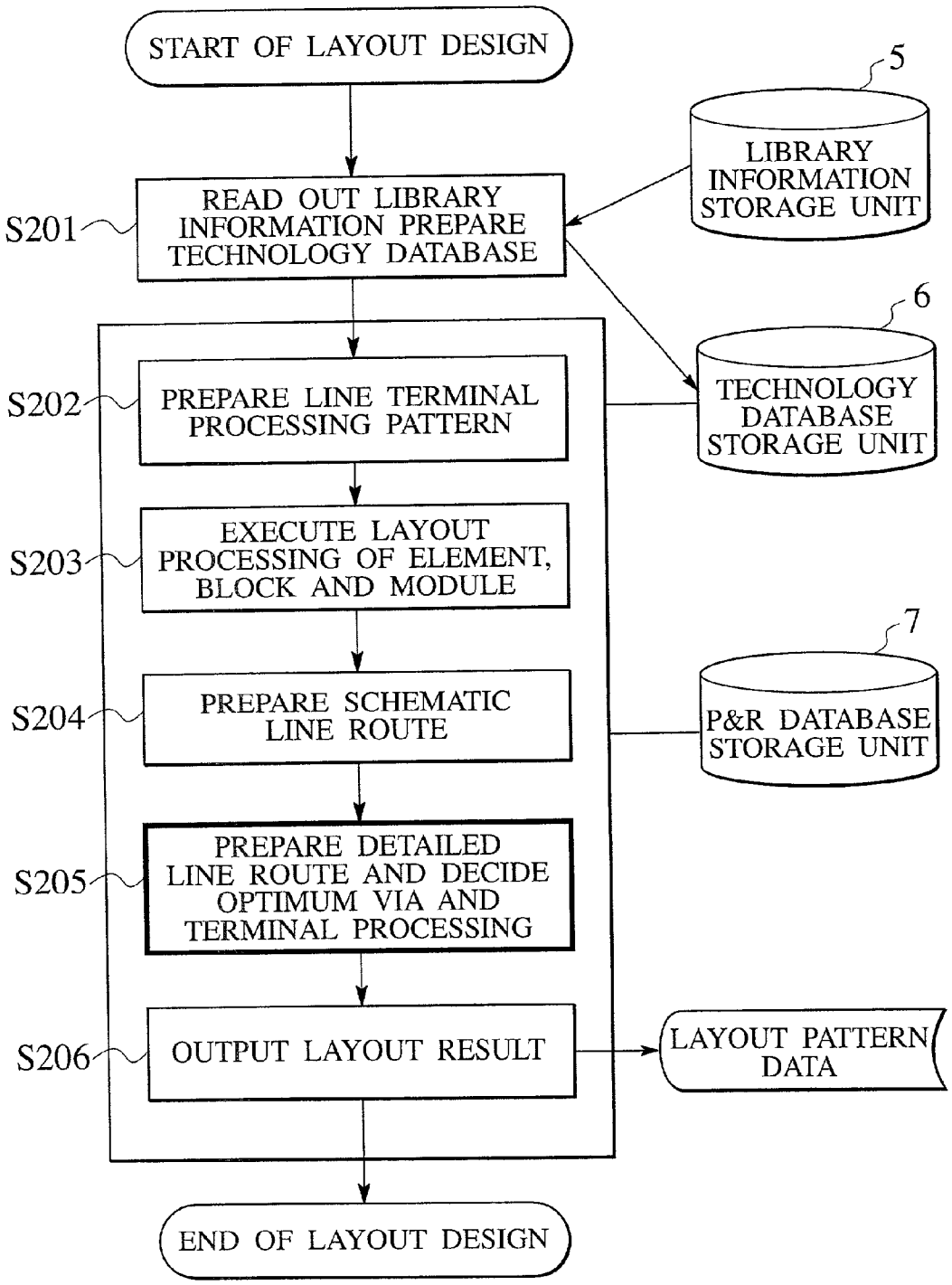
START OF LAYOUT DESIGN
5
LIBRARY INFORMATION STORAGE UNIT
S201
READ OUT LIBRARY INFORMATION PREPARE TECHNOLOGY DATABASE
6
TECHNOLOGY DATABASE STORAGE UNIT
S202
PREPARE LINE TERMINAL PROCESSING PATTERN
S203
EXECUTE LAYOUT PROCESSING OF ELEMENT, BLOCK AND MODULE
7
P&R DATABASE STORAGE UNIT
S204
PREPARE SCHEMATIC LINE ROUTE
S205
PREPARE DETAILED LINE ROUTE AND DECIDE OPTIMUM VIA AND TERMINAL PROCESSING
S206
OUTPUT LAYOUT RESULT
LAYOUT PATTERN DATA
END OF LAYOUT DESIGN

FIG.12

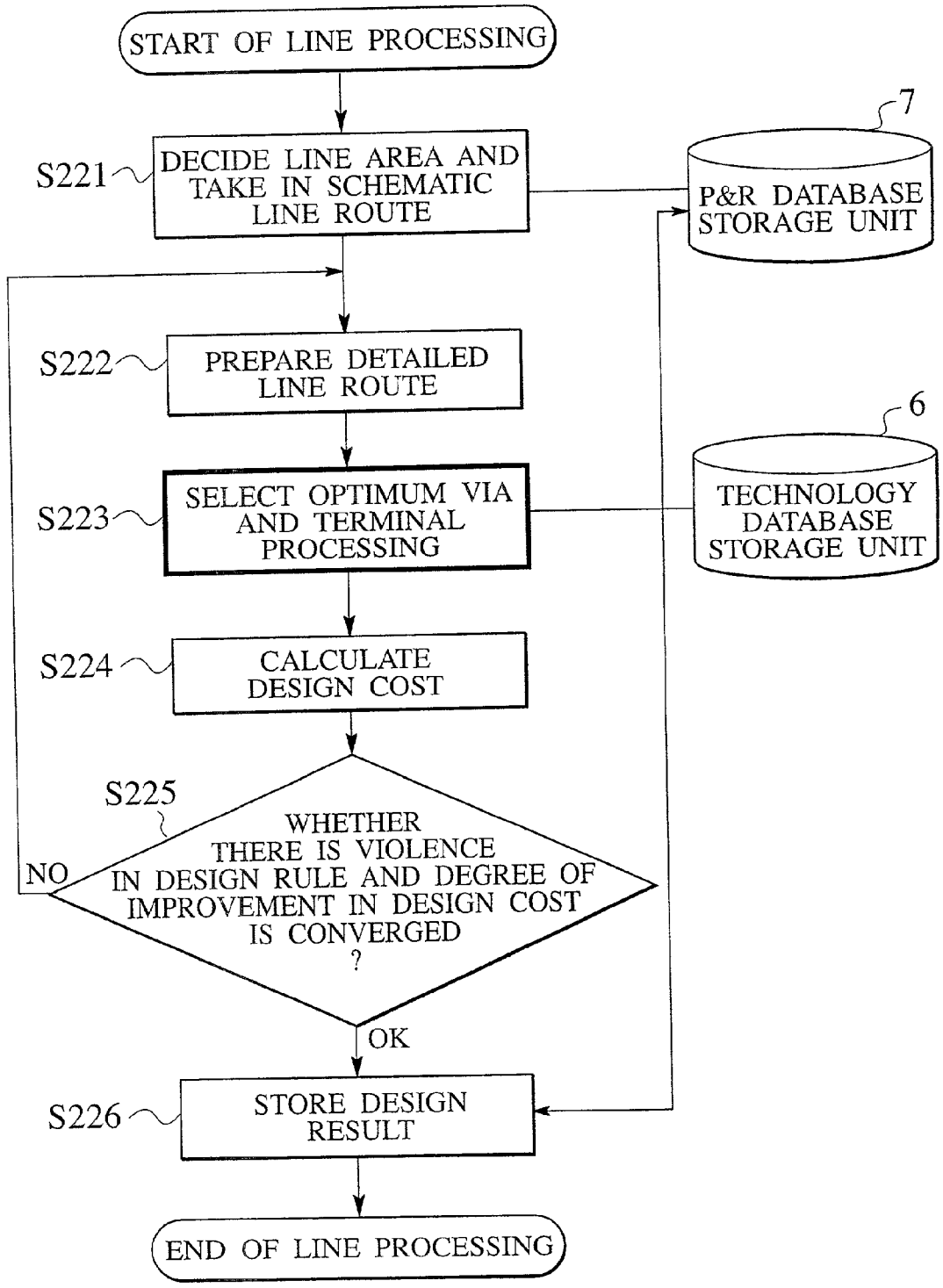
START OF LINE PROCESSING
S221
DECIDE LINE AREA AND TAKE IN SCHEMATIC LINE ROUTE
7
P&R DATABASE STORAGE UNIT
S222
PREPARE DETAILED LINE ROUTE
6
S223
SELECT OPTIMUM VIA AND TERMINAL PROCESSING
TECHNOLOGY DATABASE STORAGE UNIT
S224
CALCULATE DESIGN COST
S225
WHETHER THERE IS VIOLENCE IN DESIGN RULE AND DEGREE OF IMPROVEMENT IN DESIGN COST IS CONVERGED ?
NO
OK
S226
STORE DESIGN RESULT
END OF LINE PROCESSING

FIG.13

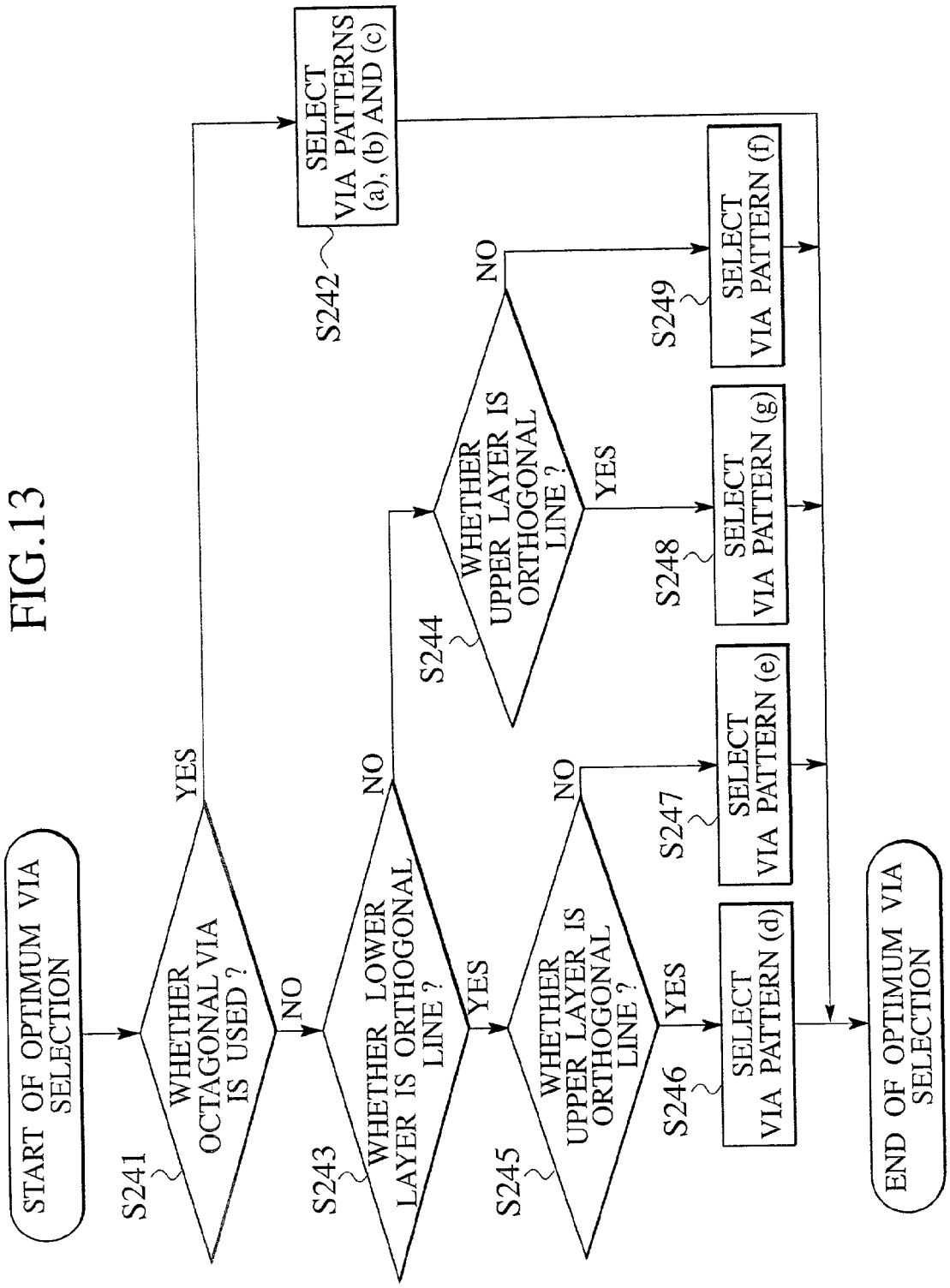
START OF OPTIMUM VIA SELECTION
S241
WHETHER OCTAGONAL VIA IS USED ?
YES
NO
S242
SELECT VIA PATTERNS (a), (b) AND (c)
S243
WHETHER LOWER LAYER IS ORTHOGONAL LINE ?
NO
YES
S244
WHETHER UPPER LAYER IS ORTHOGONAL LINE ?
NO
YES
S245
WHETHER UPPER LAYER IS ORTHOGONAL LINE ?
NO
YES
S246
SELECT VIA PATTERN (d)
S247
SELECT VIA PATTERN (e)
S248
SELECT VIA PATTERN (g)
S249
SELECT VIA PATTERN (f)
END OF OPTIMUM VIA SELECTION

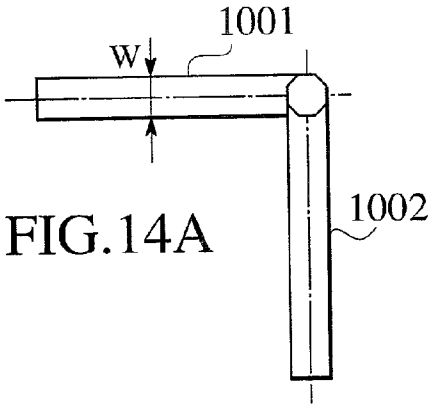

FIG.14A

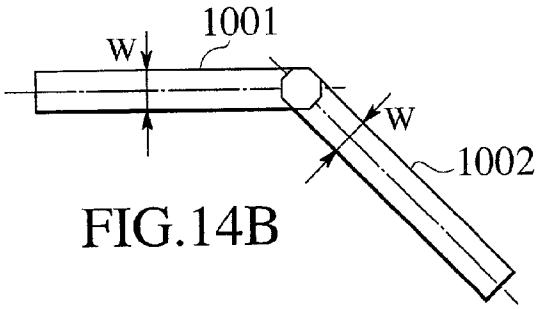

FIG.14B

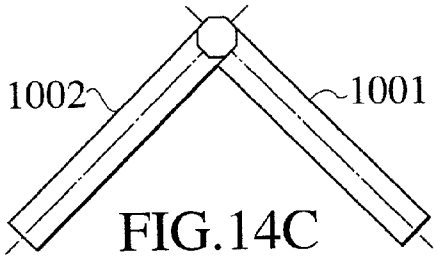

FIG.14C

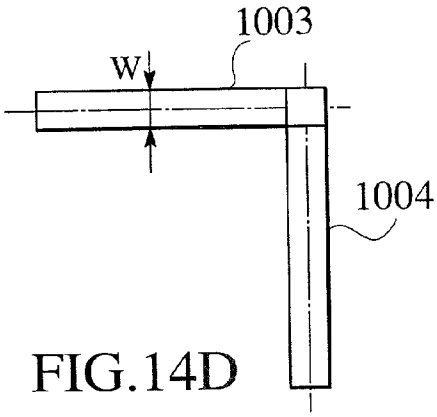

FIG.14D

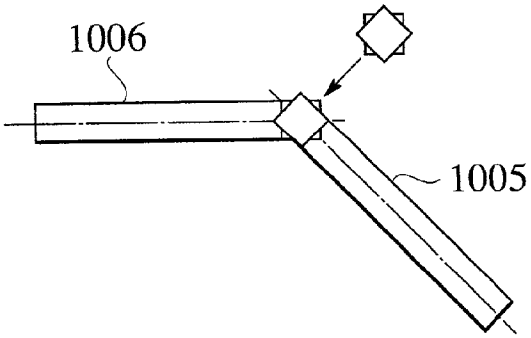

FIG.14E

FIG.14F

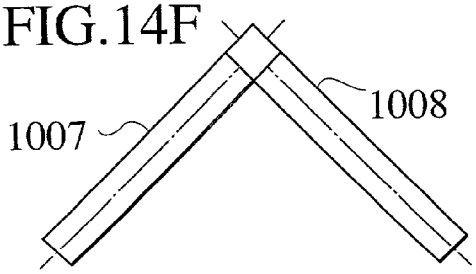

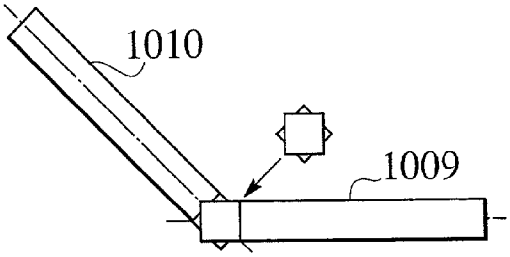

FIG.14G

FIG.15A

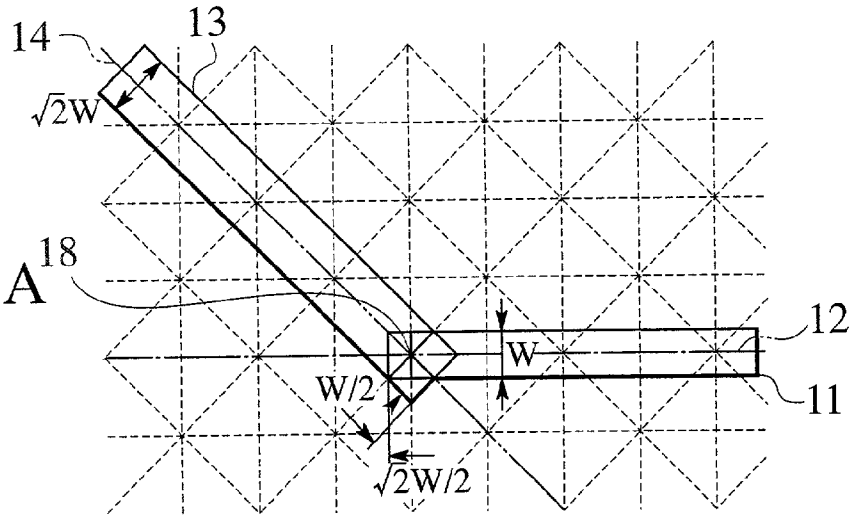

FIG.15B

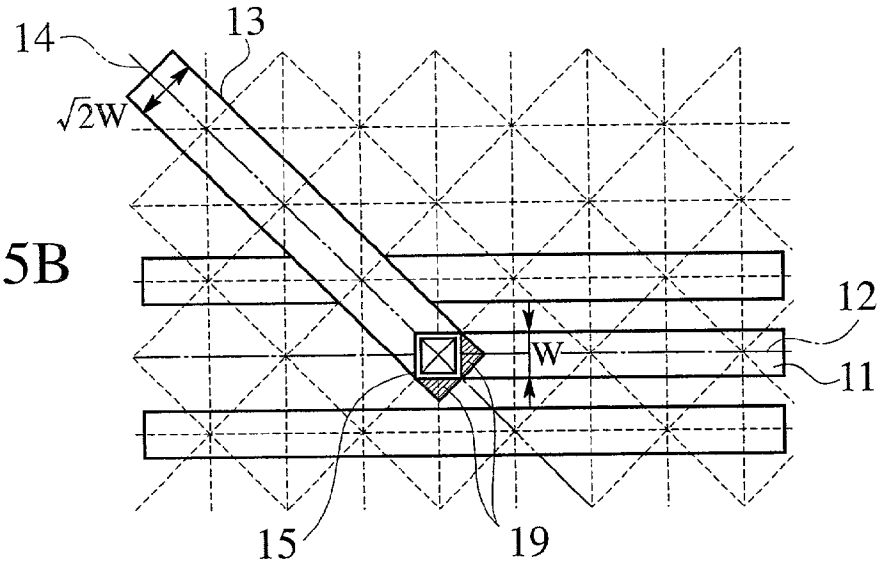

FIG.15C

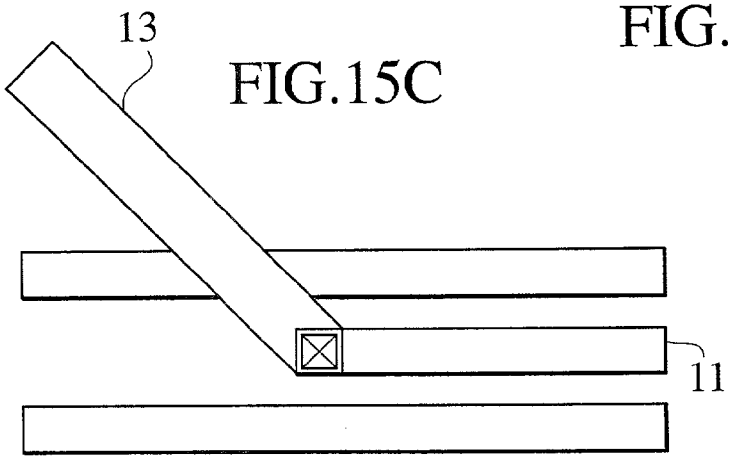

FIG.15D

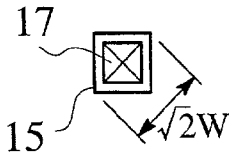

FIG.15E

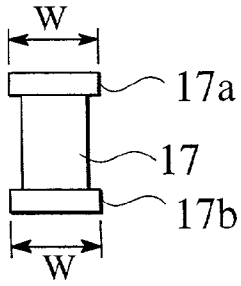

FIG.16A

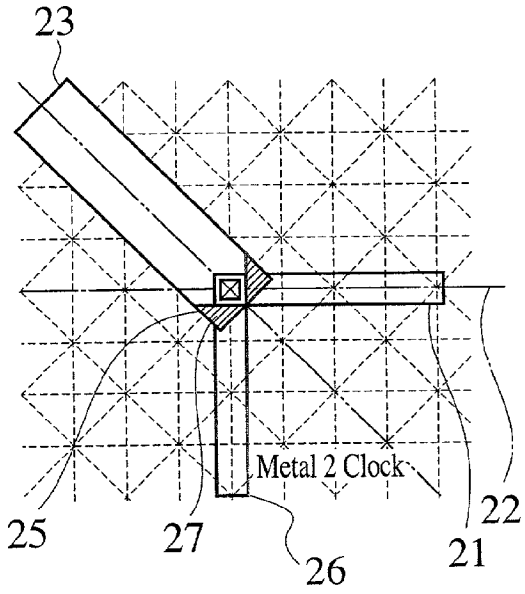

FIG.16B

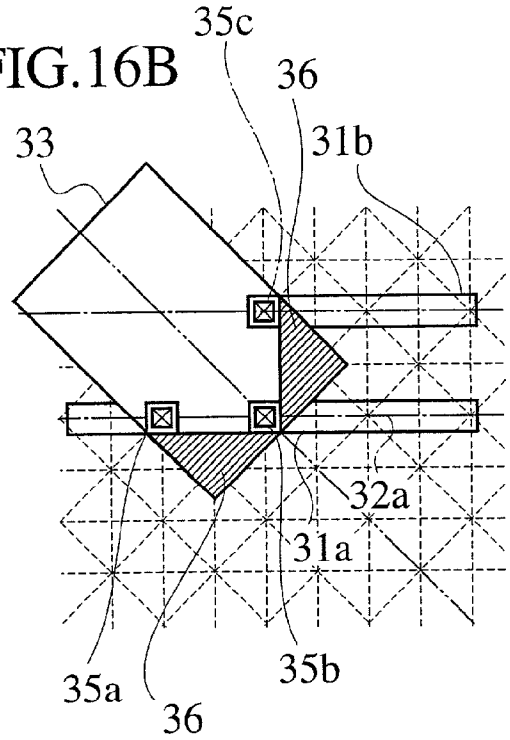

FIG.16C

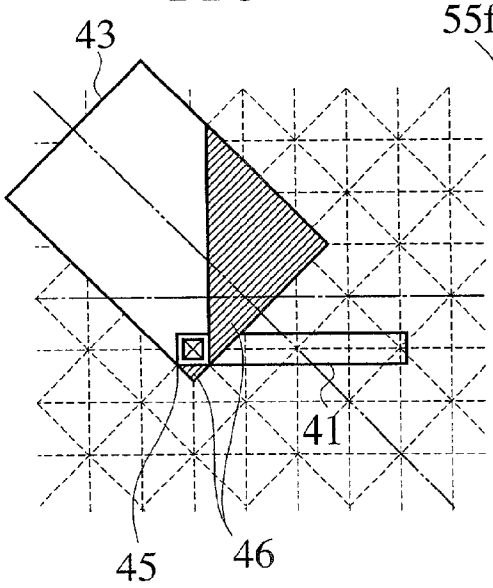

FIG.16D

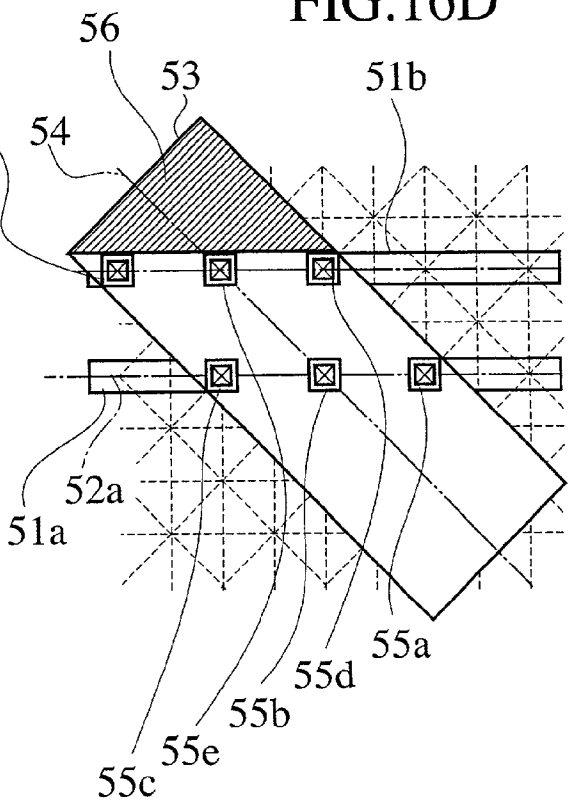

FIG.17A

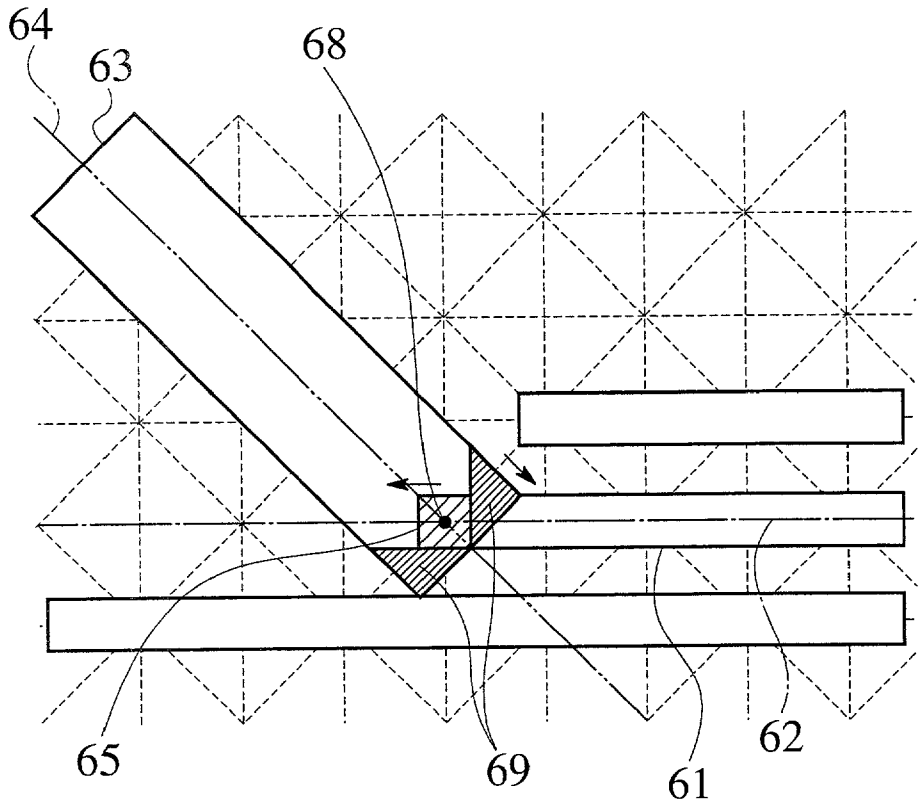

FIG.17B

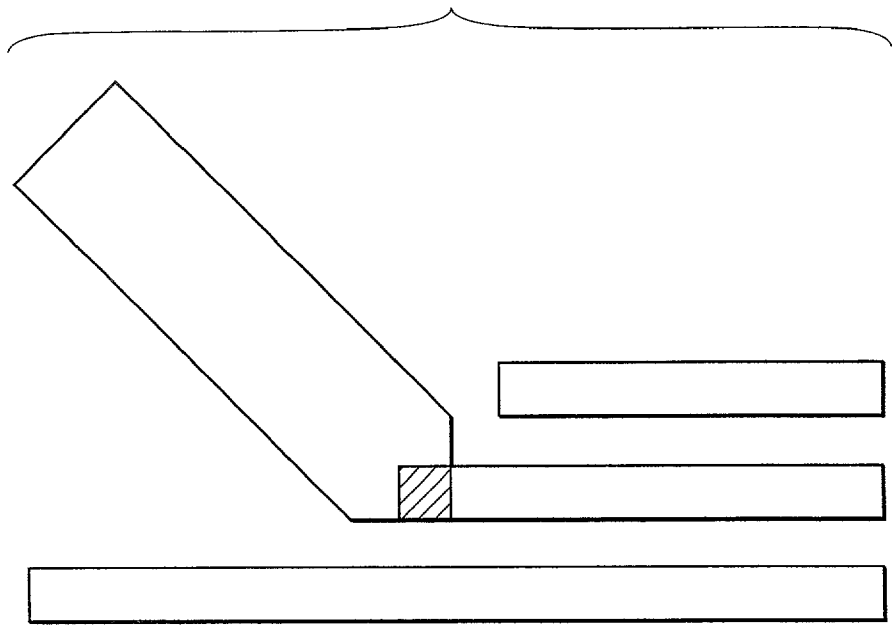

FIG.18A

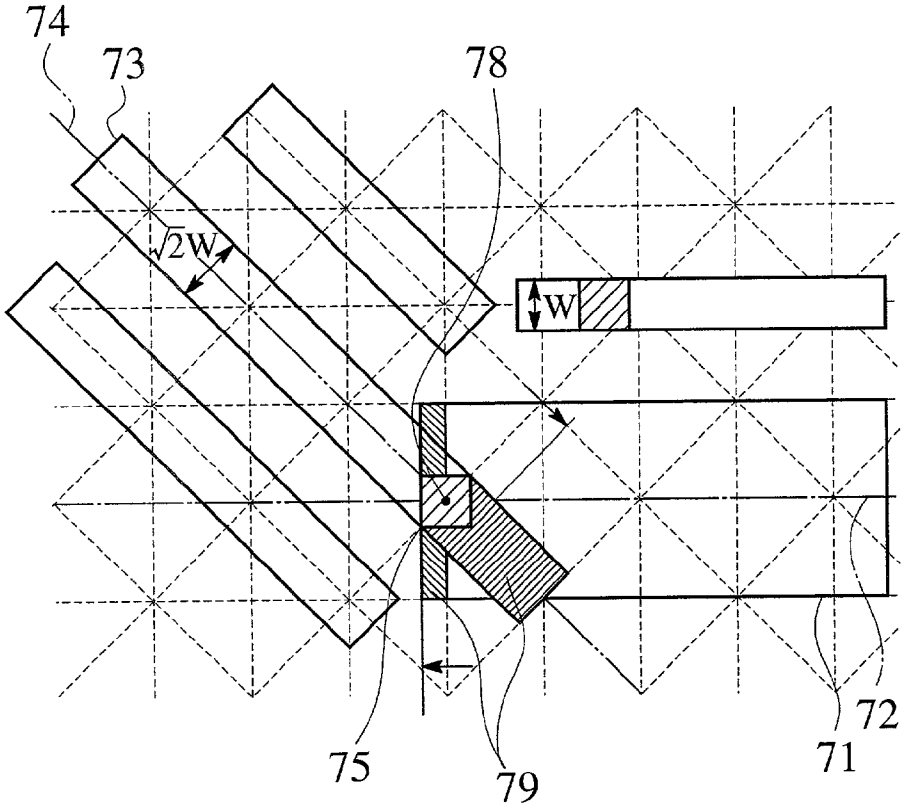

FIG.18B

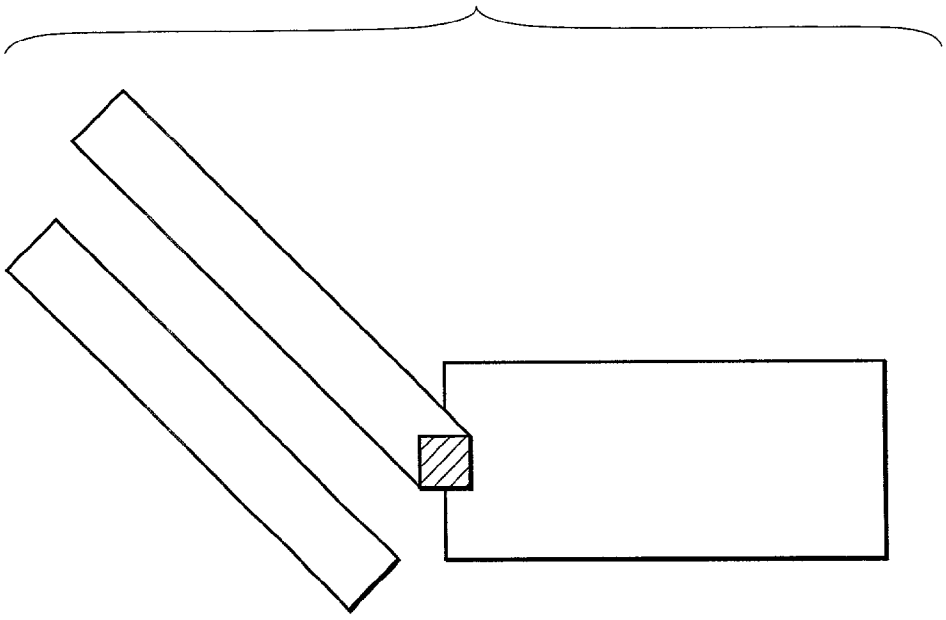

FIG.19A

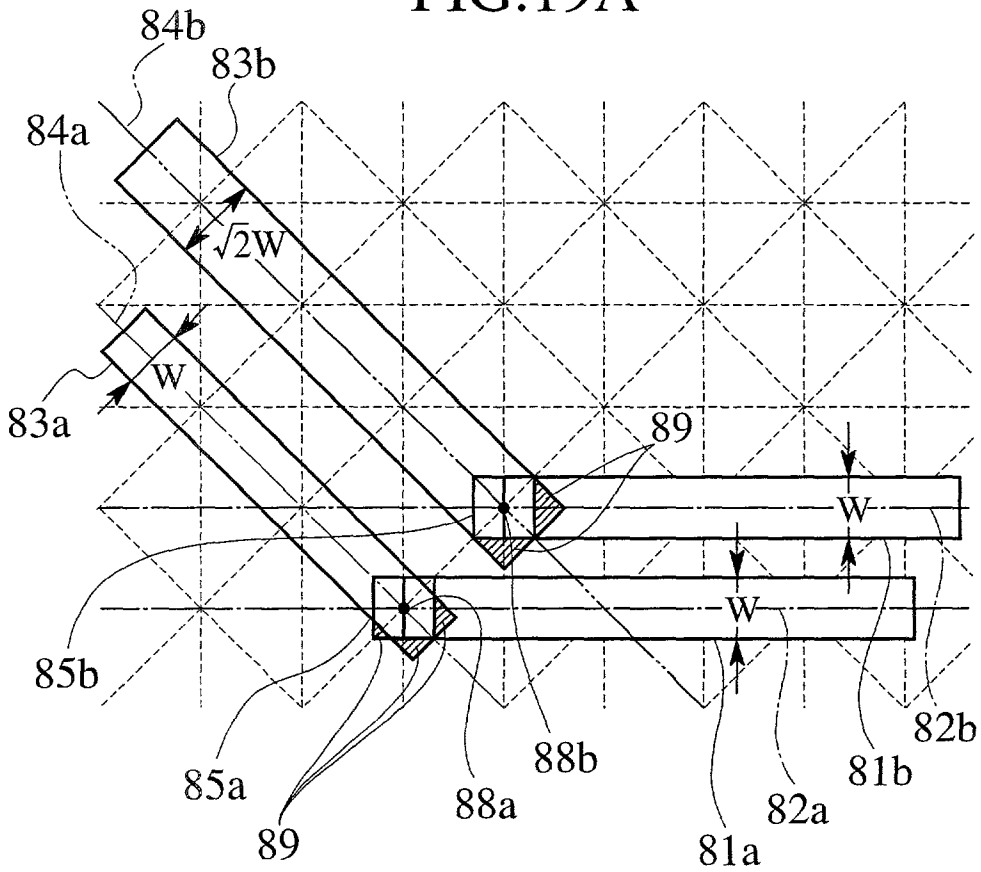

FIG.19B

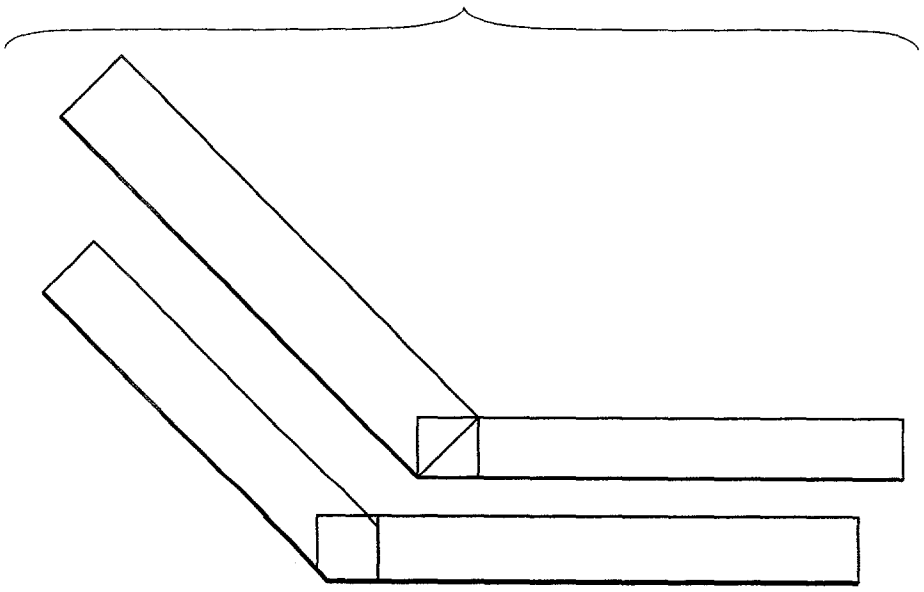

FIG.20A

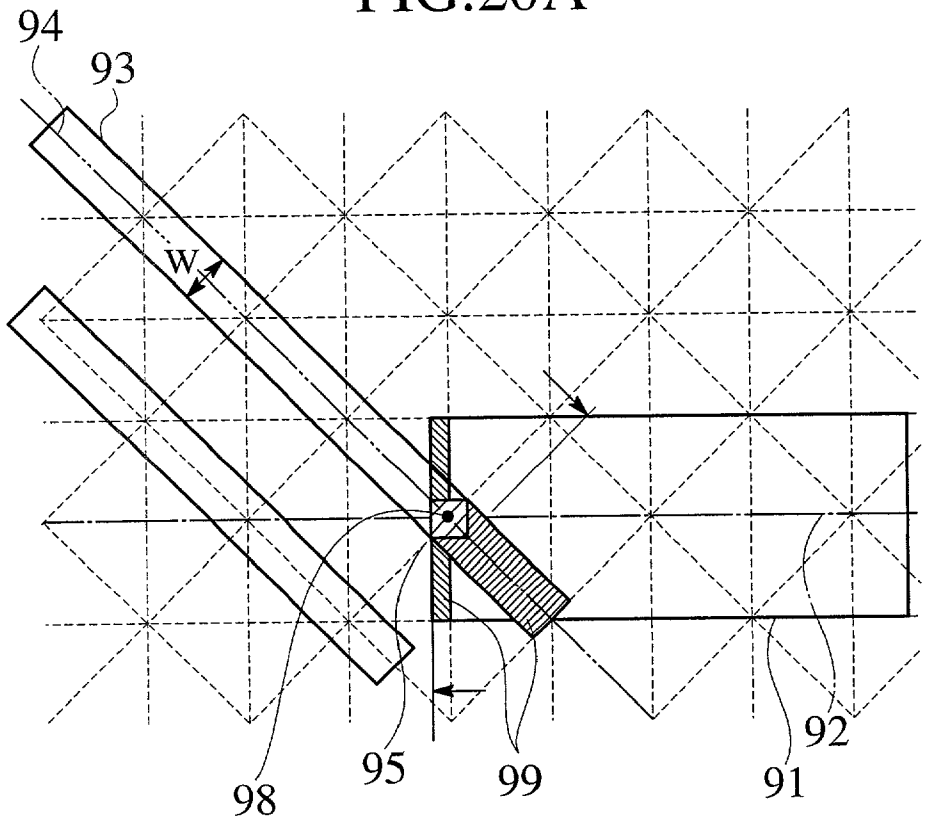

FIG.20B

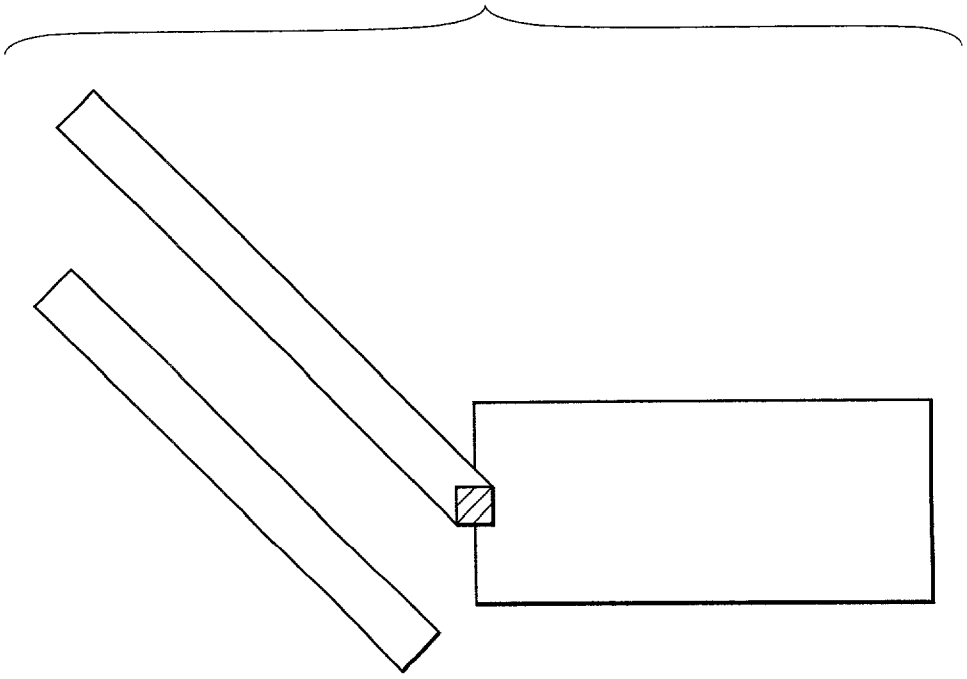

FIG.21A

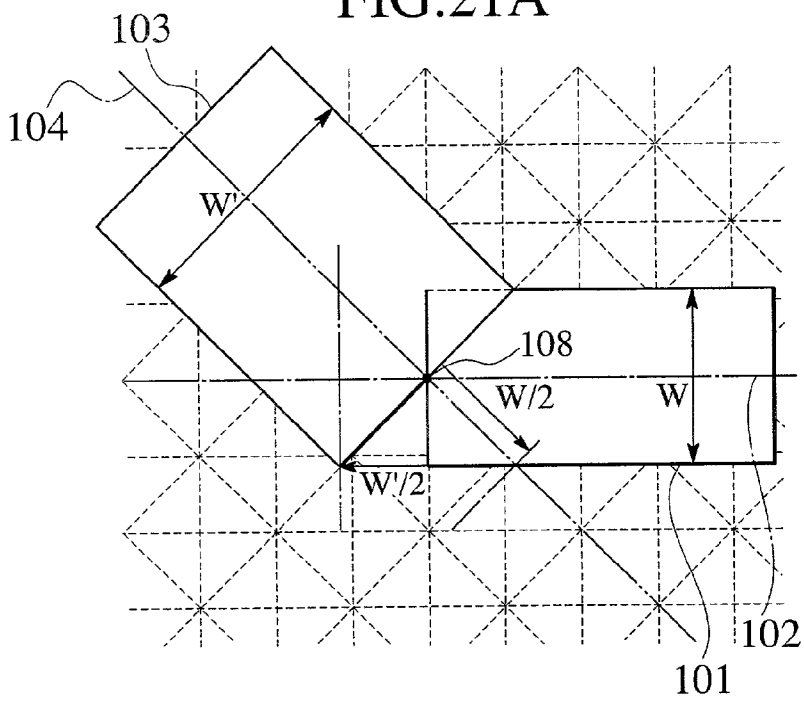

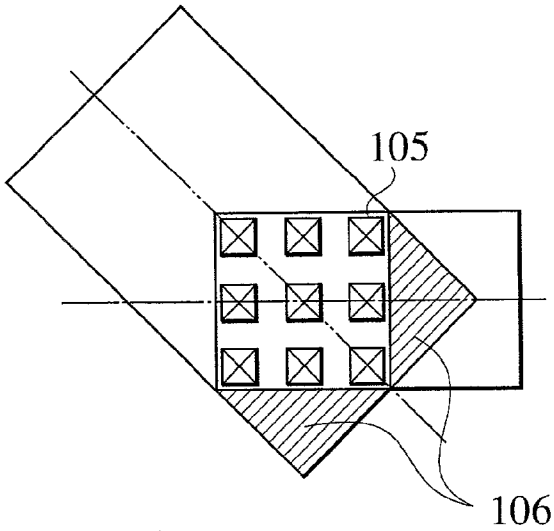

FIG.21B

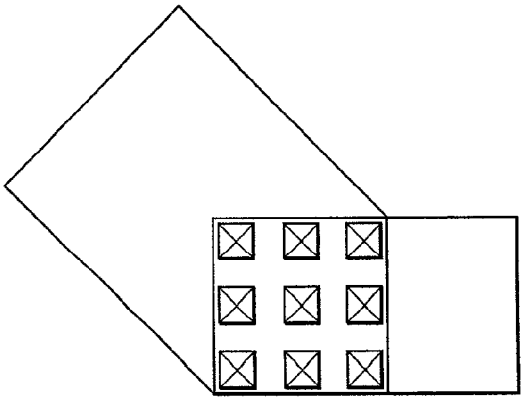

FIG.21C

FIG.22A

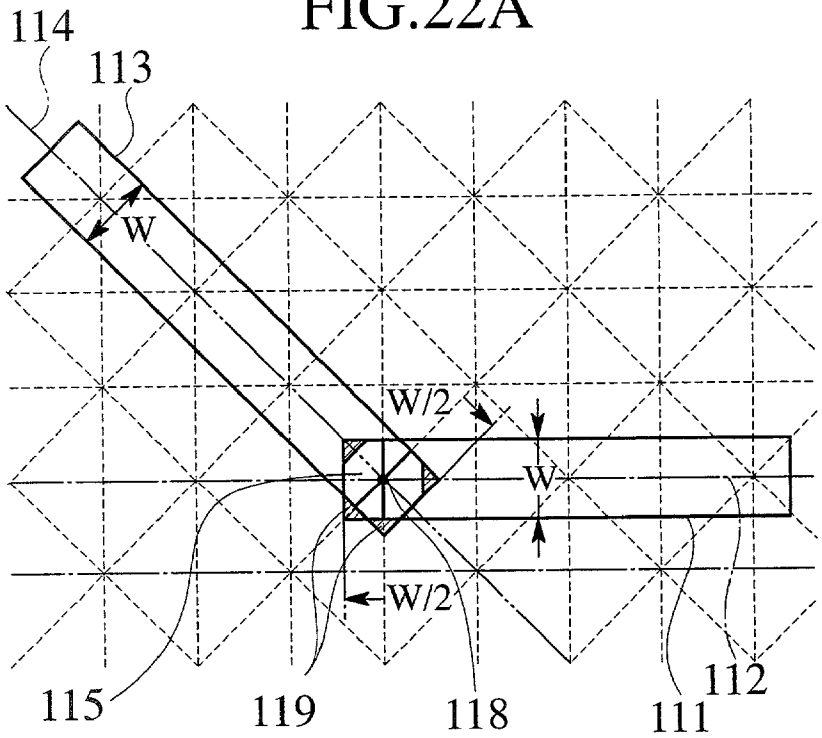

FIG.22B

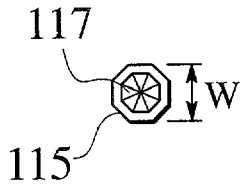

FIG.22C

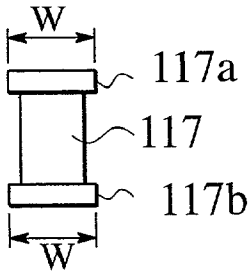

FIG.22D

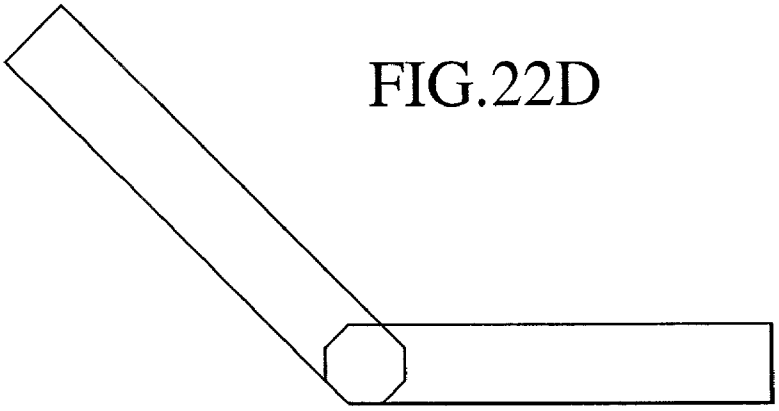

FIG.23A

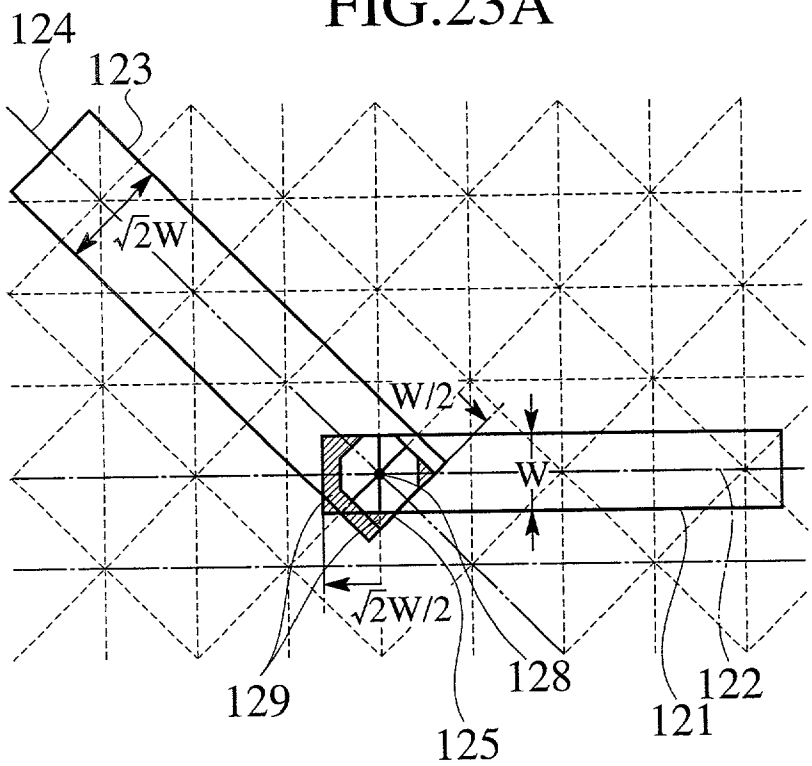

FIG.23B

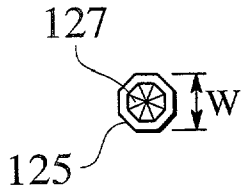

FIG.23C

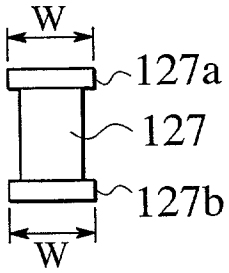

FIG.23D

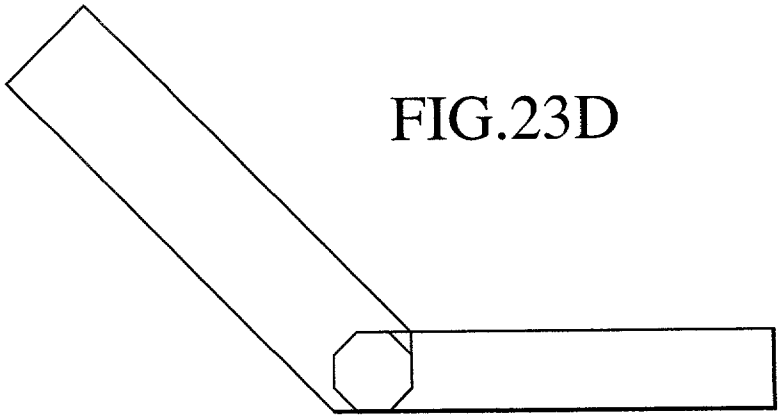

FIG.24A

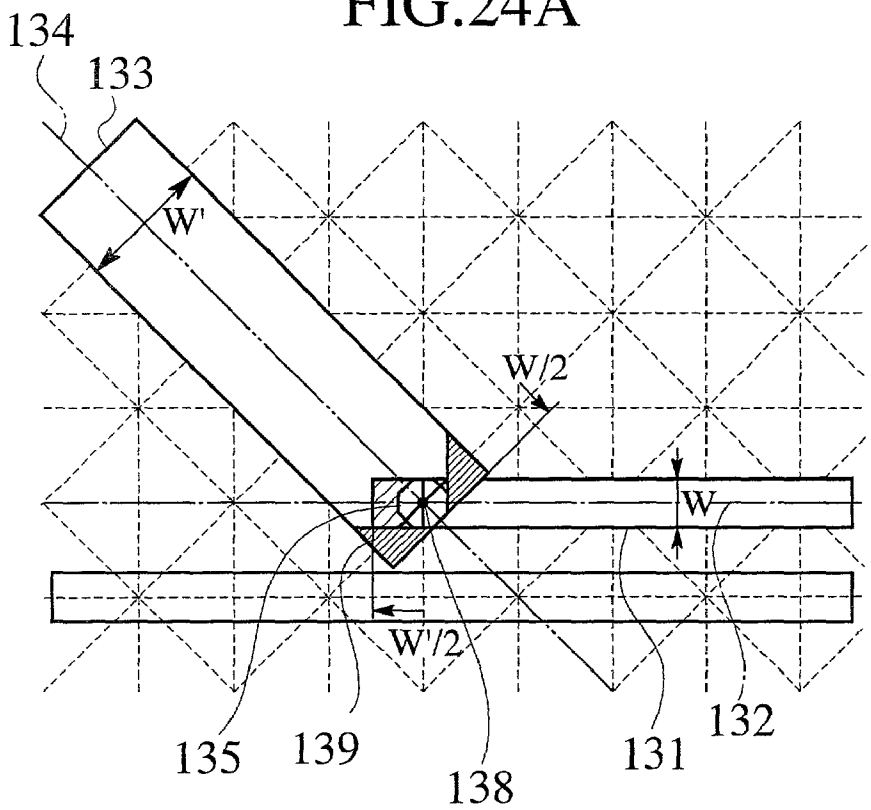

FIG.24B

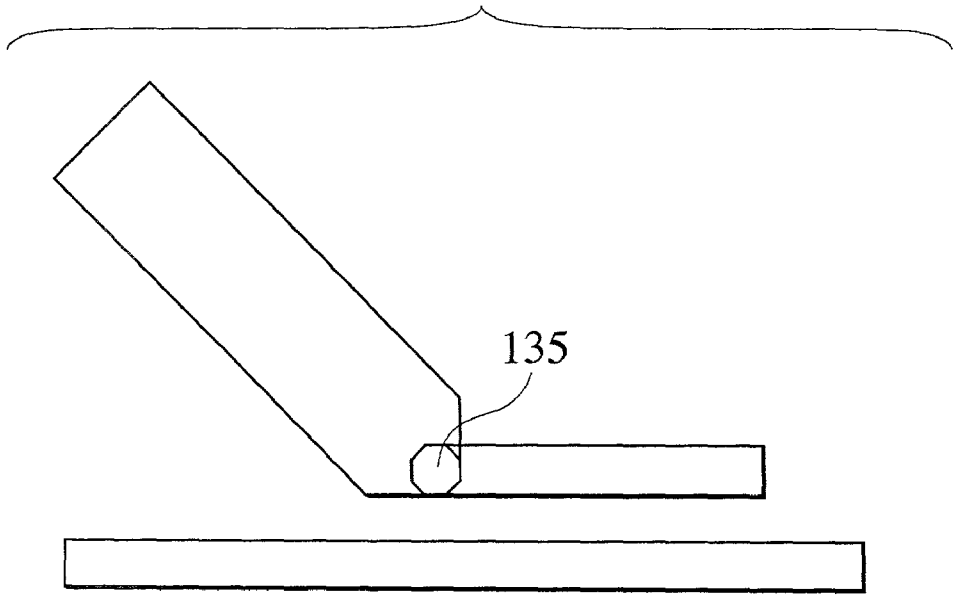

FIG.25A

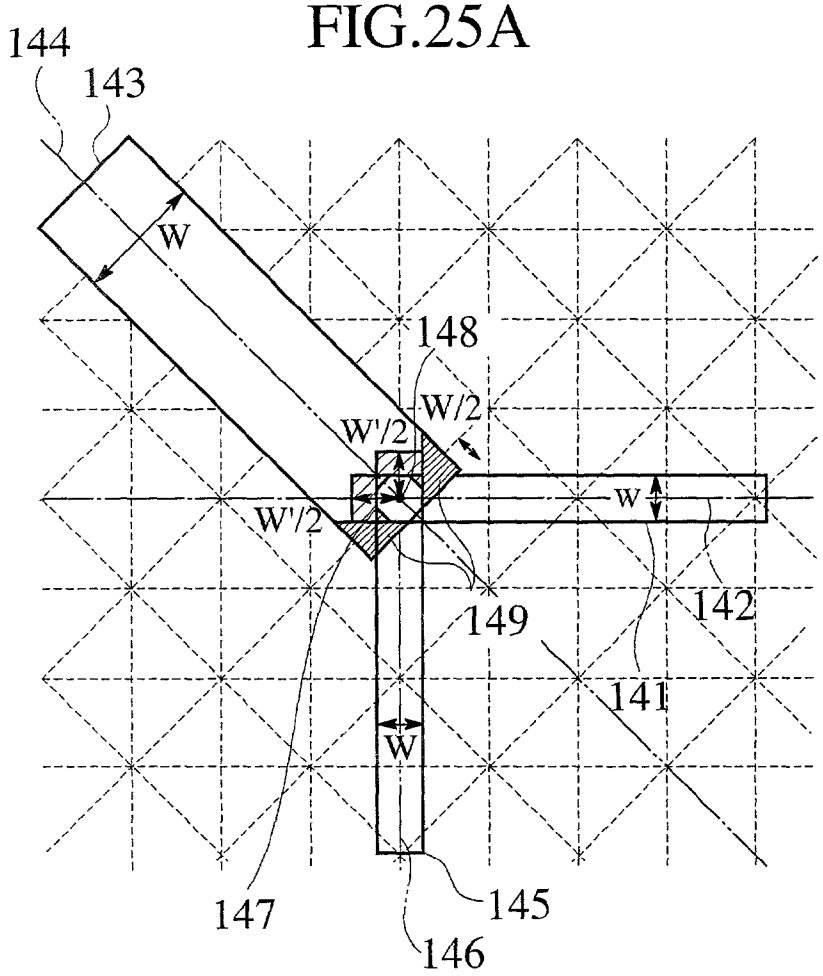

FIG.25B

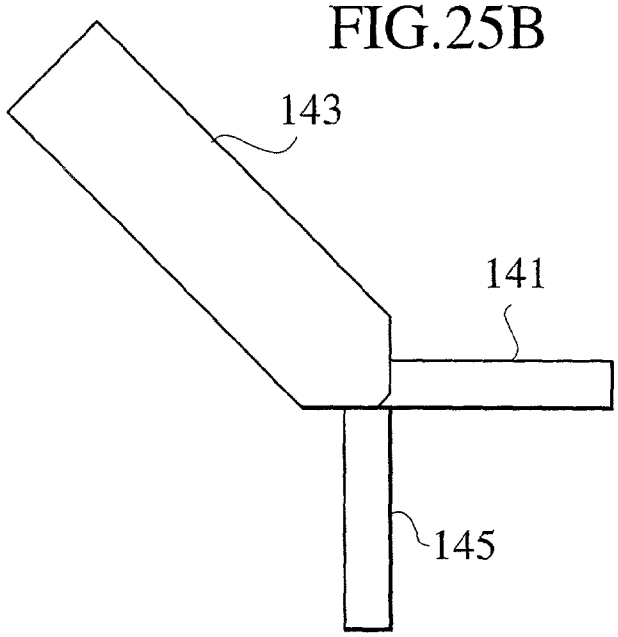

FIG.26A

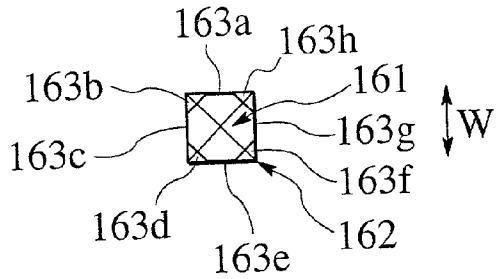

FIG.26B

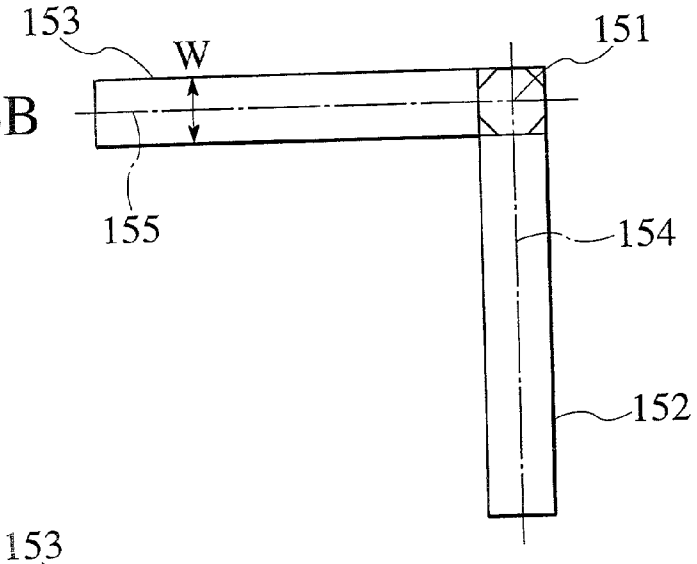

FIG.26C

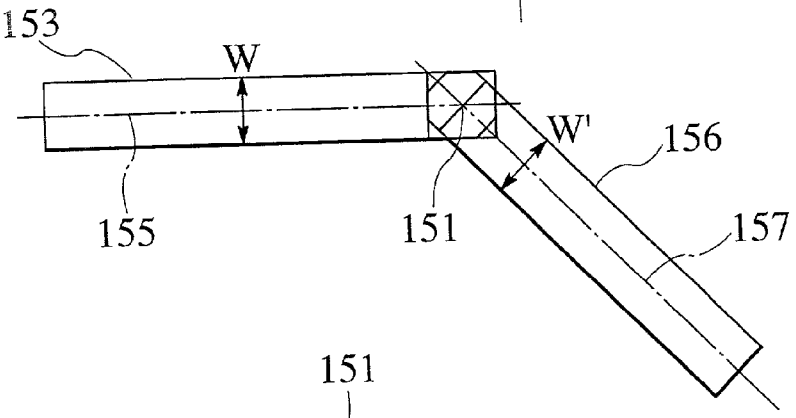

FIG.26D

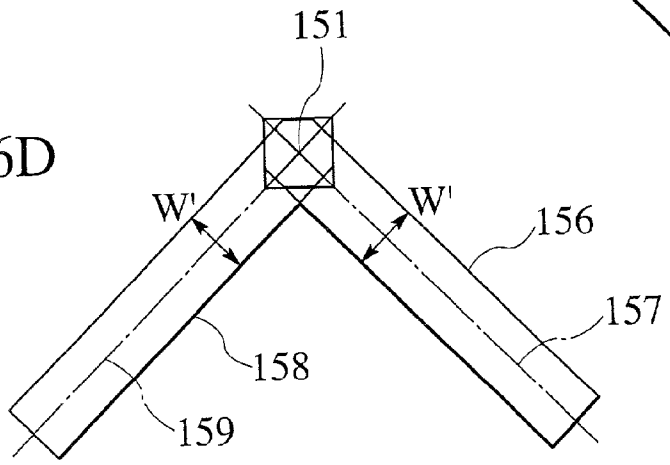

FIG.27

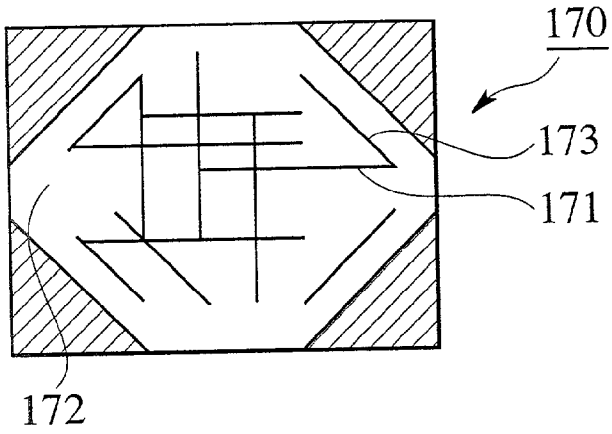

FIG.28A

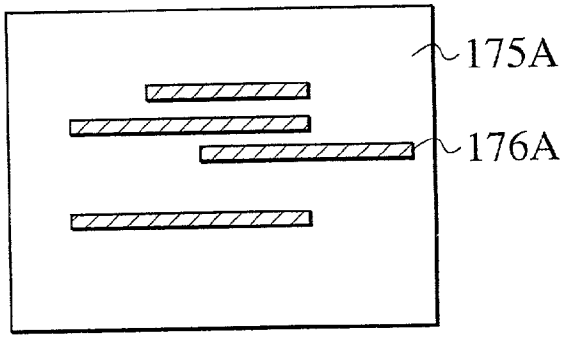

FIG.28B

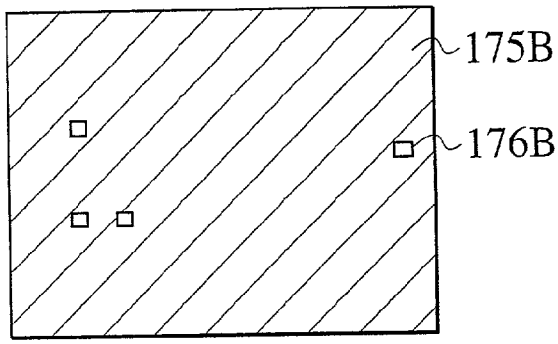

FIG.28C

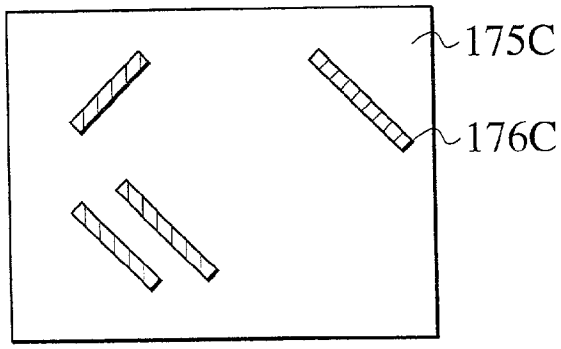

175

FIG.29

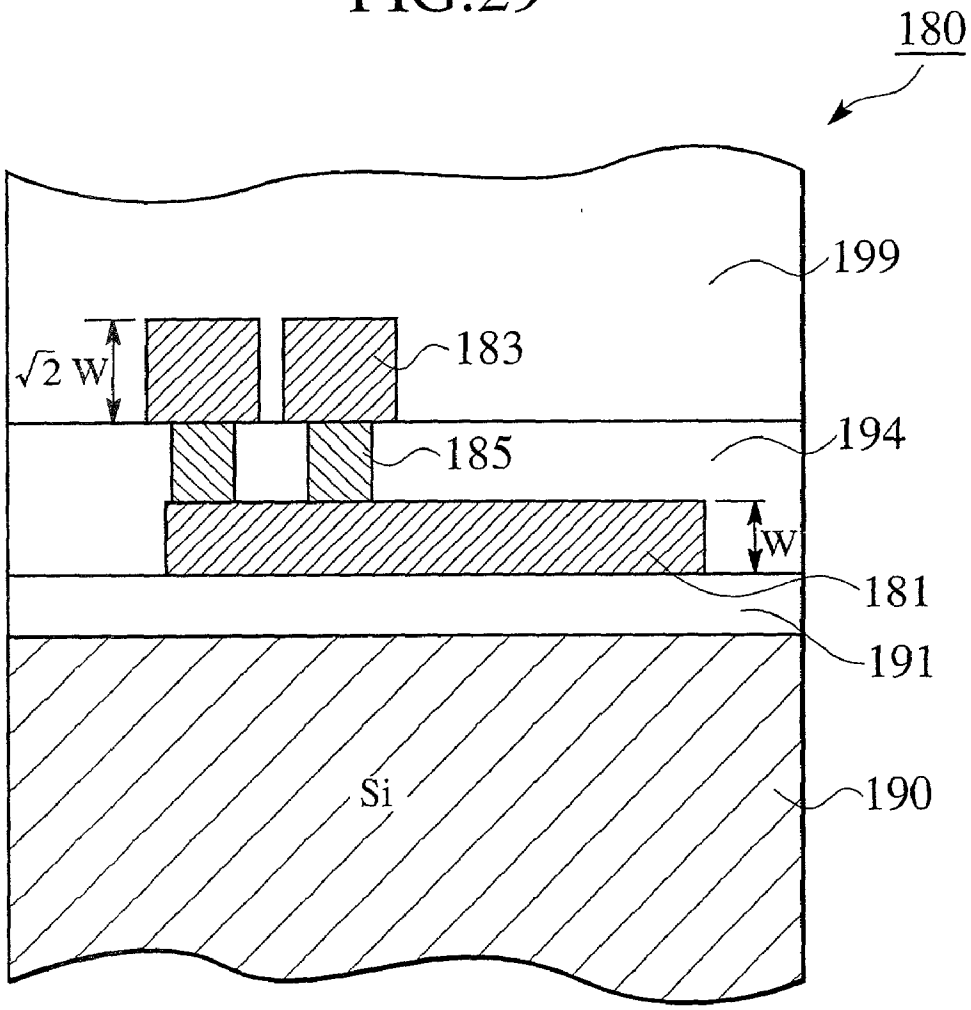

FIG.30A

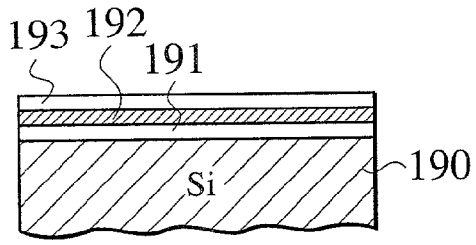

FIG.30B

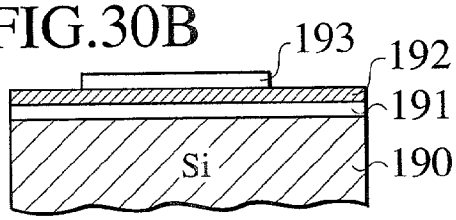

FIG.30C

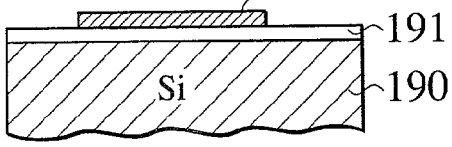

FIG.30D

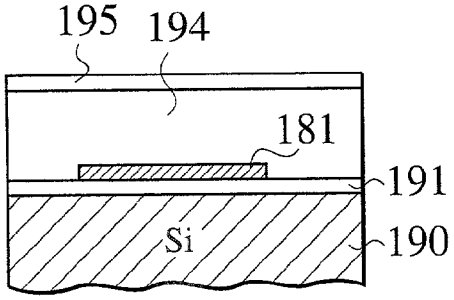

FIG.30E

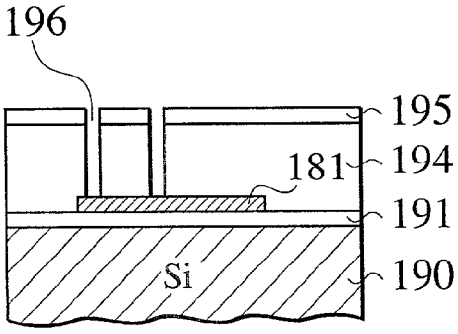

FIG.30F

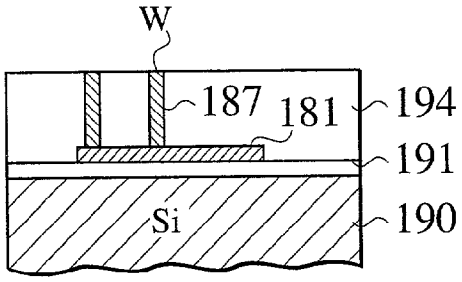

FIG.30G

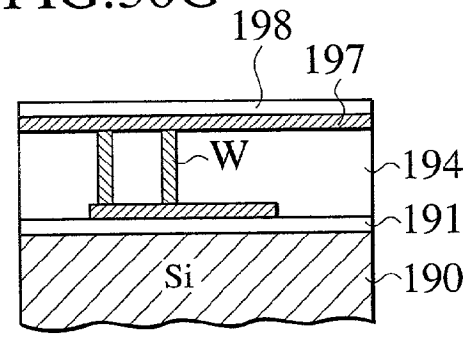

FIG.30H

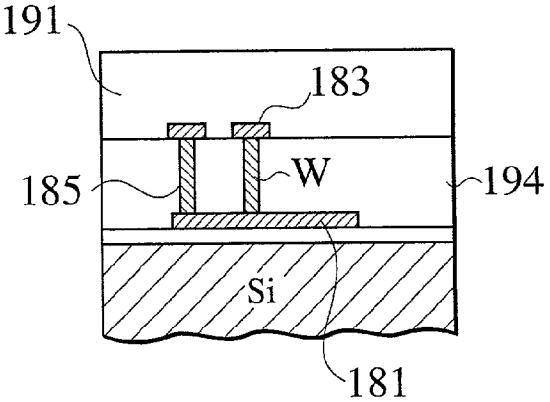

FIG.31

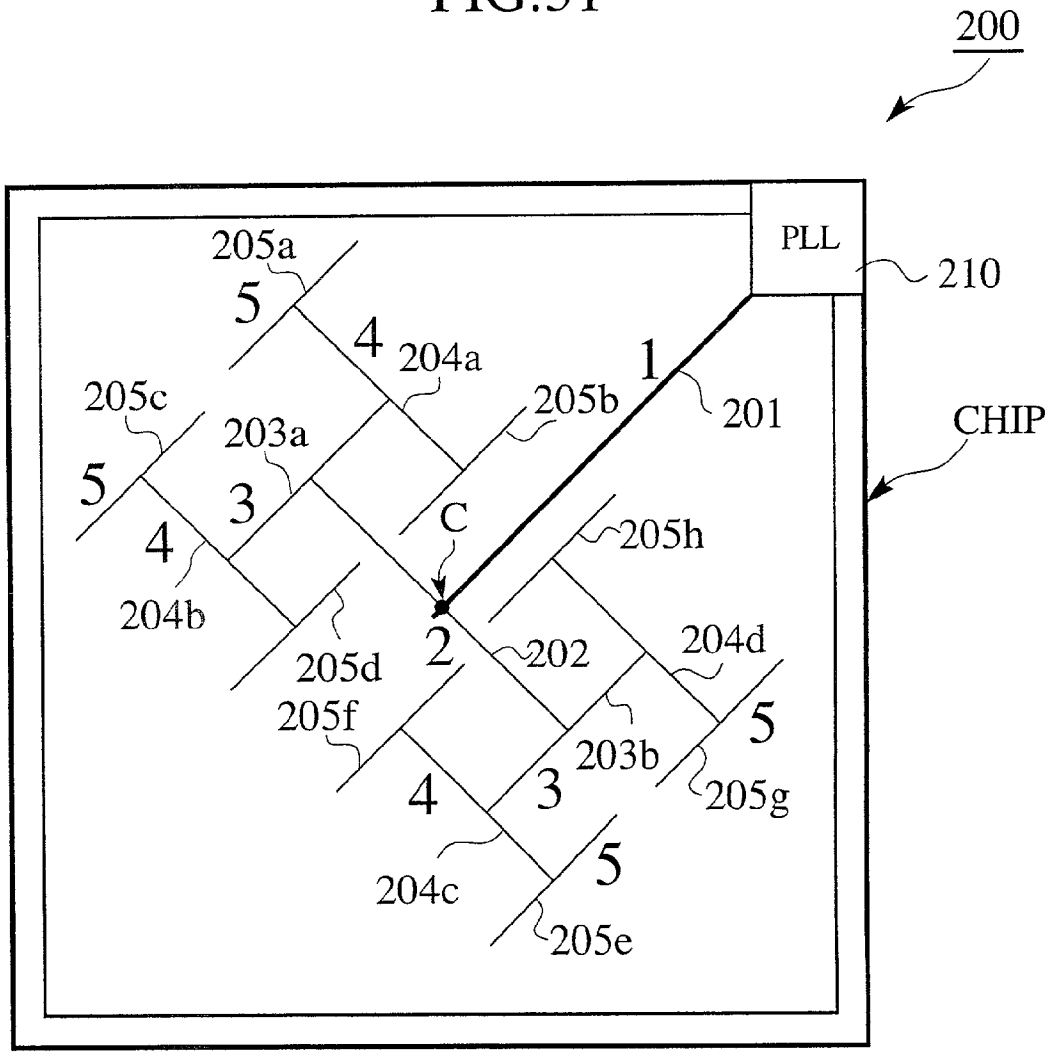
200
PLL
210
CHIP
205a
5
4
204a
1
201
205b
205c
203a
5
3
C
205h
4
204b
205d
2
202
204d
205f
5
203b
4
3
205g
204c
5
205e

FIG.32

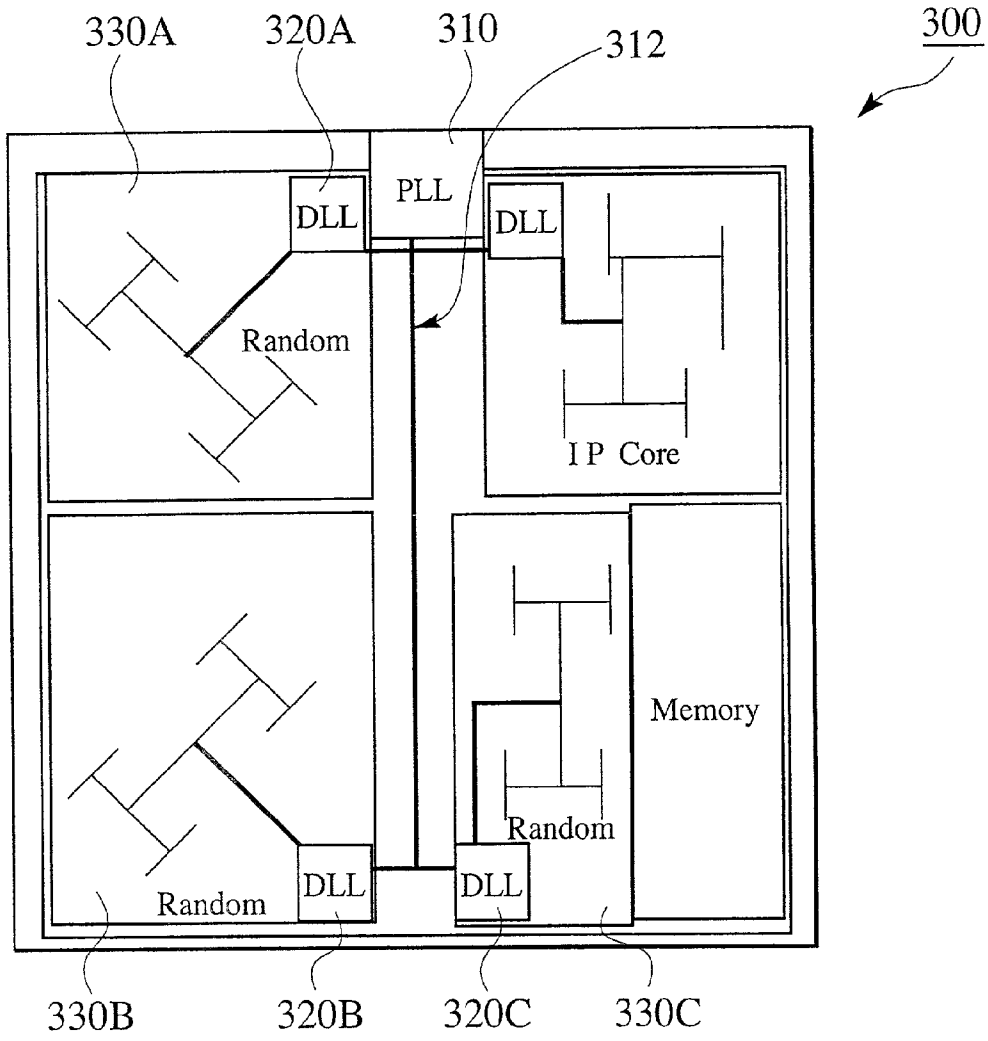
330A
320A
310
312
300
PLL
DLL
DLL
Random
I P Core
Memory
Random
Random
DLL
DLL
330B
320B
320C
330C

FIG.33

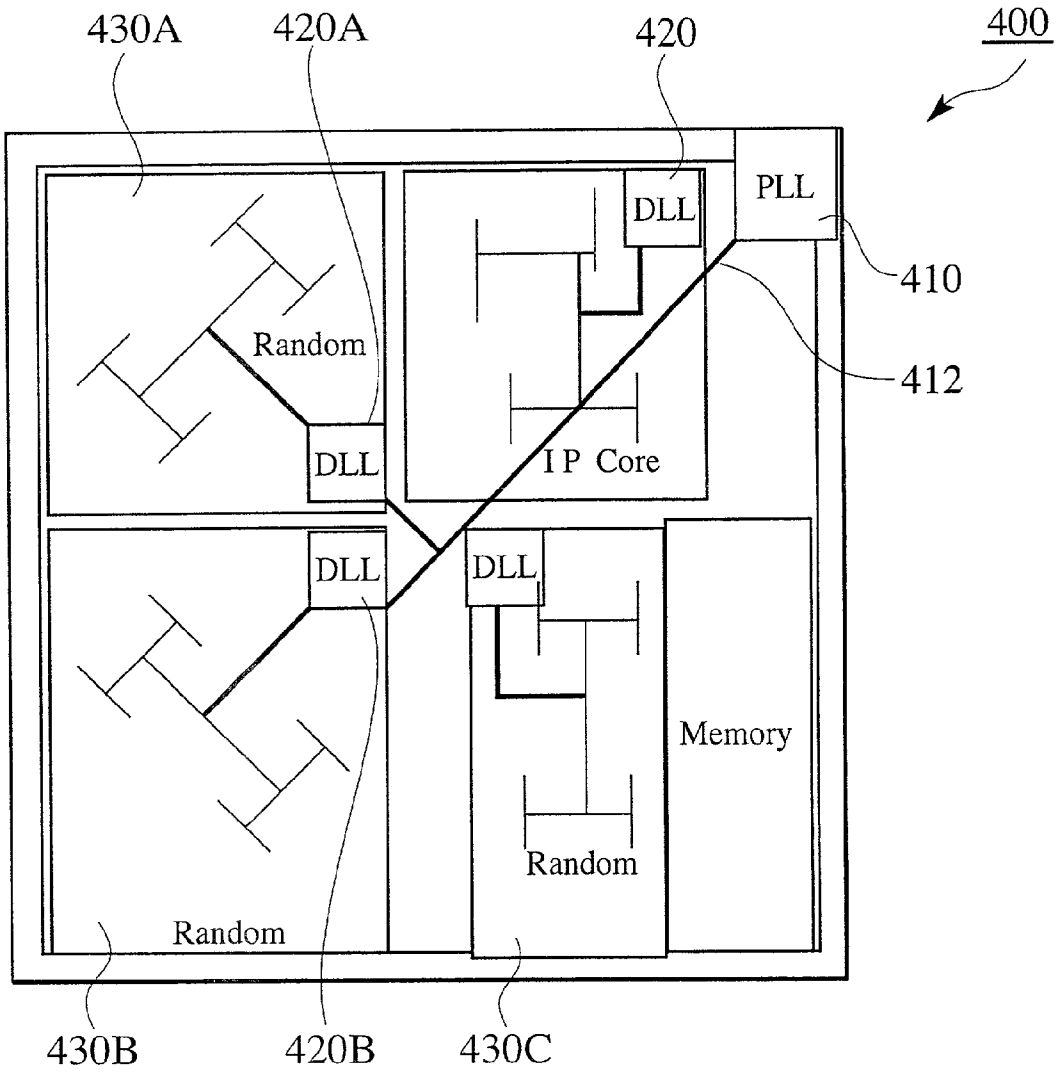
430A
420A
420
400
PLL
DLL
410
Random
412
DLL
I P Core
DLL
DLL
Memory
Random
Random
430B
420B
430C

FIG.34

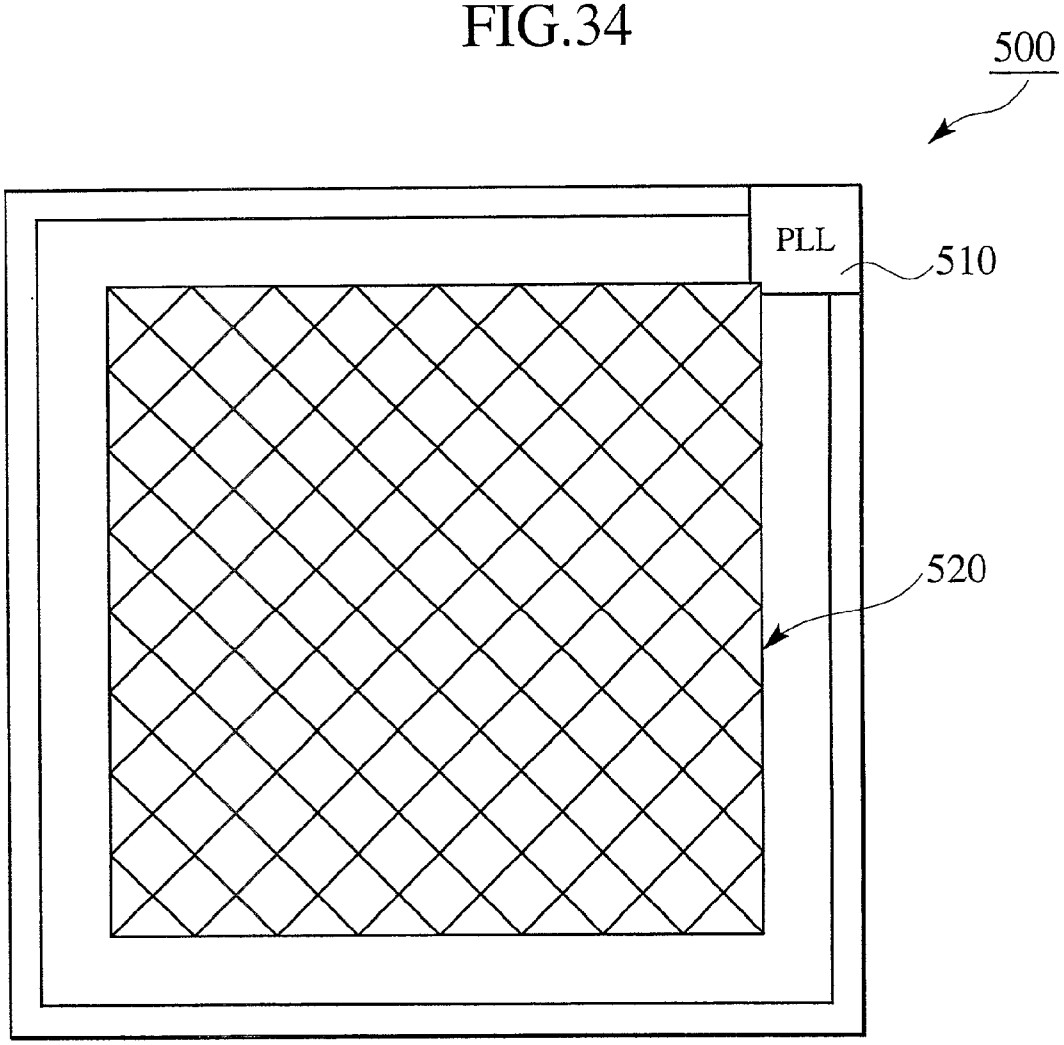

FIG.35

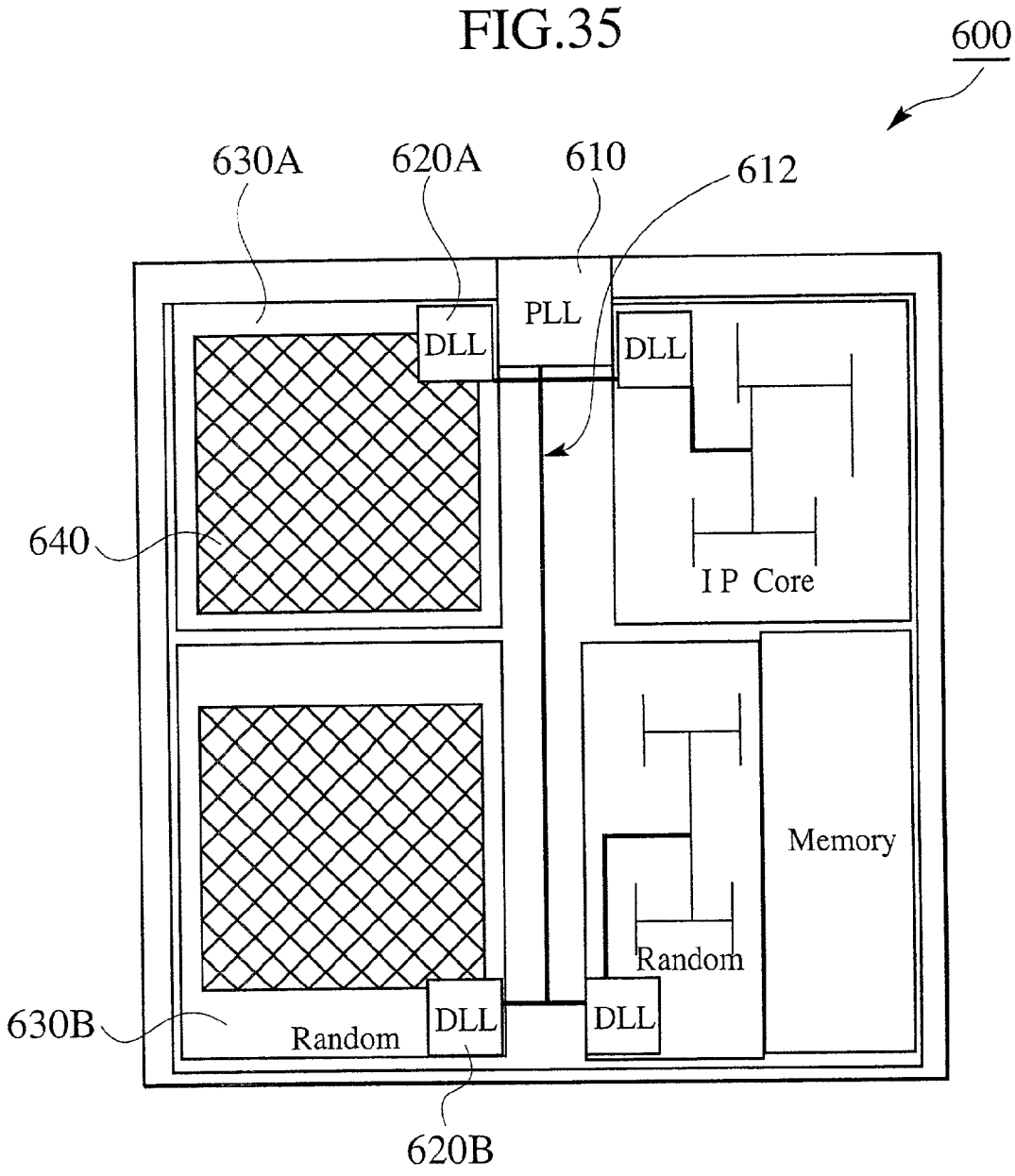
600
630A
620A
610
612
PLL
DLL
DLL
640
I P Core
Memory
Random
630B
Random
DLL
DLL
620B

FIG.36

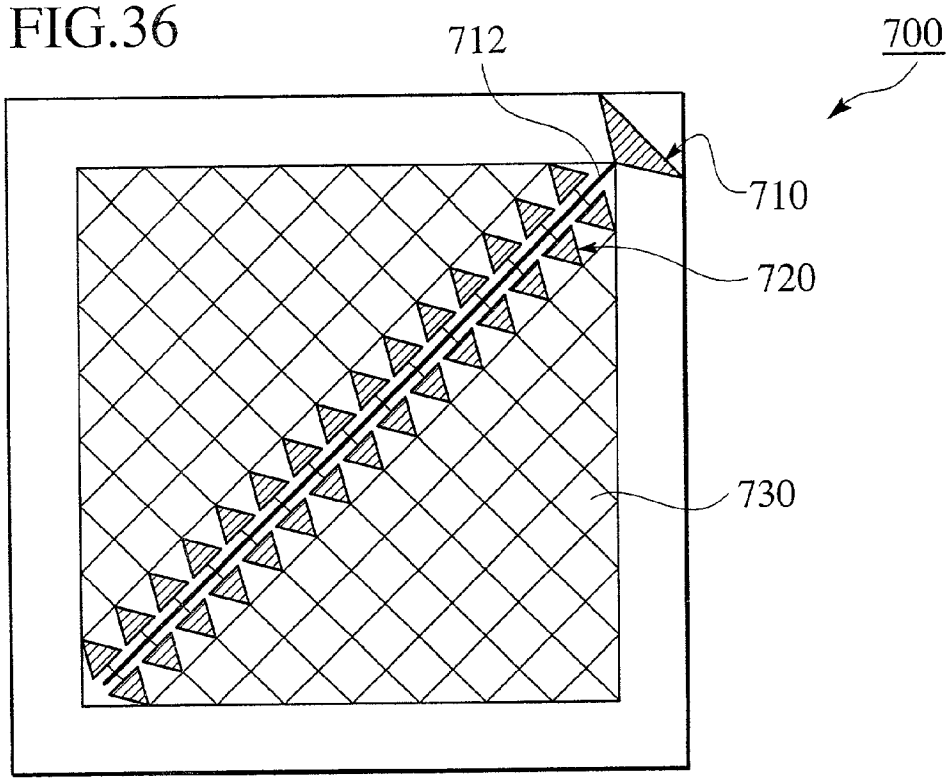

FIG.37

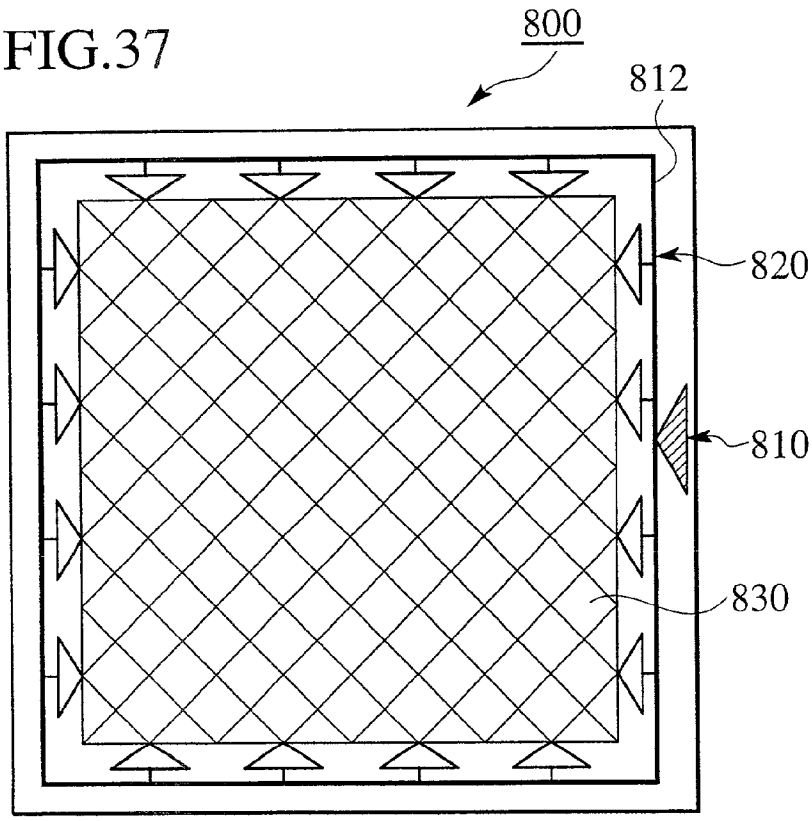

LAYOUT DESIGN SYSTEM, LAYOUT DESIGN METHOD AND LAYOUT DESIGN PROGRAM OF SEMICONDUCTOR INTEGRATED CIRCUIT, AND METHOD OF MANUFACTURING THE SAME

CROSS REFERENCE TO RELATED APPLICATIONS

[0001] This application is based upon and claims the benefit of priority from prior Japanese Patent Application P2001-115780 filed on Apr. 13, 2001; the entire contents of which are incorporated by reference herein.

BACKGROUND OF THE INVENTION

[0002] 1. Field of the Invention

[0003] The present invention relates to a layout design system of semiconductor integrated circuits facilitating an automatic selection of a wiring pattern by use of CAD, and more particularly to a layout design system of semiconductor integrated circuits for designing a terminal layout of an oblique wiring pattern, a layout design method, and a layout design program. The present invention further relates to a manufacturing method of semiconductor integrated circuits using the layout design system, layout design method and layout design program.

[0004] 2. Description of the Related Art

[0005] Progress of LSI technologies makes the circuit scale larger, and this causes an increase in an amount of logic design computations for the circuit. Accordingly, as a logic design method capable of effectively utilizing computers, a logic design by use of Computer Aided Design (CAD) has been carried out.

[0006] In designing interconnection of basic horizontal and vertical lines in the orthogonal coordinate system on CAD, horizontal and vertical lines often terminate at an intersection point of two or more orthogonal lines. When the horizontal lines and the vertical lines are formed in different levels in an actual semiconductor device, a via hole must be formed at the terminal portions of the metal lines to connect the horizontal and vertical lines three-dimensionally. As a matter of course, a connection pattern corresponding to the via hole must be defined at the terminal portions of the horizontal and vertical lines even in a layout by use of CAD.

[0007] Generally, if two basic orthogonal lines having an ordinary width W terminate at an intersection, wire terminating process is carried out to extend the ends of the orthogonal lines by W/2.

[0008] **FIGS. 1A** to **1**E illustrate an example of the wire terminating process of the basic orthogonal lines of the minimum width. In **FIG. 1A, a** horizontal line **901** and a vertical line **903** intersect each other and terminate there. In a CAD system, only the intersection point at which the center lines **902** and **904** of the respective lines intersect each other is recognized as an intersection point **908**. The CAD system does not recognize the overlap of the two orthogonal lines at all.

[0009] When, in an actual semiconductor device, the horizontal line **901** is formed in a lower level and the vertical line **902** is formed in an upper level, these two lines must be connected three-dimensionally by use of a via hole. As a matter of course, the CAD layout requires a connection pattern **905** for connecting the two lines. The connection pattern **905** has a bottom metal **901***a* which is a part of the end portion of the line **901** in the lower level, a top metal **903***a*, which is a part of the end portion of the line **903** in the upper level, and an opening pattern (hereinafter, referred to as a "cut pattern" or simply as a "cut") **907** for connecting the top and bottom metals **903***a* and **901***a*.

[0010] In the example of **FIGS. 1A** to **1**E, since the CAD recognizes that the two lines intersect each other, it is possible to define the connection pattern **905** at the intersection point **908** on the layout. However, since an overlapped area where the horizontal and vertical lines **901** and **903** overlap is very small in the state of **FIG. 1**A, even when the via hole is formed based on the connection pattern **905** in the actual semiconductor integrated circuit, the connections of the upper and lower levels and the via hole cannot be achieved successfully.

[0011] To overcome this problem, in the design system of the semiconductor integrated circuits, the ends of the horizontal and vertical lines **901** and **903** are respectively extended by W/2, as shown in **FIG. 1**B, so that the two lines completely overlap at their end portions. Then, wire terminating process is carried out so as to place the connection pattern **905** on the overlapped area, as shown in **FIG. 1C**.

[0012] **FIG. 1D** illustrates the shape of the connection pattern **905** at the end portion of the basic orthogonal lines at which they intersect each other, when viewed from above. Since the connection pattern **905** is placed on the intersection of the basic orthogonal lines, the connection pattern **905** has a square shape when viewed from above. **FIG. 1E** is a side view of the shape of the connection pattern **905**. The lower metal **901***a* and the upper metal **903***a* are connected by the cut **907**.

[0013] **FIG. 2** illustrates another example of wire terminating process of two orthogonal lines having wide widths. In this case, the two wider orthogonal lines intersect and terminate at the intersection point. These wider lines are special lines such as a power source line and a clock line, and subjected to a wire terminating process similarly to general signal lines. A connection pattern **915** is placed on an overlapped area where a wider horizontal line **911** and a wider vertical line **913** intersect. At this time, since the overlapped area is made wider, a plurality of cuts **917** are provided in one connection pattern. Also in this case, both of the horizontal and vertical lines **911** and **913** are extended by W/2, and a metal pattern completely including the connection pattern **915** having the plurality of cuts **917** is placed in the overlapped area.

[0014] It is easy for the CAD system to carry out the wire terminating process to design interconnection consisting of only basic orthogonal lines in the horizontal and vertical directions, as in the examples shown in **FIGS. 1 and 2**.

[0015] However, as the configuration of semiconductor integrated circuits is made finer, higher precision is required in every respect including a manufacturing process and components of a semiconductor integrated circuit. Particularly, a delay component caused by an interconnection (or a wiring) significantly affects the performance of the integrated circuit as the integrated circuit is made finer. Therefore, it is an important subject how to reduce such a delay in the integrated circuit.

[0016] Most of the delay components of the interconnection are caused by a line resistance. The most effective way to reduce the line resistance is to reduce a line length. Accordingly, it has been proposed to use oblique lines, in addition to the basic orthogonal lines extending in the horizontal and vertical directions, to reduce the distance between two points in a semiconductor circuit. There is also a proposal to design a circuit layout using oblique lines on CAD. In this case, as the lines including the oblique lines are made in the form of multi-level structure composed of a larger number of levels, for example, the shape and the forming process of via holes connecting basic orthogonal lines in a lower level and oblique lines in an upper level must be contrived.

[0017] The inventors of the present invention have proposed in U.S patent application Ser. No. 09/338,593 a technique for greatly reducing a line resistance of oblique lines itself. This is achieved by setting the width and film thickness of the oblique line to 2½ times as large as those of the basic orthogonal lines. In this gazette, a technology for fully securing a cut area by contriving the shape of a via hole connecting metal lines of different levels is also proposed. In order to realize a high-speed operation of an integrated circuit, the inventors also proposed a tree-type clock supply line path comprised of a combination of oblique lines and the basic orthogonal lines. **FIG. 3** illustrates a line structure using the oblique lines. As shown in **FIG. 3**, considered is the line structure having a horizontal first-level metal line **921**, a vertical second-level metal line **922**, a horizontal third-level metal line **923**, an oblique fourth-level metal line **924**, and a fifth-level metal line **925** perpendicular to the fourth-level metal line **924**. When the first-level metal line **921**, the second-level metal line **922** and the third-level metal line **923** have a line width W, respectively, the fourth-level metal line **924** and the fifth-level metal line **925** have a line width of 2½W.

[0018] The inventors of the present invention have proposed a wire terminating process method for lines on a layout in U.S. patent application Ser. No. 09/771,050 when oblique lines are used. **FIGS. 4A** to **4**C illustrate the wire terminating process for an oblique line. As shown in **FIG. 4**A, when a horizontal line **941** of a minimum line width extending in the horizontal direction is generated and an oblique line **943** having a line width 2 times as wide as that of the horizontal line **941** and extending at an oblique angle relative to the horizontal line **941** is generated, a cut **947** is provided. **FIG. 4B** is a drawing when the cut **947** is viewed from above, and **FIG. 4C** is a drawing when the cut **947** is viewed laterally. **FIGS. 5A, 5B** and **5**C illustrate an intersection structure of a line with a minimum line width in the oblique line. As shown in **FIG. 5**A, when a horizontal line **941** is generated in a lower level and an oblique line **943** is generated in an upper level, a connection pattern (via) **945** is provided. At this time, a wire terminating process so as to delete a metal at a shaded area is carried out. **FIG. 5B** is a drawing when the connection pattern (via) **945** is viewed from above, and **FIG. 5C** is a drawing when the connection pattern (via) **945** is viewed laterally. At this time, the connection pattern **945** has an upper metal portion **943***a* having a parallelogram shape and a lower metal portion **941***a* having a rectangular shape.

[0019] On the other hand, in the line layout system, there has been one basic VIA shape using the line for each technology. Alternatively, a large VIA using one basic VIA shape (for example, a rectangular shape is typical) in plural has been defined or automatically generated.

[0020] However, in the line layout method using an oblique line, a wide line space is consumed when a line is bent in the same line level, and hence there has been a problem that a degree of line integration is lowered and a data amount in a mask generation operation increases.

[0021] Moreover, in consideration for various line layout methods, the necessity to selectively perform an optional VIA in accordance with a line pattern and to perform a wire terminating process suitable for the respective VIA shapes has been arisen.

SUMMARY OF THE INVENTION

[0022] A layout design system of a semiconductor integrated circuit, comprising: a library information storage unit configured to register a basic via shape list; a technology database storage unit configured to register a list expressing an optimum wire terminating process for each via shape of said basic via shape list registered in said library information storage unit; and a central processing control unit configured to refer to the lists respectively registered in said library information storage unit and said technology database storage unit, select an optimum line processing, and execute a line design.

[0023] A computer implemented layout design method, comprising: preparing a basic via shape list and registering the basic via shape list in a library information storage unit; referring to said basic via shape list registered in said library information storage unit, preparing a list expressing an optimum wire terminating process for each via shape of said basic via shape list, and registering the list in a technology database storage unit; referring to the list registered in said technology database storage unit, and selecting an optimum line processing to perform the selected line processing; and selecting an optimum via.

[0024] A line design program for allowing a computer to execute, comprising: preparing a basic via shape list, and registering the basic via shape list in a library information storage unit; referring to said basic via shape list registered in said library information storage unit, preparing a list expressing an optimum wire terminating process for each via shape of said basic via shape list, and registering the list in a technology database storage unit; referring to the list registered in said technology database storage unit, and selecting an optimum line processing to perform the selected line processing; and selecting an optimum via.

[0025] A computer implemented layout design method, comprising: generating a first line having a first line width and extending in a predetermined direction; generating a second line having a second line width, extending in a direction different from said first line, and having its terminal end overlapping a terminal end of said first line; stretching said first line in a longitudinal direction thereof; stretching said second line in a longitudinal direction thereof by a length ½ times as long as the second line width; deleting a projection from the terminal end of said first line and the terminal end of said second line, the projection protruding from an overlapped area where the terminal end of said first line and the terminal end of said second line overlap; and

setting a connection pattern having a polygon connecting said first and second lines at an intersection point of a longitudinal center line of said first line and a longitudinal center line of said second line.

[0026] A manufacturing method of a semiconductor integrated circuit, comprising: forming a first line extending in a predetermined direction on a semiconductor substrate; forming a level interlayer insulating film on said first line; forming a polygon via hole penetrating through said level interlayer insulating film; forming a connection conductive portion filling said polygon via hole and connecting with said first line; and forming a second line extending at an angle unperpendicularly relative to said first line and having a terminal end connected to said connection conductive portion.

BRIEF DESCRIPTION OF DRAWINGS

[0027] **FIGS. 1A** to **1**E are plan views showing a terminal layout of basic orthogonal lines of a minimum line width, which is produced by a layout design method.

[0028] **FIG. 2** illustrates a terminal layout of basic orthogonal lines with a wide width produced by the layout design method.

[0029] **FIG. 3** illustrates a line structure using oblique lines.

[0030] **FIGS. 4A** to **4**C illustrate wire terminating processs of the oblique lines.

[0031] **FIGS. 5A** to **5**C illustrate intersection structures of lines with a minimum line width in the oblique lines.

[0032] **FIG. 6** is a function block diagram of a layout design system of a semiconductor integrated circuit according to an embodiment of the present invention.

[0033] **FIG. 7** is a function block diagram of a layout design system of a semiconductor integrated circuit according to the embodiment of the present invention, in which a plurality of central processing control units are provided.

[0034] **FIG. 8** is an example of data of a library information storage unit in the layout design system of the semiconductor integrated circuit according to the embodiment of the present invention.

[0035] **FIG. 9** is an example of data of a technology database storage unit in the layout design system of the semiconductor integrated circuit according to the embodiment of the present invention.

[0036] **FIG. 10** is a flowchart showing an external control style in the layout design system of the semiconductor integrated circuit according to the embodiment of the present invention.

[0037] **FIG. 11** is a flowchart showing a layout design module in the layout design system of the semiconductor integrated circuit according to the embodiment of the present invention.

[0038] **FIG. 12** is a flowchart showing a line processing module in the layout design system of the semiconductor integrated circuit according to the embodiment of the present invention.

[0039] **FIG. 13** is a flowchart showing an optimized VIA selection module in the layout design system of the semiconductor integrated according to the embodiment of the present invention.

[0040] **FIGS. 14A** to **14**G illustrate examples of line processing patterns and VIA styles in the layout design system of the semiconductor integrated circuit according to the embodiment of the present invention. **FIGS. 15A** to **15**E are drawings for explaining a layout design method according to a first embodiment of the present invention: **FIG. 15**A and **FIG. 15B** are plan views of oblique lines and horizontal lines; **FIG. 15C** illustrates shapes of the oblique line and the horizontal line after a wire terminating process; and **FIG. 15**D and **FIG. 15E** are a top view and a sectional view showing a shape of a connection pattern.

[0041] **FIGS. 16A** to **16**D show a line layout formed on CAD by a layout design method according to a second embodiment of the present invention.

[0042] **FIGS. 17A and 17B** are drawings for explaining a layout design method according to a third embodiment of the present invention: **FIG. 17A** is a plan view of an oblique line and a horizontal line; and **FIG. 17B** illustrates shapes of the oblique line and the horizontal line after a wire terminating process.

[0043] **FIGS. 18A and 18B** are drawings for explaining a layout design method according to a modification of the third embodiment of the present invention: **FIG. 18A** is a plan view of an oblique line and a horizontal line; and **FIG. 18B** illustrates shapes of the oblique line and the horizontal line after a wire terminating process.

[0044] **FIGS. 19A and 19B** are drawings for explaining a layout design method according to a fourth embodiment of the present invention: **FIG. 19A** is a plan view of an oblique line and a horizontal line; and **FIG. 19B** illustrates shapes of the oblique line and the horizontal line after a wire terminating process.

[0045] **FIGS. 20A and 20B** are drawings for explaining a layout design method according to a modification of the fourth embodiment of the present invention: **FIG. 20A** is a plan view of an oblique line and a horizontal line; and **FIG. 20B** illustrates shapes of the oblique line and the horizontal line after a wire terminating process.

[0046] **FIGS. 21A** to **21**C are drawings for explaining a layout design method according to a fifth embodiment of the present invention: **FIGS. 21A and 21B** are plan views of an oblique line and a horizontal line; and **FIG. 21C** illustrates shapes of the oblique line and the horizontal line after a wire terminating process.

[0047] **FIGS. 22A** to **22**D are drawings for explaining a layout design method according to a sixth embodiment of the present invention: **FIG. 22A** is a plan view of an oblique line and a horizontal line; **FIGS. 22B and 22C** are a top view and a side view showing a shape of a connection pattern; and **FIG. 22D** illustrates a shape of the oblique line and the horizontal line after a wire terminating process.

[0048] **FIGS. 23A** to **23**D are drawings for explaining a layout design method according to a modification of the sixth embodiment of the present invention: **FIG. 23A** is a plan view of an oblique line and a horizontal line; **FIGS. 23B and 23C** are a top view and a side view showing a

shape of a connection pattern; and **FIG. 23D** illustrates a shape of the oblique line and the horizontal line after a wire terminating process.

[**0049**] **FIGS. 24A and 24B** are drawings for explaining a layout design method according to a modification of a seventh embodiment of the present invention: **FIG. 24A** is a plan view of an oblique line and a horizontal line; and **FIG. 24B** illustrates shapes of the oblique line and the horizontal line after a wire terminating process.

[**0050**] **FIGS. 25A and 25B** are drawings for explaining a layout design method according to a modification of an eighth embodiment of the present invention: **FIG. 25A** is a plan view of an oblique line and a horizontal line; and **FIG. 25B** illustrates shapes of the oblique line and the horizontal line after a wire terminating process.

[**0051**] **FIGS. 26A** to **26**D are drawings for explaining a layout design method according to a ninth embodiment of the present invention.

[**0052**] **FIG. 27** is a schematic plan view showing a part of a semiconductor integrated circuit fabricated based on a terminal layout of an oblique line generated by the layout design method of the present invention.

[**0053**] **FIGS. 28A** to **28**C illustrate an exposure mask set according to the embodiment of the present invention, which is fabricated based on a line pattern generated by the layout design method of the present invention.

[**0054**] **FIG. 29** is a sectional view schematically showing a part of a semiconductor interacted circuit having an oblique line structure.

[**0055**] **FIGS. 30A** to **30**H are drawings showing formation steps of the oblique line structure shown in **FIG. 29**.

[**0056**] **FIG. 31** is a plan view of a semiconductor integrated circuit having a clock tree constituted by the oblique lines according to the embodiment of the present invention.

[**0057**] **FIG. 32** is a plan view of a second semiconductor integrated circuit with a larger scale according to the embodiment of the present invention, and shows an example using the clock tree of the oblique line shown in **FIG. 31** for each block.

[**0058**] **FIG. 33** is a plan view of another example of the second semiconductor integrated circuit shown in **FIG. 32**

[**0059**] **FIG. 34** is a plan view of a third semiconductor integrated circuit having a clock mesh using the oblique line according to the embodiment of the present invention.

[**0060**] **FIG. 35** is a plan view of a fourth semiconductor integrated circuit with a lager scale according to the embodiment of the present invention, and shows an example using the clock mesh of the oblique line shown in **FIG. 34** for each block.

[**0061**] **FIG. 36** is a plan view of a fifth semiconductor integrated circuit having a clock mesh using the oblique line structure according to the embodiment of the present invention.

[**0062**] **FIG. 37** is a plan view of a sixth semiconductor integrated circuit having a clock mesh using the oblique line structure according to the embodiment of the present invention.

DETAILED DESCRIPTION OF THE INVENTION

[**0063**] Various embodiments of the present invention will be described with reference to the accompanying drawings. It is to be noted that the same or similar reference numerals are applied to the same or similar parts and elements throughout the drawings, and the description of the same or similar parts and elements will be omitted or simplified.

[**0064**] Generally and as it is in the representation of semiconductor devices, it will be appreciated that the various drawings are not drawn to scale from one figure to another nor inside a given figure, and in particular that the layer thicknesses are arbitrarily drawn for facilitating the reading of the drawings.

[**0065**] In the following descriptions, numerous specific details are set fourth such as specific signal values, etc. to provide a thorough understanding of the present invention. However, it will be obvious to those skilled in the art that the present invention may be practiced without such specific details. In other instances, well-known circuits have been shown in block diagram form in order not to obscure the present invention in unnecessary detail.

SYSTEM CONSTITUTION AND EMBODIMENT OF PROCESSING CONTENTS

[**0066**] The layout design system for the embodiment of the present invention includes an input unit **1**, a display unit **2**, an output unit **3**, a temporary storage unit **4**, a library information storage unit **5**, a technology database storage unit **6**, a Place and Route (P&R: layout) database storage unit **7**, and a central processing control unit **8**, as shown in **FIG. 6**.

[**0067**] In the library information storage unit **5**, a basic VIA shape list is registered, which is obtained from a top view and a sectional view of VIA and defines a size and a shape of the VIA. Specifically, data as shown in **FIG. 8** is registered in the library information storage unit **5**. In the technology database storage unit **6**, a layout design method which shows a wire terminating process most suitable for respective VIA shapes and uses these line widths and VIA sizes as parameters is registered in the form of a list. Specifically, data as shown in **FIG. 9** is registered. In the P & R database storage unit **7**, coordinate data concerning a layout processing is registered.

[**0068**] The central processing control unit **8** executes processings for the layout design system of the semiconductor integrated circuit, and includes a layout design module **8***a*, a line processing module **8***b*, and an optimum VIA selection module **8***c*. The layout design module **8***a* executes general processings such as a line processing and a layout processing which are executed on CAD, in accordance with information input via the input unit **1**. The line processing module **8***b* is a processing module concerning particularly a line in the layout design module **8***a*. The line processing module **8***b* prepares a detailed line route and gives a decision of a design rule violation as to the selected VIA and the wire terminating process. The optimum VIA selection module **8***c* is a processing module concerning selections of the VIA and the wire terminating process, particularly, and selects the VIA in accordance with line intersection conditions.

[**0069**] The input unit **1** is constituted by a keyboard, a mouse, a voice device and the like, and the display unit **2** is

constituted by a liquid crystal display, a CRT display and the like. The output unit **3** is constituted by an ink-jet printer, a laser printer and the like. In the temporary storage unit **4**, a ROM and a RAM are incorporated. The ROM functions as a program memory or the like storing a program executed by the central processing control unit **8**, and the RAM stores data used when the program is executed in the central processing control unit **8** and functions as a data memory used as a work area.

[**0070**] Although there is no illustration in **FIG. 6** for the following module, the central processing control unit **8** also includes a module for controlling the input/output of the input unit **1**, the display unit **2**, the output unit **3**, the temporary storage unit **4**, the library information storage unit **5**, the technology database storage unit **6**, and the P&R database storage unit **7**.

[**0071**] As shown in **FIG. 7**, the central processing control unit **8** may be a multi-processor system including the plurality of central processing control units such as a first central processing control unit **8***k*, a second central processing control unit **81**, a third central processing control unit **8***m*, . . . In this case, the first to third central processing control units **8***k* to **8***m* may include the layout design module **8***a*, the line processing module **8***b*, and the optimum VIA selection module **8***c*, respectively. Alternatively, the respective central processing control units may execute a specified processing module. The layout design system of **FIG. 7** can reduce more loads for the central processing control unit than that of **FIG. 6**, and can execute speedier processings.

[**0072**] A flowchart showing a control style from the outside will be described with reference to **FIG. 10**. An execution order of respective processings is not limited to the following.

[**0073**] (a) First, in step **S101**, reading of the library information storage unit **5** and preparation of the technology database storage unit **6** are instructed via the input unit **1**. Herein, the layout design system refers to the library information storage unit **5** and acquires a basic VIA shape list.

[**0074**] (b) Furthermore, in step **S102**, preparation of a pattern of the wire terminating process method prepared in step **S101** is instructed via the input unit **1**.

[**0075**] (c) Next, in step **S103**, instruction of a basic VIA library is performed based on the wire terminating process pattern prepared in step **S102**, and instruction of the wire terminating process method is performed via the input unit **1** in step **S104**.

[**0076**] (d) Finally, in step **S105**, referring to the technology database storage unit **6**, a layout processing is executed based on the VIA library and the wire terminating process method decided in steps **S103** and **S104**. At this time, data concerning the layout processing is recorded in the P&R database storage unit **7**. Moreover, layout pattern data as to the decided layout is output either to the display unit **2** or to the output unit **3**.

[**0077**] A flowchart of the layout design module **8***a* will be described with reference to **FIG. 11**. An execution order of respective processings is not limited to the following.

[**0078**] (a) In step **S201**, reading of the library information storage unit **5** is performed so as to correspond to step **S101** of **FIG. 10**, and preparation of the technology database storage unit **6** is performed. Herein, library data having various VIA shapes is read, and a suitable layout design method is prepared before execution of an actual line to form the layout design method in the form of a library. At this time, to compress an amount of the library data, the wire terminating process method using the line intersection conditions, the line width, the shape and size of the VIA as parameters is patterned and stored.

[**0079**] (b) Next, a wire terminating process pattern is prepared in step **S202** corresponding to step **S102**.

[**0080**] (c) Next, in step **S203**, an arrangement processing of an element, a bock and a module is executed, and preparation of an outline line route is performed in step **S204**.

[**0081**] (d) Further, preparation of a detailed line route and decisions of an optimum VIA and a wire terminating process are performed in step **S205** in accordance with the outline route prepared in step **S204**.

[**0082**] (e) Finally, in step **S205**, layout pattern data is output as layout results.

[**0083**] In steps **S202** to **S206** of **FIG. 11**, the technology database storage unit **6** and the P&R database storage unit **7** are updated at any time.

[**0084**] A flowchart of the line processing module **8***b* will be explained with reference to **FIG. 12**. The processing in the line processing module **8***b* corresponds to the detailed processing of step **S205** of **FIG. 11**. An execution order of respective processings is not limited to the following.

[**0085**] (a) First, in step **S221**, a line area is decided with reference to the P&R database storage unit **7**, and an outline line route is taken in. In accordance with this, in step **S222**, preparation of a detailed line route is performed.

[**0086**] (b) Based on the detailed line route obtained in step **S222**, selections of an optimum VIA and a wire terminating process are carried out in step **223**.

[**0087**] (c) Next, in step **S224**, calculation of a design cost is performed as to the optimum VIA and the wire terminating process that were decided in step **S223**.

[**0088**] (d) Further, in step **S225**, a design rule is checked. When there is no violation of the design rule in all connections, a processing for the line area is completed, and a design result is stored in the P&R database storage unit **7** in step **S226**. When a degree of an improvement in the design cost in the line area is in a conversion state in spite that all of the design rule violations cannot be removed, the processing of the line area is completed, and a design result is stored in the P&R database storage unit **7** in step **S226**. In step **S225**, when there is a violation in the design rule and the degree of the improvement in the design cost is not converged, the preparation of the detailed line route is performed again in step **S222**.

[**0089**] A flowchart of the optimum VIA selection module **8***c* will be described with reference to **FIG. 13**. A processing of the optimum VIA selection module **8***c* corresponds to the detailed processing of step **S223** of **FIG. 12**. An execution order of respective processings is not limited to the following.

[0090] **FIGS. 14A** to **14**C illustrate example of using octagonal VIA. **FIGS. 14A** to **14**C are plan view of lower level lines **1001** and upper level lines **1002**. **FIGS. 14D** to **14**G illustrate example of using no octagonal VIA. **FIG. 14D** illustrates example of using rectangular via for each orthogonal line **1003** and **1004**. **FIG. 14E** illustrates example for case where oblique line **1005** is used for upper level and orthogonal line **1006** is used for lower level. **FIG. 14F** illustrates example for case where oblique lines **1007** and **1008** is used for upper level. **FIG. 14G** illustrates example for case where upper level is orthogonal line **1009** and lower level is oblique line **1010**.

[0091] (a) First, in step S**241**, it is decided via the input unit **1** whether a VIA applicable to all line directions used, which includes an octagonal VIA, a circular VIA and the like, can be employed. When the lines of 0°, 90°, 45° and 135° series are used and the octagonal VIA can be used, the VIA pattern shown in **FIGS. 14A** to **14**C is selected in step S**242**, and the procedure is completed. In step S**241**, when the octagonal VIS is not used, the procedure advances to step S**243**.

[0092] (b) When it is decided that the lower level is an orthogonal line in step S**243**, and when it is decided that the upper level is an orthogonal line in step S**245**, a VIA pattern D of **FIG. 14D** is selected in step S**246**.

[0093] (c) When it is decided that the lower level is an orthogonal line in step S**243**, and it is decided that the upper level is not an orthogonal line in step S**245**, a VIA pattern E of **FIG. 14E** is selected in step S**247**.

[0094] (d) When it is decided that the lower level is not an orthogonal line in step S**243**, and it is decided that the upper level is not an orthogonal line in step S**244**, a VIA pattern F of **FIG. 14F** is selected in step S**249**.

[0095] (e) When it is decided that the lower level is not an orthogonal line in step S**243**, and it is decided that the upper level is an orthogonal line in step S**244**, a VIA pattern G of **FIG. 14G** is selected in step S**248**.

[0096] In this embodiment of the present invention, the line processing can be performed smoothly by preparing the technology database storage unit **6** before the line processing.

[0097] In addition, in this embodiment of the present invention, it is decided in the optimum VIA selection module **8***c* whether the octagonal VIA is used or not. It may be decided prior to the preparation of the line route whether the octagonal VIA is used or not. For example, when the technology database storage unit **6** is prepared in step S**201** of **FIG. 11**, it is possible to allow the technology database storage unit **6** to decide whether the octagonal VIA is used or not. In this case, since the number of the wire terminating process patterns registered in the technology database storage unit **6** can be reduced, the line processing can be performed more smoothly.

[0098] As described above, it is possible to provide a layout design system and a layout design method of a semiconductor integrated circuit capable of selecting a line layout method using a VIA having an optional shape speedily and effectively, in an actual line processing in which various line widths and line intersection conditions occur.

[0099] Detailed descriptions for the VIA patterns A to G of **FIGS. 14A** to **14**G will be described in first to ninth embodiments of layout design method.

First Embodiment of Layout Design Method

[0100] In a first embodiment of a layout design method, an embodiment of a layout design method in a case where a rectangular VIA is used in lines formed in different levels will be described.

[0101] **FIG. 15A** is a plan view showing a line layout prepared on CAD by the layout design method according to the first embodiment. First, a horizontal line **11** with a minimum width, which extends horizontally, is generated in a lower level. Subsequently, an oblique line **13** with a line width 2½ times as wide as that of the horizontal line **11**, which extends at an oblique angle (an angle of 45° in the first embodiment) relative to the horizontal line **11**, is generated in an upper level. As a matter of course, an oblique line **13** extending obliquely at an angle symmetrical to that of **FIG. 15**A, that is, an angle of 135? relative to the horizontal line **1**, may be generated. An intersection point **18** exists at an intersection of a longitudinal center line **12** of the horizontal line **11** and a longitudinal center line **14** of the oblique line **13**. An end portion of the horizontal line **11** terminates at a point apart from the intersection point **18** by a length $2^{1/2}/2$ times as long as the line width of the horizontal line **11**. An end portion of the oblique line **13** terminates at a point apart from the intersection point **18** by a length ½ times as long as the line width of the horizontal line **11**.

[0102] A terminal end of the oblique line **13** overlaps a terminal end of the horizontal line **11**, and forms an overlapped area. In this overlapped area, a connection pattern (via) **15** for connecting the horizontal and oblique lines **11** and **13** is set at the intersection point **18**. This connection pattern is usually called a via (VIA), and corresponds to a via hole of an actual semiconductor integrated circuit.

[0103] In the layout design method according to the first embodiment, a deletion of a redundancy portion shown in **FIG. 15A** is carried out. In other words, as shown in **FIG. 15**B, the shaded area **19** is deleted in the terminal end of the oblique line **13**. Thus, the shape after the wire terminating process can be obtained, as shown in **FIG. 15C**.

[0104] Shapes of an upper level metal **17***a* and a lower level metal **17***b* are not limited to the square shape shown in **FIG. 15**A, and the shapes thereof may be a rectangular shape. A shape in which apexes of the rectangular metal area are coincident with the edges in the longitudinal direction and in the width direction of the horizontal line **11** and the oblique line **13** may be adopted. Otherwise, the metal area may have a fringe wider than the line widths of the horizontal line **11** and the oblique line **13**. As shown in **FIG. 15**A, the upper level metal **17***a* of the connection pattern **15** uses a square area at the end portion of the oblique line **13**, and the lower level metal **17***b* uses a square area at the end portion of the horizontal line **11**. A cut **17** is set at the overlapped area of the upper and lower level metals **17***a* and **17***b*.

[0105] **FIGS. 15D and 15E** are a top view and a sectional view which define the shape of the connection pattern **15**A with EDA (placement and routing tool). In **FIG. 15**D, the innermost square with a cross mark in the connection pattern

15 is the cut pattern **17**. One side of the connection pattern **15** has a line width equal to that of the horizontal line **11**, and a diagonal line thereof has a length 2 times as long as that of the horizontal line **11**. The cut pattern expresses a cut of a via hole in which a high melting point metal such as doped polysilicon, tungsten (W), molybdenum (Mo), titanium (Ti), or a connection conductive metal such as silicide of the above materials (WSi_2, $MoSi_2$, $TiSi_2$) is buried to connect the horizontal line **11** and the oblique line **13** in an actual semiconductor integrated circuit. Hereinafter, the cut pattern on the layout is simply referred to as a cut. Moreover, as shown in **FIG. 15**E, in the lower and upper levels, the connection pattern **15** has metals with a line width equal to that of the horizontal line **11**, and the upper and lower level metals **17***a* and **17***b* are connected by the cut **17**. The cut **17** is completely blocked by the upper level metal **17***a*. With this constitution, it is possible to prevent the lower level metal **17***b* from melting during a high temperature processing in an actual processing.

[**0106**] A first feature of the layout design method of the pattern shown in **FIGS. 15A** to **15**E is that the horizontal line **11** and the oblique line **13** overlap fully at their terminal ends, and there is no projection protruding from a contour of each line. Since there is no portion protruding from the contour of each line, an increase in coupling capacitance between the lines adjacent to each other and an adverse influence on a substrate capacitance hardly exist. Moreover, there is no waste of line resources in the oblique line at all. Particularly, as shown in **FIG. 15C, a** line can be generated close to the horizontal line **11** because of inexistence of the projection.

[**0107**] A second feature of the layout design method of the pattern shown in **FIGS. 15A** to **15**E is that the connection pattern **15** can be formed to be rectangular mainly. Drawing using the orthogonal line on the same mask requires a very small data amount compared to the case where combinations of oblique lines other than the orthogonal lines each intersecting at a right angle, such as a parallelogram and a lozenge, are used.

[**0108**] Furthermore, this layout design method can prevent melting of the lower level metal in the semiconductor integrated circuit to be manufactured. In addition, the oblique line **13** as the upper level and the horizontal line **11** as the lower level are connected to each other securely. Since the oblique line is used, a speed of a signal arrival to a destination point (for example, a flip-flop) can be made faster.

[**0109**] This layout design method further enhances a degree of line integration compared to the wire terminating process method for lines in which the oblique lines are included, and thus it is possible to provide the layout design method capable of reducing a chip size.

Second Embodiment of Layout Design Method

[**0110**] In a second embodiment of the layout design method, an embodiment of the layout design method in which a rectangular VIA is used in lines of different levels and, particularly, an oblique line has a wider width will be described.

[**0111**] A line layout will be described with reference to **FIGS. 16A** to **16**D.

[**0112**] As shown in **FIG. 16A, a** horizontal line **21** extending horizontally (in a third level) and a vertical line **26** perpendicular to the horizontal line **21** are generated in a lower level (a second level). Next, an oblique line **23** with a wider width, which extends obliquely at an angle unperpendicularly relative to the horizontal and vertical lines **21** and **26**, is generated in an upper level (a forth level). Terminal ends of the horizontal, vertical and oblique lines **21**, **26** and **23** are coincident with each other, and a connection pattern (via) **25** is set at this portion. In this case, the shaded area **27** of the terminal end of the oblique line **23** is deleted, and the connection pattern (via) **25** is set.

[**0113**] As shown in **FIG. 16B, a** horizontal line **31***a* and a horizontal line **31***b* extending horizontally (in a forth level) are generated in the lower level (a third level). Next, an oblique line **33** with a wider width, which extends obliquely at an angle unperpendicularly relative to the horizontal lines **31***a* and **31***b*, is generated in the upper level. In this case, the shaded area **36** at the terminal end of the oblique line **33** is deleted, and a connection pattern (via) **35** is set. In **FIG. 16**B, the connection patterns (via) **35***a* and **35***b* may be set at the portion where the terminal ends of the horizontal line **31***a* and the oblique line **33** overlap, and the connection pattern (via) **35***c* may be set at the portion where the terminal ends of the horizontal line **31***b* and the oblique line **33** overlap.

[**0114**] As shown in **FIG. 16C, a** horizontal line **41** extending horizontally is generated in the lower level. Next, an oblique line **43** with a wider width, which extends obliquely at an angle unperpendicularly relative to the horizontal line **41**, is generated in the upper level. The terminal ends of the horizontal line **41** and the oblique line **43** are coincident with each other, and a connection pattern (via) **45** is set at this portion. In this case, the shaded area **46** at the terminal end of the oblique line **43** is deleted, and the connection pattern (via) **45** is set.

[**0115**] As shown in **FIG. 16D, a** horizontal line **51***a* and a horizontal line **51***b* which extend horizontally (in a forth level) are generated in the lower level (a third level). Next, an oblique line **53** with a wider width, which obliquely extends at an angle unperpendicularly relative to the horizontal lines **51***a* and **51***b*, is generated in the upper level. In this case, the shaded area **56** at the terminal end of the oblique line **53** is deleted, and a connection pattern (via) **55** is set. Connection patterns (via) **55***a* and **55***c* are set at the portion where the horizontal line **51***a* and the oblique line **53** overlap, and connection patterns (via) **55***d* and **55***f* are set at the portion where the horizontal line **51***b* and the oblique line **53** overlap. In addition, in accordance with the line width of the oblique line **53**, connection patterns (via) **55***b* and **55***e* may be set at the portion that is a middle position between the connection patterns (via) **55***a* and **55***c* and at the position that is a middle position between the connection patterns (via) **55***d* and **55***f*, respectively. In the example of **FIG. 16**D, though one via is set at the middle position, it is not always necessary to set the via in accordance with the line width of the oblique line **53**, and two or more vias may be set.

Third Embodiment of Layout Design Method

[**0116**] In a third embodiment of the layout design method, an embodiment of the layout design method in which a rectangular VIA is used for lines formed of the same level, and, particularly, an oblique line has a wide width will be described.

[0117] **FIG. 17A** is a plan view showing a line layout prepared on CAD by the layout design method according to the third embodiment. First, a horizontal line **61** extending horizontally is generated. Subsequently, an oblique line **63** which has a wider line width than the horizontal line **61** and obliquely extends at an angle unperpendicularly relative to the horizontal line **61** is generated. An intersection point **68** exists at an intersection of a longitudinal center line **62** of the horizontal line **61** and a longitudinal center line **64** of the oblique line **63**. An end portion of the horizontal line **61** terminates at a position apart from the intersection point **68** by a length ½ times as long as the line width of the oblique line **63**. An end portion of the oblique line **63** terminates at a position apart from the intersection point **68** by a length ½ times as long as the line width of the horizontal line **61**. A terminal end of the oblique line **63** overlaps a terminal end of the horizontal line **61**, thus forming an overlapped area. In this overlapped area, a turn via **65** connecting the horizontal line **61** and the oblique line **63** is set at the intersection point **68**.

[0118] In the layout design method according to the third embodiment, a deletion of a redundancy portion is performed. Specifically, as shown in **FIG. 17**A, the shaded area **69** is deleted in the terminal end of the oblique line **63**. Thus, the shape after the wire terminating process is obtained as shown in **FIG. 17B**.

[0119] A first feature of the layout design method of the pattern shown in **FIGS. 17A and 17B** is that the horizontal line **61** and the oblique line **63** fully overlap in their terminal ends, and there is no projection protruding from a contour of each line. Since there is no portion protruding from the contour of each line, an increase in coupling capacitance between the lines adjacent to each other and an adverse influence on a substrate capacitance hardly exist. Moreover, there is no waste of line resources in the oblique line at all. Particularly, as shown in **FIG. 17B, a** line can be generated close to the horizontal line **61** because of inexistence of the projection.

[0120] A second feature of the layout design method of the pattern shown in **FIGS. 17A and 17B** is that the turn via **65** can be formed to be rectangular mainly. Drawing using the orthogonal line on the same mask requires a very small data amount compared to the case where combinations of oblique lines other than the orthogonal lines each intersecting at a right angle, such as a parallelogram and a lozenge, are used.

[0121] As a modification of the third embodiment, an embodiment of the layout design method in which a rectangular VIA is used in lines of the same level and particularly a horizontal line has a wider width will be described.

[0122] **FIG. 18A** is a plan view showing a line layout prepared on CAD **6** by the layout design method according to the modification of the third embodiment. A horizontal line **71** having a wider line width, which extends horizontally, is generated. Subsequently, an oblique line **73** with a narrower line width compared to the horizontal line **71**, which extends obliquely at an angle unperpendicularly relative to the horizontal line **71**, is generated. An intersection point **78** exists at an intersection of a longitudinal center line **72** of the horizontal line **71** and a longitudinal center line **74** of the oblique line **73**. An end portion of the horizontal line **71** terminates at a position apart from the intersection point **78** by a length ½ times as long as the line width of the oblique line **73**. An end portion of the oblique line **73** terminates at a position apart from the intersection point **78** by a length ½ times as long as the line width of the horizontal line **71**. A terminal end of the oblique line **73** overlaps a terminal end of the horizontal line **71**, and forms an overlapped area. In this overlapped area, a turn via **75** connecting the horizontal line **71** and the oblique line **73** is set at the intersection point **78**.

[0123] In the modification of the third embodiment, a deletion of a redundancy portion is performed. Specifically, as shown in **FIG. 18**A, the shaded area **79** is deleted in the terminal end of the horizontal line **71** and the terminal end of the oblique line **73**. Thus, the shape after the wire terminating process is obtained as shown in **FIG. 18B**.

Fourth Embodiment of Layout Design Method

[0124] In a fourth embodiment of the layout design method, an embodiment of the layout design method in a case of lines in the same level.

[0125] **FIG. 19A** is a plan view showing a line layout prepared on CAD by the layout design method according to the fourth embodiment. First, a first horizontal line **81***a* with a minimum line width, which extends horizontally, is generated. Subsequently, a first oblique line **83***a* with the same line width as that of the first horizontal line **81***a*, which extends obliquely at an angle unperpendicularly relative to the first horizontal line **81***a*, is generated. An intersection point **88***a* exists at an intersection of a longitudinal center line **82***a* of the first horizontal line **81***a* and a longitudinal center line **84***a* of the first oblique line **83***a*. An end portion of the first horizontal line **81***a* terminates at a position apart from the intersection point **88***a* by a length ½ times as long as the line width of the first oblique line **83***a*. An end portion of the first oblique line **83***a* terminates at a position apart from the intersection point **88***a* by a length ½ times as long as the line width of the first horizontal line **81***a*. A terminal end of the first oblique line **83***a* overlaps a terminal end of the first horizontal line **81***a*, and forms an overlapped area. In this overlapped area, a first turn via **85***a* connecting the first horizontal line **81***a* and the first oblique line **83***a* is set at the intersection point **88***a*. Moreover, the shaded area **89** is deleted in the terminal end of the first horizontal line **81***a* and the terminal end of the first oblique line **83***a*.

[0126] A second horizontal line **81***b* with a minimum line width, which extends horizontally, is generated. Subsequently, a second oblique line **83***b* with a line width 2½ times as long as that of the second horizontal line **81***b*, which extends obliquely at an angle unperpendicularly relative to the second horizontal line **81***b*, is generated. An intersection point **88** exists at an intersection of a longitudinal center line **82***b* of the second horizontal line **81***b* and a longitudinal center line **84***b* of the second oblique line **83***b*. An end portion of the second horizontal line **81***b* terminates at a position apart from the intersection point **88***b* by a length ½ times as long as the line width of the second oblique line **83***b*. An end portion of the second oblique line **83***b* terminates at a position apart from the intersection point **88***b* by a length ½ times as long as the line width of the second horizontal line **81***b*. A terminal end of the second oblique line **83***b* overlaps a terminal end of the second horizontal line **81***b*, and forms an overlapped area. In this overlapped area, a second turn via **85***b* connecting the second horizontal line

81*b* and the second oblique line **83***b* is set at the intersection point **88***b*. Moreover, the shaded area is deleted in the terminal end of the second oblique line **83***b*.

[**0127**] Thus, the shape after the wire terminating process as shown in **FIG. 19B** is obtained.

[**0128**] A feature of the layout design method of the pattern shown in **FIGS. 19A and 19B** is that the horizontal lines **81***a* and **81***b* and the oblique lines **83***a* and **83***b* fully overlap in their terminal ends, and there is no projection protruding from a contour of each line. Since there is no portion protruding from the contour of each line, an increase in coupling capacitance between the lines adjacent to each other and an adverse influence on a substrate capacitance hardly exist. Moreover, there is no waste of line resources in the oblique line at all.

[**0129**] As a modification of the fourth embodiment, an embodiment of the layout design method in which a rectangular VIA is used in lines of the same level and particularly a horizontal line has a wider width will be described.

[**0130**] **FIG. 20A** is a plan view showing a line layout prepared on CAD by the layout design method according to the modification of the fourth embodiment. A horizontal line **91** having a wider line width, which extends horizontally, is generated. Subsequently, an oblique line **93** with a narrower line width compared to the horizontal line **91**, which extends obliquely at an angle unperpendicularly relative to the horizontal line **91**, is generated. An intersection point **98** exists at an intersection of a longitudinal center line **92** of the horizontal line **91** and a longitudinal center line **94** of the oblique line **93**. An end portion of the horizontal line **91** terminates at a position apart from the intersection point **98** by a length ½ times as long as the line width of the oblique line **93**. An end portion of the oblique line **93** terminates at a position apart from the intersection point **98** by a length ½ times as long as the line width of the horizontal line **91**. A terminal end of the oblique line **93** overlaps a terminal end of the horizontal line **91**, and forms an overlapped area. In this overlapped area, a turn via **95** connecting the horizontal line **91** and the oblique line **93** is set at the intersection point **98**.

[**0131**] In the modification of the fourth embodiment, a deletion of a redundancy portion is performed. Specifically, as shown in **FIG. 20**A, the shaded **99** area is deleted in the terminal end of the horizontal line **91** and the terminal end of the oblique line **93**. Thus, the shape after the wire terminating process is obtained as shown in **FIG. 20B**.

Fifth Embodiment of Layout Design Method

[**0132**] In a fifth embodiment of the layout design method, an embodiment in which a rectangular VIA is used in lines of different levels, and a horizontal line and an oblique line have wider line widths particularly will be described.

[**0133**] **FIG. 21A** shows a line layout prepared on CAD by the layout design method according to the fifth embodiment. As shown in **FIG. 16A, a** horizontal line **101** with a wider line width, which extends horizontally, is generated in a lower level (a third level). Next, an oblique line **103** with a wider line width, which extends obliquely at an angle unperpendicularly relative to the horizontal line **101**, is generated in an upper level (a forth level). The horizontal line **101** and the oblique line **103** may have the same line width, or alternatively may have the different line widths. An intersection point **108** exists at an intersection of a longitudinal center line **102** of the horizontal line **101** and a longitudinal center line **104** of the oblique line **103**. An end portion of the horizontal line **101** terminates at a position apart from the intersection point **108** by a length ½ times as long as the line width of the oblique line **103**. An end portion of the oblique line **103** terminates at a position apart from the intersection point **108** by a length ½ times as long as the line width of the horizontal line **101**.

[**0134**] As shown in **FIG. 21**B, terminal ends of the horizontal and oblique lines **101** and **103** are coincident with each other, and an overlapped area is set at this portion. In this case, the shaded area **106** of the terminal end of the oblique line **103** is deleted, and a plurality of connection patterns (via) **105** are set at the overlapped area. The number of the set connection patterns (via) **105** depends on a size of the overlapped area. Thus, the shape after the wire terminating process as shown in **FIG. 21C** is obtained.

Sixth Embodiment of Layout Design Method

[**0135**] In sixth to eighth embodiments of the layout design method, described are embodiments of the layout design method for a horizontal line and an oblique line, in which the most suitable octagonal VIA is used when lines in directions of 0°, 90°, 45°and 135° are used.

[**0136**] **FIG. 22A** shows a line layout prepared on CAD by the layout design method according to the sixth embodiment of the layout design method. First, a horizontal line **111** with a minimum line width, which extends horizontally, is generated in a lower level. Subsequently, an oblique line **113** with the same line width as that of the horizontal line **111**, which extends obliquely at an angle unperpendicularly relative to the horizontal line **111**, is generated in an upper level. An intersection point **118** exists at an intersection of a longitudinal center line **112** of the horizontal line **111** and a longitudinal center line **114** of the oblique line **113**. An end portion of the horizontal line **111** terminates at a position apart from the intersection point **118** by a length **112** times as long as the line width of the oblique line **113**. An end portion of the oblique line **113** terminates at a position apart from the intersection point **118** by a length ½ times as long as the line width of the horizontal line **111**. A terminal end of the oblique line **113** overlaps a terminal end of the horizontal line **111**, and forms an overlapped area. In this overlapped area, a connection pattern (via) **115** connecting the horizontal line **111** and the oblique line **113** is set at the intersection point **118**. Moreover, in the terminal ends of the horizontal and oblique lines **111** and **113**, the shaded area **119** is deleted. Thus, the connection pattern (via) **115** forms an octagon. As a result, the shape after the wire terminating process as shown in **FIG. 22D** is obtained.

[**0137**] **FIGS. 22B and 22C** are a top view and a sectional view which define the shape of the connection pattern (via) **115** with EDA (placement and routing tool). In **FIG. 22**B, the innermost octagon of the connection pattern (via) **115** is a cut **117**. In addition, as shown in **FIG. 22**C, the connection pattern (via) **115** has metals with the same line widths as those of the horizontal line **111** and the oblique line **113** in lower and upper levels, and the upper level metal **117***a* and the lower level metal **117***b* are connected by the out **117**. The cut **117** is blocked by the upper level metal **117***a* completely.

With this constitution, it is possible to prevent the lower level metal **117***b* from melting during a high temperature processing in an actual processing.

[**0138**] **FIG. 23A** shows a line layout prepared on CAD by a modification of the sixth embodiment. First, a horizontal line **121** with a minimum line width, which extends horizontally, is generated in a lower level. Subsequently, an oblique line **123** with a line width 2½ times as wide as that of the horizontal line **121**, which extends obliquely at an angle unperpendicularly relative to the horizontal line **121**, is generated in an upper level. An intersection point **128** exists at an intersection of a longitudinal center line **122** of the horizontal line **121** and a longitudinal center line **124** of the oblique line **123**. An end portion of the horizontal line **121** terminates at a position apart from the intersection point **128** by a length ½ times as long as the line width of the oblique line **123**. An end portion of the oblique line **123** terminates at a position apart from the intersection point **128** by a length ½ times as long as the line width of the horizontal line **121**. A terminal end of the oblique line **123** overlaps a terminal end of the horizontal line **121**, and forms an overlapped area. In this overlapped area, a connection pattern (via) **125** connecting the horizontal line **121** and the oblique line **123** is set at the intersection point **128**. Moreover, in the terminal end of the horizontal line **121** and the terminal end of the oblique line **123**, the shaded area **129** is deleted. Thus, the connection pattern (via) **125** forms an octagon. As a result, the shape after the wire terminating process as shown in **FIG. 23D** is obtained.

[**0139**] **FIGS. 23B and 23C** are a top view and a side view which define the shape of the connection pattern (via) **125** with EDA (placement and routing tool). In **FIG. 23**B, the innermost octagon of the connection pattern (via) **125** is a cut **127**. In addition, as shown in **FIG. 23**C, the connection pattern (via) **125** has metals with the same line width as that of the horizontal line **121** in lower and upper levels, and the upper level metal **127***a* and the lower level metal **127***b* are connected by the cut **127**.

[**0140**] A first feature of the layout design method of the pattern shown in **FIGS. 22A** to **22**D and **FIGS. 23A** to **23**D is that the horizontal lines **111** and **121** and the oblique lines **113** and **123** fully overlap in their terminal ends, and there is no projection protruding from a contour of each line. Since there is no portion protruding from the contour of each line, an increase in coupling capacitance between the lines adjacent to each other and an adverse influence on a substrate capacitance hardly exist. Moreover, there is no waste of line resources in the oblique line at all. Particularly, as shown in **FIGS. 22D and 23D**, a line can be generated close to the horizontal lines **111** and **121** because of inexistence of the projection.

Seventh Embodiment of Layout Design Method

[**0141**] In a seventh embodiment of the layout design method, an embodiment of the layout design method of a horizontal line and an oblique line in a case where an octagonal VIA is used in the lines of the same level will be described.

[**0142**] **FIG. 24A** shows a line layout prepared on CAD by the layout design method according to the seventh embodiment. First, a horizontal line **131** with a minimum line width, which extends horizontally, is generated. Subsequently, an oblique line **133** with a different line width from that of the horizontal line **131**, which extends obliquely at an angle unperpendicularly relative to the horizontal line **131**, is generated. An intersection point **138** exists at an intersection of a longitudinal center line **132** of the horizontal line **131** and a longitudinal center line **134** of the oblique line **133**. An end portion of the horizontal line **131** terminates at a position apart from the intersection point **138** by a length ½ times as long as the line width of the oblique line **133**. An end portion of the oblique line **133** terminates at a position apart from the intersection point **138** by a length ½ times as long as the line width of the horizontal line **131**. A terminal end of the oblique line **133** overlaps a terminal end of the horizontal line **131**, and forms an overlapped area. In this overlapped area, a turn via **135** connecting the horizontal line **131** and the oblique line **133** is set at the intersection point **138**. Moreover, the shaded area **139** is deleted in the terminal end of the horizontal line **131** and the terminal end of the oblique line **133**. Thus, the turn via **135** forms an octagon. As a result, the shape after the wire terminating process as shown in **FIG. 24B** is obtained.

Eighth Embodiment of Layout Design Method

[**0143**] In an eighth embodiment of the layout design method, an embodiment of the layout design method of a horizontal line, a vertical line and an oblique line in a case where an octagonal VIA is used in branch lines in three or more levels will be described.

[**0144**] **FIG. 25A** shows a line layout prepared on CAD by the layout design method according to the eighth embodiment. First, a vertical line **145** with a minimum line width, which extends vertically, is generated in a second level. Subsequently, a horizontal line **141** with a minimum line width, which extends horizontally, is generated in a third level. Next, an oblique line **143** with a line width different from the minimum line width, which extends obliquely at an angle unperpendicularly relative to the horizontal line **141** and the vertical line **145**, is generated in a fourth level. An intersection point **148** exists at an intersection of a longitudinal center line **142** of the horizontal line **141**, a longitudinal center line **146** of the vertical line **145** and a longitudinal center line **144** of the oblique line **143**. The horizontal line **141** and the vertical line **145** terminate at a position apart from the intersection point **148** by a length ½ times as long as the line width of the oblique line **143**. The oblique line **143** terminates at a position apart from the intersection point **148** by a length ½ times as long as the line width of the horizontal line **141** and the vertical line **145**. A terminal end of the oblique line **143** overlaps terminal ends of the horizontal line **141** and the vertical line **145**, and forms an overlapped area. In this overlapped area, a connection pattern (via) **147** connecting the horizontal line **141**, the vertical line **145** and the oblique line **143** is set at the intersection point **148**. Moreover, in the terminal ends of the horizontal line **141**, the vertical line **145** and the oblique line **143**, the shaded area **149** is deleted. Thus, the connection pattern (via) **147** forms an octagon. As a result, the shape after the wire terminating process as shown in **FIG. 25B** is obtained.

[**0145**] As described in the seventh and eighth embodiments, the octagonal via can be used in the lines of all of the patterns. In the octagonal via, there is no waste of the line

recourses at all compared to the rectangular via, lozenge via and parallelogram via, and the lines can be connected by a via having a minimum area.

Ninth Embodiment of Layout Design Method

[0146] In a ninth embodiment of the layout design method, an embodiment of the layout design method of a horizontal line, a vertical line and an oblique line in a case where a VIA comprising an octagonal metal and a rectangular cut is used in branch lines in two or more levels will be described.

[0147] **FIG. 26A** is a top view of a VIA used by the layout design method according to the ninth embodiment. As shown in **FIG. 26A, a** rectangular cut **162** and a metal **161** are provided. The metal **161** has a shape obtained by cutting off four corners of the cut **162**, and forms an octagon having edges **163***a* to **163***h*.

[0148] **FIGS. 26B** to **26**D show a line layout prepared on CAD by the layout design method according to the ninth embodiment.

[0149] As shown in **FIG. 26**B, first, a vertical line **152** with a line width W, which extends vertically, is generated in an upper level, and a horizontal line **153** with the line width W, which extends horizontally, is generated in a lower level. Herein, the VIA shown in **FIG. 26A** is disposed on an intersection point **151** where a longitudinal center line **154** of the vertical line **152** and a longitudinal center line **155** of the horizontal line **153** intersect. In **FIG. 26**B, the edge **163***a* of the metal **161** and a terminal end of the vertical line **152** are overlapped, and the edge **163***g* of the metal **161** and a terminal end of the horizontal line **153** are overlapped.

[0150] As shown in **FIG. 26**C, first, an oblique line **156** with a line width W', which extends obliquely, is generated in the upper level, and a horizontal line **153** with the line width W, which extends horizontally, is generated in the lower level. Herein, the VIA shown in **FIG. 26A** is disposed on the intersection point **151** where a longitudinal center line **157** of the oblique line **156** and the longitudinal center line **155** of the horizontal line **153** intersect. In **FIG. 26**C, the edge **163***b* of the metal **161** and a terminal end of the oblique line **156** are overlapped, and the edge **163***g* of the metal **161** and the terminal end of the horizontal line **153** are overlapped.

[0151] As shown in **FIG. 26**D, first, the oblique line **156** with the line width W', which extends obliquely, is generated in the lower level, and an oblique line **158** with the line width W', which extends obliquely in a different direction from the oblique line **156**, is generated in the upper level. Herein, the VIA shown in **FIG. 26A** is disposed on the intersection point **151** where the longitudinal center line **157** of the oblique line **156** and a longitudinal center line **159** of the oblique line **158** intersect. In **FIG. 26**D, the edge **163***b* of the metal **161** and the terminal end of the oblique line **156** are overlapped, and the edge **163***h* of the metal **161** and a terminal end of the oblique line **158** are overlapped.

[0152] In the ninth embodiment, the horizontal line, the vertical line and the oblique line are connected to any of other lines among these horizontal, vertical and oblique lines, a countermeasure can be taken by use of the octagonal via. Accordingly, since the same via can be used for all lines, a cost can be decreased.

Embodiment of Method of Manufacturing Semiconductor Integrated Circuit

[0153] An example in which an oblique line structure is formed on a semiconductor substrate and a semiconductor integrated circuit is manufactured by use of a mask manufactured based on a layout by the above described automatic design method will be described below.

[0154] As shown in **FIG. 27**, an oblique line structure in which an oblique line **173** and a basic orthogonal line including a horizontal line **171** are intermingled on a transistor area **172** of a cell (semiconductor integrated circuit) **170** is schematically shown, and a detailed line structure and the like are omitted.

[0155] To prepare this oblique line structure, design data of a mask pattern generated by the automatic design method of the foregoing line pattern is input to a computer of a pattern generator such as an optical exposure apparatus, an electron beam exposure apparatus and an X-ray exposure apparatus, and a predetermined exposure mask (reticle) may be drawn by use of the design data. The reticle is prepared by ten to several tens or more in number according to manufacturing processes and contents of the semiconductor integrated circuit. **FIGS. 28A** to **28**C show an exposure mask set **175** which shows three reticles extracted from a part of such a plurality of reticle sets. For convenience of descriptions, a part of the mask pattern of each mask is illustrated.

[0156] The mask set **175** shown in **FIGS. 28A** to **28**C includes a first mask **175**A, a second mask **175**B and a third mask **175**C. In the first mask **175**A, an opaque pattern (light shielding area) **176**A serving as a horizontal line pattern (first level line) **176**A extending horizontally is formed of a chromium (Cr) film or the like on a mask substrate such as quartz glass. In an opaque area, the second mask **175**B has an opening portion **176**B serving as a cut pattern of a via hole. The third mask **175**C has an opaque pattern composed of an oblique line pattern **176**C extending obliquely at an angle of 45° or 135° relative to the horizontal line pattern. The design data is constituted so that a terminal end of the oblique line pattern **176**C, a position of the cut pattern **176**B and a terminal end of the horizontal line pattern **176**A overlap when the first to third masks are overlapped.

[0157] It is possible to realize the oblique line structure as shown in **FIG. 27** by use of a series of mask sets (reticle set) including the mask set **175** shown in **FIGS. 28A** to **28**C. To form transistor portions and other line structures, though other mask sets are, as a matter of course, necessary, descriptions thereof are omitted.

[0158] As shown in **FIG. 29**, an oblique line structure **180** includes: a basic orthogonal line **181** extending horizontally or vertically, which is disposed on a first level interlayer insulating film **191** son a Si substrate **190**; a second level interlayer insulating film **194** disposed on the basic orthogonal line **181**; an oblique line **183** disposed on the second level interlayer insulating film **194**, which is composed of oblique lines extending obliquely at an angle of 45° or 135° relative to the basic orthogonal line **181**; a via hole **185** formed so as to penetrate through an insulating film **182**, which connects the basic orthogonal line **181** and the oblique line **183**; and a connection conductive member buried in the via hole. A passivation film or a third level interlayer insulating film **199** is formed on the oblique line **183**.

[0159] A connection conductive portion is formed by the via hole **185** and the connection conductive member. The connection conductive portion can be formed at one or more positions including at least an intersection point of a longitudinal center line of the basic orthogonal line **181** and a longitudinal center line of the oblique line **183**.

[0160] Note that the technical terms "the first level interlayer insulating film" and "the second level interlayer insulating film" are adopted in consideration for convenience for explanations. Actually, it will do that another level interlayer insulating film and a metallic line film disposed under the first and second level interlayer insulating films are included.

[0161] Referring to **FIGS. 30A** to **30**H, processes for forming the oblique line structure **180** of **FIG. 29** will be described.

[0162] (a) As shown in **FIG. 30**A, by sputtering or vacuum evaporation, a first-level metallic film **192** such as Al alloy is first deposited on the Si substrate **190** covered with the first level interlayer insulating film **191** such as an oxide film (SiO_2). The first-level metallic film **192** is deposited by sputtering and vacuum evaporation. Furthermore, a positive-type resist **193** is spin-coated to cover the first-level metallic film **192**.

[0163] (b) Next, the Si substrate **190** is disposed on an exposure stage of an exposure apparatus such as a stepper, and the positive-type resist **193** is exposed and developed by use of the reticle (first mask) **175**A having the horizontal line pattern. As a result, the resist in a portion corresponding to the horizontal line pattern remains as shown in **FIG. 30B**.

[0164] (c) Using the photoresist pattern in this state as a mask, the first-level metallic film **192** is etched by reactive ion etching (RIE), and then the resist is removed. Thus, the horizontal line **182** is formed as shown in **FIG. 30C**.

[0165] (d) Next, the second level interlayer insulating film **194** such as an oxide film, Phosphosilicate-glass (PSG) and Boro-phosphate-silicate-glass (BPSG) is deposited on the horizontal line **181** by CVD or the like. Then, as shown in **FIG. 30**D, the second level interlayer insulating film **194** is covered with a positive-type resist **195**. When a negative-type resist **195** is used in stead of the positive-type resist, it is natural that the second mask **175**B shown in **FIG. 28B** is a mask in which black and white turn over.

[0166] (e) The Si substrate **190** is introduced onto the exposure stage of the exposure apparatus again, and a cut pattern is exposed and developed by use of the second mask **175**B. As shown in **FIG. 30E, a** photoresist pattern in which only a resist corresponding to an opening pattern of the cut is removed is completed. With this photoresist as a mask, a via hole **196** is formed in the second level interlayer insulating film **194** by etching such as RIE.

[0167] (f) Thereafter, the positive-type resist **195** is removed, and the via hole **196** is filled with the connection conductive member such as tungsten (W) by use of a CVD method, a sputtering method and a vacuum evaporation method as shown in **FIG. 30F**. Thereafter, the surface of the resultant structure is flattened by a chemical mechanical polishing (CMP) method or the like.

[0168] (g) As shown in **FIG. 30G, a** second-level metallic film **197** such as Al alloy is formed on the second level interlayer insulating film **194** and the connection conductive member by sputtering and vacuum evaporation. Moreover, a positive-type resist **198** is spin-coated thereon.

[0169] (h) The oblique line pattern is exposed and developed by use of the third mask **175**C in the stepper. As a result, a portion of the resist corresponding to the oblique line pattern remains. In this state, the second-level metallic film **197** is etched by use of RIE, and the oblique line structure **183** is formed as shown in **FIG. 30H**. Thereafter, a passivation film or a third level interlayer insulating film such as an oxide film, PSG, BPSG, a nitride film (Si_3N_4), a polyimide film or the like is deposited on the oblique line structure **183** by use of the CVD method.

[0170] The example in which the first and second-level metallic films **181** and **197** are connected by the connection conductive member was described in the above. It is natural that the second-level metallic film and the third-level metallic film formed thereon may be connected, and the third-level metallic film and another metallic film formed thereon such as a fourth-level metallic film may be connected. Moreover, as described already, metallic films under the first-level metallic film **181** may exist, and it is natural that connections of these metallic films and the above metallic films are possible.

[0171] In addition, although the method of manufacturing a semiconductor integrated circuit using the exposure mask set **175** was described, a method will do, in which a drawing apparatus is directly driven with the foregoing design data without using the exposure mask set **175**, and drawing is performed directly onto a semiconductor wafer.

[0172] Furthermore, it is easily understood from the purpose of the present invention that at least one of the first and second-level metallic films **181** and **197** may be a line other than Al alloy, such as Damascus line of copper (Cu).

[0173] Concrete examples of the semiconductor integrated circuit using the layout design method of the present invention will be described below.

Example of First Semiconductor Integrated Circuit

[0174] As shown in **FIG. 31, a** first semiconductor integrated circuit **200** comprises: a Phase Locked Loop (PLL) **210** positioned at a corner of a semiconductor chip; a main clock line **201** which extends obliquely from the PLL **210** to the-center of the chip at an angle of 45° relative to a basic orthogonal coordinate axis and terminates at the center of the chip; and a clock tree line which branches symmetrically so as to extend from a terminal end C of the main clock line obliquely at angles of 45° and 135° relative to the basic orthogonal coordinate axis. In **FIG. 31**, reference numerals **1** to **5** represented in bold face type indicate a branch class of the clock tree line.

[0175] Specifically, an oblique line **202** of a second branch class symmetrically extends from the terminal end C of the main clock line **201** in a direction perpendicular to the main clock line **201**. Oblique lines **203***a* and **203***b* of a third branch class extend from both ends of the oblique line **202** symmetrically with the terminal end C of the main clock line **201** in a direction perpendicular to the oblique line **202**. Furthermore, oblique lines **204***a* to **204***d* of a fourth branch class extend from both ends of each of the oblique lines **203***a* and **203***b* symmetrically with the main clock line **201**.

Branch lines extend symmetrically with the main clock line every time when the branch class progresses.

[0176] As a result of adopting such a branch structure, trees which are constituted by oblique lines and symmetrical with the center C of the semiconductor chip are set up all over the chip. Although illustrations are not made, basic orthogonal lines directly connected to the cell are formed in a level under the clock trees using the oblique lines alone, and end portions of the oblique lines constituting the clock trees are connected to the basic orthogonal lines as the lower level through the via hole based on the automatic design method of the foregoing terminal layout.

[0177] In the clock tree using the oblique line, lines of the same branch class belong to the same level as a rule. Accordingly, all of the four oblique lines **204***a* to **204***d* of the fourth branch class belong to the same level. Lines which are in different branch classes but extend in the same direction may belong to the same level or may belong to different levels. In the example of **FIG. 31**, the oblique lines **203***a* and **203***b* of the third branch class and oblique lines **205***a* to **205***h* of a fifth branch class extending in the same direction as the oblique lines **203***a* and **203***b* can be formed in the same level or in different levels.

[0178] The greatest effect achieved by using such oblique lines is that a calculation to keep balance in designing load capacitance and the like is facilitated. In addition, it is possible to hold down variations of clock delay accompanied with process change. Moreover, levels of the same branch class are disposed in the same level, and the lines are made to be symmetrical. Thus, variations depending on the line level are eliminated, and delay of clocks between two points can be shortened while keeping balance for load capacitance for each branch.

[0179] Although illustrations are not made, it is possible to narrow a line width based on a line delay calculation formula of Elmor as the branch class progresses.

[0180] With such a constitution, it is possible to realize a semiconductor integrated circuit with high performance which suppresses the load capacitance, operates at a higher speed, and shows fewer variations.

Example of Second Semiconductor Integrated Circuit

[0181] As shown in **FIG. 32, a** second semiconductor integrated circuit **300** comprises: a main PLL **310** positioned in an end of the circuit, which supplies global clocks of comparatively low frequency (several hundreds MHz); a global clock line **312** extending from the main PLL **310**; and a plurality of random blocks **330**A and **330**B. Each random block **330** comprises: a clock driver cell (Delay-Locked Loop (DLL) in the eighth embodiment) **320** connected to the global clock line **312**; and clock tress constituted of oblique lines.

[0182] The main PPL **310** regulates phases of clocks with integrated circuit devices other than a semiconductor integrated circuit loading the PPL **310**. The global clocks that are basic clocks traversing the chip are supplied from the PPL **310** to a circuit block or a random block in the chip. The circuit block and the random block are an aggregate of partial circuits divisionally prepared by the designer, which are composed of a plurality of logic circuit modules. The DLL **320** provided in each random block converts the global clocks of the comparatively low frequency to local clocks of a high frequency (several GHz), and supplies the high frequency clocks to the inside of the random block through a related clock tree.

[0183] Although illustrations are not made, also in the second semiconductor integrated circuit, the clock tree of each block **330** is connected to the basic orthogonal line in the lower level through the via hole. Specifically, terminal ends of the oblique lines constituting the clock tree are surely connected to terminal ends of the basic orthogonal lines based on a line layout generated by the foregoing automatic design method.

[0184] As described above, as a LSI is fabricated to be more minute, resistivity and capacity of the line greatly affect a delay. In the collective synchronizing design of the chip, that is, the single clock design, to collectively synchronize the chip of 10 mm square, a speed of several hundred MHz is a limit. If a design more than several hundred MHz is desired, a thickness of the clock line must be set to several ten to several hundred times that of a standard signal line. This results in difficulty of manufacturing the semiconductor integrated circuit in terms of processes, and in difficulty of handling on CAD.

[0185] Accordingly, by transmitting the global clocks with the comparatively low frequency and by synchronizing each local block **330** with a high frequency to be operated like the second semiconductor integrated circuit, a higher speed operation can be realized with the chip size. In addition, since the clock tree is constituted of only the symmetrical oblique lines, there is less delay.

[0186] Since each random block **330** is disposed on both sides of the global clock line **312** in the constitution of **FIG. 32**, the DLL of each random block **330** can be disposed at the end portion of the circuit, and hence a voltage supply is easy.

[0187] As shown in **FIG. 33**, in a semiconductor integrated circuit **400**, a PLL **410** is disposed at a corner of the circuit, and a global clock line **412** for supplying global clocks lies obliquely. Usually, the global clock line **412** for supplying the global clocks is apt to cause a delay. To remove the delay at this portion and to supply the global clocks to each random block **430** quickly and approximately simultaneously, the global clock line **412** is made to lie obliquely up to the center of the chip, and DLLs **420** of the respective random blocks are disposed collectively at the center portion. Power is supplied to the DLLs **420** from a dedicated area pad (not shown) which is provided on the upper surface of the chip.

[0188] By providing the global clock line **412** obliquely, a frequency itself of the global clocks can be raised, and a higher speed operation is possible.

Example of Third Semiconductor Integrated Circuit

[0189] As shown in **FIG. 34, a** third semiconductor integrated circuit **500** comprises a PLL **510** disposed at a corner of a chip, and a clock mesh **520** which is constituted by use of oblique lines and set up approximately all over the chip.

[0190] Generally, a clock supply source of a mesh structure is resistant to process variations, and capable of reduc-

ing variations owing to a delay on the whole. In the structure shown in **FIG. 27**, since the clock mesh using the oblique lines is adopted, a delay shortening effect of the clock can be more achieved compared to a mesh using the horizontal and vertical basic orthogonal lines.

[**0191**] Although illustrations are not made, in a lower level of the clock mesh constituted by the oblique lines, a basic orthogonal line level connected directly to the cell is provided. The oblique lines constituting the clock mesh and the basic orthogonal lines provided in the lower level are connected through a via hole based on a terminal layout generated by the foregoing automatic design method.

Example of Fourth Semiconductor Integrated Circuit

[**0192**] As shown in **FIG. 35, a** fourth semiconductor integrated circuit **600** comprises: a main PLL **610** disposed at an end portion of the circuit, which supplies global clocks of a comparatively low frequency (several hundred MHz); a global clock line **612** extending from the main PLL **610**; and a plurality of random blocks **630**A and **630**B. Each random block **630** comprises a clock driver cell (the DLL in the fourth semiconductor integrated circuit) **620** connected to the global clock line **612**; and a clock mesh **640** constituted by oblique lines. Each DLL **620** converts the global clocks of a comparatively low frequency to local clocks of a high frequency (several GHz), and supplies high frequency clocks in the random block through the related clock mesh **640**.

[**0193**] Although illustrations are not made, in each random block **630**, a basic orthogonal lines connected to the cell are provided in a lower level of the clock mesh **640**, the basic orthogonal lines are connected to the upper level through a via hole at a predetermined position based on a terminal layout generated by the foregoing automatic design method.

[**0194**] Each block **630** allows the global clocks sent from the DDL **620** to be synchronized at a high frequency, and supplies a signal to each site through the clock mesh of the-oblique lines which hardly show delay variations. Accordingly, a high speed operation of the device can be achieved.

[**0195**] The global clock supply line **612** which lies vertically in **FIG. 35** may be allowed to lie obliquely so as to cross the chip as shown in **FIG. 33**. In this case, the frequency itself of the global clock can be raised, and a higher speed operation is possible.

Example of Fifth Semiconductor Integrated Circuit

[**0196**] As shown in **FIG. 36, a** fifth semiconductor integrated circuit **700** has: a route driver **710** disposed at a corner of a chip, which shows a comparatively large driving force; a main clock supply line **712** extending obliquely from the route driver **710** so as to cross the chip; a clock mesh **730** which is set up all over the chip; and a plurality of sub-drivers **720** connected to the main clock supply line **712**, which drive oblique lines constituting the clock mesh.

[**0197**] According to the above-described structure, since the oblique lines are driven by the plurality of sub-drivers, it is possible to achieve less delay, and to make a skew of the clock signal small, which is the most serious problem in logic LSI. In addition, there are fewer variations in manufacturing the semiconductor integrated circuit.

Example of Sixth Semiconductor Integrated Circuit

[**0198**] As shown in **FIG. 37, a** sixth semiconductor integrated circuit **800** has: a route driver **810** disposed at an end portion of a chip, which shows a comparatively large driving force; a main clock supply line **812** extending from the route driver **810** along a periphery of the chip; a clock mesh **830** which is set up all over the chip; and a plurality of sub-drivers **820** connected to the main clock supply line **812**, which drive oblique lines constituting the clock mesh.

[**0199**] A feature of the sixth semiconductor integrated circuit **800** is that the sub-drivers **820** are disposed at the periphery of the chip. In the example of **FIG. 36**, the sub-drivers **620** that may be a noise source are disposed at the center of the chip. In the sixth semiconductor integrated circuit **800**, since the noise source is disposed at the periphery of the chip, an effect that a voltage drop hardly occurs is exhibited. When the voltage drop occurs, a difference in performance between the center portion of the chip and the periphery of the chip occurs. The constitution of **FIG. 37** is excellent in that uniform performance can be achieved.

OTHER EMBODIMENTS

[**0200**] The wire terminating process pattern of the layout design method used in the layout design system of the present invention was described with reference to the examples of the first to ninth embodiments. However, the ones other than the wire terminating process pattern described herein may be adopted. The layout design system of the present invention can select the most suitable wire terminating process pattern from all of the wire terminating process patterns.

[**0201**] In the first to ninth embodiments, though the horizontal line is described as the lower level line and the oblique line is described as the upper level line, the effects of the present invention are unchangeable when these lines are generated inversely thereto. In addition, the principle is the same when the horizontal line is the vertical line. Furthermore, the number of the levels is not limited to two of the horizontal line level and the oblique line level, but the present invention is suitable for an automatic design for three or more levels.

[**0202**] The line structure using various design data described in the first to ninth embodiments can be applied to line structures of various semiconductor integrated circuits.

[**0203**] Moreover, the arrangements of the random blocks in the semiconductor integrated circuit and the positions of the DLLs therein can be set at optional positions as long as the positions are the ones that can be subjected to frequency conversion.

[**0204**] Various modifications will become possible for those skilled in the art after receiving the teachings of the present disclosure without departing from the scope thereof.

What is claimed is:

1. A layout design system of a semiconductor integrated circuit, comprising:

a library information storage unit configured to register a basic via shape list;

a technology database storage unit configured to register a list expressing an optimum wire terminating process for each via shape of said basic via shape list registered in said library information storage unit; and

a central processing control unit configured to refer to the lists respectively registered in said library information storage unit and said technology database storage unit, select an optimum line processing, and execute a line design.

2. The layout design system of claim 1, wherein said central processing control unit configured to be constituted by a plurality of processing control sub-units.

3. The layout design system of claim 1, wherein said central processing control unit includes:

a layout design module configured to prepare a list expressing said optimum line processing by referring to the list registered in said library information storage unit, register the list in said technology database storage unit, and execute a layout processing;

a line processing module configured to refer to the list registered in the technology database storage unit and perform the line processing; and

an optimum via selection module configured to select an optimum via during processing by said line processing module.

4. A computer implemented layout design method, comprising:

preparing a basic via shape list and registering the basic via shape list in a library information storage unit;

referring to said basic via shape list registered in said library information storage unit, preparing a list expressing an optimum wire terminating process for each via shape of said basic via shape list, and registering the list in a technology database storage unit;

referring to the list registered in said technology database storage unit, and selecting an optimum line processing to perform the selected line processing; and

selecting an optimum via.

5. The computer implemented layout design method of claim 4, wherein said selecting said via, includes:

selecting a via applicable to all of said wire terminating processs; and

selecting a via most suitable for each of said wire terminating processs when the via applicable to all of said wire terminating processs can not be selected in said selecting said via.

6. A line design program for allowing a computer to execute, comprising:

preparing a basic via shape list, and registering the basic via shape list in a library information storage unit;

referring to said basic via shape list registered in said library information storage unit, preparing a list expressing an optimum wire terminating process for each via shape of said basic via shape list, and registering the list in a technology database storage unit;

referring to the list registered in said technology database storage unit, and selecting an optimum line processing to perform the selected line processing; and

selecting an optimum via.

7. The line design program of claim 6, wherein the procedure for selecting said via, includes:

selecting a via applicable to all of said wire terminating processs; and

selecting a via most suitable for each of said wire terminating processs when the via applicable to all of said wire terminating processs can not be selected in said selecting said via.

8. A computer implemented layout design method, comprising:

generating a first line having a first line width and extending in a predetermined direction;

generating a second line having a second line width, extending in a direction different from said first line, and having its terminal end overlapping a terminal end of said first line;

stretching said first line in a longitudinal direction thereof;

stretching said second line in a longitudinal direction thereof by a length ½ times as long as the second line width;

deleting a projection from the terminal end of said first line and the terminal end of said second line, the projection protruding from an overlapped area where the terminal end of said first line and the terminal end of said second line overlap; and

setting a connection pattern having a polygon connecting said first and second lines at an intersection point of a longitudinal center line of said first line and a longitudinal center line of said second line.

9. The layout design method of claim 8, wherein said first and second lines are lines generated in different levels.

10. The layout design method of claim 8, wherein said first and second lines are lines generated in the same level.

11. The layout design method of claim 8, wherein said polygon is octagonal.

12. The layout design method of claim 11, wherein said first and second lines are lines generated in different levels.

13. The layout design method of claim 11, wherein said first and second lines are lines generated in the same level.

14. The layout design method of claim 8, wherein in said stretching said first line in the longitudinal direction thereof, said first line is stretched by a length ½ times as long as the line width of said second line.

15. The layout design method of claim 8, wherein in said stretching said second line in the longitudinal direction thereof, said second line is stretched by a length ½ times as long as the line width of said first line.

16. A manufacturing method of a semiconductor integrated circuit, comprising:

forming a first line extending in a predetermined direction on a semiconductor substrate;

forming a level interlayer insulating film on said first line;

forming a polygon via hole penetrating through said level interlayer insulating film;

forming a connection conductive portion filling said polygon via hole and connecting with said first line; and

forming a second line extending at an angle unperpendicularly relative to said first line and having a terminal end connected to said connection conductive portion.

* * * * *