US 20030116852A1

(19) United States

(12) Patent Application Publication

(10) Pub. No.: US 2003/0116852 A1

(43) Pub. Date: Jun. 26, 2003

Watanabe et al.

(54) SEMICONDUCTOR DEVICE

(75) Inventors: **Kenichi Watanabe**, Kawasaki (JP); **Noriyoshi Shimizu**, Kawasaki (JP); **Takashi Suzuki**, Kawasaki (JP)

Correspondence Address:
ARMSTRONG,WESTERMAN & HATTORI, LLP
1725 K STREET, NW
SUITE 1000
WASHINGTON, DC 20006 (US)

(73) Assignee: **Fujitsu Limited**, Kawasaki (JP)

(21) Appl. No.: **10/309,113**

(22) Filed: **Dec. 4, 2002**

(30) **Foreign Application Priority Data**

Dec. 12, 2001 (JP) 2001-390710

Publication Classification

(51) **Int. Cl.**[7] **H01L 21/50**; H01L 23/48

(52) **U.S. Cl.** **257/758**; 438/118; 438/622

(57) **ABSTRACT**

There is provided a semiconductor device which comprises a second insulating film formed on a substantially flat surface, on which a surface of a first wiring and a surface of a first insulating film are continued, to cover the first wiring, a wiring trench formed in the second insulating film, connection holes formed in the second insulating film to extend from the wiring trench to the first wiring, dummy connection holes formed in the second insulating film to extend from the wiring trench to a non-forming region of the first wiring, and a second wiring buried in the connection holes and the wiring trench to be connected electrically to the first wiring and also buried in the dummy connection holes, and formed such that a surface of the second wiring and a surface of the second insulating film constitute a substantially flat surface.

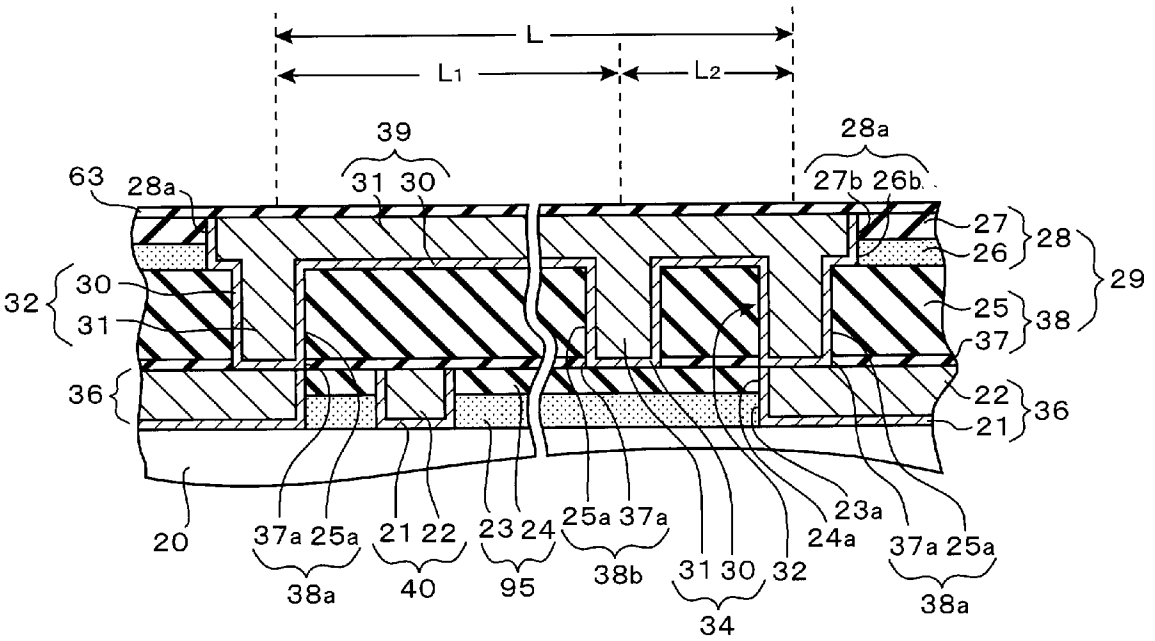

FIG. 1

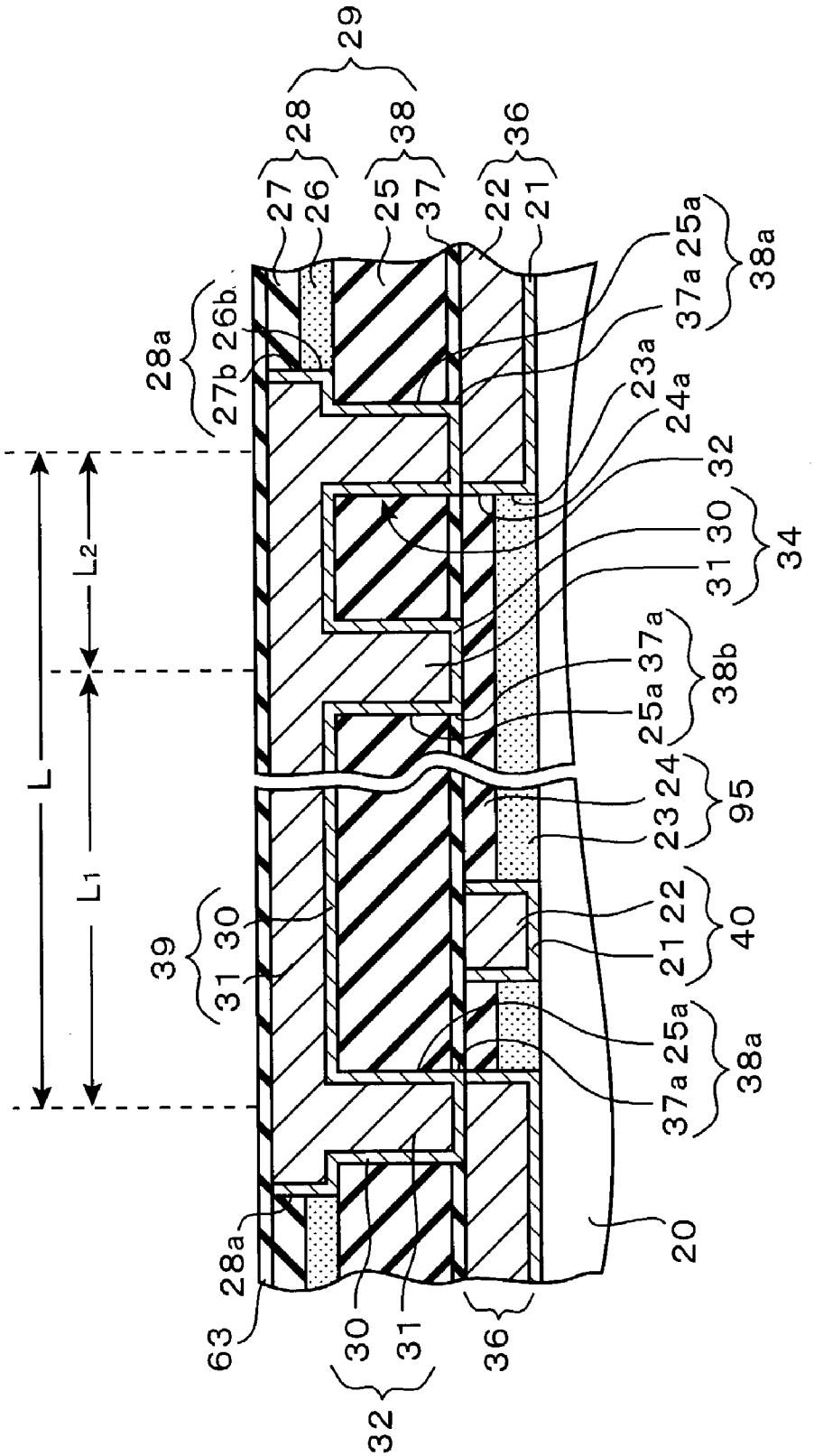
29
28
38
36
27
26
25
37
22
21
28a
27b
26b
25a
37a
38a
23a
24a
32
30
31
34
L
L2
L1
37a
25a
38b
24
23
95
22
21
40
39
30
31
25a
37a
38a
28a
63
30
31
32
36
20

FIG. 2

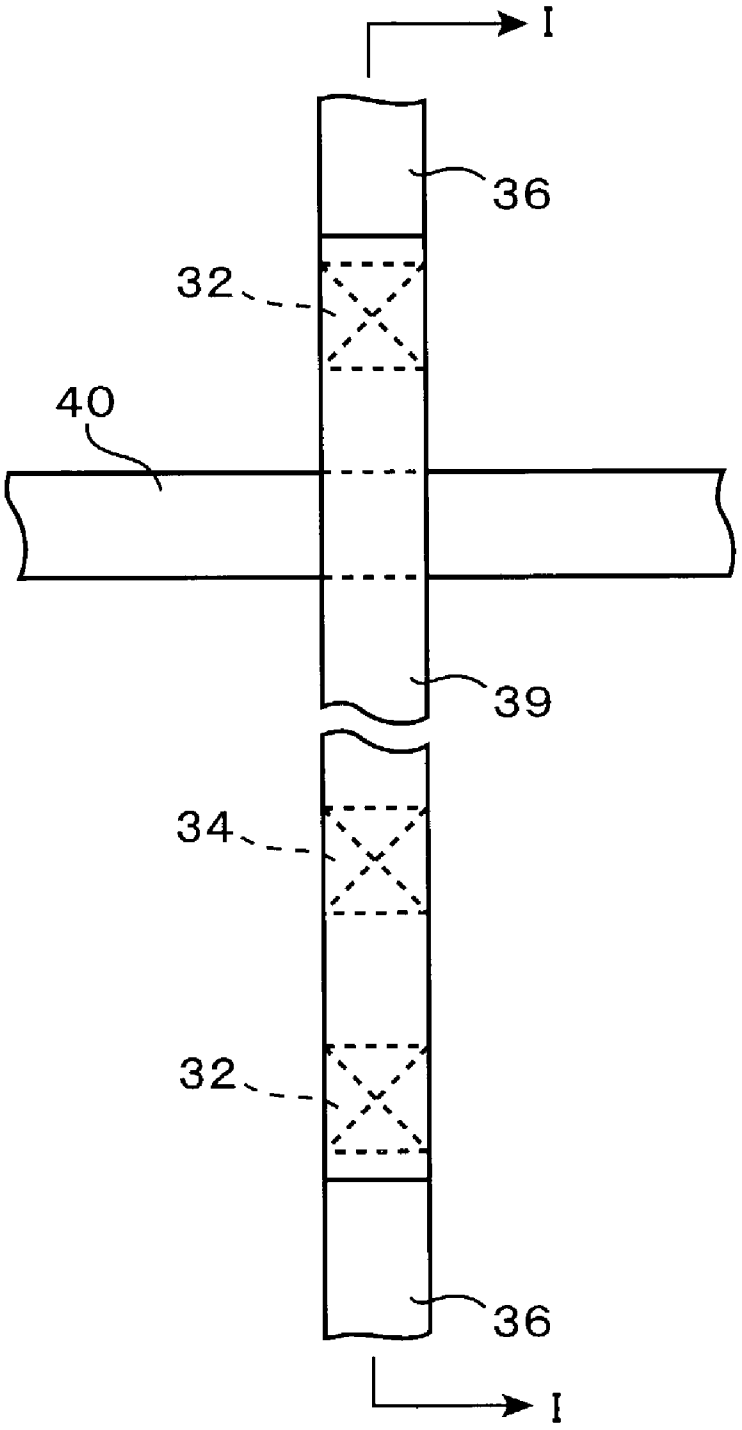

FIG. 3

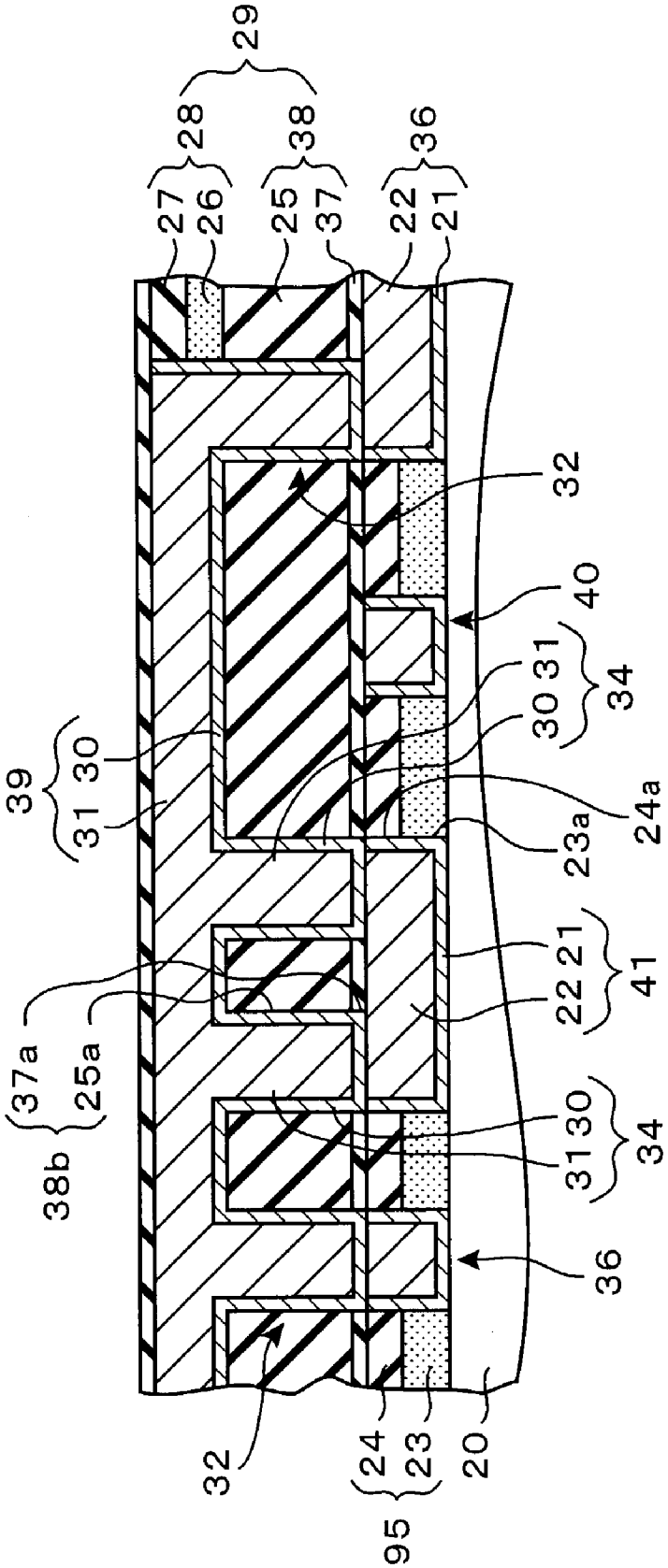
29
28
38
36
27
26
25
37
22
21
32
40
30 31
34
39
31 30
24a
23a
22 21
41
37a
25a
38b
31 30
34
36
32
24
23
20
95

FIG. 4

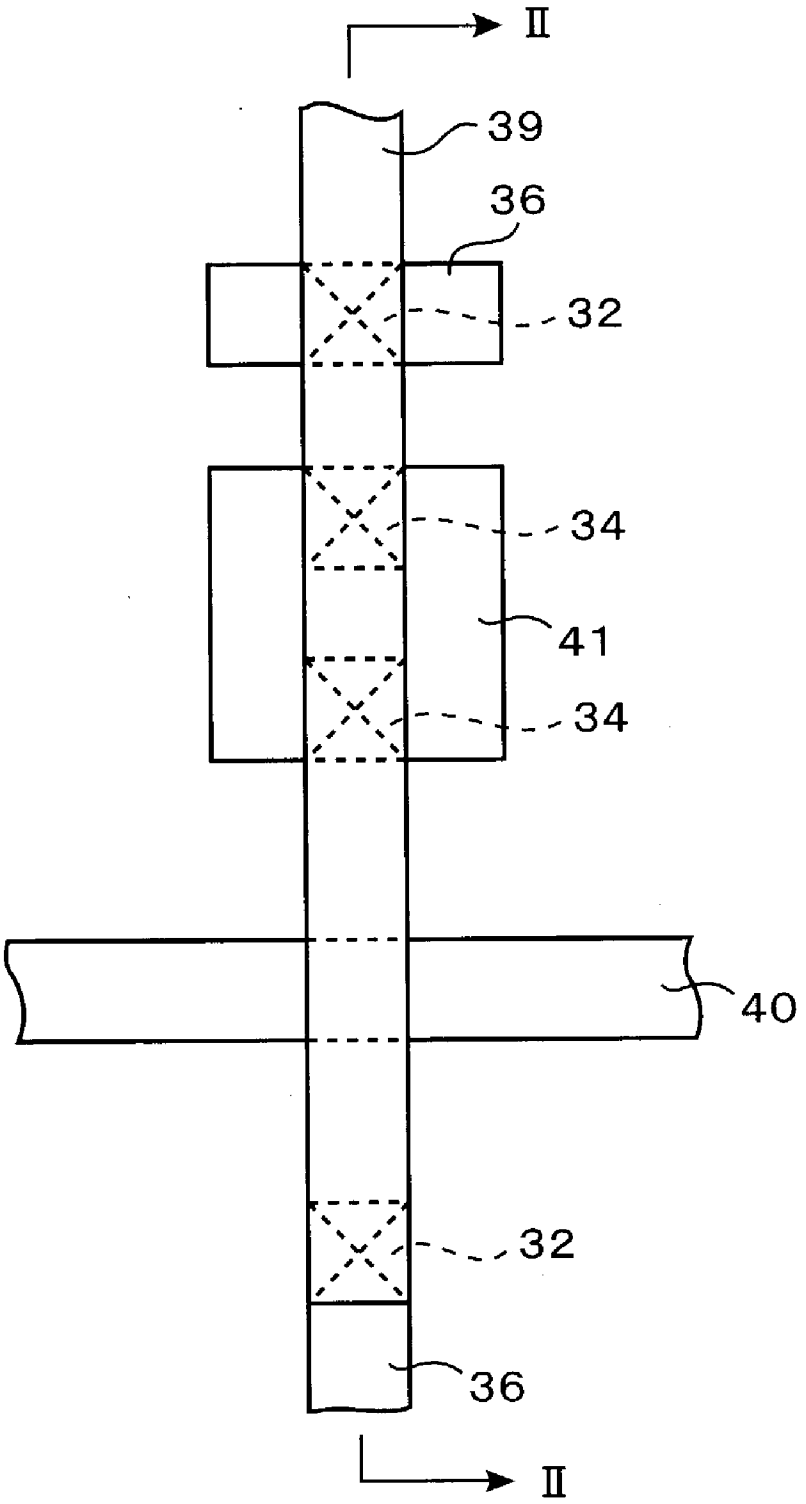

FIG. 5A

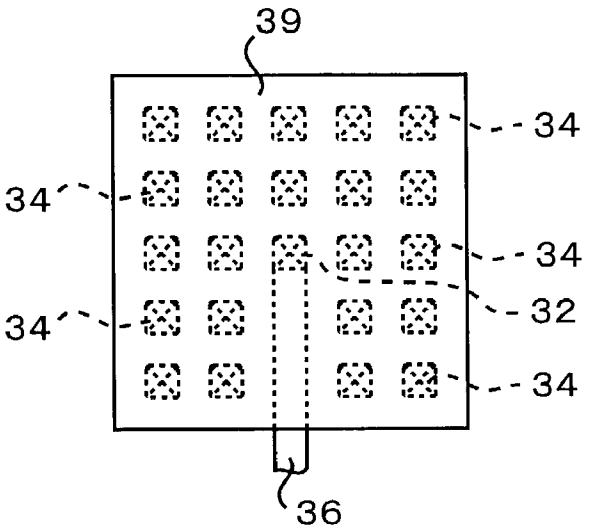

FIG. 5B

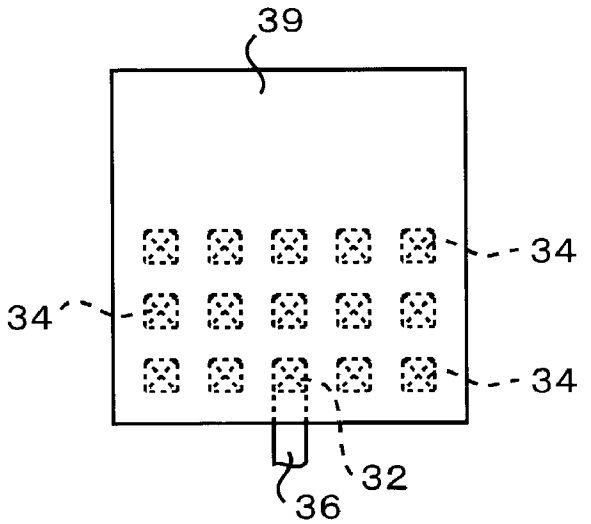

FIG. 5C

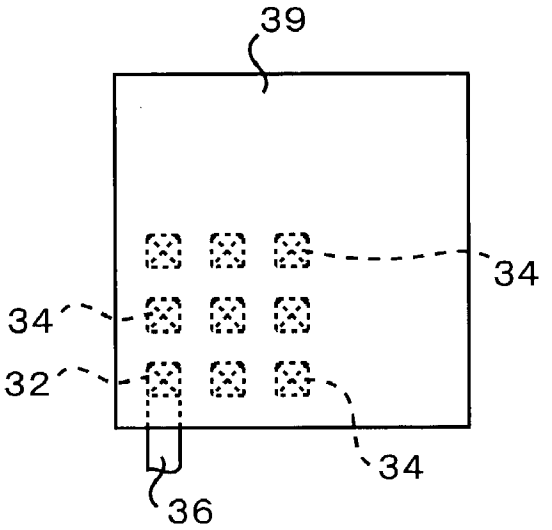

FIG. 6

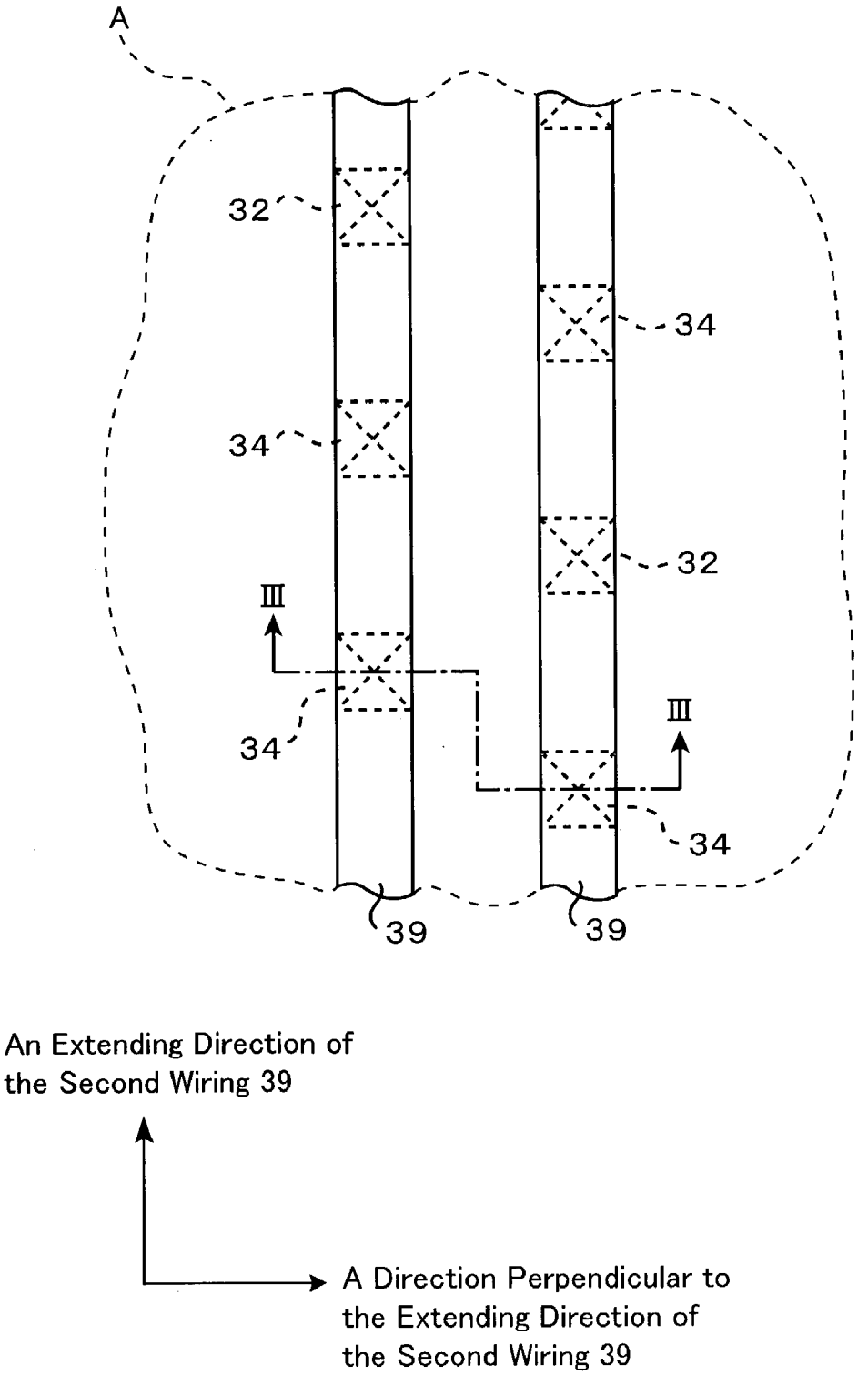
A
32
34
34
32
III
III
34
34
39
39
An Extending Direction of the Second Wiring 39
A Direction Perpendicular to the Extending Direction of the Second Wiring 39

FIG. 7

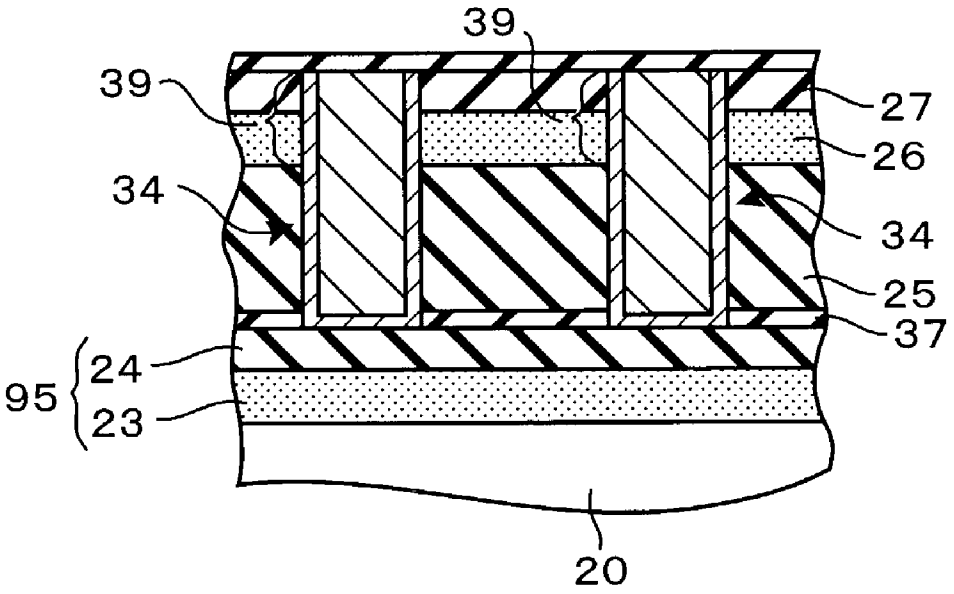

FIG. 8

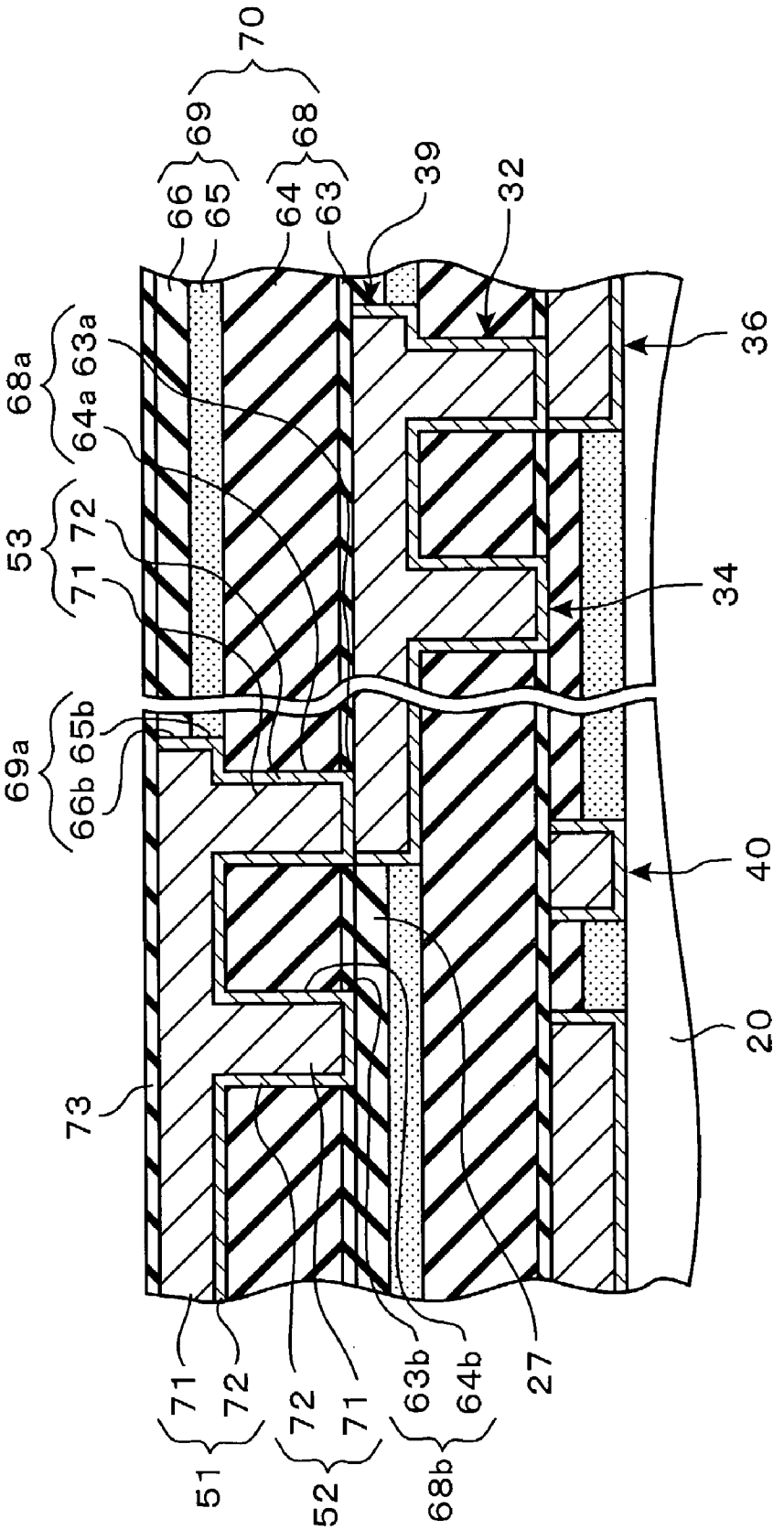
70
69
68
66
65
64
63
39
32
36
68a
63a
64a
53
72
71
34
69a
65b
66b
40
20
73
71
72
72
71
63b
64b
27
51
52
68b

FIG. 9

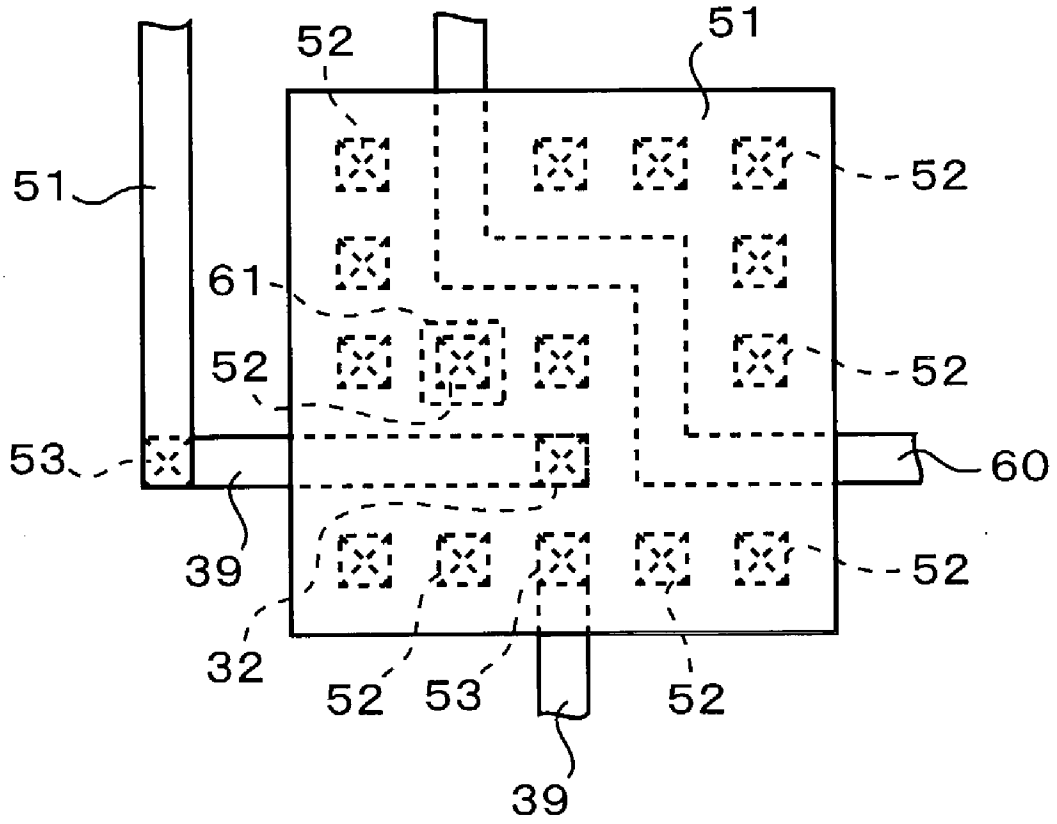

FIG. 10

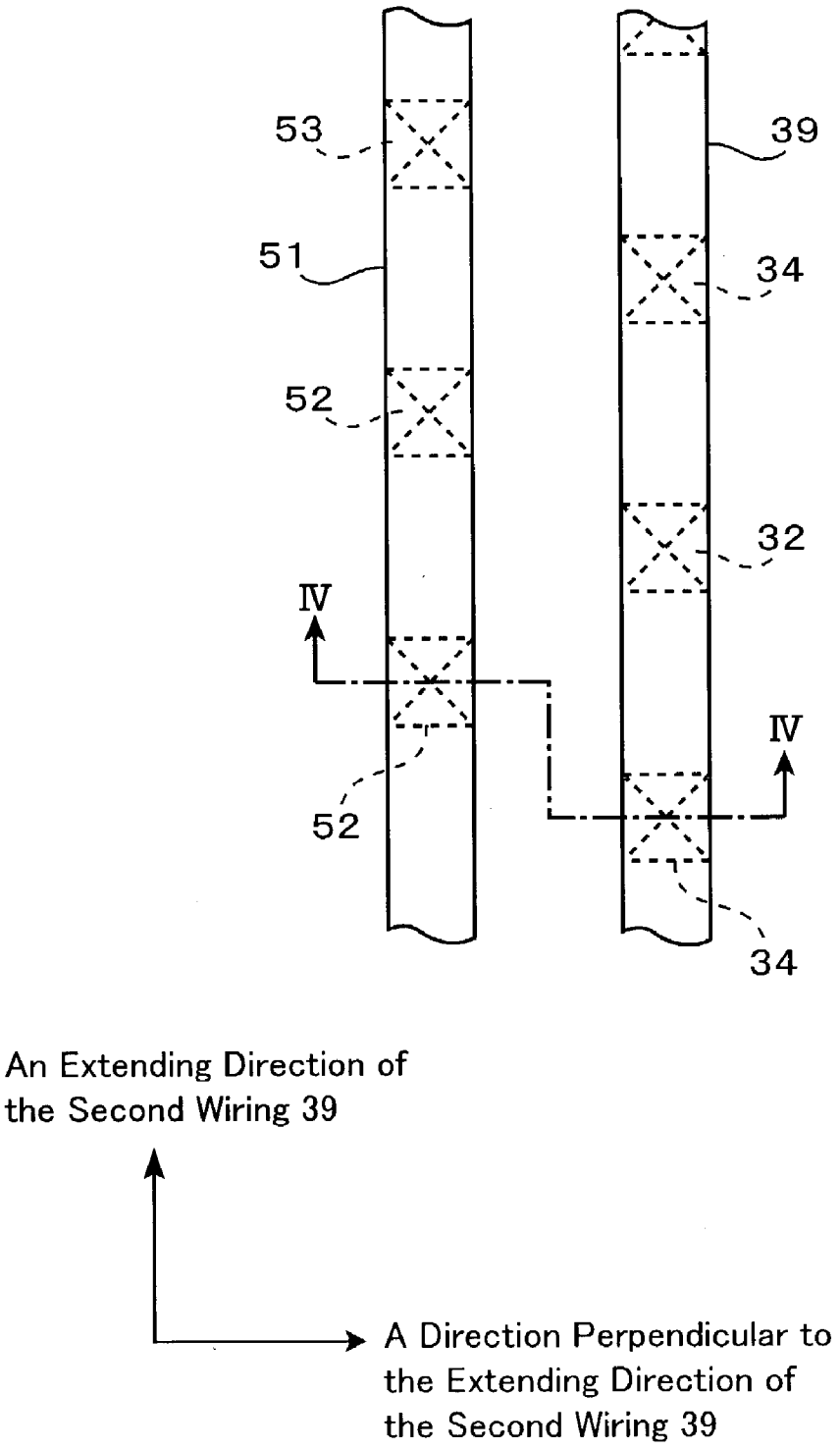
53
39
51
34
52
32
IV
IV
52
34
An Extending Direction of the Second Wiring 39
A Direction Perpendicular to the Extending Direction of the Second Wiring 39

FIG. 11

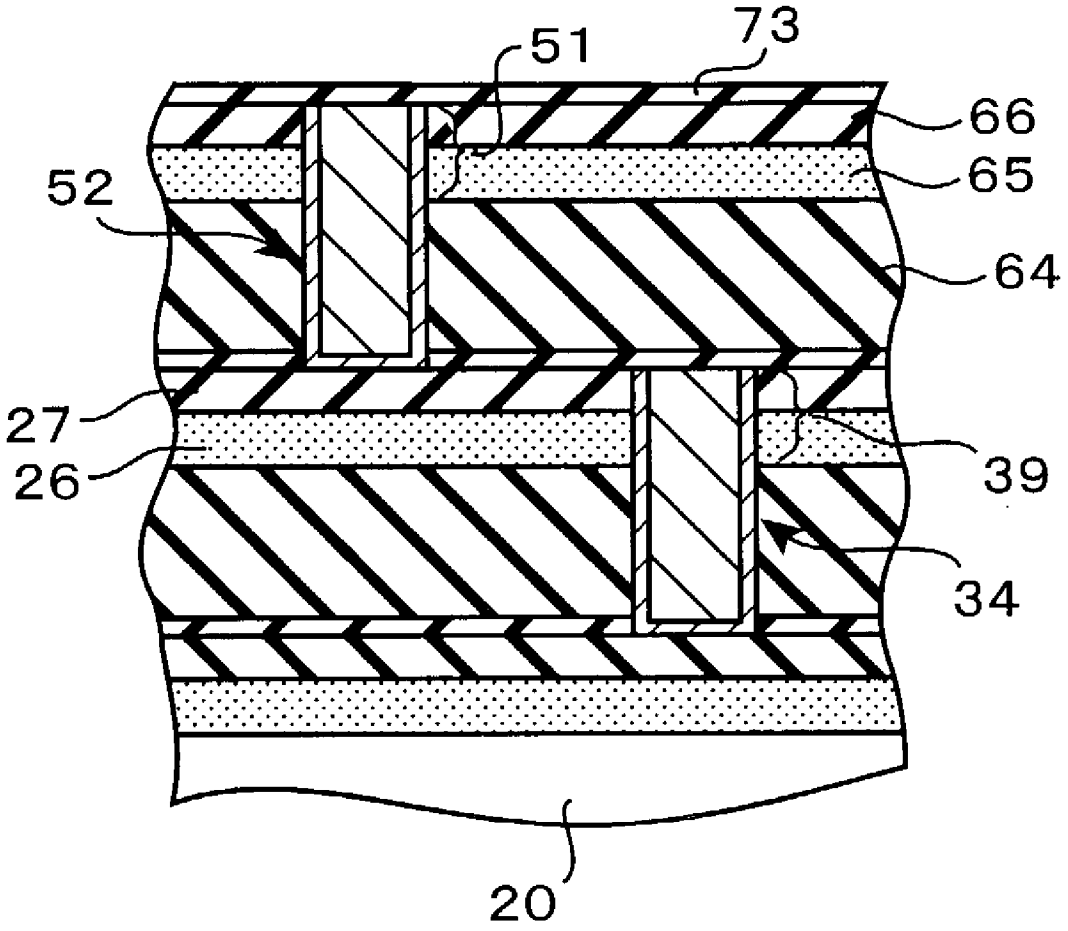

FIG. 12A

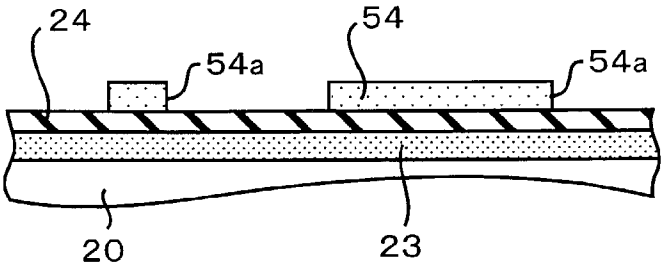

FIG. 12B

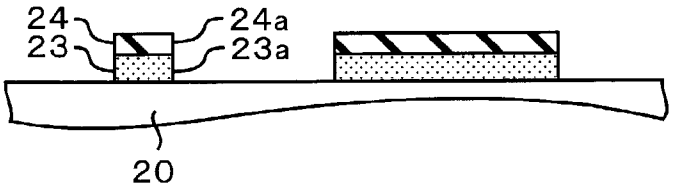

FIG. 12C

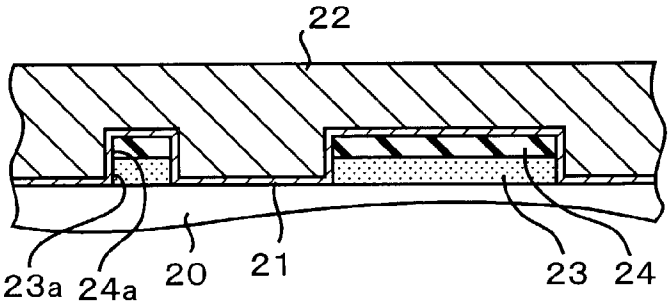

FIG. 12D

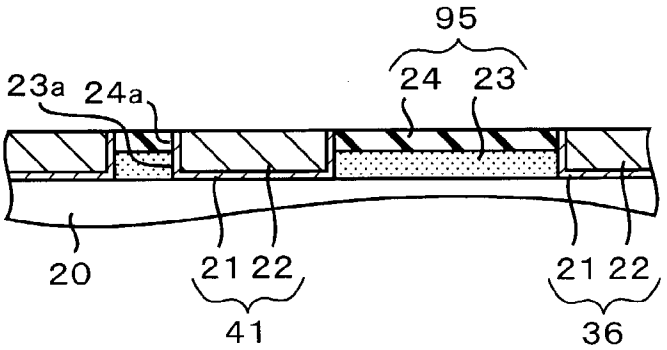

FIG. 12E

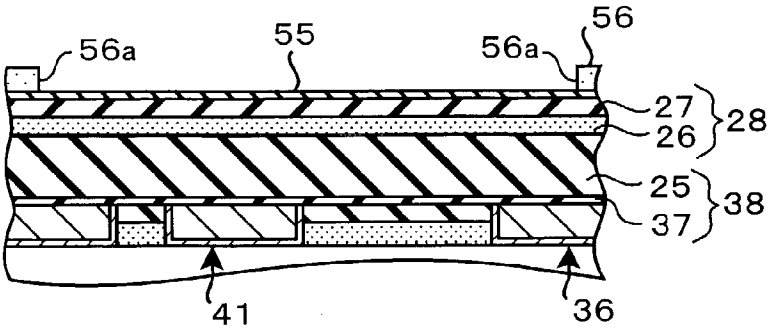

FIG. 12F

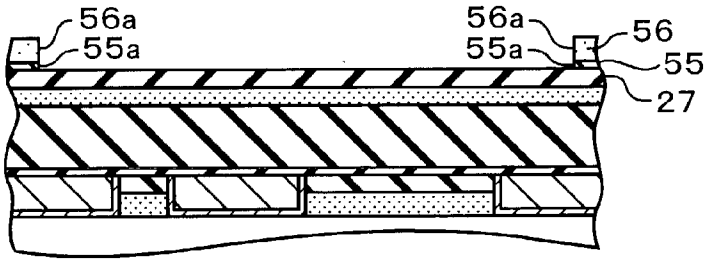

FIG. 12G

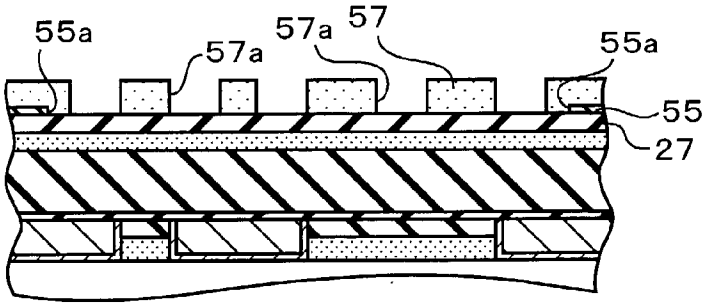

FIG. 12H

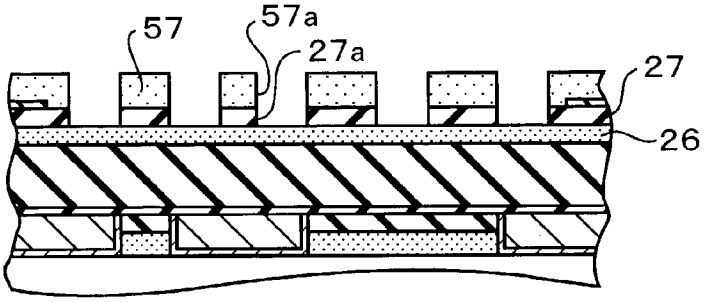

FIG. 12I

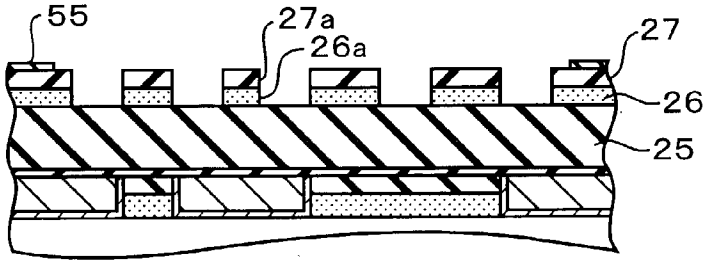

FIG. 12J

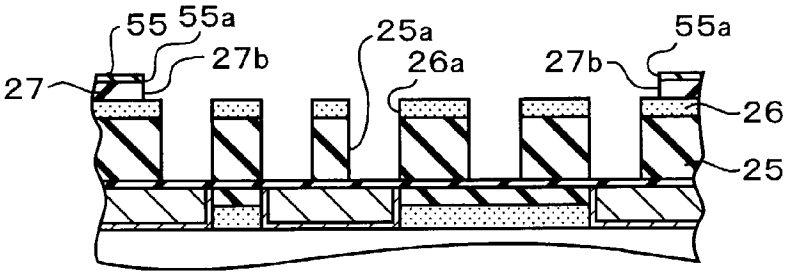

FIG. 12K

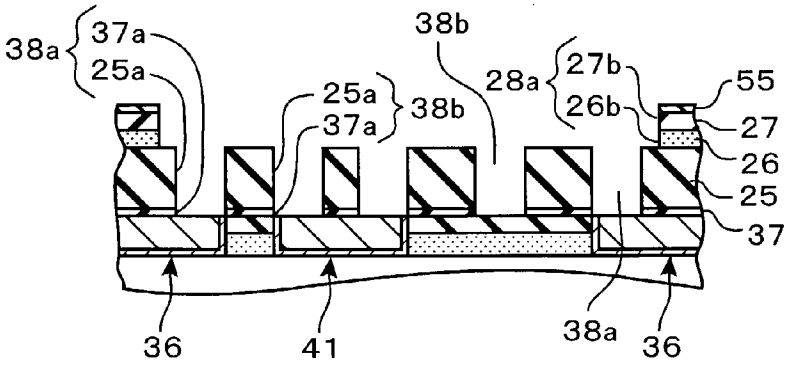

FIG. 12L

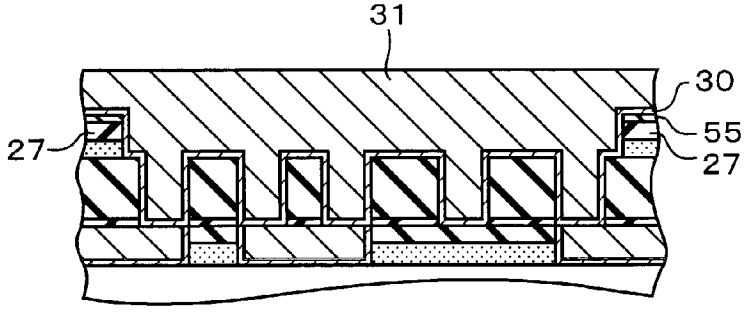

FIG. 12M

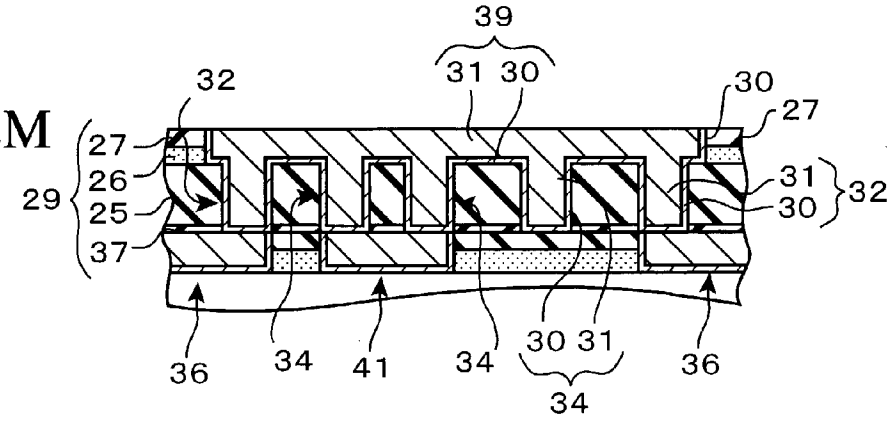

FIG. 12N

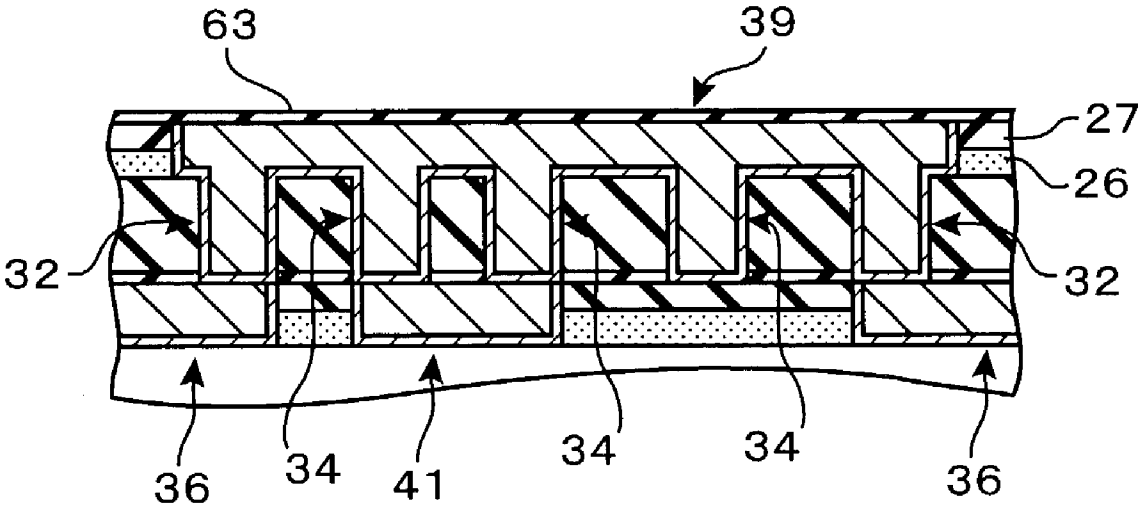

FIG. 13

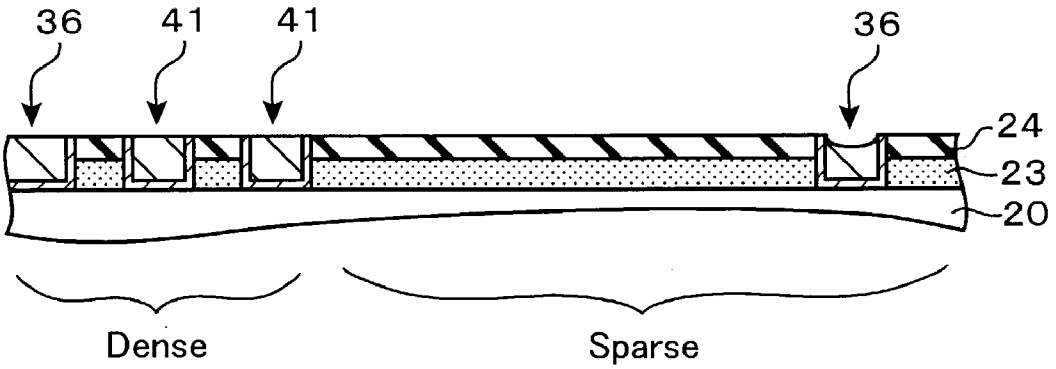

FIG. 14

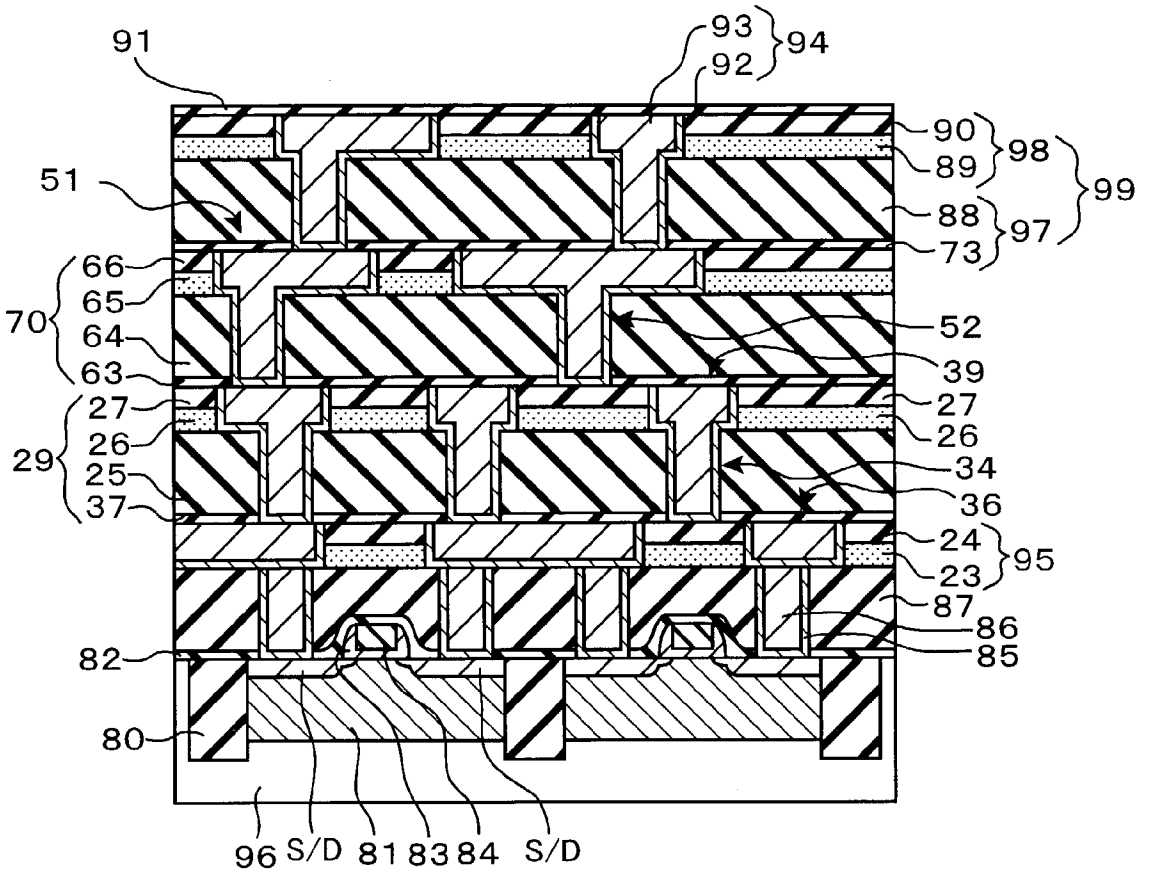
91
93
92
94
90
89
98
99
88
73
97
51
66
65
70
64
63
52
39
27
26
29
25
37
27
26
34
36
24
23
95
87
86
85
82
80
96
S/D
81
83
84
S/D

FIG. 15A

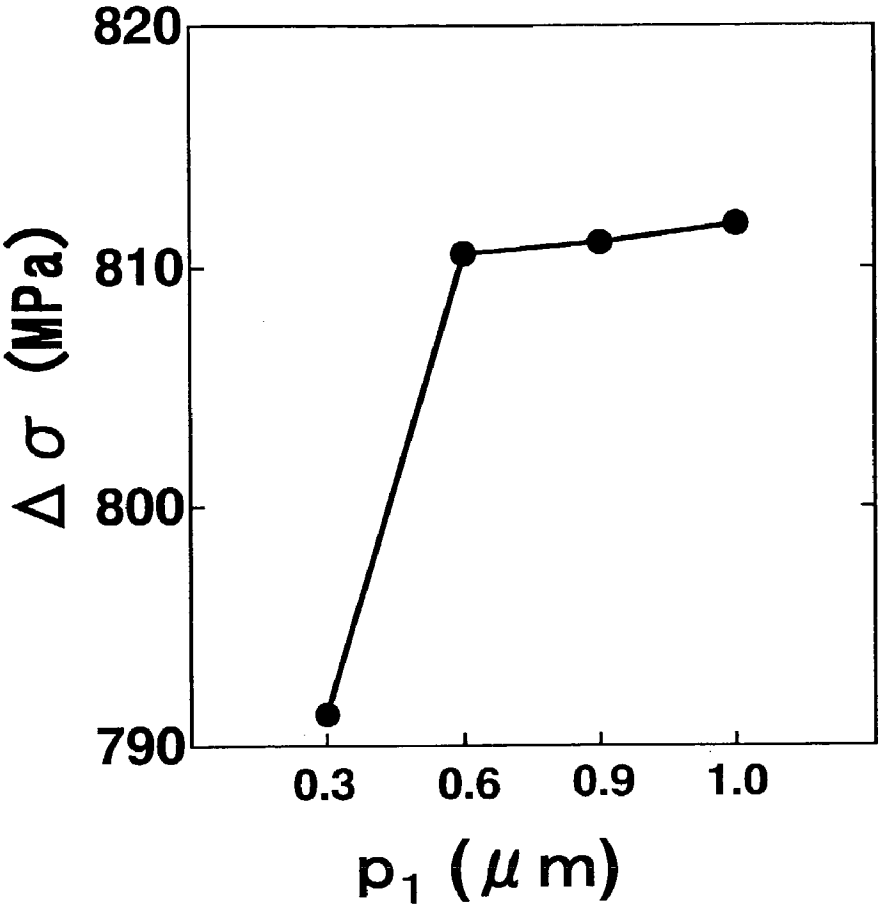

FIG. 15B

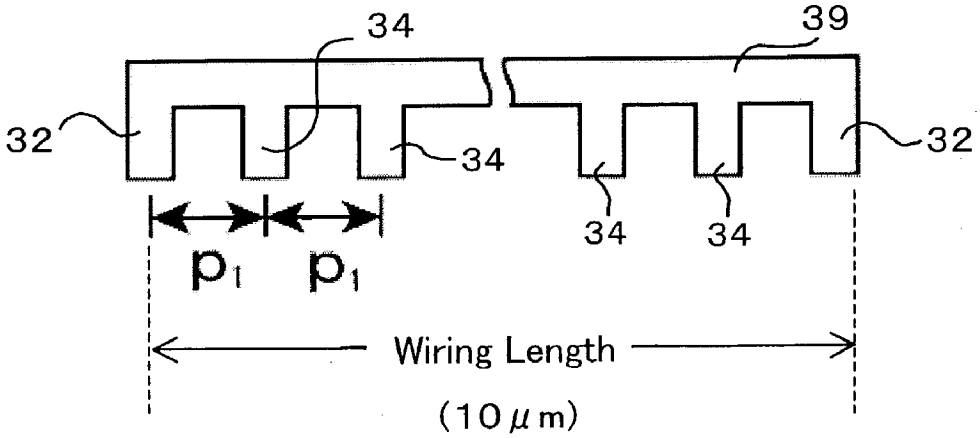

FIG. 16A

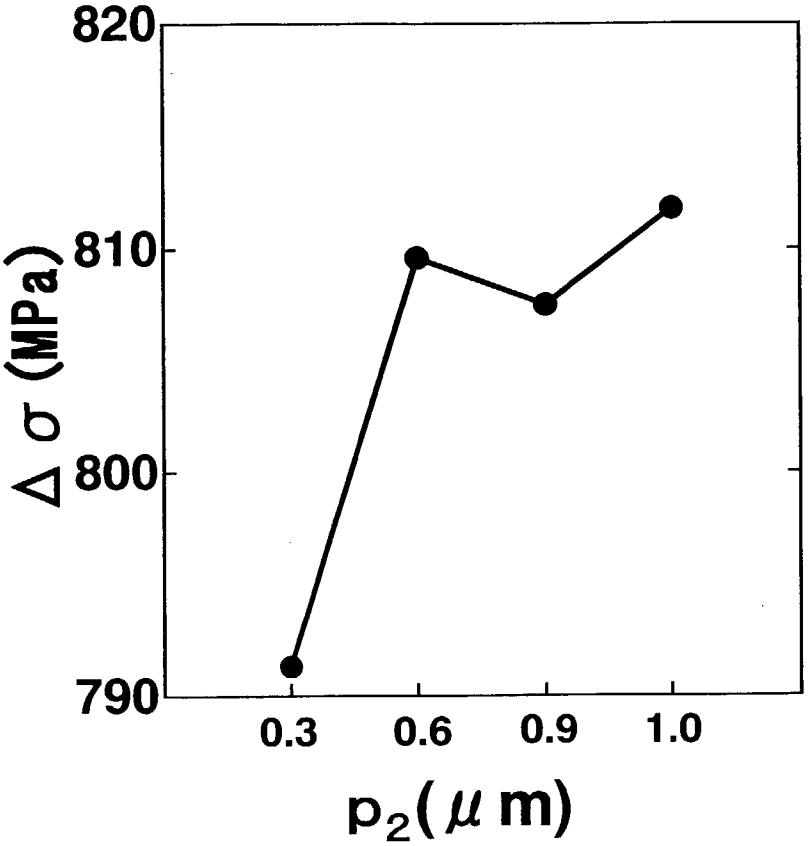

FIG. 16B

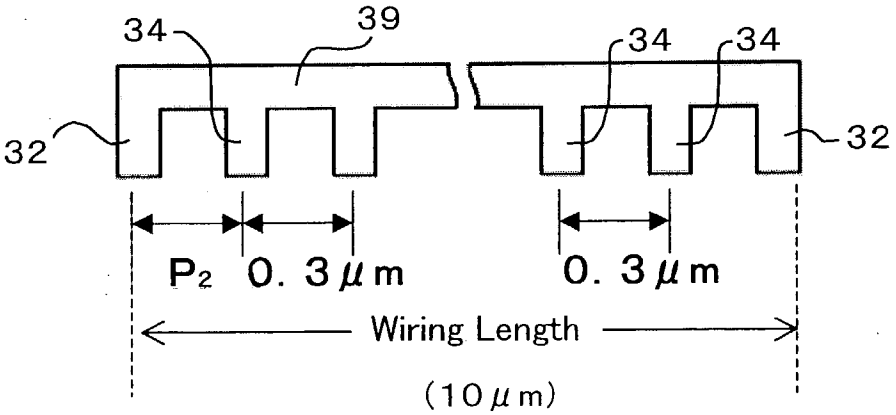

FIG. 17A

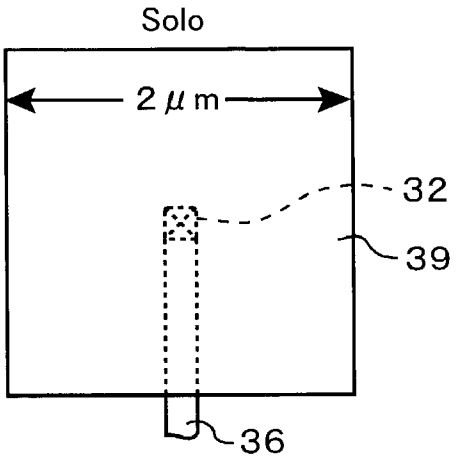

FIG. 17B

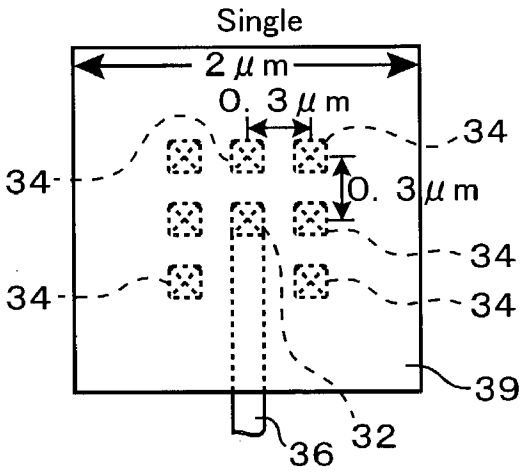

FIG. 17C

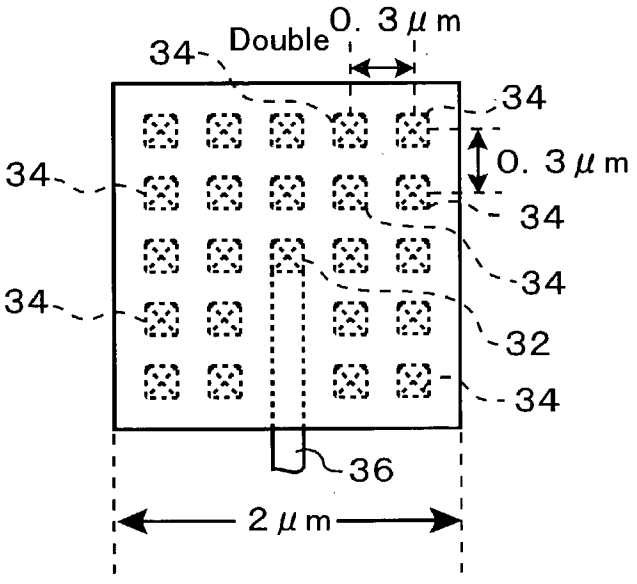

FIG. 18

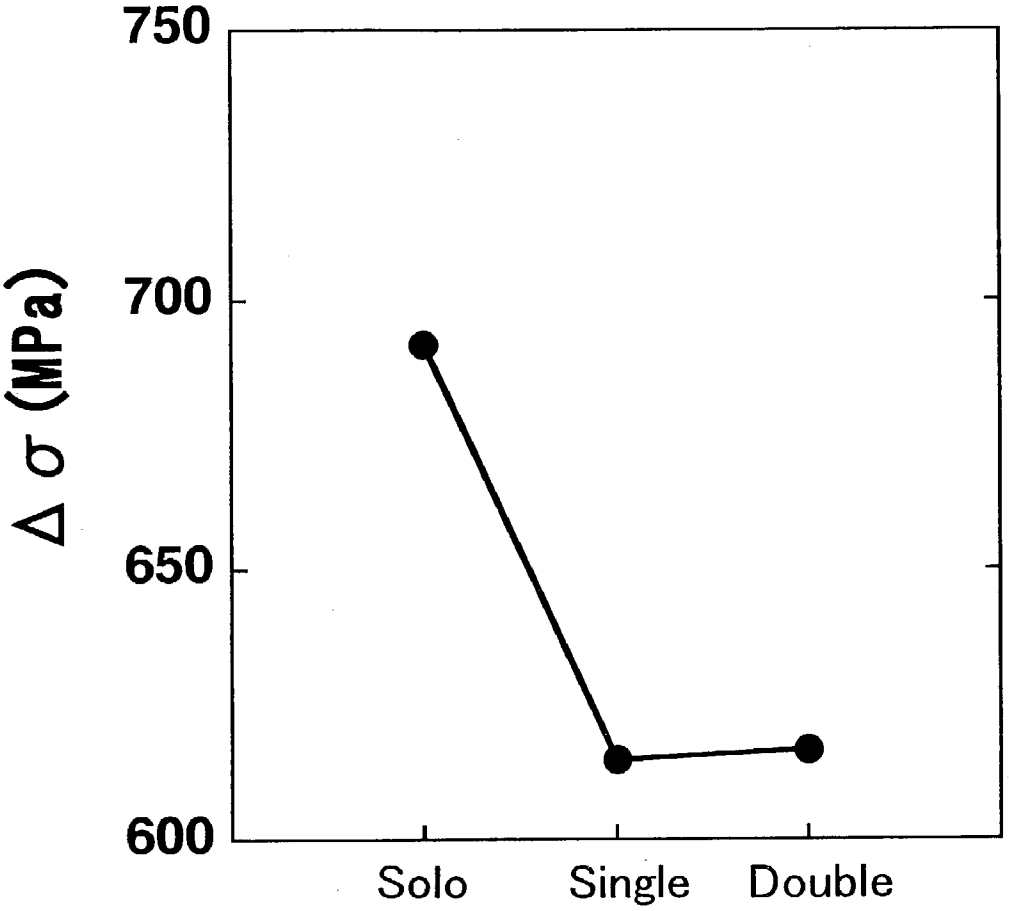

FIG. 19 (Prior Art)

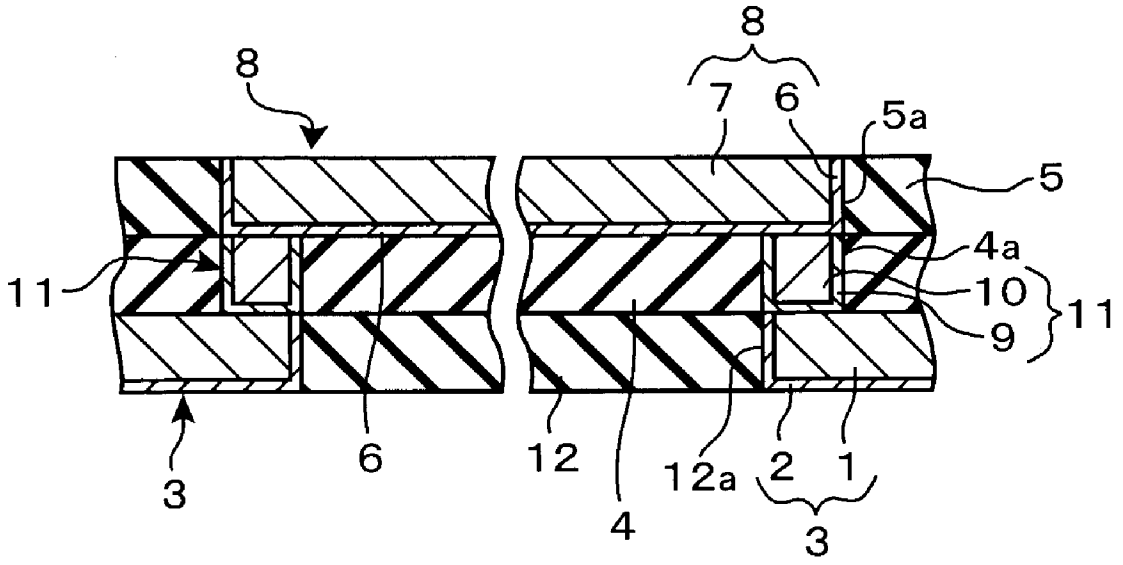

FIG. 20 (Prior Art)

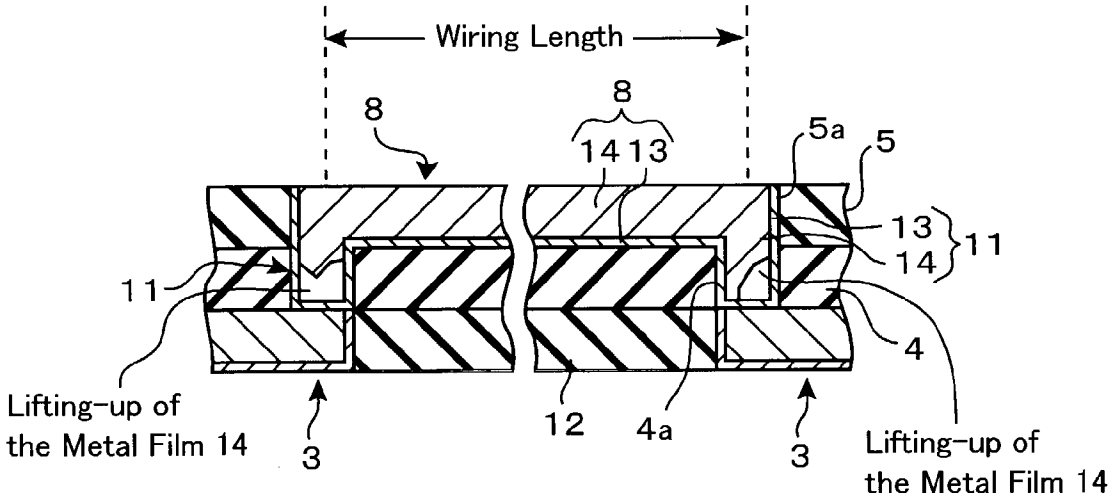

SEMICONDUCTOR DEVICE

CROSS-REFERENCE TO RELATED APPLICATIONS

[0001] This application is based upon and claims priority of Japanese Patent Application No. 2001-390710, filed Dec. 21, 2001, the entire contents of which are incorporated herein by reference.

BACKGROUND OF THE INVENTION

[0002] 1. Field of the Invention

[0003] The present invention relates to a semiconductor device and, more particularly, to a semiconductor device manufactured by the damascene process.

[0004] 2. Description of the Prior Art

[0005] In recent years, with the improvement in the integration density of the semiconductor device, the miniaturization of the wiring is required. As the method of forming the wiring, there is the method of forming the barrier metal layer on the aluminum film and then forming the aluminum wiring by patterning directly the aluminum film and the barrier metal layer. According to this method, since the etching of the aluminum film progress in the lateral direction during the patterning, not only the wiring width is unnecessarily narrowed, but also the barrier metal layer remains on the aluminum wiring like a pent roof. In this manner, this method has a difficulty in manufacturing a precise wiring and poses a limit on progress in miniaturization of the wiring.

[0006] In contrast, in the so-called damascene process, the metal film is not directly patterned as in the above. In stead, the wiring is formed by forming the trench by etching the insulating film and then burying the metal, such as the copper or the like, in this trench. Since the etching object is the insulating film, the above disadvantage does not occur in the damascene process and thus the wiring can be miniaturized as desired. In addition, since the copper wiring having a lower resistance than that of the aluminum wiring can be formed in the damascene process, the operation speed of the semiconductor device can be increased.

[0007] The damascene process is roughly classified into two category, single damascene process and the dual damascene process.

[0008] **FIG. 19** is a sectional view showing the semiconductor device manufactured by the single damascene process in the prior art. In **FIG. 19**, reference numeral **3** denotes the first wiring that consists of the barrier metal layer **2** and the metal film **1**. Such first wiring **3** is buried in the wiring trench **12***a* in the insulating film **12**.

[0009] On the other hand, reference numeral **8** denotes the second wiring that consists of the barrier metal layer **6** and the metal film **7**, and is buried in the wiring trench **5***a* in the upper insulating film **5**. This second wiring **8** and the above first wiring **3** are connected electrically via the conductive plug **11** (referred to as the "plug" hereinafter). Such plug **11** has the double-layered structure consisting of the barrier metal layer **9** and the metal film **10**, and is buried in the via hole **4***a* in the lower insulating film **4**.

[0010] In order to obtain the above structure by the single damascene process, the plug **11** is buried in the via hole **4***a* after the lower insulating film **4** is formed. Then, the upper insulating film **5** is formed on the lower insulating film **4**, and then the wiring trench **5***a* is formed in the upper insulating film **5**. Then, the second wiring **8** connected to the plug **11** is buried in the wiring trench **5***a*.

[0011] In this manner, since the plug **11** and the second wiring **8** are formed separately in the single damascene process, such a structure is formed that the metal film **10** and the metal film **7** are isolated by the barrier metal layer **6**.

[0012] On the other hand, **FIG. 20** is a sectional view showing the semiconductor device manufactured by the dual damascene process in the prior art. In **FIG. 20**, the same reference numeral as those in **FIG. 19** are affixed to the same constituent members as those in **FIG. 19**, and their explanation will be omitted hereunder.

[0013] In order to obtain this structure by the dual damascene process, the lower insulating film **4** and the upper insulating film **5** are laminated and then the wiring trench **5***a* and the via hole **4***a* are formed in these insulating films. Then, the barrier metal layer **13** is formed simultaneously on each inner walls of the wiring trench **5***a* and the via hole **4***a*. Then, the plug **11** and the second wiring **8** are simultaneously formed by forming the metal film **14** on the barrier metal layer **13**. Both the plug **11** and the second wiring **8** have the double-layered structure of the barrier metal layer **13** and the metal film **14**.

[0014] In this way, in the dual damascene process, the plug **11** and the second wiring **8** are formed simultaneously. As a result, the plug **11** and the second wiring **8** are not isolated by the barrier metal layer but are formed integrally.

[0015] As described above, both the single and dual damascene process can miniaturize the wiring and improve the integration density of the semiconductor device.

[0016] Such semiconductor device, however, is still to be improved its stress migration resistance. The stress migration is the phenomena where the metal film **14**, in some cases the barrier metal layer **13** as well, is lifted up in the via hole **4***a* due to the difference in physical constants such as the thermal expansion coefficient, etc. between the metal film **14** and the insulator (the upper insulating film **5** or the lower insulating film **4**) to cause the connection failure between the plug **11** and the first wiring **3**.

[0017] If the stress migration is ready to occur in this manner, the fraction defective increases in the thermal process in the course of the manufacture, which brings about such a disadvantage that the production cost of the semiconductor device increases.

SUMMARY OF THE INVENTION

[0018] It is an object of the present invention to provide a semiconductor device whose stress migration resistance is improved rather than the prior art.

[0019] The above subjects can be overcome by providing a semiconductor device which comprises a second insulating film formed on a substantially flat surface, on which a surface of a first wiring and a surface of a first insulating film are continued, to cover the first wiring; a wiring trench formed in the second insulating film; a connection hole formed in the second insulating film to extend from the wiring trench to the first wiring; a dummy connection hole

formed in the second insulating film to extend from the wiring trench to a non-forming region of the first wiring; and a second wiring buried in the connection hole and the wiring trench to be connected electrically to the first wiring and also buried in the dummy connection hole, and formed such that a surface of the second wiring and a surface of the second insulating film constitute a substantially flat surface.

[**0020**] It is known that as the wiring length becomes longer, the stress migration is more likely to be occurred in the aluminum wiring that is formed, not by the damascene process, by patterning directly the aluminum film. In the present specification, the wiring length is defined as the distance between the centers of two neighboring plugs on the same wiring (see **FIG. 20**).

[**0021**] In contrast, it is not known in the damascene process that the stress migration exhibits such dependency on the wiring length in this manner.

[**0022**] However, the inventors of the present application found the fact that the second wiring **8** formed by the damascene process also shows the above dependency on the wiring length and also the stress migration is ready to occur as the wiring length becomes longer. In particular, the inventors of the present application found that the stress migration is easily caused in the wiring formed by the dual damascene process compared to that formed by the single damascene process.

[**0023**] This is because, as shown in **FIG. 20**, the plug **11** and the second wiring **8** are formed integrally in the dual damascene process and thus the metal film **14** of the plug **11** can be easily moved to the second wiring **8** by the thermal stress. Such circumstance is hard to occur in the single damascene process in which the plug **11** and the second wiring **8** are isolated by the barrier metal layer **6** (see **FIG. 19**).

[**0024**] According to the present invention, portion of the second wiring, which is buried in the connection hole in the second insulating film, serve as the conductive plugs. Also, portions of the second wiring, which is buried in the dummy connection hole in the second insulating film, serve as the dummy conductive plugs.

[**0025**] A positional relationship between these plugs (including the conductive plugs and the dummy conductive plugs) is argued in the following. It should be noted that this argument is still valid even if the above positional relationship is replaced with that between the connection holes (including the connection holes and the dummy connection holes).

[**0026**] According to the present invention, by providing the dummy conductive plug, the wiring length of the second wiring, which is originally defined as a distance between the neighboring conductive plugs, can be seen to be shortened to the distance between the dummy conductive plugs and the conductive plugs. Therefore, the stress-migration, which occurs frequently when the wiring length is long, can be reduced.

[**0027**] Also, according to the simulation results, it became apparent that providing dummy conductive plug around the conductive plug reduced the stress-migration, even if in the situation where the wiring length of the second wiring could not be defined as in the case where only one conductive plug was provided on the solid second wiring.

[**0028**] In addition, the dummy wiring may be provided in the non-forming region of the first wiring, and the dummy connection hole in the second insulating film may be formed so as to reach the dummy wiring. If doing so, the dummy conductive plugs are connected to the dummy wiring. Since the second wiring can be supported firmly by the dummy conductive plugs that uses the dummy wiring as its foundation, the mechanical strength of the laminated body consisting of the second insulating film and the second wiring can be enhanced.

[**0029**] Where the dummy wiring is provided, it is preferable that a total wiring occupation ratio, incorporating both the first wiring and the dummy wiring, is substantially constant in a plane. If doing so, heights of the dummy wiring and the first wiring after polishing can easily be controlled as desired when the CMP (Chemical Mechanical Polishing) is carried out.

[**0030**] In addition, the stress-migration can be reduced desirably when p_1, an interval between neighboring dummy conductive plugs (i.e., an interval between neighboring dummy connection holes), is less than 1 μm.

[**0031**] In particular, when the interval p_1 is smaller than 0.6 μm, the stress-migration can be reduced more effectively.

[**0032**] Similarly, the stress-migration can be reduced preferably when p_2, an interval between neighboring conductive plug and dummy conductive plug (i.e., an interval between neighboring connection hole and dummy connection hole), is set to less than 1 μm.

[**0033**] Then, when this interval p_2 is set smaller than 0.6 μm, the stress-migration can be reduced more effectively.

[**0034**] Where plural second wirings are arranged in one region, it is preferable to reduce the inter-wiring capacitance between neighboring second wirings. To this end, a part of the conductive plugs or the dummy conductive plugs, which are buried in one second wiring, and a part of the conductive plugs or the dummy conductive plugs, which are buried in other second wiring, may be arranged not to oppose mutually in a direction perpendicular to any one of extending directions of two neighboring second wirings. By doing this, since each plugs in neighboring second wirings (including the conductive plugs and the dummy conductive plugs) are not arranged to oppose to each other, the opposing capacitance between the plugs can be reduced and thus the increase in the inter-wiring capacitance between the second wirings due to the opposing capacitance can be prevented.

[**0035**] Further, a third insulating film for covering the second wiring may be formed on the second wiring. In this case, as in the second insulating film, the wiring trench, the connection holes, and the dummy connection holes are formed in the third insulating film, and a third wiring is buried in them.

[**0036**] If the third wiring is provided in this manner, it is preferable to reduce the inter-wiring capacitance between the third wiring and the second wiring. To this end, when viewed from the upper side of the third wiring, a part of the conductive plugs and the dummy conductive plugs formed in the second wiring and a part of the conductive plugs and the dummy conductive plugs formed in the third wiring are

arranged not to oppose mutually in the direction that is perpendicular to any one of extending directions of the second wiring and the third wiring. By doing this, since each plugs (the conductive plugs and the dummy conductive plugs) formed in different wirings (the second wiring and the third wiring) are not arranged adjacently, the opposing capacitance between the plugs can be reduced and thus the increase in the inter-wiring capacitance between the second wiring and the third wiring due to the opposing capacitance can be prevented.

[0037] Then, it is preferable that the insulating film having a film made of polyarylether material should be employed as the first insulating film or the second insulating film. If such insulating film is employed, the inter-wiring capacitance can be reduced and thus an operation speed of the semiconductor device can be increased.

BRIEF DESCRIPTION OF THE DRAWINGS

[0038] **FIG. 1** is a sectional view showing a semiconductor device according to a first embodiment of the present invention;

[0039] **FIG. 2** is a plan view showing the semiconductor device according to the first embodiment of the present invention;

[0040] **FIG. 3** is a sectional view showing a semiconductor device according to a second embodiment of the present invention;

[0041] **FIG. 4** is a plan view showing the semiconductor device according to the second embodiment of the present invention;

[0042] **FIGS. 5A** to **5**C are plan views showing semiconductor devices according to a third embodiment of the present invention;

[0043] **FIG. 6** is a plan view showing a semiconductor device according to a fourth embodiment of the present invention;

[0044] **FIG. 7** is a sectional view taken along a III-III line in **FIG. 6**;

[0045] **FIG. 8** is a sectional view showing a semiconductor device according to a fifth embodiment of the present invention;

[0046] **FIG. 9** is a plan view showing the semiconductor device according to the fifth embodiment of the present invention;

[0047] **FIG. 10** is a plan view showing another semiconductor device according to the fifth embodiment of the present invention;

[0048] **FIG. 11** is a sectional view taken along a IV-IV line in **FIG. 10**;

[0049] **FIGS. 12A** to **12**N are sectional views showing a method of manufacturing the semiconductor device according to the embodiments of the present invention;

[0050] **FIG. 13** is a sectional view showing the disadvantage caused when an extreme difference in the wiring density is present, in the method of manufacturing the semiconductor device according to the embodiments of the present invention;

[0051] **FIG. 14** is a sectional view showing the case where four layers of wirings are formed, in the method of manufacturing the semiconductor device according to the embodiments of the present invention;

[0052] **FIG. 15A** is a graph showing a first simulation result of the semiconductor device according to the first embodiment of the present invention, and **FIG. 15B** is a sectional view showing a model used in this simulation;

[0053] **FIG. 16A** is a graph showing a second simulation result of the semiconductor device according to the first embodiment of the present invention, and **FIG. 16B** is a sectional view showing a model used in this simulation;

[0054] **FIGS. 17A** to **17**C are plan views showing models used in simulations of the semiconductor device according to the third embodiment of the present invention;

[0055] **FIG. 18** is a graph showing simulation results of the semiconductor device according to the third embodiment of the present invention;

[0056] **FIG. 19** is a sectional view showing the semiconductor device manufactured by the single damascene process in the prior art; and

[0057] **FIG. 20** is a sectional view showing the semiconductor device manufactured by the dual damascene process in the prior art.

DESCRIPTION OF THE PREFERRED EMBODIMENTS

[0058] Next, embodiments of the present invention will be explained in detail with reference to the accompanying drawings hereinafter.

[0059] (1) First Embodiment

[0060] **FIG. 1** is a sectional view showing a semiconductor device according to a first embodiment of the present invention.

[0061] In **FIG. 1**, reference numeral **20** denotes an underlying layer. This underlying layer **20** has a structure in which, for example, a MOSFET is formed in an active region of a silicon wafer (semiconductor substrate), then an insulating film is formed on a surface of the wafer, and then a conductive plug is buried in the insulating film. A low-dielectric insulating film **23** (film thickness: about 250 nm) and a silicon oxide film **24** (film thickness: about 250 nm) are laminated on such underlying layer **20**. A first insulating film **95** is constituted of the low-dielectric insulating film **23** and the silicon oxide film **24**.

[0062] In the present specification, the low-dielectric insulating film is defined as the insulating film whose dielectric constant is lower than the dielectric constant (4.1) of the silicon oxide film. For such insulating films, there is the insulating film made of polyarylether material, for example. As the insulating film made of polyarylether material, there is SiLK (trademark of The Dow Corning Co.). Since such SiLK has the low dielectric constant, the inter-wiring capacitance can be reduced and thus the operation speed of the semiconductor device can be increased.

[0063] Openings **23***a*, **24***a* are formed in the low-dielectric insulating film **23** and the silicon oxide film **24** respectively. A barrier metal layer **21** (film thickness: about 50 nm) is

formed on inner walls of the openings **23***a*, **24***a*. Such barrier metal layer **21** is made of the refractory metal such as Ta (tantalum), etc., for example.

[**0064**] Reference numeral **22** denotes a copper film that is formed on the barrier metal layer **21**. A first wiring **36** is constituted of such copper film **22** and the barrier metal layer **21**. The barrier metal layer **21** prevents copper contained in the copper film **22** from diffusing into the low-dielectric insulating film **23** and the silicon oxide film **24**.

[**0065**] In order to form such first wiring **36**, first the barrier metal layer **21** is formed on the inner walls of the openings **23***a*, **24***a* respectively and then the copper film **22** is formed thereon. Then, the barrier metal layer **21** and the copper film **22**, which are formed at the higher level than the silicon oxide film **24**, are polished and removed by the CMP (Chemical Mechanical Polishing) method, whereby the above structure can be obtained. Since the CMP is applied, each surfaces of the first wiring **36** and the first insulating film **95** are made substantially flat.

[**0066**] Then, a second insulating film **29** is formed on the substantially flat surface on which each surfaces of the first wiring **36** and the first insulating film **95** are continued. The first wiring **36** is covered with the second insulating film **29**. The second insulating film **29** is constituted by laminating a lower insulating film **38** and an upper insulating film **28**. These insulating films **38**, **28** are also constituted by laminating various insulating films. For example, the lower insulating film **38** is constituted by laminating a silicon nitride film **37** (film thickness: about 50 nm) and a silicon oxide film **25** (film thickness: about 700 nm). Then, the upper insulating film **28** is formed by laminating a low-dielectric insulating film **26** (film thickness: about 250 nm) and a silicon oxide film **27** (film thickness: about 250 nm). Among these films, the low-dielectric insulating film **26** is made of the same material for the low-dielectric insulating film **23**, such as SiLK.

[**0067**] Reference numeral **28***a* denotes a wiring trench. This wiring trench **28***a* is constructed by openings **26***b*, **27***b* formed in the low-dielectric insulating film **26** and the silicon oxide film **27** respectively. A via hole (connection hole) **38***a* extending from the wiring trench **28***a* to the first wiring **36** and a dummy via hole (dummy connection hole) **38***b* extending from the wiring trench **28***a* to a non-forming region of the first wiring **36** are formed in the lower insulating film **38**. The via hole **38***a* and the dummy via hole **38***b* are constructed by openings **37***a*, **25***a*, which are formed in the silicon nitride film **37** and the silicon oxide film **25** respectively.

[**0068**] Reference numeral **30** denotes a barrier metal layer (film thickness: about 50 nm) formed on inner walls of the via hole **38***a* and the dummy via hole **38***b* and is made of the refractory metal such as Ta (tantalum), or the like, for example. This barrier metal layer **30** is also formed on the first wiring **36** exposed from a bottom of the via hole **38***a*. A copper film **31** is buried in the via hole **38***a*, the dummy via hole **38***b*, and the wiring trench **28***a* via the barrier metal layer **30**.

[**0069**] Reference numeral **39** denotes a second wiring buried in the wiring trench **28***a*, and has a double-layered structure of the barrier metal layer **30** and the copper film **31**. A silicon nitride film **63** is formed on the second wiring **39**.

[**0070**] The second wiring **39** is also buried in the via hole **38***a* and the dummy via hole **38***b*. The portion of the second wiring **39**, which is buried in the via hole **38***a*, serves as a conductive plug **32** (referred to as a "plug" hereinafter). The portion of the second wiring **39**, which is buried in the dummy via hole **38***b*, serves as a dummy conductive plug **34** (referred to as a "dummy plug" hereinafter).

[**0071**] A positional relationship between the plugs (including the plug **32** and the dummy plug **34**) is argued in the following. In this case, it should be noted that this positional relationship can be replaced with that between the holes (including the via hole **38***a* and the dummy via hole **38***b*).

[**0072**] As will be described later, this semiconductor device is manufactured by the dual damascene process. Therefore, the second wiring **39** is formed integrally with the plug **32** and the dummy plug **34**. Such feature is not found in the single dual damascene process in which the barrier metal layer is interposed between the wiring and the plug.

[**0073**] The plug **32** is also electrically connected to the first wiring **36**, and functions to connect the first wiring **36** to the second wiring **39** electrically.

[**0074**] On the other hand, the dummy plug **34** constitutes one of the features of the present invention. In **FIG. 1, L** denotes a distance between centers of each neighboring plugs **32**, **32**. Where the dummy plug **34** is absent, this L gives a wiring length of the second wiring **39**.

[**0075**] However, where the dummy via hole **38***b* is provided and the dummy plug **34** is buried therein as in the present invention, the distance between the neighboring plugs (including the plug **32** and the dummy plug **34**) can been seen as L1 or L2, and become shorter than the above L. Accordingly, in the present invention, the stress migration that occurs frequently when the wiring length is long can be suppressed, and the lifting-up of the copper film **31** in the via hole **38***a* can be suppressed, so that the connection failure between the plug **32** and the first wiring **36** can be prevented. As a result, since the fraction defective of the semiconductor device in the thermal process can be lowered, the yield of the semiconductor device can be improved consequently and thus a production cost of the semiconductor device can be reduced.

[**0076**] Also, since a sectional area of the second wiring **39** increases in the portion where the dummy plug **34** is provided, the resistance of the wiring can be reduced. Accordingly, it is also made possible to increase the operation speed of the semiconductor device.

[**0077**] In addition, since this dummy plug **34** can also act as a source of copper atoms that move in the second wiring **39** together with the electrons, the situation where the second wiring **39** is disconnected because of the lack of the copper atoms, i.e., the so-called electromigration, can also be prevented.

[**0078**] The number of the dummy via holes **38***b* is not limited. The above advantage can be obtained by providing arbitrary number of the dummy via holes **38***b*.

[**0079**] In **FIG. 1**, reference numeral **40** denotes a different-potential wiring that has a different potential than the first wiring **36**. It is preferable that the dummy via holes **38***b* is formed out of this different-potential wiring **40**. This is

because, if the dummy plug **34** is connected to the different-potential wiring **40**, the first wiring **36** and the different-potential wiring **40** are electrically connected and hence the circuit cannot desirably function.

[**0080**] A planar arrangement of each plugs are shown in **FIG. 2**. **FIG. 2** is a plan view showing the semiconductor device according to the first embodiment. In **FIG. 2**, for easy understanding of the arrangement of the plugs, the underlying layer **20** (see **FIG. 1**) and each insulating films are omitted. Also, above **FIG. 1** corresponds to the sectional view taken along a I-I line in **FIG. 2**.

[**0081**] Next, results of simulations about the present embodiment made by the inventors of the present invention will be explained with reference to **FIGS. 15A and 15B** and **FIGS. 16A and 16B** hereunder.

[**0082**] **FIG. 15A** is a graph showing a first simulation result of the semiconductor device according to the first embodiment, and **FIG. 15B** is a sectional view showing a model used in this simulation. **FIG. 16A** is a graph showing a second simulation result of the semiconductor device according to the first embodiment, and **FIG. 16B** is a sectional view showing a model used in this simulation.

[**0083**] In the simulations in **FIGS. 15A, 15B**, **16**A, and **16**B, the distance between the centers of the neighboring plugs **32**, **32** (i.e., the wiring length) was fixed to 10 μm. Then, as the model of the plug **32** and the dummy plug **34**, a circular cylinder whose diameter is 0.15 μm and whose height is 0.42 μm was employed.

[**0084**] In the first simulation (**FIGS. 15A and 15B**), a difference $\Delta\sigma$ of vertical components of the stress on the upper surface and the lower surface of the plug **32** was investigated while varying a pitch (interval) p_1 between the neighboring dummy plugs **34**, **34**. If the difference $\Delta\sigma$ is large, a force applied to the plug **32** in the vertical direction becomes large and therefore the plug **32** is ready to peel from the first wiring **36** (see **FIG. 1**). In other words, if the difference $\Delta\sigma$ is large, the stress-migration is ready to occur.

[**0085**] As can be seen from **FIG. 15**A, the difference $\Delta\sigma$ tends to decrease in the range where the pitch p_1 is smaller than 1 μm and thus the stress-migration is hard to occur. In particular, if the pitch p_1 is smaller than 0.6 μm, the difference $\Delta\sigma$ decreases abruptly. Therefore, in order to prevent the stress-migration, it is preferable that the pitch p_1 is less than 1 μm. Also, in order to prevent the stress-migration more effectively, it is preferable that the pitch p_1 is less than 0.6 μm.

[**0086**] Also, in the second simulation (**FIGS. 16A and 16B**), a dependency of the above difference $\Delta\sigma$ on a first pitch p_2 (an interval between the plug **32** and the dummy plug **34** being arranged adjacently) was investigated while varying the first pitch p_2. In this case, the distance between the neighboring dummy plugs **34**, **34** was fixed to 0.3 μm.

[**0087**] As can be seen from **FIG. 16**A, the difference $\Delta\sigma$ tends to decrease in the range where the first pitch p_2 is smaller than 1 μm and thus the stress-migration is hard to occur. In particular, if the first pitch p_2 is smaller than 0.6 μm, the difference $\Delta\sigma$ decreases abruptly. Therefore, in order to prevent the stress-migration, it is preferable that the first pitch p_2 is less than 1 μm. Also, in order to prevent the stress-migration more effectively, it is preferable that the first pitch p_2 is less than 0.6 μm.

[**0088**] (2) Second Embodiment

[**0089**] **FIG. 3** is a sectional view showing a semiconductor device according to a second embodiment of the present invention. In **FIG. 3**, the same reference numerals as those in **FIG. 1** are affixed to the members explained in **FIG. 1** and their explanation will be omitted hereunder.

[**0090**] In the second embodiment, as shown in **FIG. 3, a** dummy wiring **41** is provided in the non-forming region of the first wiring **36**, and the dummy via hole **38***b* is formed to reach this dummy wiring **41**. Then, the dummy plugs **34** are formed to connect to this dummy wiring **41**. In this case, the non-forming region of the wiring is defined as the region where the wiring is not formed in the layer in which the wiring is formed. Like the first wiring **36**, this dummy wiring **41** has the double-layered structure of the barrier metal layer **21** and the copper film **22**.

[**0091**] According to this, since the second wiring **39** can be firmly supported by the dummy plugs **34** that uses the dummy wiring **41** as its foundation, the mechanical strength of the laminated body consisting of the second insulating film **29** and the second wiring **39** can be enhanced. Such advantage is particularly useful for the situation where the low-dielectric insulating film of SiLK, or the like is employed in place of the silicon oxide film **25** to lower the overall dielectric constant of the second insulating film **29**. If the present embodiment is applied to this case, the reduction in the strength of the laminated body consisting of the low-dielectric insulating film and the second wiring **39** due to the weakness of the mechanical strength of the low-dielectric insulating film can be prevented.

[**0092**] A planar arrangement of each plugs in the present embodiment is shown in **FIG. 4**. **FIG. 4** is a plan view showing the semiconductor device according to the second embodiment. In **FIG. 4**, for easy understanding of the arrangement of each plugs, the underlying layer **20** (see **FIG. 3**) and each insulating films are omitted. Also, above **FIG. 3** corresponds to a sectional view that is taken along a II-II line in **FIG. 4**.

[**0093**] (3) Third Embodiment

[**0094**] **FIGS. 5A** to **5**C are plan views showing semiconductor devices according to a third embodiment of the present invention. In these figures, in order to make the planar arrangement of each plugs and the planar shape of the second wiring **39** easy to see, the underlying layer **20** (see **FIGS. 1 and 3**) and each insulating films are omitted.

[**0095**] In the first and second embodiments, as shown in **FIG. 2** and **FIG. 4**, the planar shape of the second wiring **39** is a linear shape. However, the planar shape of the second wiring **39** is not limited to the linear shape. The planar shape may be of a solid shape, as shown in **FIGS. 5A** to **5**C.

[**0096**] **FIG. 5A** shows an example in which the plug **32** is provided in vicinity of the center of the solid second wiring **39**, and a plurality of dummy plugs **34** are provided around such plug **32**.

[**0097**] **FIG. 5B** shows an example in which the plug **32** is provided to one edge portion of the solid second wiring **39** and a plurality of dummy plugs **34** are provided in vicinity of such one edge portion.

[0098] **FIG. 5C** shows an example in which the plug **32** is provided to one corner of the solid second wiring **39** and a plurality of dummy plugs **34** are provided in vicinity of such one corner.

[0099] All of the examples shown in **FIGS. 5A** to **5**C can obtain the advantage similar to the first embodiment.

[0100] Next, results of simulations about the present embodiment made by the inventors of the present invention will be explained with reference to **FIGS. 17A** to **17**C and **FIG. 18** hereunder.

[0101] **FIGS. 17A** to **17**C are plan views showing models used in the simulations of the semiconductor device.

[0102] **FIG. 17A** shows the case where the plug **32** is provided solely in the solid second wiring **39** without providing the dummy plug **34**.

[0103] **FIG. 17B** shows the case where the dummy plugs **34** are provided in the second wiring **39** to singly surround the plug **32**.

[0104] **FIG. 17C** shows the case where the dummy plugs **34** are provided in the second wiring **39** to doubly surround the plug **32**.

[0105] In all the cases in **FIGS. 17A** to **17**C, a circular cylinder whose diameter is 0.15 μm and whose height is 0.42 μm was employed as the model of the plug **32** and the dummy plug **34**. Also, the width of the second wiring **39** was fixed to 2 μm. Then, the interval between the neighboring plugs (including the plug **32** and the dummy plug **34**) was fixed to 0.3 μm.

[0106] Simulation results are shown in **FIG. 18**. In **FIG. 18**, the meaning of $\Delta\sigma$ on an ordinate is similar to that explained in **FIGS. 15A and 15B**, and is the difference of vertical components of the stress on the upper surface and the lower surface of the plug **32**.

[0107] As can be seen from **FIG. 18**, where the plug **32** is solely provided (see **FIG. 17A**), the difference $\Delta\sigma$ is large and thus the stress-migration is ready to occur. In contrast, it is understood that where the plugs **34** are provided to surround singly or doubly the plug **32** (see **FIG. 17**B and **FIG. 17C**), the difference $\Delta\sigma$ decreases than the case where the plug **32** is provided solely, and thus the stress-migration is hard to occur.

[0108] As a result, even in the case where the wiring length of the second wiring **39** is not defined like the case where only one plug **32** is provided in the solid second wiring **39**, the stress-migration can be reduced by providing a plurality of dummy plugs **34** around the plug **32**. In other words, this means that, if a plurality of dummy via holes **38***b* are provided around the via hole **38***a*, the stress-migration can be reduced.

[0109] (4) Fourth Embodiment

[0110] **FIG. 6** is a plan view showing a semiconductor device according to a fourth embodiment of the present invention. In **FIG. 6**, in order to make the planar arrangement of the each plugs and the second wiring **39** easy to see, the underlying layer **20** (see **FIGS. 1 and 3**) and each insulating films are omitted. Also, **FIG. 7** is a sectional view taken along a III-III line in **FIG. 6**. As described later, the present embodiment is suitable for increasing the operation speed of the semiconductor device.

[0111] As shown in **FIG. 6**, in the present embodiment, a plurality of second wirings **39** are arranged at an interval in one area A. Then, in the two neighboring second wirings **39**, the dummy plug **34** in one second wiring **39** is not arranged next to the dummy plug **34** in the other second wiring **39** along the direction that is perpendicular to an extending direction of the second wiring **39**. Here, the extending direction of the second wiring **39** means any one of extending directions of two adjacent second wirings.

[0112] According to this, since the dummy plugs **34** in the neighboring second wirings **39** are arranged not to oppose to each other, an opposing capacitance between the dummy plugs **34** can be reduced. Therefore, the increase in the inter-wiring capacitance between the second wirings **39** due to the opposing capacitance can be prevented.

[0113] In the above, the opposing capacitance between the dummy plugs **34** was considered. However, the above can be applied to the plugs **32**. If the above is applied to the plugs **32**, the opposing capacitance between the plugs **32** in the neighboring second wirings **39** can also be reduced. In addition, if the above is applied to the different type plugs (the plug **32** and the dummy plug **34**), the opposing capacitance between the plug **32** and the dummy plug **34** can also be reduced.

[0114] The number of the plugs **32** and the dummy plugs **34** is not limited. If the above is applied to a part of the plugs **32** or a part of the dummy plugs **34** in the second wirings **39**, the inter-wiring capacitance between the second wirings **39** can also be reduced.

[0115] (5) Fifth Embodiment

[0116] **FIG. 8** is a sectional view showing a semiconductor device according to a fifth embodiment of the present invention. In **FIG. 8**, reference numerals similar to those in the above are affixed to the members explained already in the above, and thus their explanation will be omitted hereunder.

[0117] In the first to fourth embodiments, the wirings are two layers of the first wiring **36** and the second wiring **39**. However, the number of the wiring layers is not limited to two layers. In the present embodiment, as shown in **FIG. 8, a** third wiring **51** is provided above the second wiring **39**, so that the number of the wiring layers is three layers.

[0118] This third wiring **51** has a double-layered structure consisting of a copper film **71** and a barrier metal layer **72** and is buried in a wiring trench **69***a*. Such wiring trench **69***a* is formed in an upper insulating film **69**. This upper insulating film **69** is composed of a low-dielectric insulating film **65** (film thickness: about 250 nm) and a silicon oxide film **66** (film thickness: about 250 nm). As the low-dielectric insulating film **65**, the material similar to the low-dielectric insulating films **23**, **26** being already explained, such as SiLK, can be employed. The above wiring trench **69***a* is composed of openings **65***b*, **66***b* formed in the low-dielectric insulating film **65** and the silicon oxide film **66**.

[0119] In **FIG. 8**, reference numeral **68** denotes a lower insulating film constituted of a silicon nitride film **63** (film thickness: about 50 nm) and a silicon oxide film **64** (film thickness: about 700 nm).

[0120] Reference numeral **68***a* denotes via hole (connection hole) and is formed in the lower insulating film **68** to reach the second wiring **39**. Such via hole **68***a* is constructed by openings **63***a*, **64***a* formed in the silicon nitride film **63** and the silicon oxide film **64**.

[0121] Reference numeral **68***b* denotes a dummy via hole (dummy connection hole) and is formed in the lower insulating film **68** to reach the non-forming region of the second wiring **39**. Such dummy via hole **68***b* is constructed by openings **63***b*, **64***b* formed in the silicon nitride film **63** and the silicon oxide film **64**.

[0122] The third wiring **51** is also buried in the via hole **68***a* and the dummy via hole **68***b*. In the following, the portion of the third wiring **51**, which is buried in the via hole **68***a*, is called a plug **53** and the portion of the third wiring **51**, which is buried in the dummy via hole **68***b*, is called a dummy plug **52**.

[0123] A third insulating film **70** is constructed by the lower insulating film **68** and the upper insulating film **69**. Here, the reference numeral **73** denotes a silicon nitride film that covers the third wiring **51**.

[0124] **FIG. 9** is a plan view showing the semiconductor device according to the fifth embodiment of the present invention.

[0125] The planar shape of the third wiring **51** is not limited. The third wiring **51** may be formed like a line shape, or may be formed as a solid shape shown in **FIG. 9**.

[0126] In **FIG. 9**, reference numeral **60** denotes a different-potential wiring that has a different potential from those of the second wiring **39** and the third wiring **51**, and is formed in the same layer as the second wiring **39**. It is preferable that the dummy plug **52** in the third wiring **51** should be formed out of this different-potential wiring **60**. This is because, if the dummy plug **52** is connected to the different-potential wiring **60**, the second wiring **39** and the different-potential wiring **60** are connected electrically and thus the circuit cannot desirably function.

[0127] Then, reference numeral **61** denotes a dummy wiring formed in the same layer as the second wiring **39**. The dummy plug **52** may be connected to this dummy wiring **61**. If they are connected in this manner, the mechanical strength of the laminated body consisting of the silicon oxide film **64** (see **FIG. 8**) and the third wiring **51** can be enhanced by the same reason as the second embodiment.

[0128] **FIG. 10** is a plan view showing another semiconductor device according to the fifth embodiment of the present invention. **FIG. 11** is a sectional view taken along a IV-IV line in **FIG. 10**.

[0129] In the fourth embodiment, the reduction in the inter-wiring capacitance in the same layer (i.e., the capacitance between the second wirings **39**) was explained. It is preferable that the inter-wiring capacitance is reduced, not only in the same layer, but also in the different layers.

[0130] In the fifth embodiment, in order to reduce the inter-wiring capacitance between the different layers, each plugs are arranged as shown in **FIG. 10**. According to such arrangement, if viewed from the upper side of the third wiring **51**, the dummy plug **34** in the second wiring **39** and the dummy plug **52** in the third wiring **51** are not arranged adjacently in the direction that is perpendicular to the extending direction of the second wiring **39**. The same argument holds when considering the extending direction of the third wiring **51**, instead of the extending direction of the second wiring **39**.

[0131] According to this, since the dummy plug **34** in the second wiring **39** is not arranged next to the dummy plug **52** in the third wiring **51**, the opposing capacitance between the dummy plugs **34**, **52** can be reduced. Therefore, increasing in the inter-wiring capacitance between the second wiring **39** and the third wiring **51** due to the opposing capacitance of the plugs can be prevented.

[0132] In the above, the opposing capacitance between the dummy plugs **34**, **52** was argued. However, by applying this argument to the plugs **32**, **53**, the opposing capacitance between these plugs **32**, **53** can be reduced. In addition, by applying this argument to the different-type plugs (the plug **32** and the dummy plug **52**, or the plug **53** and the dummy plug **34**), the opposing capacitance between these plugs can also be reduced.

[0133] The number of the plugs **32**, **53** and the dummy plugs **34**, **52** as the objects for obtaining the above advantage is not limited. If the above is applied to a part of the plugs **32**, **51** or a part of the dummy plugs **34**, **52** in the second wirings **39** and the third wiring **51**, the inter-wiring capacitance between the second wiring **39** and the third wiring **51** can also be reduced.

[0134] (6) Explanation of the Manufacturing Method

[0135] Next, a method of manufacturing the above semiconductor device will be explained with reference to **FIGS. 12A** to **12N** hereunder. **FIGS. 12A** to **12N** are sectional views showing the method of manufacturing the semiconductor device according to the embodiments of the present invention. This manufacturing method is the so-called dual damascene process in which the wirings and the plugs are formed integrally.

[0136] First of all, as shown in **FIG. 12A**, the low-dielectric insulating film **23** (film thickness: about 250 nm) is formed on the underlying layer **20**. This underlying layer **20** has a structure in which, for example, the MOSFET is formed in the active region of the silicon wafer (semiconductor substrate), then the insulating film is formed on the surface of the wafer, and then the conductive plug is buried in this insulating film.

[0137] SiLK can be employed as the low-dielectric insulating film **23**. SiLK is coated by the spin coating and cured by the annealing process at 400° C. for 30 minutes.

[0138] Then, the silicon oxide film **24** (film thickness: about 250 nm) is formed on this low-dielectric insulating film **23**. In order to form the silicon oxide film **24**, for example, the well-known plasma enhanced CVD (plasma Enhanced Chemical Vapor Deposition) method is employed.

[0139] Then, a photoresist layer **54** is formed on this silicon oxide film **24**. Openings **54***a* each having a wiring pattern shape are formed in the photoresist layer **54** by the photolithography.

[0140] Then, as shown in **FIG. 12B**, the silicon oxide film **24** is etched by using the photoresist layer **54** as an etching mask. The openings **54***a* are transferred onto the silicon

oxide film **24** by this etching and thus openings **24***a* are formed in the silicon oxide film **24**. Also, this etching is executed by RIE (Reactive Ion Etching) and the CF etching gas is used.

[**0141**] Then, the low-dielectric insulating film **23** is etched by using the silicon oxide film **24** as an etching mask. The openings **24***a* are transferred to the low-dielectric insulating film **23** by this etching and thus openings **23***a* are formed in the low-dielectric insulating film **23**. As the etching gas used in this etching, the plasmanized gas mixture consisting of H_2 and NH_3 is employed. Against this etching gas, the photoresist layer **54** has an etching rate that is substantially the same level to that of the low-dielectric insulating film **23**. Therefore, the photoresist layer **54** is removed at the same time when the low-dielectric insulating film **23** is etched.

[**0142**] Then, as shown in **FIG. 12**C, the barrier metal layer **21** (film thickness: about 50 nm) is formed on the overall exposed surface. Such barrier metal layer **21** is made of the refractory metal such as Ta (tantalum), etc., for example, and is formed by the sputtering, or the like.

[**0143**] Then, the copper film **22** is formed on this barrier metal layer **21**. The copper film **22** is formed by the sputtering and has a film thickness (about 1500 nm) that can fill the openings **23***a*, **24***a* completely. The method of forming the copper film **22** is not limited. In place of the above, a thin copper seed layer may be formed on the barrier metal layer **21** and then the copper film **22** may be formed by the electrolytic plating while using this seed layer as the power supply layer.

[**0144**] Then, as shown in **FIG. 12**D, along with planarizing a surface of the copper film **22**, the unnecessary copper film **22** and the unnecessary barrier metal layer **21** on the silicon oxide film **24** are removed by the CMP (Chemical Mechanical Polishing) method. Thus, the copper film **22** and the barrier metal layer **21** remain only in the openings **23***a*, **24***a*. The residual copper film **22** and the barrier metal layer **21** constitute the first wiring **36** and the dummy wiring **41**. A substantially flat surface on which surfaces of the first wiring **36** and a first insulating film **95** are each continued can be obtained by this CMP.

[**0145**] By the way, in order to execute the above CMP preferably, it is preferable that a total wiring occupation ratio, incorporating both the first wiring **36** and the dummy wiring **41**, is substantially constant in the plane. In the present specification, the "wiring occupation ratio" is defined as a value (B/A) that is given by setting a virtual region (whose shape is not limited) of an arbitrary area A in the wiring layer and then dividing a total area B of the wirings in this virtual region by the area A.

[**0146**] If the wiring density varies extremely as in **FIG. 13**, the wiring occupation ratio cannot be said as constant in the plane because this ratio largely differs between the dense wiring portion and the sparse wiring portion. In this case, since the CMP slurry disperses onto the first wiring **36** and the dummy wiring **41** in the dense wiring portion, a polishing amount becomes small and thus a height of the polished wirings becomes high in the dense portion. In contrast, since the CMP slurry concentrates to the first wiring **36** in the sparse wiring portion, a polishing amount becomes large and thus a height of the polished wirings becomes low in the sparse portion.

[**0147**] In this manner, when the wiring occupation ratio is not constant in the plane, the variation in the height of the wirings is brought about and thus it is difficult to control the height of the wirings.

[**0148**] On the contrary, as shown in **FIG. 12**D, if the wiring occupation ratio is substantially constant, the CMP slurry can disperse uniformly to the first wiring **36** and the dummy wiring **41**. Therefore, a polishing amount does not vary in the plane and thus the height of the wirings can be controlled easily.

[**0149**] After the CMP is executed as above, steps shown in **FIG. 12E** are carried out. In these steps, the silicon nitride film **37** (film thickness: about 50 nm) is formed to cover the first wiring **36** and the dummy wiring **41**. This silicon nitride film **37** is formed by the well-known plasma enhanced CVD method, for example.

[**0150**] Then, the silicon oxide film **25** (film thickness: about 1200 nm) is formed on the silicon nitride film **37**. The silicon oxide film **25** is also formed by the well-known plasma enhanced CVD method, and then a surface of the silicon oxide film **25** is planarized by the CMP method. A residual thickness of the silicon oxide film **25** becomes about 700 nm by this CMP. The lower insulating film **38** is constructed by the silicon nitride film **37** and the remaining silicon oxide film **25**.

[**0151**] Then, the low-dielectric insulating film **26** (film thickness: about 250 nm), the silicon oxide film **27** (film thickness: about 250 nm), and a metal film **55** are laminated on the silicon oxide film **25**. The upper insulating film **28** is constructed by the low-dielectric insulating film **26** and the silicon oxide film **27**.

[**0152**] As the low-dielectric insulating film **26**, SiLK, or the like can be employed. Also, the silicon oxide film **27** is formed by the well-known plasma enhanced CVD method. The metal film **55** is made of TiN, or the like, for example, and is formed by the sputtering, etc. A film which has the high selective etching ratio to the silicon oxide film, such as the silicon nitride film, may be employed instead of the metal film **55**.

[**0153**] Then, after the formation of the metal film **55**, a photoresist layer **56** is formed thereon. An opening **56***a* having the wiring pattern shape is opened in the photoresist layer **56** by the photolithography.

[**0154**] Then, as shown in **FIG. 12**F, the metal film **55** is etched by using the photoresist layer **56** as an etching mask. Thus, the opening **56***a* is transferred onto the metal film **55** and thus an opening **55***a* is formed in the metal film **55**. This etching is executed by RIE and the Cl containing etching gas is employed. After this etching is completed, the photoresist layer **56** is removed by the ashing using the O_2 plasma.

[**0155**] Then, as shown in **FIG. 12G, a** new photoresist layer **57** is formed. The forming areas of the photoresist layer **57** are on the metal film **55** and on the silicon oxide film **27** exposed from the opening **55***a*. Openings **57***a* having the via pattern shape are formed in the photoresist layer **57** by the photolithography.

[**0156**] Then, as shown in **FIG. 12**H, the silicon oxide film **27** is etched by using the photoresist layer **57** as an etching mask. Such etching is executed by RIE and the CF containing etching gas is employed. Since the low-dielectric insu-

lating film **26** has the etching resistance against this etching gas, this etching is stopped on the surface of the low-dielectric insulating film **26**. Thus, the openings **57***a* in the photoresist layer **57** are transferred onto the silicon oxide film **27** by this etching, and thus the openings **27***a* are formed in the silicon oxide film **27**.

[**0157**] Then, as shown in **FIG. 12**I, the low-dielectric insulating film **26** is etched by using the silicon oxide film **27** as an etching mask. Thus, the openings **27***a* are transferred onto the low-dielectric insulating film **26** and thus the openings **26***a* are formed in the low-dielectric insulating film **26**. This etching is executed by RIE using the gas mixture consisting of H_2 and NH_3 as an etching gas.

[**0158**] Against this etching gas, the photoresist layer **57** (see **FIG. 12H**) has the etching rate that is substantially the same level to that of the low-dielectric insulating film **26**. Therefore, the photoresist layer **57** is removed simultaneously when the low-dielectric insulating film **26** is etched.

[**0159**] Then, as shown in **FIG. 12**J, the silicon oxide film **27** is etched by using the metal film **55** as an etching mask. Thus, the openings **55***a* are transferred onto the silicon oxide film **27** and thus the openings **27***b* are formed in the silicon oxide film **27**. This etching is executed by RIE using the CF containing etching gas.

[**0160**] At this time, the silicon oxide film **25** that is exposed from the openings **26***a* in the low-dielectric insulating film **26** is etched simultaneously. Thus, the openings **26***a* are transferred onto the silicon oxide film **25** and the openings **25***a* are formed in the silicon oxide film **25**.

[**0161**] Then, as shown in **FIG. 12**K, the low-dielectric insulating film **26** is etched by using the silicon oxide film **27** as an etching mask. Thus, the openings **27***b* in the silicon oxide film **27** are transferred onto the low-dielectric insulating film **26** and thus the openings **26***b* are formed in the low-dielectric insulating film **26**. Such etching is executed by RIE using the gas mixture consisting of H_2 and NH_3 as an etching gas.

[**0162**] Then, the silicon nitride film **37** is etched by using the silicon oxide film **25** as an etching gas. The openings **25***a* in the silicon oxide film **25** are transferred onto the silicon nitride film **37** and thus the openings **37***a* are formed in the silicon nitride film **37**.

[**0163**] In this case, each of the low-dielectric insulating film **26** and the silicon nitride film **37** may be etched, either prior or subsequent to the other.

[**0164**] Up to this step, formations of the via holes **38***a*, the dummy via holes **38***b*, and the wiring trench **28***a* are completed. The wiring trench **28***a* is constructed by the openings **27***b* and **26***b*. While, the via hole **38***a* and the dummy via hole **38***b* are each constructed by the openings **25***a* and **37***a*.

[**0165**] The via holes **38***a* are formed to extend from the wiring trench **28***a* to the first wiring **36**. Then, the dummy via holes **38***b* may be formed to reach the non-forming region of the first wiring **36** or reach the dummy wiring **41**.

[**0166**] Then, as shown in **FIG. 12**L, the barrier metal layer **30** is formed. The forming areas of the barrier metal layer **30** are on the metal film **55**, inner walls of the wiring trench **28***a*, inner walls (including bottom surfaces) of the via holes **38***a*, and inner walls (including bottom surfaces) of the dummy via holes **38***b*. The barrier metal layer **30** is made of the refractory metal such as Ta (tantalum), for example, and is formed by the sputtering, etc.

[**0167**] Then, the copper film **31** (film thickness: about 1500 nm) is formed on the barrier metal layer **30** by the sputtering. The method of forming the copper film **31** is not limited to this. For example, a thin copper seed layer may be formed on the barrier metal layer **30** and then the copper film **31** may be formed by the electrolytic plating while using this seed layer as the power supply layer.

[**0168**] Then, as shown in **FIG. 12**M, the copper film **31**, the barrier metal layer **30**, and the metal film **55**, which are each formed higher than the silicon oxide film **27**, are polished by the CMP method to be removed. The barrier metal layer **30** and the copper film **31**, which are not polished and left behind, constitute the second wiring **39**. Then, the portion of the second wiring **39**, which is buried in the via hole **38***a*, is served as the plug, and the portion of the second wiring **39**, which is buried in the dummy via hole **38***b*, is served as the dummy plug. Also, the substantially flat surface on which surfaces of the second wiring **39** and the second insulating film **29** are each continued can be obtained by this CMP.

[**0169**] Then, as shown in **FIG. 12**N, the silicon nitride film **63** is formed on the second wiring **39**. This silicon nitride film **63** is formed by the well-known plasma enhanced CVD method.

[**0170**] According to the above, the semiconductor device according to the embodiment of the present invention is completed.

[**0171**] Although the structure of two wiring layers (the first wiring**36** and the second wiring **39**) is obtained in the above, any number of wirings can be laminated by repeating the method same to described above. The case where four layers are laminated will be explained in the following.

[**0172**] **FIG. 14** is a sectional view showing the case where the four wirings layers are laminated. In this example, the device isolation trench is formed in a predetermined region of a silicon substrate **96**. Then, the insulator such as the silicon oxide is buried in the device isolation trench, whereby device isolation insulating regions **80** of the shallow trench isolation (STI) are formed.

[**0173**] Then, gate electrodes **84** and sidewall spacers **83** are formed on active regions of wells **81** that are defined by the device isolation insulating regions **80**, and then source/drain regions S/D are formed by the ion-implantation on both sides of the gate electrodes **84**. An etching stopper film **82** is formed to cover the insulating gate electrodes **84**, and then an interlayer insulating film **87** is formed thereon. Conductive plugs, constituted of a barrier metal layer **85** and a metal film **86**, are formed to pass through the interlayer insulating film **87** and the etching stopper film **82**. The underlying layer **20** in the present embodiment and each embodiments of the present invention is constructed by above members, for example.

[**0174**] Then, a first insulating film **95** is formed on the interlayer insulating film **87** by the method described above, and then the first wirings **36** are buried in the first insulating film **95**.

[0175] Then, the second insulating film **29** is formed on the first wiring **36** by the method described above, and the second wirings **39** are buried in the second insulating film **29**. As described above, the substantially flat surface, on which surfaces of the second wirings **39** and the second insulating film **29** are each continued, can be obtained after the second wirings **39** are buried.

[0176] The silicon nitride film **63** and the silicon oxide film **64** are formed on the second wirings **39**. Then, the surface of the silicon oxide film **64** is polished by the CMP to planarize.

[0177] Then, the low-dielectric insulating film **65** and the silicon oxide film **66** are formed on the silicon oxide film **64**. As the low-dielectric insulating film **65**, SiLK, or the like can be employed. The silicon oxide film **66** is formed by the well-known plasma enhanced CVD method. The silicon nitride film **63**, the silicon oxide film **64**, the low-dielectric insulating film **65**, and the silicon oxide film **66** constitute the third insulating film **70**.

[0178] Next, the third wirings **51** are buried in the third insulating film **70** by the method similar to that used to bury the second wirings **39** in the second insulating film **29**, which is already described. Because the CMP is executed after the second wirings **39** are buried, the substantially flat surface on which surfaces of the third wirings **51** and the third insulating film **70** are each continued can be obtained.

[0179] Then, a silicon nitride film **73** and a silicon oxide film **88** are laminated on the third insulating film **70**. These films are formed by the well-known plasma enhanced CVD method. Then, a surface of the silicon oxide film **88** is polished by executing the CMP and is planarized. A lower insulating film **97** is constituted of the silicon nitride film **73** and the silicon oxide film **88**.

[0180] Next, a low-dielectric insulating film **89** and a silicon oxide film **90** are laminated on the lower insulating film **97**. As the low-dielectric insulating film **89**, SiLK, or the like can be employed. Then, the silicon oxide film **90** is formed by the well-known plasma enhanced CVD method. An upper insulating film **98** is constituted of the low-dielectric insulating film **89** and the silicon oxide film **90**. Also, a fourth insulating film **99** is constructed by the upper insulating film **98** and the lower insulating film **97**.

[0181] Then, fourth wirings **94** are buried in the fourth insulating film **99** by the method similar to that used to bury the second wirings **39** into the second insulating film **29**, which is already described. Such fourth wirings **94** have a double-layered structure consisting of a barrier metal layer **92** and a copper film **93**, and the barrier metal layer **92** is made of the refractory metal such as Ta (tantalum), for example. Because the CMP is executed after the fourth wirings **94** are buried, the substantially flat surface on which surfaces of the fourth wirings **94** and the fourth insulating film **99** are each continued can be obtained. Finally, a silicon nitride film **91** is formed on the fourth wirings **94** to protect the fourth wirings **94**.

[0182] Though the embodiments of the present invention are explained in detail as above, the present invention is not limited to the above embodiments.

[0183] For example, in the above embodiments, the aluminum film may be used instead of the copper films **22**, **31**, **71**, **93**.

[0184] In addition, the upper insulating film **28** is not limited to the laminated structure consisting of the low-dielectric insulating film **26** and the silicon oxide film **27**. The upper insulating film **28** may be made of the laminated body consisting of the silicon nitride film and the silicon oxide film, like the lower insulating film **38**.

[0185] As described above, according to the semiconductor device of the present invention, since the dummy connection holes are provided in the second insulating film and then the dummy conductive plugs are formed by burying the second wiring in the holes, the stress-migration resistance can be improved.

[0186] Also, since the dummy wiring is provided in the non-forming region of the first wiring and then the dummy conductive plugs are connected to this dummy wiring by forming the dummy connection holes to reach this dummy wiring, the mechanical strength of the laminated body consisting of the insulating film and the second wiring can be enhanced.

[0187] Since the total wiring occupation ratio, incorporating both the first wiring and the dummy wiring, is substantially constant in the plane, polished heights of the dummy wiring and the first wiring can be easily controlled as desired in the CMP.

[0188] In addition, since the pitch p_1 between the neighboring dummy connection holes is set to less than 1 μm, the stress-migration can be reduced desirably.

[0189] In particular, if the pitch p_1 is set smaller than 0.6 μm, the stress-migration can be reduced more effectively.

[0190] Similarly, if the pitch p_2 between neighboring connection hole and dummy connection hole is set to less than 1 μm, the stress-migration can be reduced preferably.

[0191] Then, if this pitch p_2 is set smaller than 0.6 μm, the stress-migration can be reduced more effectively.

[0192] Further, since plural second wirings are provided such that the conductive plugs and the dummy conductive plugs are not opposed mutually in neighboring second wirings, the inter-wiring capacitance between neighboring second wirings can be reduced.

[0193] Moreover, the third wiring that is connected to the conductive plugs and the dummy conductive plugs may be arranged at the higher position than the second wiring. In this case, since the third wiring is provided such that the conductive plugs and the dummy conductive plugs are not opposed mutually in the second wiring and the third wiring if viewed from the upper side of the third wiring, the inter-wiring capacitance between the second wiring and the third wiring can be reduced.

[0194] Then, if the insulating film containing the low-dielectric insulating film is employed as the insulating film, the inter-wiring capacitance can be reduced and thus the operation speed of the semiconductor device can be increased.

What is claimed is:

1. A semiconductor device comprising:

a second insulating film formed on a substantially flat surface, on which a surface of a first wiring and a surface of a first insulating film are continued, to cover the first wiring;

a wiring trench formed in the second insulating film;

a connection hole formed in the second insulating film to extend from the wiring trench to the first wiring;

a dummy connection hole formed in the second insulating film to extend from the wiring trench to a non-forming region of the first wiring; and

a second wiring buried in the connection hole and the wiring trench to be connected electrically to the first wiring and also buried in the dummy connection hole, and formed such that a surface of the second wiring and a surface of the second insulating film constitute a substantially flat surface.

2. A semiconductor device according to claim 1, further comprising a dummy wiring provided in a non-forming region of the first wiring,

wherein the dummy connection hole is formed to reach the dummy wiring.

3. A semiconductor device according to claim 2, wherein a total wiring occupation ratio that incorporates both the first wiring and the dummy wiring is set substantially constant in a plane.

4. A semiconductor device according to claim 1, wherein an interval between neighboring dummy connection holes is set to less than 1 μm.

5. A semiconductor device according to claim 1, wherein an interval between neighboring dummy connection holes is set to less than 0.6 μm.

6. A semiconductor device according to claim 1, wherein an interval between neighboring connection hole and dummy connection hole is set to less than 1 μm.

7. A semiconductor device according to claim 1, wherein an interval between neighboring connection hole and dummy connection hole is set to less than 0.6 μm.

8. A semiconductor device according to claim 1, wherein the second wiring buried in the connection hole, the second wiring buried in the dummy connection hole, and the second wiring buried in the wiring trench are formed integrally.

9. A semiconductor device according to claim 1, wherein the second wiring is arranged in plural in one region, and

in two neighboring second wirings, a part of the connection holes or the dummy connection holes, into which one second wiring is buried, and a part of the connection holes or the dummy connection holes, into which other second wiring is buried, are arranged not to oppose mutually in a direction perpendicular to any one of extending directions of two neighboring second wirings.

10. A semiconductor device according to claim 1, further comprising:

a third insulating film formed on the second wiring to cover the second wiring;

a wiring trench formed in the third insulating film;

a connection hole formed in the third insulating film to extend from the wiring trench in the third insulating film to the second wiring;

a dummy connection hole formed in the third insulating film to extend from the wiring trench in the third insulating film to a non-forming region of the second wiring; and

a third wiring buried in the connection hole and the wiring trench in the third insulating film to be connected electrically to the second wiring and also buried in the dummy connection hole in the third insulating film, and formed such that a surface of the third wiring and a surface of the third insulating film constitute a substantially flat surface;

wherein, if viewed from an upper side of the third wiring, a part of the connection holes or the dummy connection holes, into which the second wiring is buried, and a part of the connection holes or the dummy connection holes, into which the third wiring is buried, are arranged not to oppose mutually in the direction perpendicular to any one of extending directions of the second wiring and the third wiring.

11. A semiconductor device according to claim 1, wherein the second wiring is formed like a solid wiring.

12. A semiconductor device according to claim 11, wherein a plurality of dummy connection holes are provided around the connection hole.

13. A semiconductor device according to claim 1, wherein the second insulating film contains a film that is made of polyarylether material.

14. A semiconductor device according to claim 13, wherein the second insulating film has a lower insulating film in which the connection hole and the dummy connection hole are formed and an upper insulating film in which the wiring trench is formed, and

the upper insulating film contains a film that is formed of the polyarylether material.

15. A semiconductor device according to claim 1, wherein the first wiring or the second wiring contains a copper or an aluminum.

* * * * *