IN THE UNITED STATES DISTRICT COURT
FOR THE WESTERN DISTRICT OF TEXAS
AUSTIN DIVISION

VAMPIRE LABS, LLC, Plaintiff, v. APPLE, INC., Defendant.	CIVIL ACTION NO. 1:24-cv-01377 JURY TRIAL DEMANDED

PLAINTIFF'S ORIGINAL COMPLAINT

Plaintiff Vampire Labs, LLC ("Vampire Labs" or "Plaintiff") hereby files its Original Complaint against Defendant Apple, Inc. ("Defendant" or "Apple"), alleging infringement of U.S. Patent No. 8,358,103 (the "'103 Patent" or "Patent-in-Suit").

I. PARTIES

1. Plaintiff Vampire Labs is a company organized and existing under the laws of Texas. It was founded in Austin, Texas with its principal place of business in Austin.

2. Upon information and belief, Defendant Apple, Inc. is a corporation organized under the laws of the State of California, with its principal places of business located at 1 Infinite Loop, Cupertino, California 95014. Apple, Inc. also has a place of business at 12545 Riata Vista Circle, Austin, Texas 78727. Upon information and belief, Defendant Apple, Inc. is authorized to do business in Texas. Apple, Inc. may be served by serving its registered agent CT Corporation System, 1999 Bryan Street, Suite 900, Dallas, Texas 75201-3136.

Apple Inc. Exhibit 1017 Page 1
Apple Inc. v. Vampire Labs, LLC IPR2025-01215

II. JURISDICTION AND VENUE

3. This is an action for patent infringement which arises under the Patent Laws of the United States, in particular 35 U.S.C. §§ 271, 281, 284 and 285. This Court has jurisdiction over the subject matter of this action under 28 U.S.C. §1331, §1338(a).

4. This Court has personal jurisdiction over Apple for several reasons. Apple maintains regular and established places of business in Texas, including large facilities in Austin. Apple conducts a great deal of business in Texas and has established minimum contacts within the forum such that the exercise of jurisdiction over Apple will not offend traditional notions of fair play and substantial justice. Apple has purposefully and voluntarily availed itself of the privileges of conducting business in the United States, the State of Texas, and this District by continuously and systematically placing goods into the stream of commerce through an established distribution channel with the expectation that they will be purchased by consumers in the State of Texas and this District. Apple directly and/or through intermediaries (including distributors, sales agents, and others), ships, distributes, sells, offers to sell, imports, advertises, makes, and/or uses its products (including but not limited to the products accused of infringement herein) in the United States, the State of Texas, and this District. Finally, Apple has participated in many lawsuits in courts within the State of Texas, including this Court. As such, it has long been established that Apple is subject to personal jurisdiction in Texas. Vampire Labs' causes of action arise from Apple's contacts with and other activities in the State of Texas and this District.

5. Venue is proper in this Court pursuant to 28 U.S.C. §§1391(b), (c), and 1400. Apple maintains regular and established places of business within this district, including at 12545 Riata Vista Circle, Austin, Texas 78727; 12801 Delcour Drive, Austin, Texas 78727; and 3121 Palm 4 Way, Austin, Texas 78758.

6. In addition, Apple has sold, advertised, marketed, and distributed products in this district that practice the claimed inventions of the Patent-in-Suit. Apple derives substantial revenue from the sale of infringing products distributed within the district, and/or expects or should reasonably expect its actions to have consequences within the district and derives substantial revenue from interstate and international commerce.

III. FACTUAL BACKGROUND

VAMPIRE LABS

7. Headquartered in Austin, Texas, Vampire Labs was founded by a team of technological innovators who share a passion for energy conservation and microprocessor design, including Mr. Jeffrey.

8. Vampire Labs drives energy conservation technology within all electronics and has dedicated its intellectual resources to mitigating the global problem associated with vampire energy loss. It has patented key technology for eliminating "Vampire Energy Loss" in mobile device battery chargers, external power supplies, and other internal research and developmental projects.

PATENT-IN-SUIT

9. Vampire Labs is the owner of all right, title, and interest in and to U.S. Patent No. 8,358,103, entitled "Automatic Coupling of an Alternating Current Power Source and an Inductive Power Apparatus to Charge a Target Device Battery," with a claim of priority to July 4, 2008. The '103 Patent duly and legally issued on January 22, 2013.

10. The '103 Patent lapsed due to an unintentional failure to pay maintenance fees. Vampire Labs submitted a Petition to Accept Unintentionally Delayed Payment (37 C.F.R. 1.378(b)) on October 22, 2024. If and when that Petition is granted by the United States Patent &

Trademark Office, Vampire Labs will seek future damages for the remaining life of the ’103 Patent.

TECHNICAL OVERVIEW

11. Many conventional chargers for electronic devices with rechargeable batteries such as computer mice or smartphones require a physical, wired connection between the power supply and the electronic device. Charging continued so long as the AC power source remained active, which would potentially damage the integrity of the battery over time, among other problems.

12. Wireless battery charging, on the other hand, uses electromagnetic induction to transfer power from a charging device to a target battery, for example a smartphone battery. The charging device is typically connected to an AC power source such as a standard outlet from which it draws power that is used to charge the target battery. Commercial applications of wireless inductive charging were introduced in the early 2010s following the Wireless Power Consortium’s (“WPC”) establishment of the first version of the Qi Standard. Wireless charging is now very popular because it provides a number of advantages over traditional wired charging systems, including convenience, durability, and aesthetic factors.

13. One disadvantage of early inductive power charging was the problem of vampiric power loss, which occurs when an inductive charging unit continues to draw AC power even when not needed—for example, when the target battery has been fully charged (or charged up to a desired level). Since charging devices are often left unattended and unmonitored, it is common for the charging unit to remain connected to the target device long after the battery has been charged to the desired level. Thus, these systems would draw—and thereby waste—AC power for extended periods of time. As the ’103 Patent explains:

> The consumption of the vampiric power may continuously occur while the inductive charging unit is coupled to the alternating current power source, and it may occur over the course of an hour, a day, and/or over a longer time

> period. The consumption of the vampiric power may result in an unnecessary generation of power by a power plant. Carbon pollution, nuclear waste, or other forms of pollution and waste may occur as a result of the unnecessary generation of power. In addition, the consumption of the vampiric power may incur a power cost during a peak use period, which may waste a financial resource and/or contribute to causing an insufficient supply of power.

’103 Patent, 1:51-62.

14. The inventor of the ’103 Patent, Jeffrey Eastlack, developed novel solutions to mitigate vampiric power loss in these systems. He patented these inventions in the ’103 Patent and also started a company called Vampire Labs to attempt to commercialize them.

15. The ’103 Patent addresses vampiric power loss through methods and systems that perform automatic coupling of an AC power source and an inductive power apparatus to charge a target device battery while avoiding or at least reducing vampiric power loss. *See* ’103 Patent, Abstract.

16. Figure 14 of the ’103 Patent depicts one embodiment of Eastlack’s inventions:

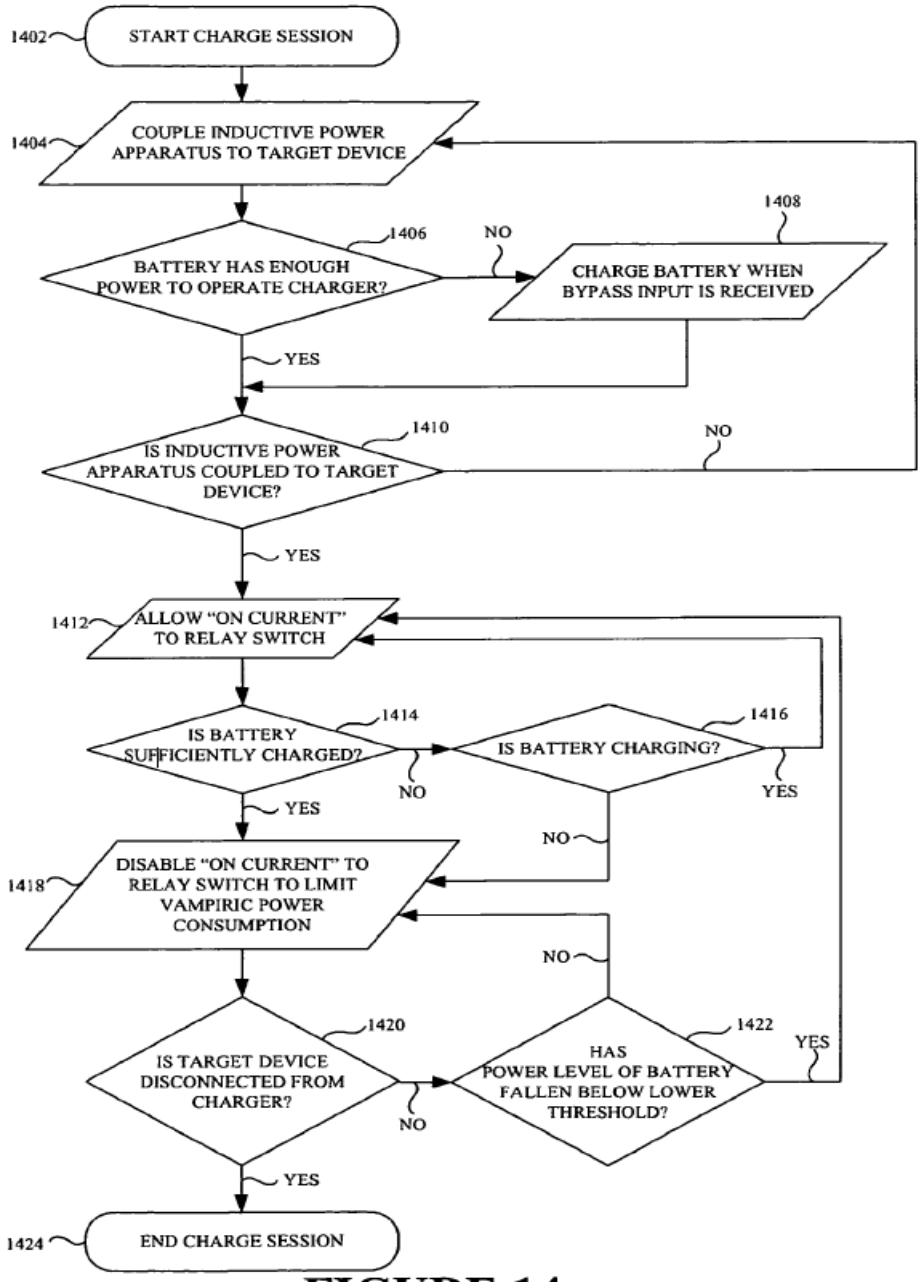

FIGURE 14

17. The claims of the ’103 Patent vary in scope but claim 1 describes a combination of functionality for an inductive battery charging system. The claimed system includes at least one transformer to generate an electric current, a rectification circuit, and a voltage regulation circuit,

and it operates to i) determine when a target device (a device to be charged) is coupled to the inductive power charging system; ii) determine when the target battery is below a threshold (for example, fully charged or 80% charged); iii) automatically couple the inductive power device and the AC power source when the target battery is below the target threshold; and iv) automatically decouple the inductive power apparatus from the AC power source with a relay switch when the target threshold is observed.

18. Figure 9 of the '103 Patent is illustrative:

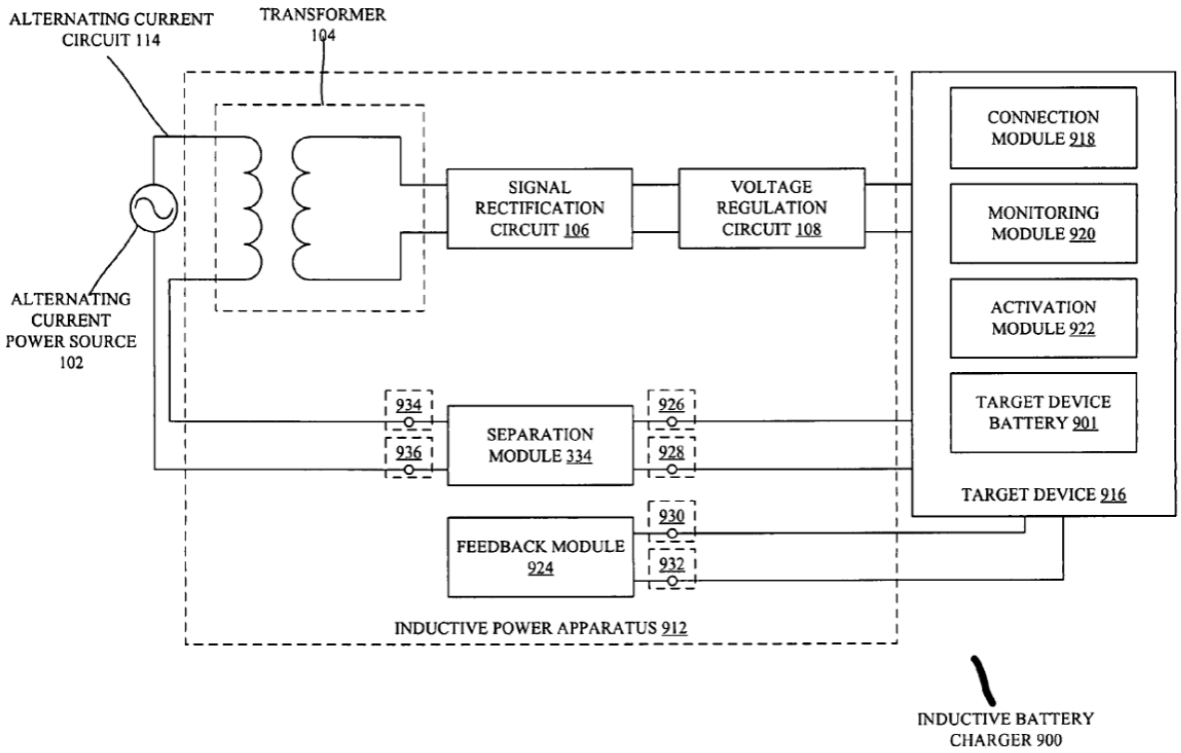

FIGURE 9

19. The Wireless Power Consortium ("WPC") published the Qi low-power specification in August 2009—over a year after the provisional giving rise to the '103 Patent was filed in July 2008.

Defendant's Acts

20. Defendant manufactures, uses, sells, offers to sell, and imports into the United States a variety of consumer electronics products that provide wireless charging in compliance with the WPC Qi Specification (the "Qi Specification"), and that infringe the '103 Patent.[1] Defendant's wireless inductive charging devices that comply with the Qi Specification are referred to herein as the "Accused Systems" and their use to perform the methods claimed in the '103 Patent are referred to herein as the "Accused Methods."

21. For example, Defendant's MagSafe Charger (and accessories) and its iPhones provide for inductive wireless charging in compliance with the Qi Specification. These Accused Systems meet all claim limitations of at least claim 1 of the '103 Patent and thus their manufacture, use, sale, offer for sale, and importation into the United States infringe at least claim 1. An exemplary MagSafe Charger is depicted below.

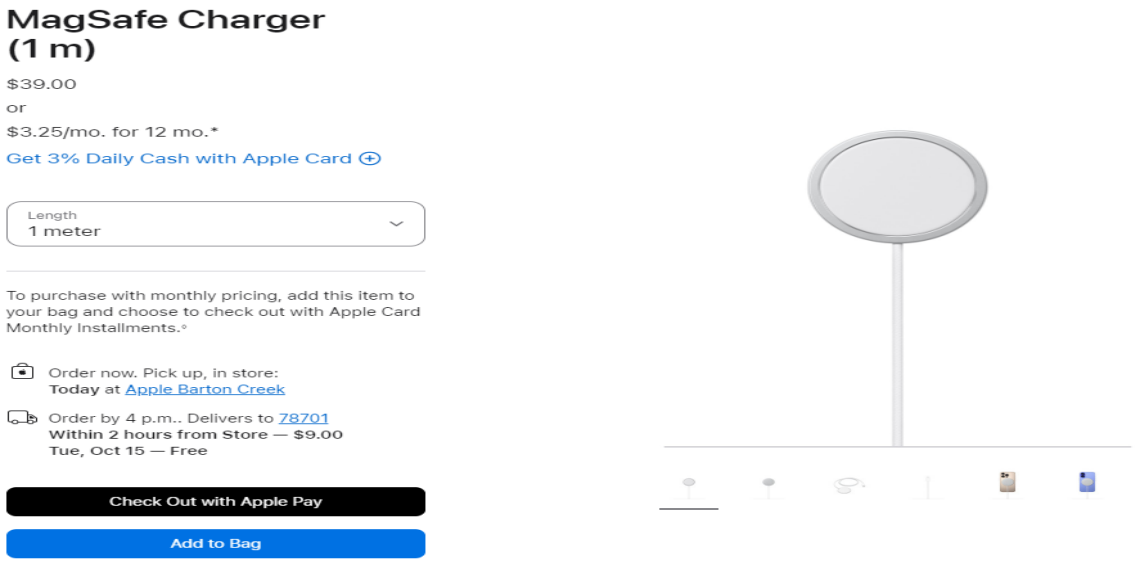

[1] Apple participates in a leadership position at the Wireless Power Consortium ("WPC"). https://www.wirelesspowerconsortium.com/about/leadership-of-wpc-inc.html. During the six-year damages period preceding this suit, the then-current versions of the Qi Specification include versions 1.2.3, 1.3, and 2.0.

22. The Qi Specification is addressed to inductive battery charging systems with one or more transformers, and specifies various states associated with the protocol's phases.

5.1.4 State diagram (informative)

Figure 34 provides a summary of the transitions between the protocol's seven phases.

Figure 34. State diagram

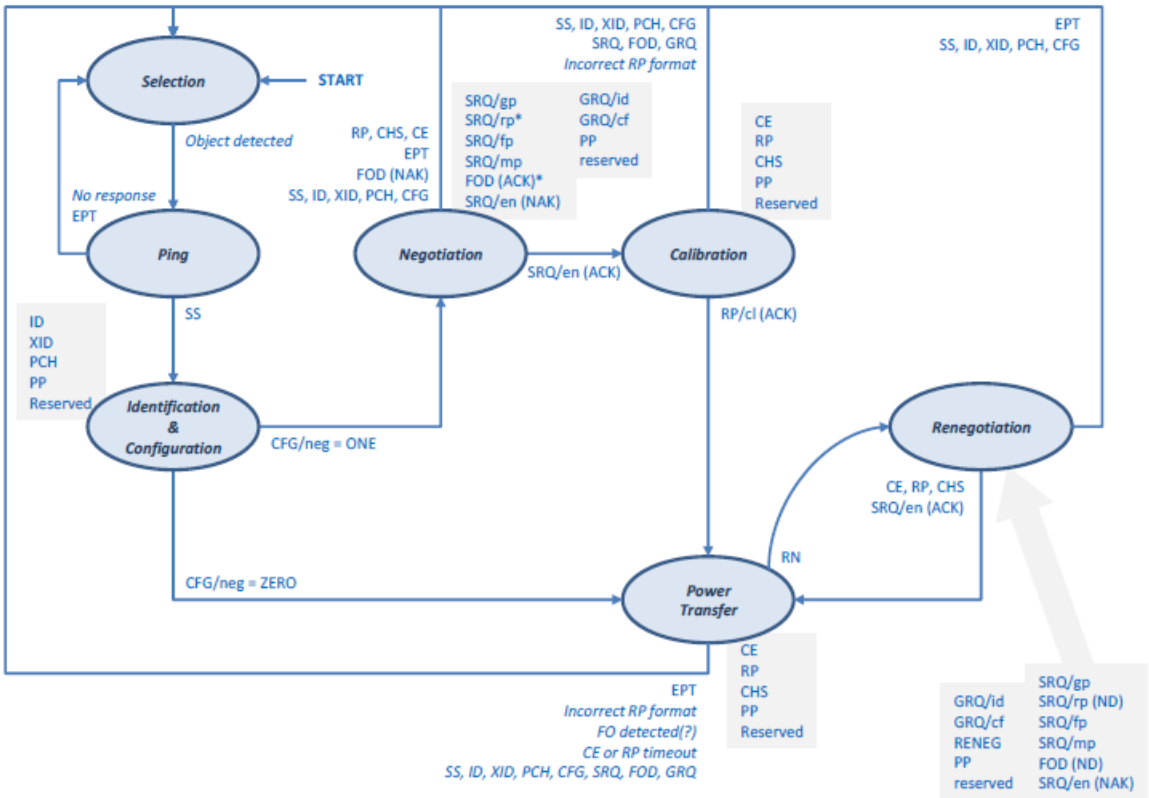

Qi Specification v 1.2.3, p. 85.

23. The Qi Specification further specifies:

(a) functionality for determining when a target device is coupled to an inductive power apparatus, including a ping phase (*see, e.g.*, Qi Specification v 1.3, Comm Protocol, p. 23; Power Delivery, p. 32);

(b) monitoring when a target device battery is below a given threshold (e.g., less than fully charged), including through transmission and receipt of communication packets between the Power Receiver and Power Transmitter (Qi Specification v 1.3, Comm Protocol, pp. 100, 105);

(c) automatically coupling the inductive power apparatus with an AC power source when the target device battery is below the threshold, including through receipt of EPT data packets (Qi Specification v 1.3, Comm Protocol, p. 105); and

(d) using a relay switch to automatically decouple the inductive power apparatus from the AC power source when the target device battery reaches a desired charging state (Qi Specification v 1.3, Comm Protocol, p. 105), including through receipt of EPT data packets and decoupling the primary coil from the AC power to stop current on a primary coil.

24. Defendant also instructs customers and users of the Accused Systems regarding how to use them in a manner that infringes the claims of the ’103 Patent.

25. On information and belief, Defendant also implements contractual controls and protections in the form of license and use restrictions with their customers to preclude the unauthorized reproduction, distribution, and modification of their products.

26. Moreover, on information and belief, Defendant implements technical precautions to attempt to thwart customers who would circumvent the intended operation of Defendant’s products.

IV. PATENT INFRINGEMENT

COUNT I — INFRINGEMENT OF U.S. PATENT NO. 8,358,103

27. Vampire Labs incorporates by reference the foregoing paragraphs 1-26 as if fully set forth herein.

28. Apple has directly infringed at least claim 1 of the '103 Patent in this judicial district and elsewhere in the United States by, among other things, making, having made, importing, using, offering for sale, and/or selling without authority or license the claimed system and methods of the '103 Patent.

29. The infringing products include the Accused Systems – i.e., Apple's inductive charging products that comply with the Qi Specification, including, but not limited to, Apple's MagSafe Charger, iPhones and similar devices, and Apple's accessories/wearables, including the Apple Watch line of products. Vampire Labs alleges that each and every element is literally present in the Accused Systems. To the extent not literally present, Vampire Labs reserves the right to proceed under the doctrine of equivalents.

30. Apple's Accused Systems provide optimized battery charging for iPhones and other products through an inductive battery charging system.

About Optimized Battery Charging on your iPhone

With iOS 13 and later, your iPhone learns from your daily charging habits to improve the lifespan of your battery.

A battery's lifespan is related to its chemical age, which is more than just the length of time since the battery was assembled. A battery's chemical age results from a complex combination of several factors, including temperature history and charging pattern. All rechargeable batteries are consumable components that become less effective as they chemically age. As lithium-ion batteries chemically age, the amount of charge they can hold diminishes, resulting in reduced battery life and reduced peak performance. Learn more about iPhone battery and performance and how to maximize battery performance and lifespan.

With iOS 13 and later, Optimized Battery Charging is designed to reduce the wear on your battery and improve its lifespan by reducing the time your iPhone spends fully charged. When the feature is enabled, your iPhone will delay charging past 80% in certain situations. Your iPhone uses on-device machine learning to learn your daily charging routine so that Optimized Battery Charging activates only when your iPhone predicts it will be connected to a charger for an extended period of time. The algorithm aims to ensure that your iPhone is still fully charged when unplugged.

When Optimized Battery Charging is active, a notification on the Lock Screen says when your iPhone will be fully charged. If you need to have your iPhone fully charged sooner, touch and hold the notification and then tap Charge Now.

https://support.apple.com/en-us/108055

Get up to 15W faster wireless charging

The MagSafe Charger is designed to quickly and safely wirelessly charge your iPhone. The system intelligently adapts to conditions to optimize charging your iPhone at up to 15W of peak power delivery for faster wireless charging. The actual power delivered to the iPhone will vary depending on the wattage of the power adapter and system conditions. For iPhone 13 mini and iPhone 12 mini, the MagSafe Charger delivers up to 12W of peak power delivery.

It's important to plug into a power source before placing your iPhone on the MagSafe Charger. This allows MagSafe to verify it's safe to deliver maximum power. If you happen to place your iPhone on the MagSafe Charger before plugging into a power source, simply remove your iPhone from the MagSafe Charger, wait three seconds, and then put it back on to resume maximum power delivery.

The MagSafe Charger is designed to negotiate the max power up to 9 volt (V) and 3 amp (A) with a USB PD-compatible power adapter. MagSafe will dynamically optimize power delivered to the iPhone. The power delivered to your iPhone at any moment will vary depending on various factors, including temperature and system activity.

All power adapters have different ratings for amount and rate of power delivery. The MagSafe Charger requires the following ratings to deliver faster wireless charging.

https://support.apple.com/en-us/105047

31. Apple's Accused Systems are inductive battery charging systems that have a connection module to determine when a target device is coupled to an inductive power apparatus; a monitoring module to determine when a target device battery is below a charging threshold while using power from a supplemental power source; an activation module to automatically couple the inductive power apparatus and an alternating current power source when a power level of the target device battery is below the charging threshold; a separation module to automatically decouple the inductive power apparatus and the alternating current power source when a desired charging state of the target device battery is observed, wherein the separation module is comprised of a relay switch, wherein the inductive power apparatus includes at least one of a transformer to inductively generate an electric current, a rectification circuit, and a voltage regulation circuit.

32. Functional block diagrams of Power Transmitters in accordance with the Qi Specification are shown below.

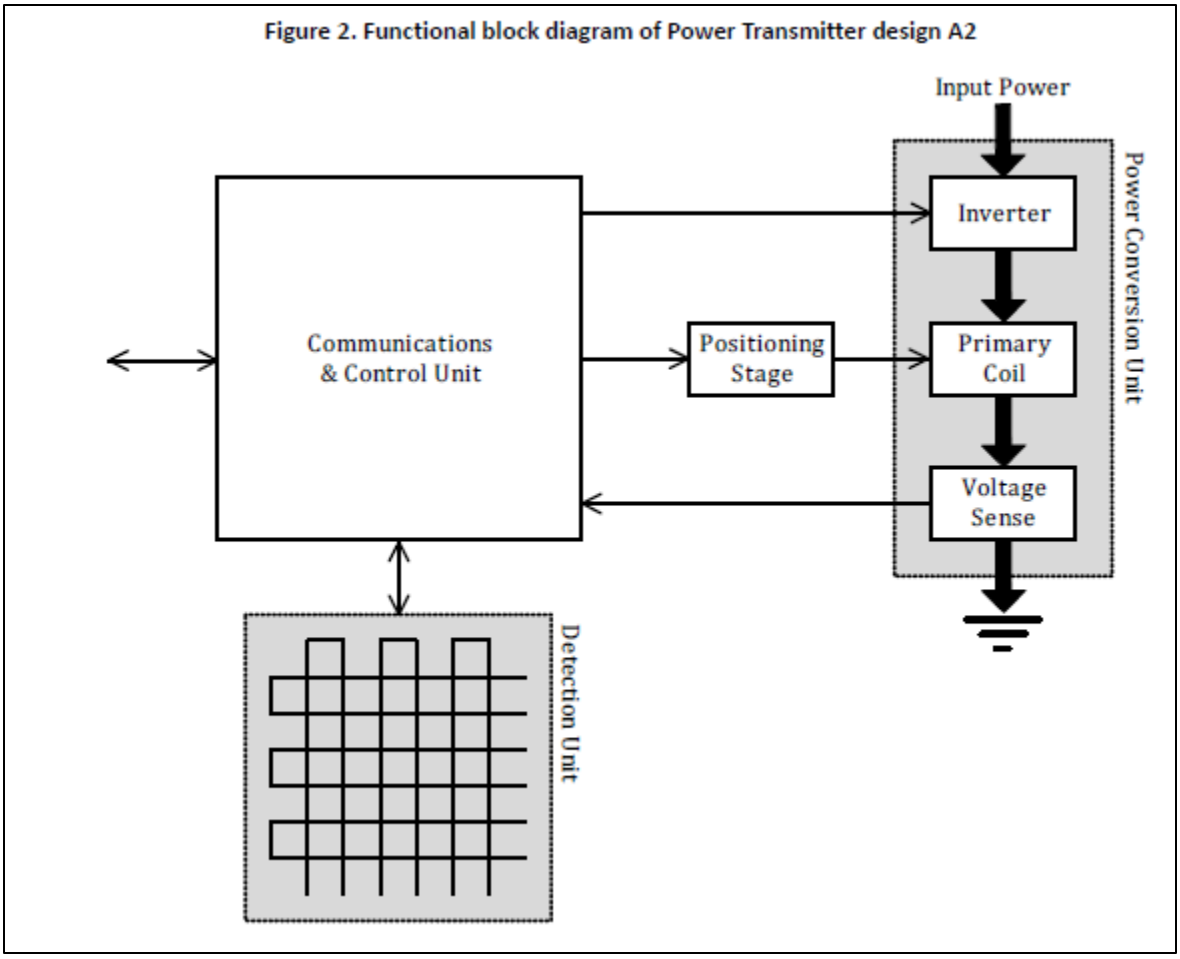

Qi Specification v 1.3, Power Ref Designs, p. 23.

33. Vampire Labs has been damaged as a result of Apple's infringing conduct. Apple is thus liable to Vampire Labs in an amount that adequately compensates it for Apple's infringements, which, by law, cannot be less than a reasonable royalty, together with interest and costs as fixed by this Court under 35 U.S.C. § 284.

V. JURY DEMAND

34. Vampire Labs demands a trial by jury of all matters to which it is entitled to trial by jury, pursuant to FED. R. CIV. P. 38 and the United States Constitution.

VI. PRAYER FOR RELIEF

35. WHEREFORE, Plaintiff Vampire Labs prays for judgment and seeks relief against Defendant as follows:

a. Judgment that one or more claims of the ’103 Patent have been directly infringed, either literally and/or under the doctrine of equivalents;

b. Award Plaintiff past and future damages together with prejudgment and post-judgment interest to compensate for the infringement by Apple of the ’103 Patent in accordance with 35 U.S.C. § 284, and increase such award by up to three times the amount found or assessed in accordance with 35 U.S.C. § 284;

c. That the Court declare this an exceptional case and award Plaintiff its reasonable attorneys’ fees and costs in accordance with 35 U.S.C. § 285; and

d. That Plaintiff be granted such other and further relief as the Court may deem just and proper under the circumstances.

Dated: November 12, 2024

Respectfully submitted,

/s/ Andrew G. DiNovo
Andrew G. DiNovo
Texas State Bar No. 00790594
Gregory S. Donahue
Texas State Bar No. 24012539
Michael D. French
Texas State Bar No. 24116392
DiNovo Price LLP
7000 N. MoPac Expressway, Suite 350
Austin, Texas 78731
Telephone: (512) 539-2626
Telecopier: (512) 727-6691
adinovo@dinovoprice.com
gdonahue@dinovoprice.com
mfrench@dinovoprice.com

Scott L. Cole
Texas State Bar No. 00790481
SLC TRIAL LAW, PLLC
5209 Spanish Oaks Club Blvd.
Austin, Texas 78738
Telephone: (512) 201-8505
scott@slc-trial.com

ATTORNEYS FOR PLAINTIFF
VAMPIRE LABS, LLC