US010148414B2

(12) **United States Patent**
Lugthart et al.

(10) **Patent No.: US 10,148,414 B2**
(45) **Date of Patent: Dec. 4, 2018**

(54) **DESKEW IN A HIGH SPEED LINK**

(71) Applicant: **INPHI CORPORATION**, Santa Clara, CA (US)

(72) Inventors: **Marcel Louis Lugthart**, Laguna Hills, CA (US); **Jeffrey Zachan**, Newport Beach, CA (US); **Linghsiao Jerry Wang**, Irvine, CA (US)

(73) Assignee: **INPHI CORPORATION**, Santa Clara, CA (US)

(*) Notice: Subject to any disclaimer, the term of this patent is extended or adjusted under 35 U.S.C. 154(b) by 0 days.

(21) Appl. No.: **15/639,741**

(22) Filed: **Jun. 30, 2017**

(65) **Prior Publication Data**

US 2017/0302431 A1 Oct. 19, 2017

Related U.S. Application Data

(63) Continuation of application No. 15/172,595, filed on Jun. 3, 2016, now Pat. No. 9,742,550, which is a

(Continued)

(51) **Int. Cl.**
H04L 7/00 (2006.01)
H04L 7/033 (2006.01)

(Continued)

(52) **U.S. Cl.**
CPC ***H04L 7/0037*** (2013.01); ***H03M 5/12*** (2013.01); ***H04B 1/40*** (2013.01); ***H04L 5/14*** (2013.01); ***H04L 7/0016*** (2013.01); ***H04L 7/0054*** (2013.01); ***H04L 7/0062*** (2013.01); ***H04L 7/0087*** (2013.01); ***H04L 7/033*** (2013.01); ***H04L 25/03*** (2013.01); ***H04L 25/03006*** (2013.01);

(Continued)

(58) **Field of Classification Search**
CPC H04L 7/0016; H04L 7/0054; H04L 25/14; H04L 7/0062
See application file for complete search history.

(56) **References Cited**

U.S. PATENT DOCUMENTS

6,215,793 B1 4/2001 Gultekin et al.
6,603,754 B1 8/2003 Park

(Continued)

FOREIGN PATENT DOCUMENTS

KR 10-2011-0094839 8/2011

OTHER PUBLICATIONS

Sakurai et al. Development of High-Speed 10-Gb/s Interface Cable "Thunderbolt Cable", SEI Technical Review, Oct. 2012, No. 75, pp. 120-124.

(Continued)

Primary Examiner — Jean B Corrielus
(74) *Attorney, Agent, or Firm* — Richard T. Ogawa; Ogawa P.C.

(57) **ABSTRACT**

Systems and methods for high speed communications are described herein. In certain aspects, the systems and methods include innovative transceiver architectures and techniques for re-timing, multiplexing, de-multiplexing and transmitting data. The systems and methods can be used to achieve reliable high-speed point-to-point communication between different electronic devices, computing devices, storage devices and peripheral devices.

20 Claims, 24 Drawing Sheets

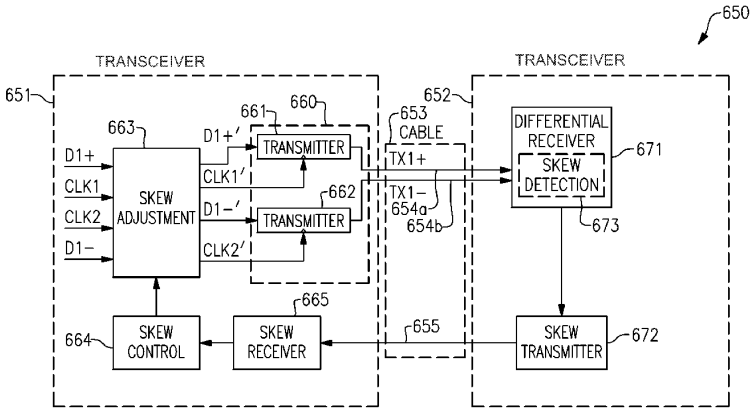

Related U.S. Application Data

continuation of application No. 14/581,979, filed on Dec. 23, 2014, now Pat. No. 9,379,878.

(60) Provisional application No. 61/982,233, filed on Apr. 21, 2014, provisional application No. 61/927,404, filed on Jan. 14, 2014, provisional application No. 61/921,360, filed on Dec. 27, 2013.

(51) **Int. Cl.**

H04L 25/03	(2006.01)
H04L 25/14	(2006.01)
H04B 1/40	(2015.01)
H04L 5/14	(2006.01)
H04L 27/38	(2006.01)
H03M 5/12	(2006.01)
H04L 27/02	(2006.01)
H04L 12/911	(2013.01)
H04L 7/02	(2006.01)

(52) **U.S. Cl.**

CPC ***H04L 25/14*** (2013.01); ***H04L 27/02*** (2013.01); ***H04L 27/38*** (2013.01); ***H04L 47/70*** (2013.01); *H04L 7/02* (2013.01)

(56) **References Cited**

U.S. PATENT DOCUMENTS

6,791,370	B1 *	9/2004	Morzano	H03K 5/151 327/55
7,095,803	B2	8/2006	Gazsi et al.	
7,650,526	B2	1/2010	Alon et al.	
8,013,653	B2	9/2011	Huang	
8,108,710	B2	1/2012	Zabinski	
8,335,291	B2 *	12/2012	Bae	H03K 19/0966 375/219
8,351,559	B1	1/2013	Thomas	
8,451,883	B1	5/2013	Ding et al.	
8,494,038	B2	7/2013	Gruendler et al.	
8,532,139	B2	9/2013	Diab et al.	
8,736,321	B2	5/2014	Nishiyama et al.	
8,855,179	B1	10/2014	Saed	
9,337,993	B1	5/2016	Lugthart et al.	
9,379,878	B1	6/2016	Lugthart et al.	
9,571,308	B1	2/2017	Lugthart et al.	
2003/0048858	A1	3/2003	Gazsi et al.	
2004/0139220	A1	7/2004	Conley et al.	
2006/0023825	A1 *	2/2006	Kato	G06F 13/4273 375/372
2006/0244505	A1	11/2006	Fung et al.	
2007/0006053	A1 *	1/2007	Otto	H04L 25/14 714/700
2007/0046335	A1	3/2007	Becker et al.	
2007/0136621	A1 *	6/2007	Alon	G06F 1/10 713/503
2007/0157048	A1 *	7/2007	Levin	G06F 13/4077 713/400
2007/0195911	A1	8/2007	Ochi	
2007/0252631	A1	11/2007	Kaviani et al.	
2008/0175586	A1	7/2008	Perkins et al.	
2008/0304608	A1	12/2008	Ishida	
2009/0154467	A1	6/2009	Diab	
2009/0184743	A1 *	7/2009	Kim	G06F 1/10 327/161
2010/0060496	A1 *	3/2010	Madisetti	H03M 1/0624 341/118
2010/0258952	A1	10/2010	Fjelstad	
2011/0293041	A1 *	12/2011	Luo	H04L 5/20 375/316
2011/0299858	A1	12/2011	Mazzini et al.	
2012/0082466	A1	4/2012	Wu et al.	
2012/1015552		6/2012	Gruendler et al.	
2013/0229211	A1	9/2013	Nishiyama et al.	
2014/0043079	A1	2/2014	Ebuchi et al.	
2014/0176208	A1 *	6/2014	Yamaguchi	H04L 7/00 327/158
2014/0191788	A1	7/2014	Song et al.	
2014/0362869	A1	12/2014	Pan et al.	
2015/0028929	A1	1/2015	Farmer et al.	
2015/0071651	A1	3/2015	Asmanis et al.	

OTHER PUBLICATIONS

Futamata et al. Micro Coaxial Cable Assembly, Fujikura Technical Review, 2002, pp. 1-6.

Palermo, Lecture 9: Modulation Schemes, Spring 2010, Analog & Mixed-Signal Center, Texas A&M University in 18 pages.

* cited by examiner

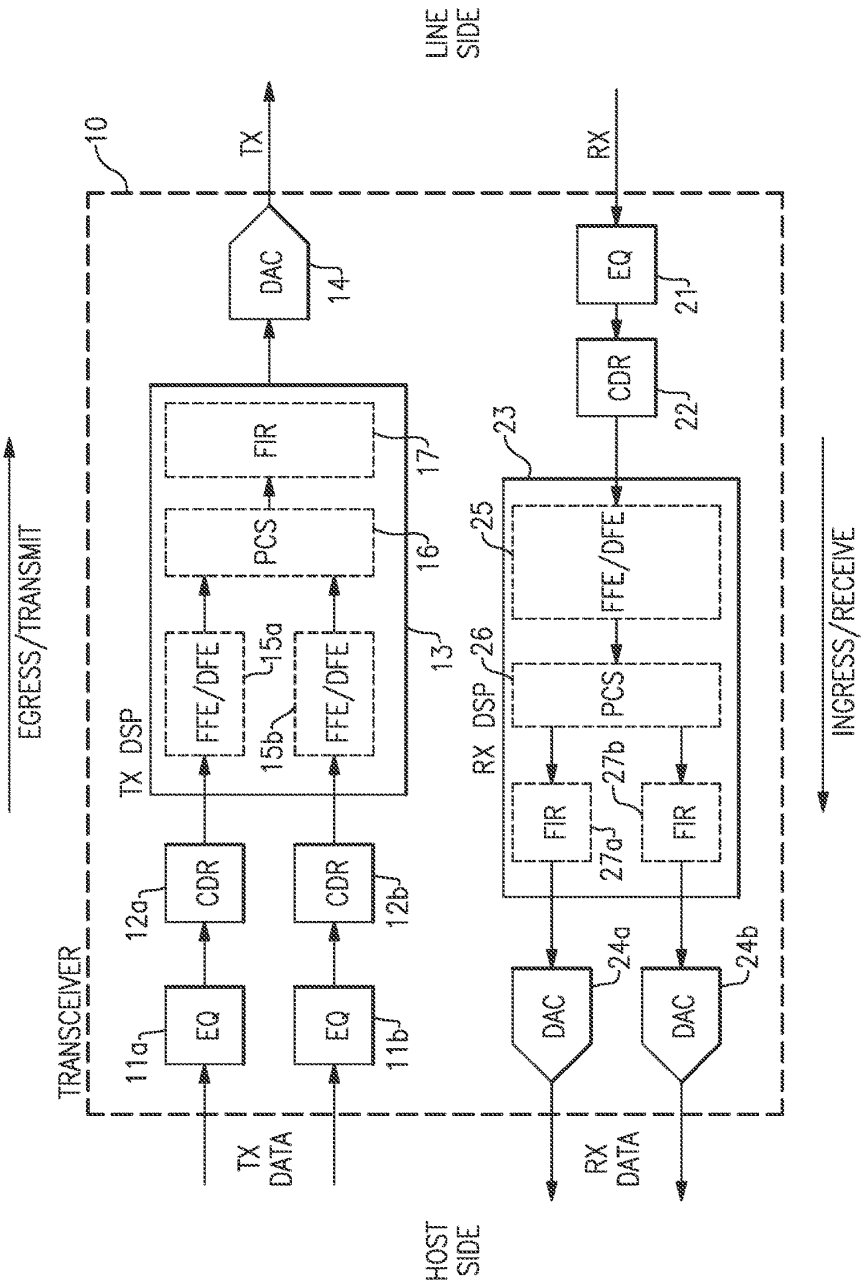
LINE SIDE
10
TX
RX
DAC
14
EQ
21
CDR
22
23
FIR
17
PCS
16
FFE/DFE
15a
15b
13
TX DSP
25
FFE/DFE
26
PCS
RX DSP
FIR
27a
27b
FIR
EGRESS/TRANSMIT
INGRESS/RECEIVE
TRANSCEIVER
CDR
12a
CDR
12b
EQ
11a
EQ
11b
DAC
24a
DAC
24b
TX DATA
RX DATA
HOST SIDE

FIG.1A

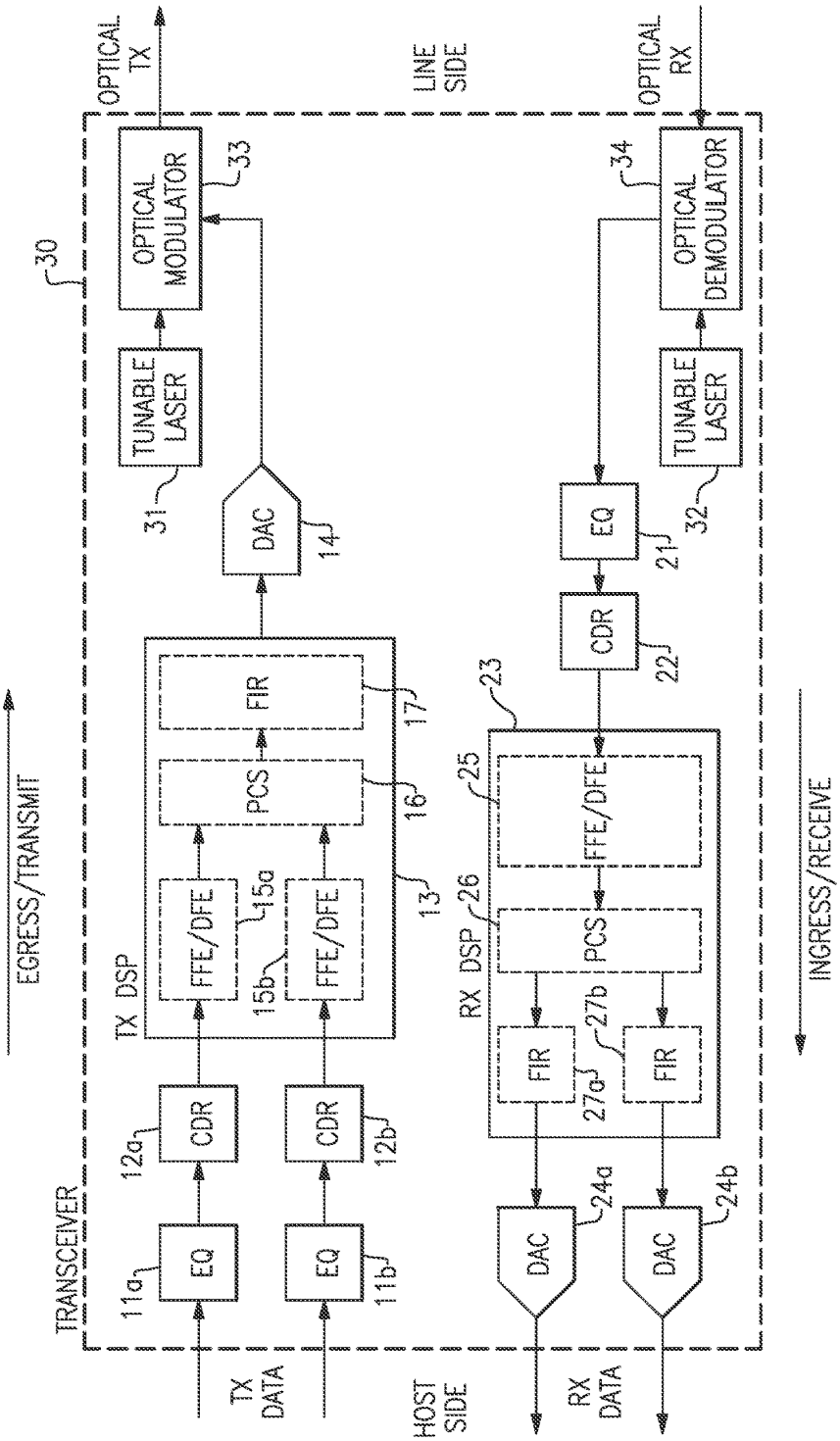
EGRESS/TRANSMIT
INGRESS/RECEIVE
TRANSCEIVER
30
TX DATA
HOST SIDE
RX DATA
LINE SIDE
OPTICAL TX
OPTICAL RX
EQ
11a
EQ
11b
CDR
12a
CDR
12b
TX DSP
13
FFE/DFE
15a
FFE/DFE
15b
PCS
16
FIR
17
DAC
14
TUNABLE LASER
31
OPTICAL MODULATOR
33
DAC
24a
DAC
24b
RX DSP
26
FIR
27a
PCS
27b
FIR
FFE/DFE
25
23
CDR
22
EQ
21
TUNABLE LASER
32
OPTICAL DEMODULATOR
34

FIG. 1B

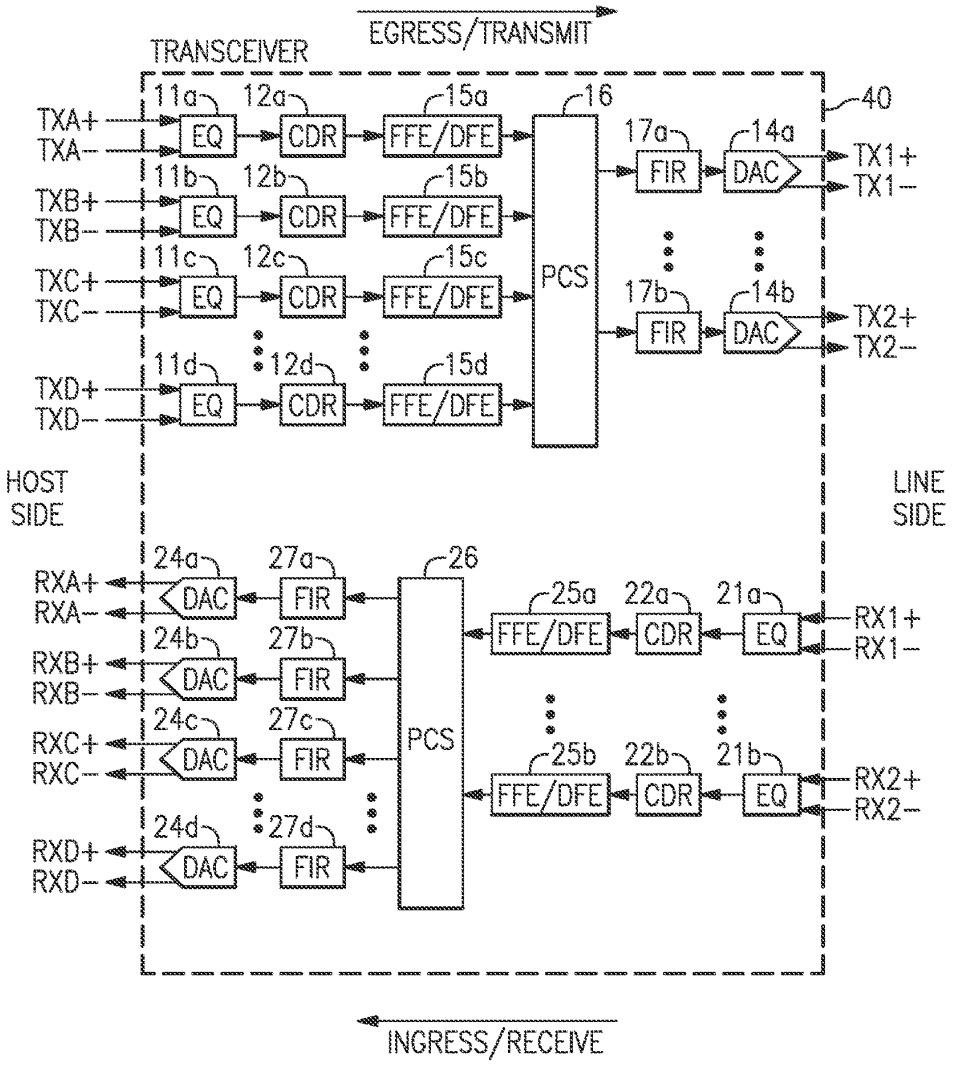
EGRESS/TRANSMIT
TRANSCEIVER
40
TXA+
TXA−
TXB+
TXB−
TXC+
TXC−
TXD+
TXD−
11a
11b
11c
11d
EQ
12a
12b
12c
12d
CDR
15a
15b
15c
15d
FFE/DFE
16
PCS
17a
17b
FIR
14a
14b
DAC
TX1+
TX1−
TX2+
TX2−
HOST SIDE
LINE SIDE
RXA+
RXA−
RXB+
RXB−
RXC+
RXC−
RXD+
RXD−
24a
24b
24c
24d
27a
27b
27c
27d
26
25a
25b
22a
22b
21a
21b
RX1+
RX1−
RX2+
RX2−
INGRESS/RECEIVE

FIG.1C

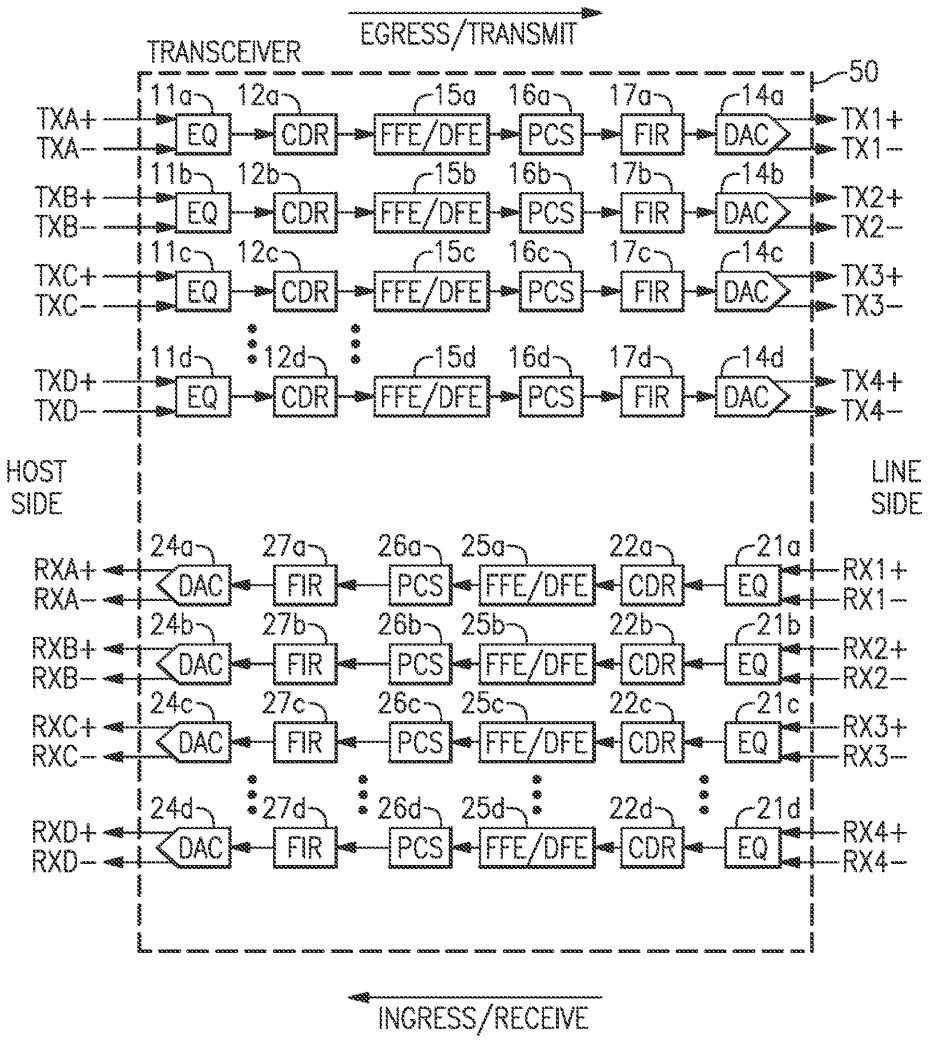
EGRESS/TRANSMIT
TRANSCEIVER
50
TXA+
TXA−
TXB+
TXB−
TXC+
TXC−
TXD+
TXD−
11a
12a
15a
16a
17a
14a
11b
12b
15b
16b
17b
14b
11c
12c
15c
16c
17c
14c
11d
12d
15d
16d
17d
14d
EQ
CDR
FFE/DFE
PCS
FIR
DAC
TX1+
TX1−
TX2+
TX2−
TX3+
TX3−
TX4+
TX4−
HOST SIDE
LINE SIDE
RXA+
RXA−
RXB+
RXB−
RXC+
RXC−
RXD+
RXD−
24a
27a
26a
25a
22a
21a
24b
27b
26b
25b
22b
21b
24c
27c
26c
25c
22c
21c
24d
27d
26d
25d
22d
21d
RX1+
RX1−
RX2+
RX2−
RX3+
RX3−
RX4+
RX4−
INGRESS/RECEIVE

FIG.1D

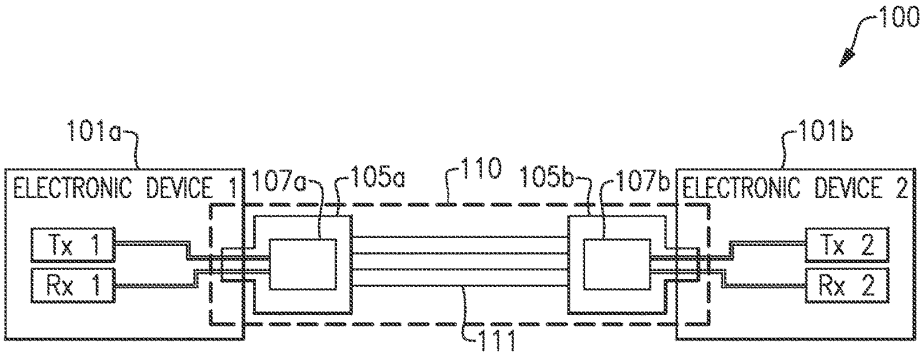
100
101a
101b
ELECTRONIC DEVICE 1
107a
105a
110
105b
107b
ELECTRONIC DEVICE 2
Tx 1
Rx 1
Tx 2
Rx 2
111

FIG.2A

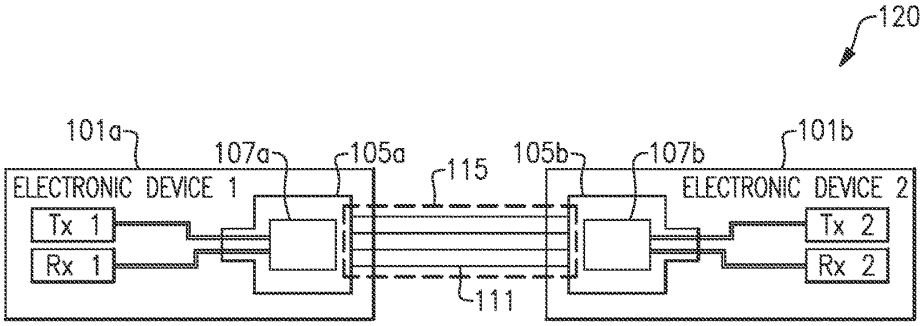
120
101a
107a
105a
115
105b
107b
101b
ELECTRONIC DEVICE 1
ELECTRONIC DEVICE 2
Tx 1
Rx 1
Tx 2
Rx 2
111

FIG.2B

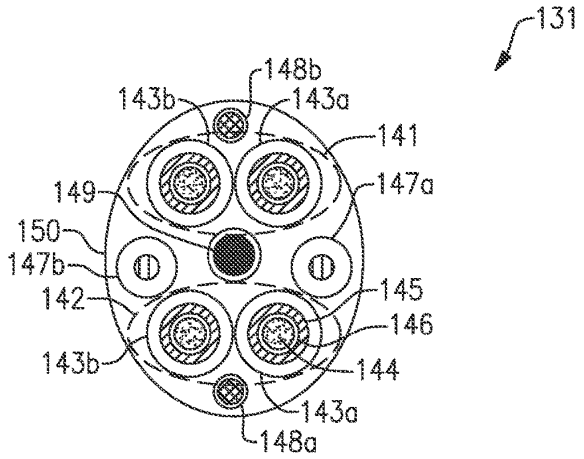

FIG.3A

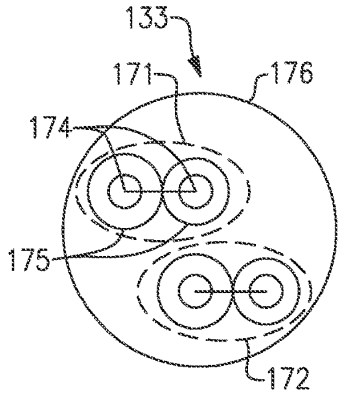

FIG.3C

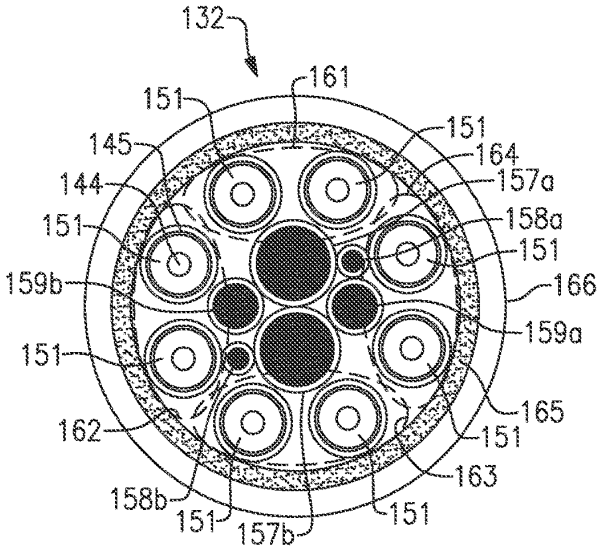

FIG.3B

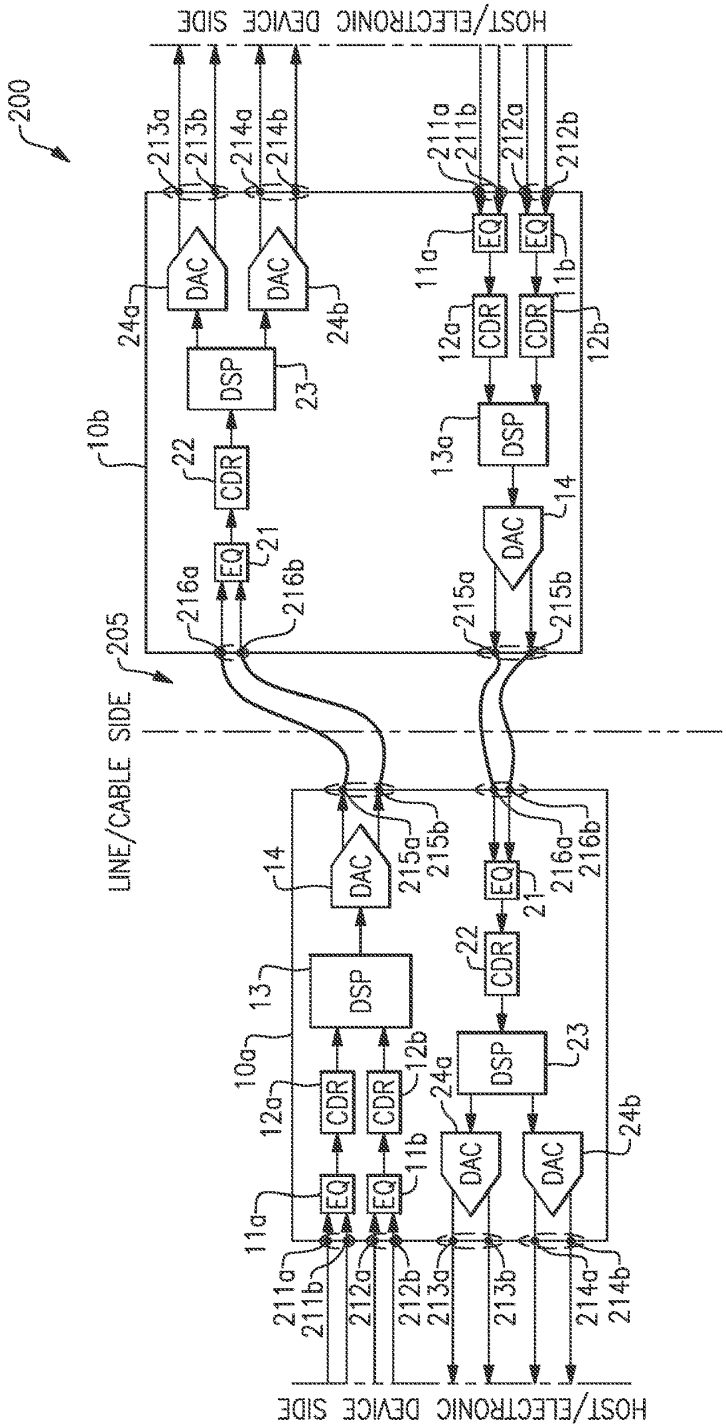
200
HOST/ELECTRONIC DEVICE SIDE
LINE/CABLE SIDE
205
10a
10b
DAC
DSP
CDR
EQ
11a
11b
12a
12b
13
13a
14
21
22
23
24a
24b
211a
211b
212a
212b
213a
213b
214a
214b
215a
215b
216a
216b

FIG.4A

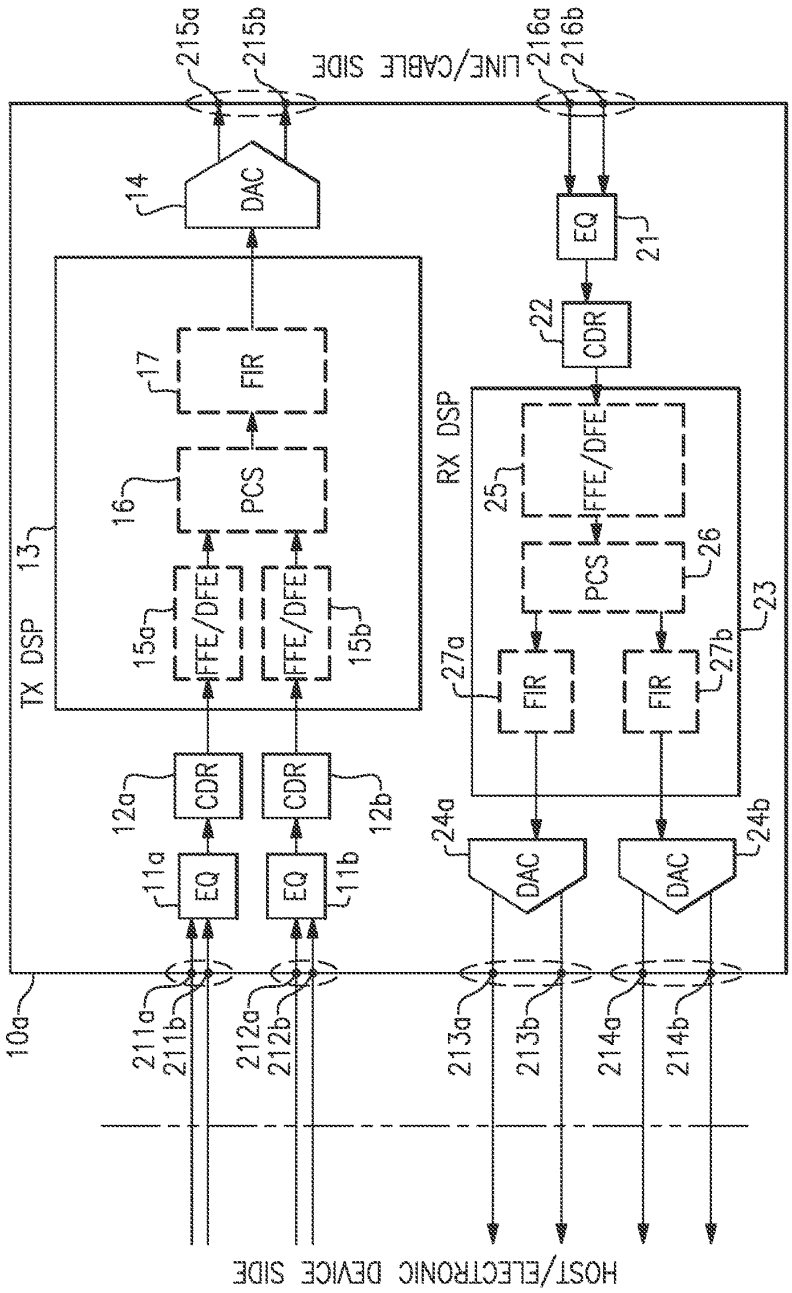
10a
TX DSP
13
EQ
11a
EQ
11b
CDR
12a
CDR
12b
FFE/DFE
15a
FFE/DFE
15b
PCS
16
FIR
17
DAC
14
215a
215b
LINE/CABLE SIDE
216a
216b
EQ
21
CDR
22
RX DSP
23
FFE/DFE
25
PCS
26
FIR
27a
FIR
27b
DAC
24a
DAC
24b
211a
211b
212a
212b
213a
213b
214a
214b
HOST/ELECTRONIC DEVICE SIDE

FIG.4B

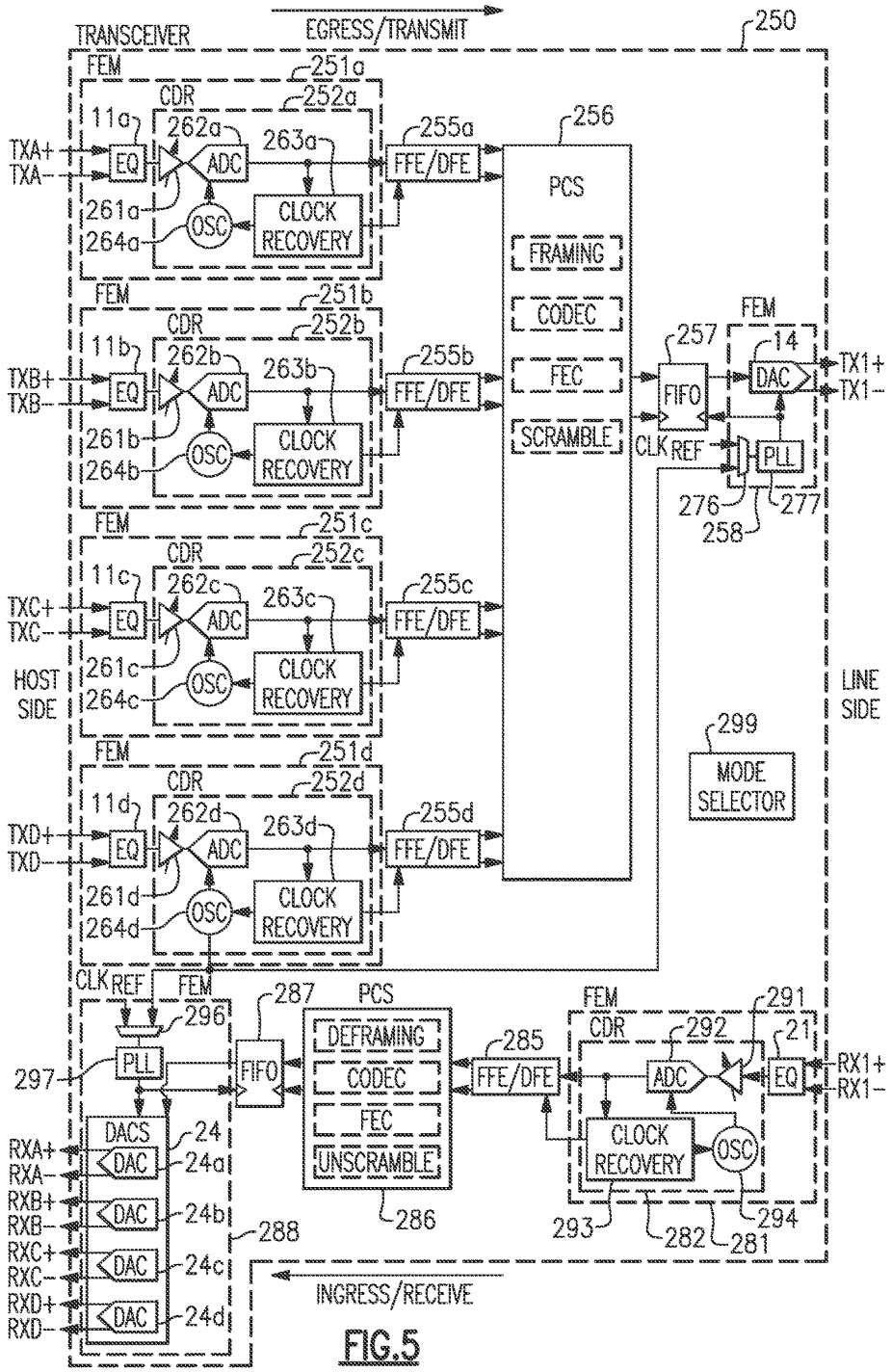
TRANSCEIVER
EGRESS/TRANSMIT
250
FEM
251a
CDR
252a
11a
262a
263a
255a
256
TXA+
TXA−
EQ
ADC
FFE/DFE
PCS
261a
264a
OSC
CLOCK RECOVERY
FRAMING
FEM
251b
CDR
252b
CODEC
11b
262b
263b
255b
257
FEM
14
TXB+
TXB−
EQ
ADC
FFE/DFE
FEC
FIFO
DAC
TX1+
TX1−
261b
264b
OSC
CLOCK RECOVERY
SCRAMBLE
CLK REF
PLL
276
277
258
FEM
251c
CDR
252c
11c
262c
263c
255c
TXC+
TXC−
EQ
ADC
FFE/DFE
261c
264c
OSC
CLOCK RECOVERY
HOST SIDE
LINE SIDE
299
MODE SELECTOR
FEM
251d
CDR
252d
11d
262d
263d
255d
TXD+
TXD−
EQ
ADC
FFE/DFE
261d
264d
OSC
CLOCK RECOVERY
CLK REF
FEM
296
287
PCS
FEM
291
CDR
292
21
297
PLL
FIFO
DEFRAMING
285
CODEC
FFE/DFE
ADC
EQ
RX1+
RX1−
FEC
DACS
24
UNSCRAMBLE
CLOCK RECOVERY
OSC
RXA+
RXA−
DAC
24a
RXB+
RXB−
DAC
24b
286
293
282
281
294
288
RXC+
RXC−
DAC
24c
RXD+
RXD−
DAC
24d
INGRESS/RECEIVE

FIG.5

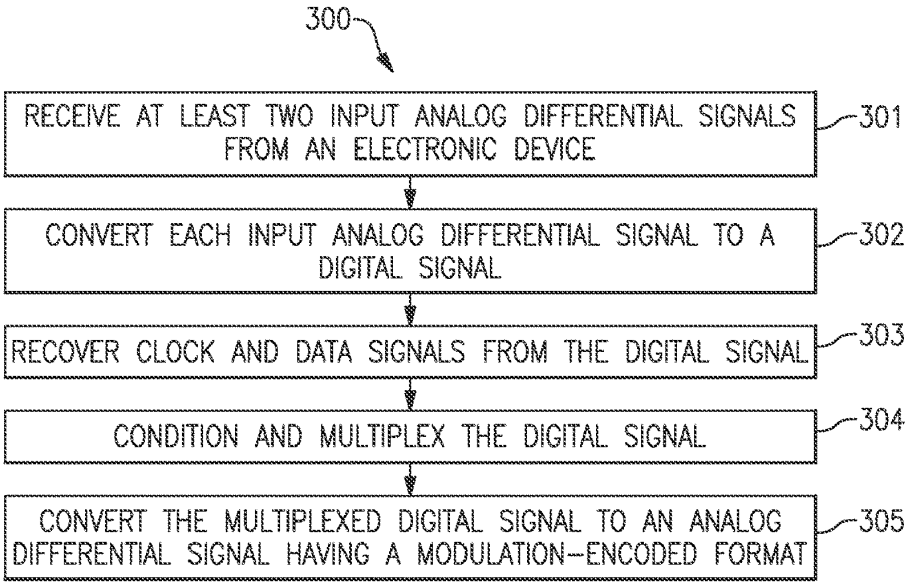
300
RECEIVE AT LEAST TWO INPUT ANALOG DIFFERENTIAL SIGNALS FROM AN ELECTRONIC DEVICE
301
CONVERT EACH INPUT ANALOG DIFFERENTIAL SIGNAL TO A DIGITAL SIGNAL
302
RECOVER CLOCK AND DATA SIGNALS FROM THE DIGITAL SIGNAL
303
CONDITION AND MULTIPLEX THE DIGITAL SIGNAL
304
CONVERT THE MULTIPLEXED DIGITAL SIGNAL TO AN ANALOG DIFFERENTIAL SIGNAL HAVING A MODULATION-ENCODED FORMAT
305

FIG.6A

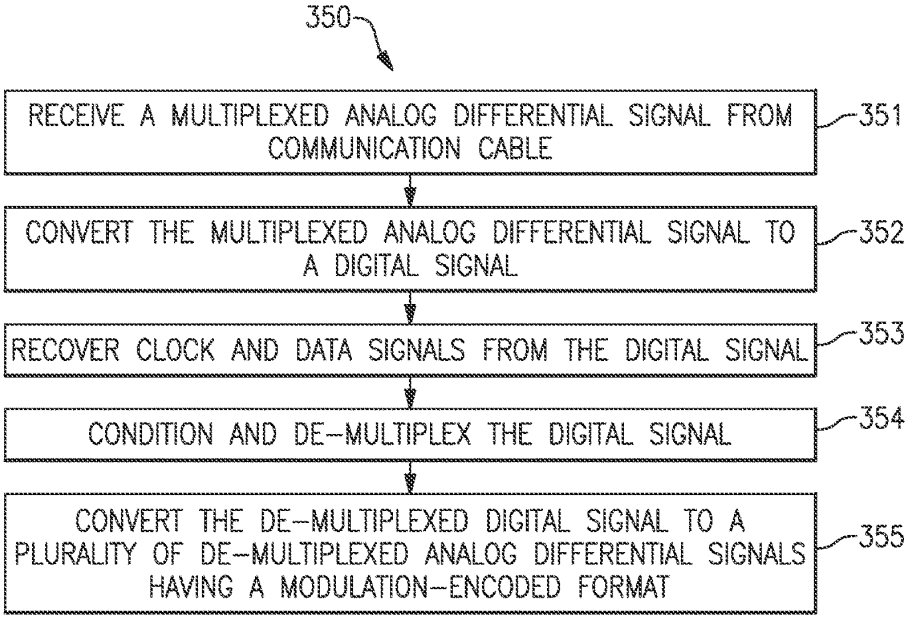
350
RECEIVE A MULTIPLEXED ANALOG DIFFERENTIAL SIGNAL FROM COMMUNICATION CABLE
351
CONVERT THE MULTIPLEXED ANALOG DIFFERENTIAL SIGNAL TO A DIGITAL SIGNAL
352
RECOVER CLOCK AND DATA SIGNALS FROM THE DIGITAL SIGNAL
353
CONDITION AND DE-MULTIPLEX THE DIGITAL SIGNAL
354
CONVERT THE DE-MULTIPLEXED DIGITAL SIGNAL TO A PLURALITY OF DE-MULTIPLEXED ANALOG DIFFERENTIAL SIGNALS HAVING A MODULATION-ENCODED FORMAT
355

FIG.6B

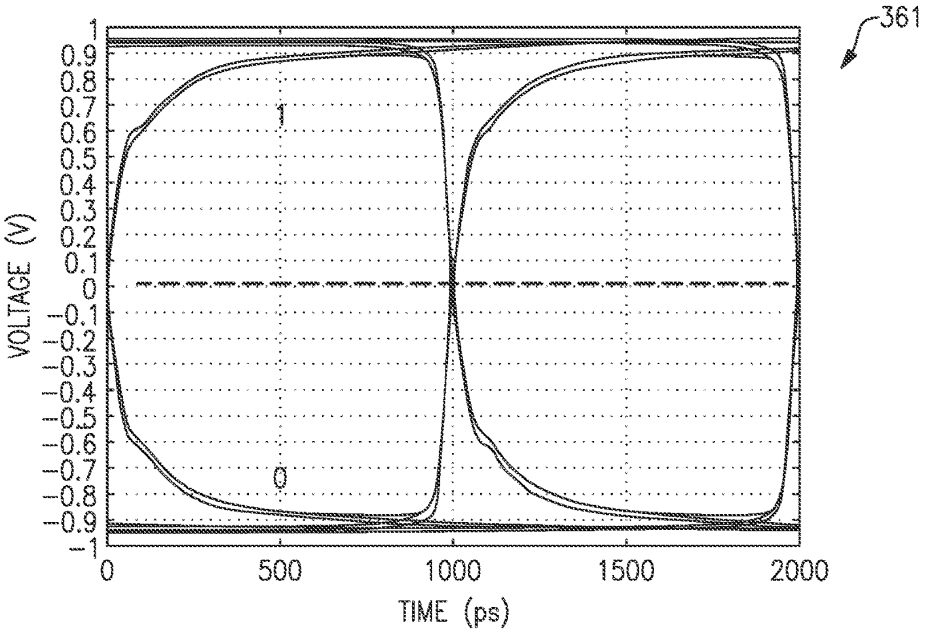
361
VOLTAGE (V)
TIME (ps)
1
0
0
500
1000
1500
2000

FIG.7A

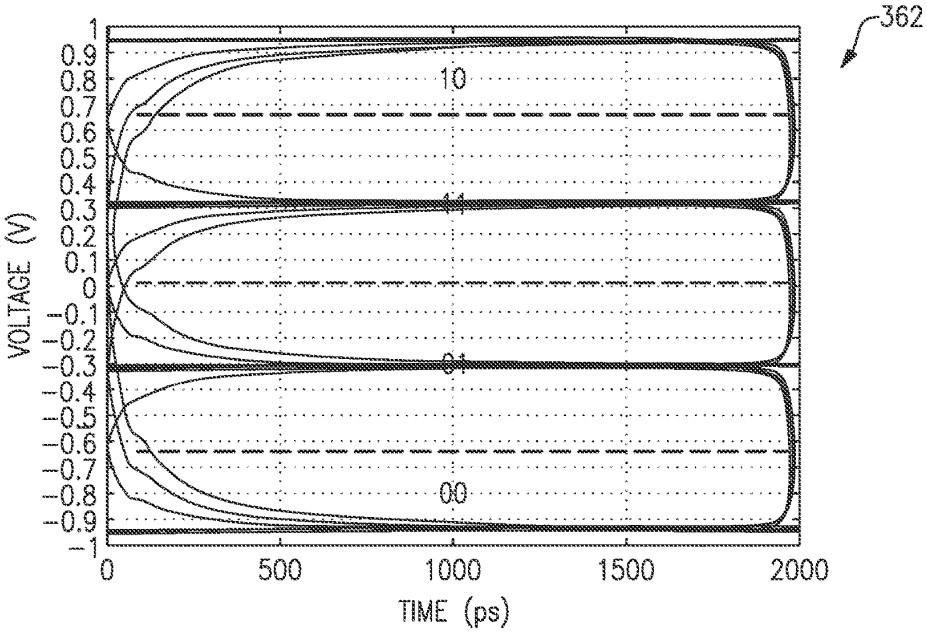
362
VOLTAGE (V)
TIME (ps)
10
11
01
00
0
500
1000
1500
2000

FIG.7B

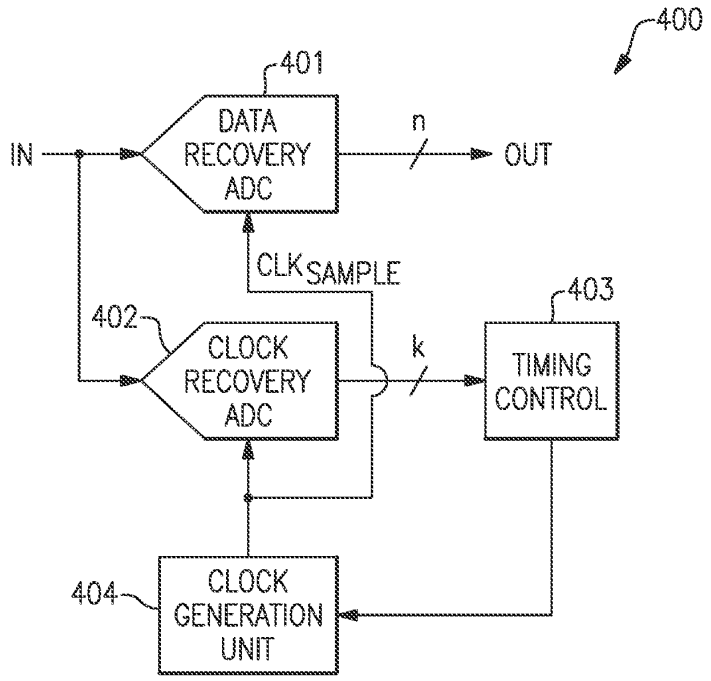
400
401
DATA RECOVERY ADC
IN
n
OUT
CLKSAMPLE
402
CLOCK RECOVERY ADC
k
403
TIMING CONTROL
404
CLOCK GENERATION UNIT

FIG.8

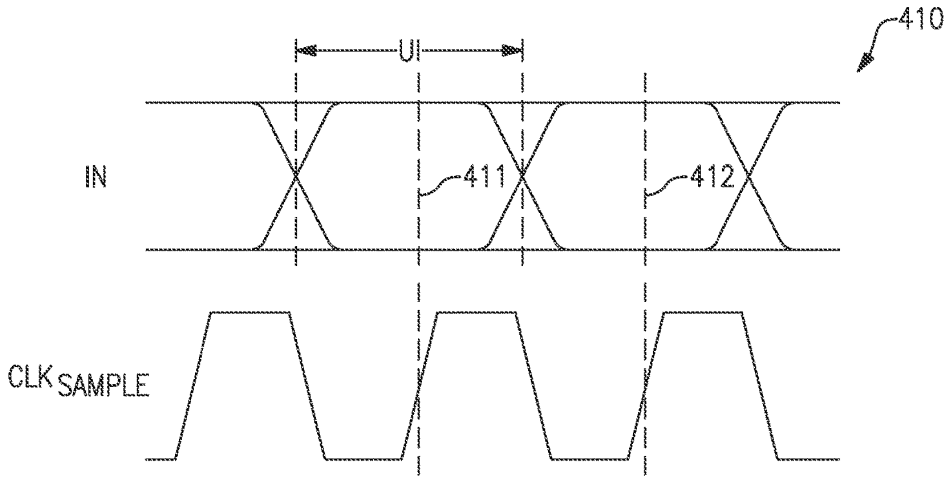

FIG.9A

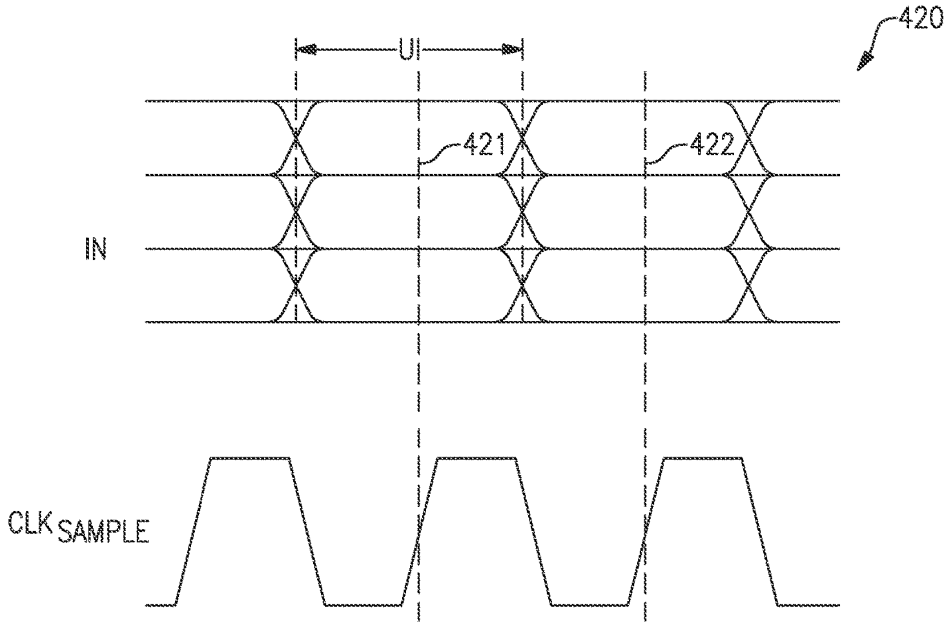

FIG.9B

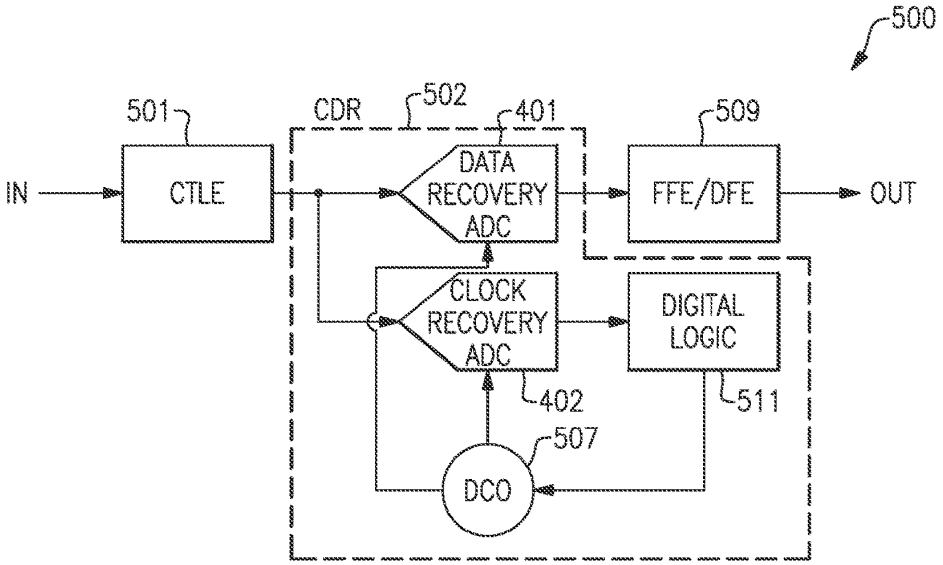
500
501
CDR
502
401
509
IN
CTLE
DATA RECOVERY ADC
FFE/DFE
OUT
CLOCK RECOVERY ADC
DIGITAL LOGIC
402
511
507
DCO

FIG.10

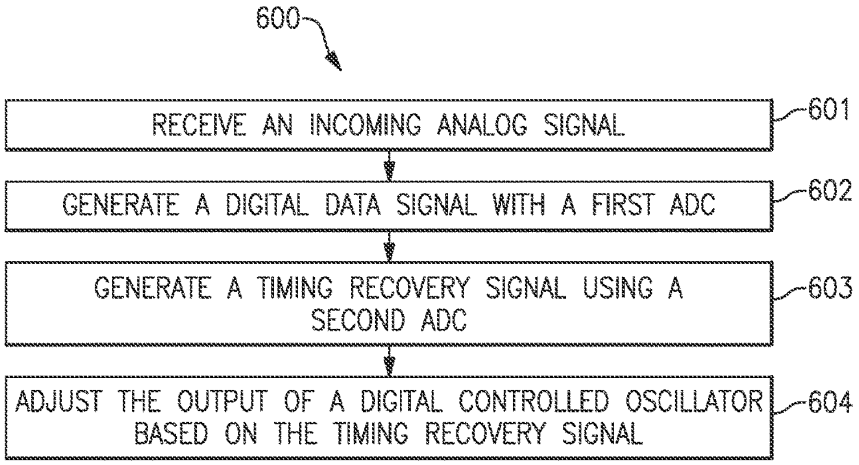
600
RECEIVE AN INCOMING ANALOG SIGNAL
601
GENERATE A DIGITAL DATA SIGNAL WITH A FIRST ADC
602
GENERATE A TIMING RECOVERY SIGNAL USING A SECOND ADC
603
ADJUST THE OUTPUT OF A DIGITAL CONTROLLED OSCILLATOR BASED ON THE TIMING RECOVERY SIGNAL
604

FIG.11

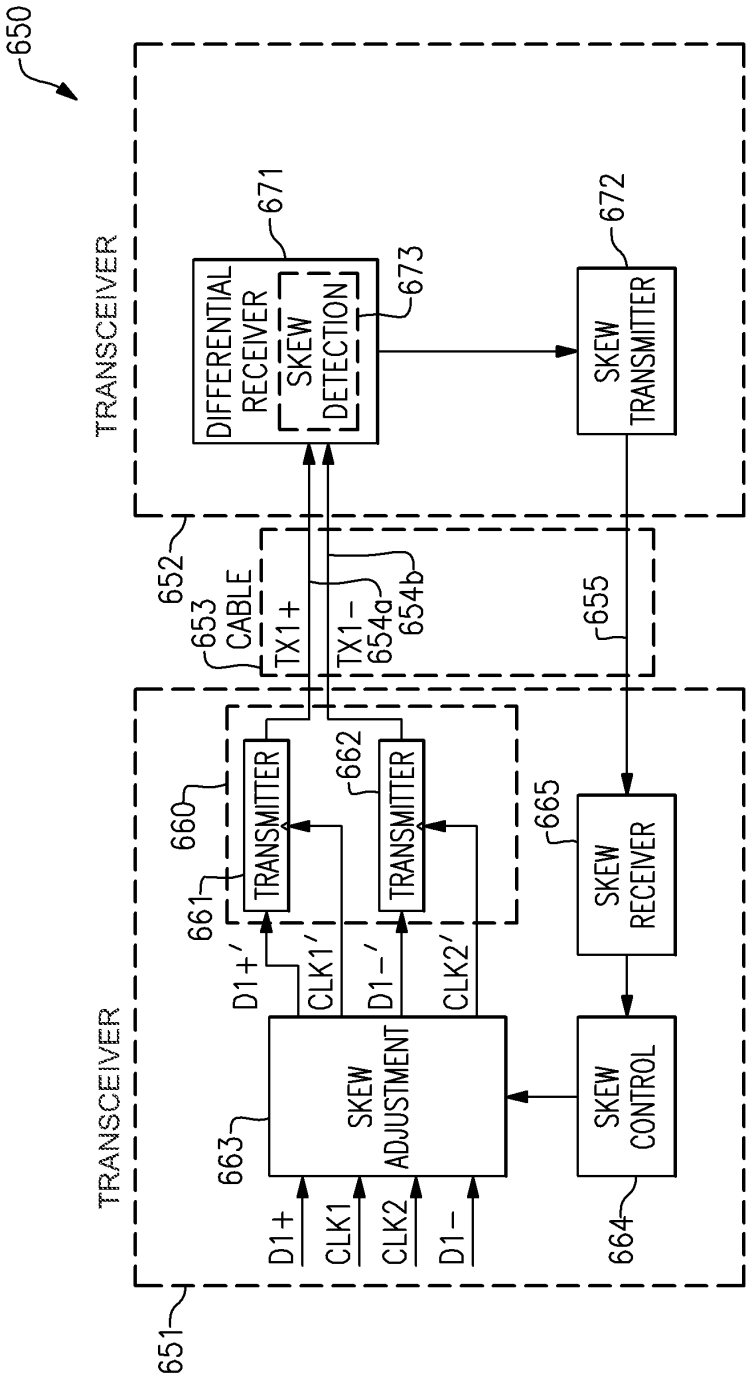
650
TRANSCEIVER
DIFFERENTIAL RECEIVER
SKEW DETECTION
671
673
SKEW TRANSMITTER
672
652
653
CABLE
TX1+
TX1−
654a
654b
655
TRANSCEIVER
660
661
TRANSMITTER
662
TRANSMITTER
D1+′
CLK1′
D1−′
CLK2′
SKEW ADJUSTMENT
663
D1+
CLK1
CLK2
D1−
SKEW RECEIVER
665
SKEW CONTROL
664
651

FIG.12A

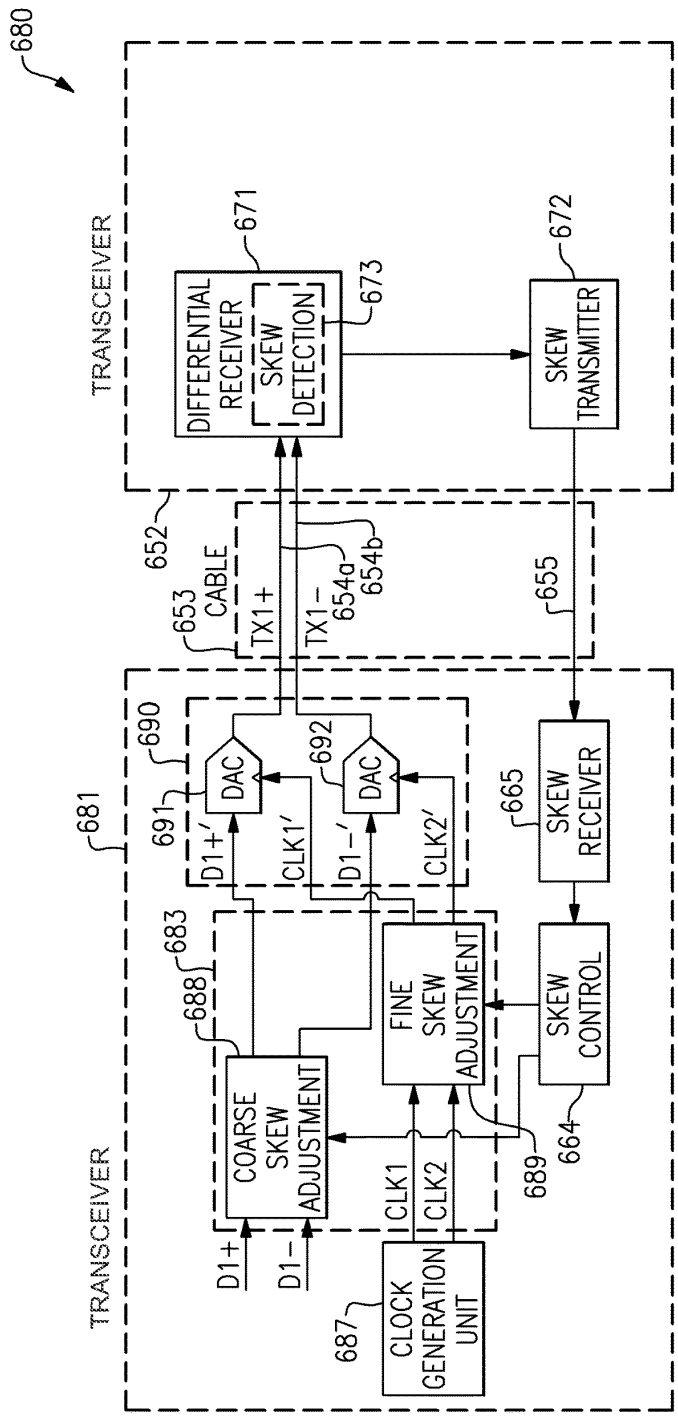
680
TRANSCEIVER
DIFFERENTIAL RECEIVER
SKEW DETECTION
671
673
SKEW TRANSMITTER
672
652
CABLE
653
TX1+
TX1−
654a
654b
655
681
690
691
692
DAC
DAC
D1+′
CLK1′
D1−′
CLK2′
SKEW RECEIVER
665
683
688
COARSE SKEW ADJUSTMENT
FINE SKEW ADJUSTMENT
SKEW CONTROL
664
689
D1+
D1−
CLK1
CLK2
CLOCK GENERATION UNIT
687

FIG.12B

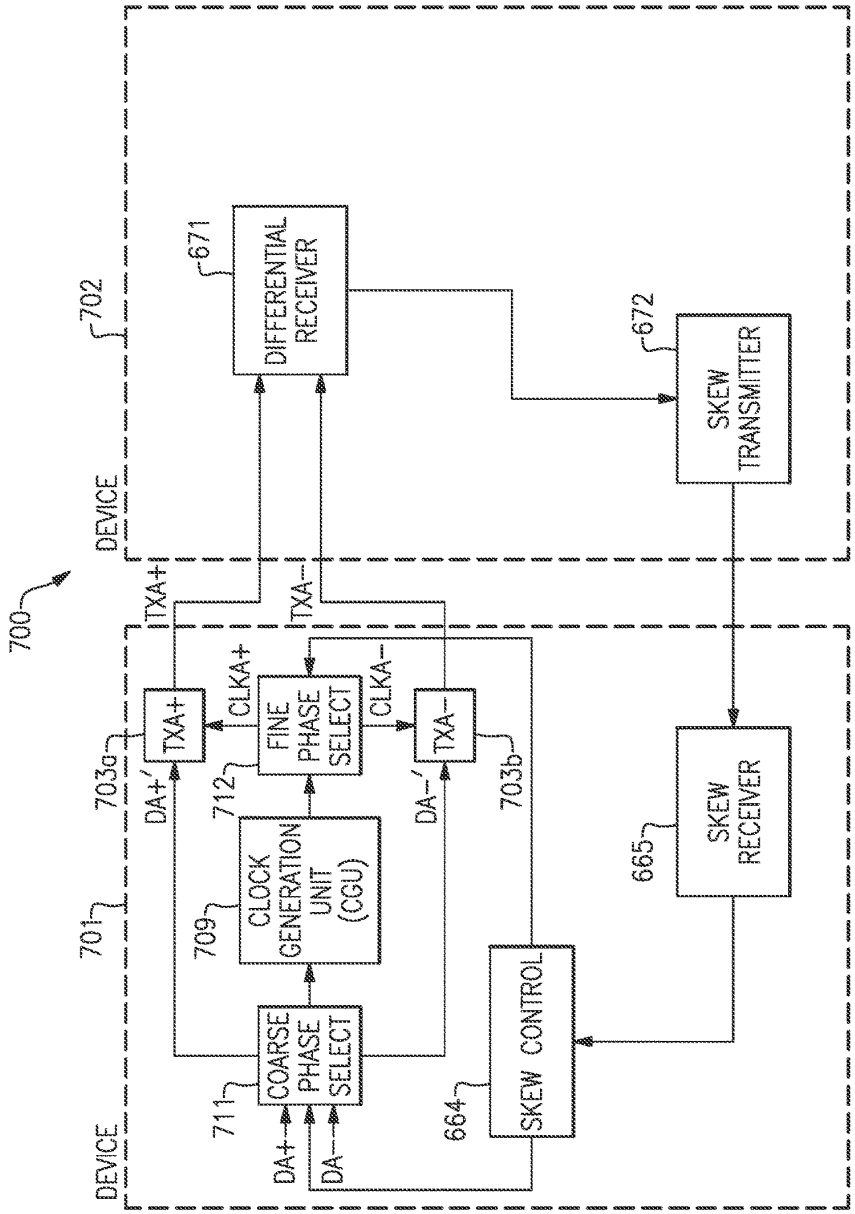
700
DEVICE
702
DIFFERENTIAL RECEIVER
671
SKEW TRANSMITTER
672
TXA+
TXA−
DEVICE
701
TXA+
703a
DA+′
CLKA+
FINE PHASE SELECT
712
CLKA−
TXA−
703b
DA−′
CLOCK GENERATION UNIT (CGU)
709
COARSE PHASE SELECT
711
DA+
DA−
SKEW CONTROL
664
SKEW RECEIVER
665

FIG.13A

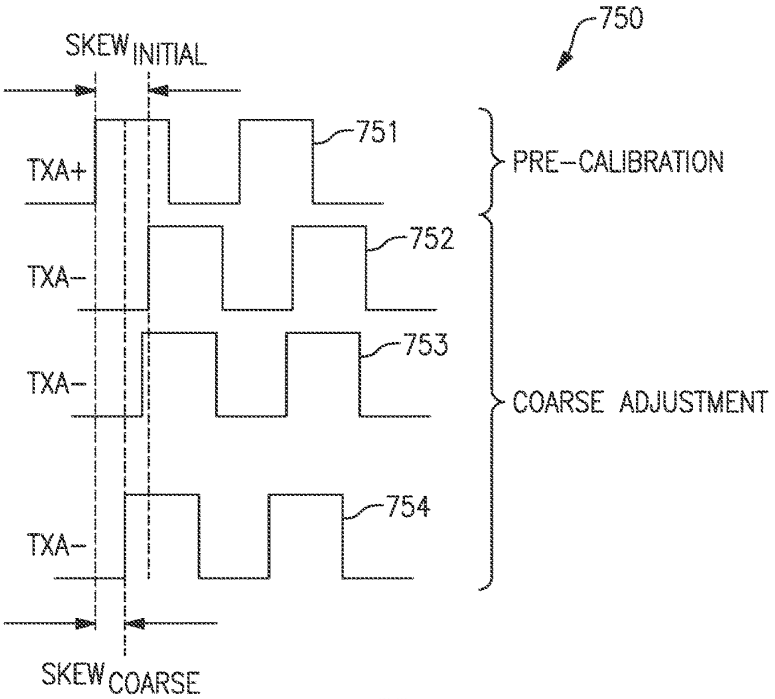

FIG.13B

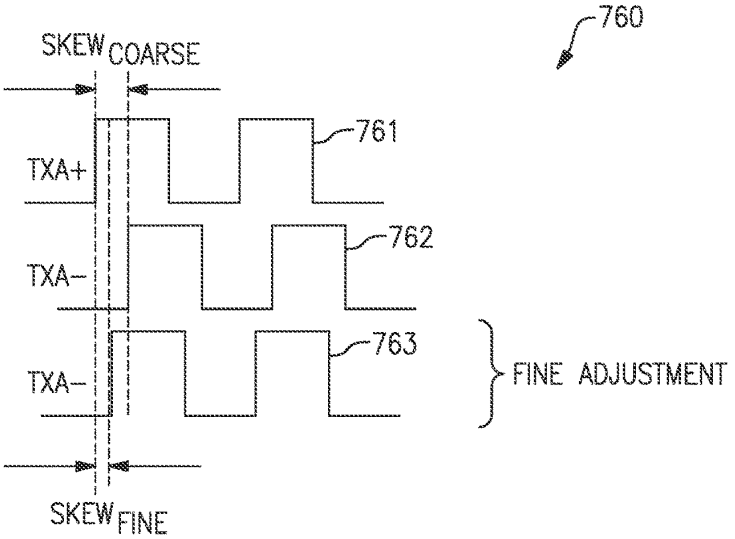

FIG.13C

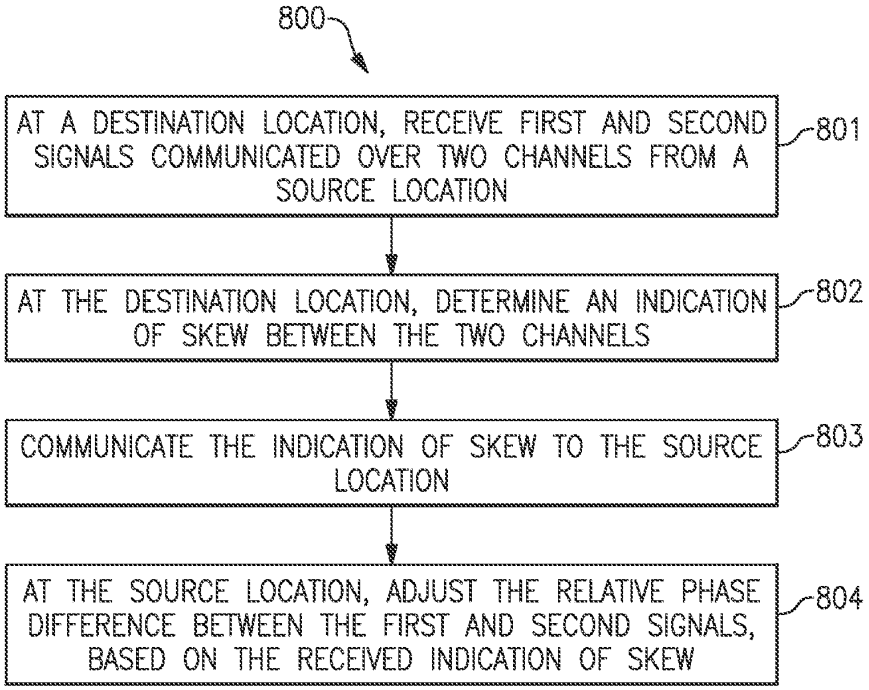
800
AT A DESTINATION LOCATION, RECEIVE FIRST AND SECOND SIGNALS COMMUNICATED OVER TWO CHANNELS FROM A SOURCE LOCATION
801
AT THE DESTINATION LOCATION, DETERMINE AN INDICATION OF SKEW BETWEEN THE TWO CHANNELS
802
COMMUNICATE THE INDICATION OF SKEW TO THE SOURCE LOCATION
803
AT THE SOURCE LOCATION, ADJUST THE RELATIVE PHASE DIFFERENCE BETWEEN THE FIRST AND SECOND SIGNALS, BASED ON THE RECEIVED INDICATION OF SKEW
804

FIG.14

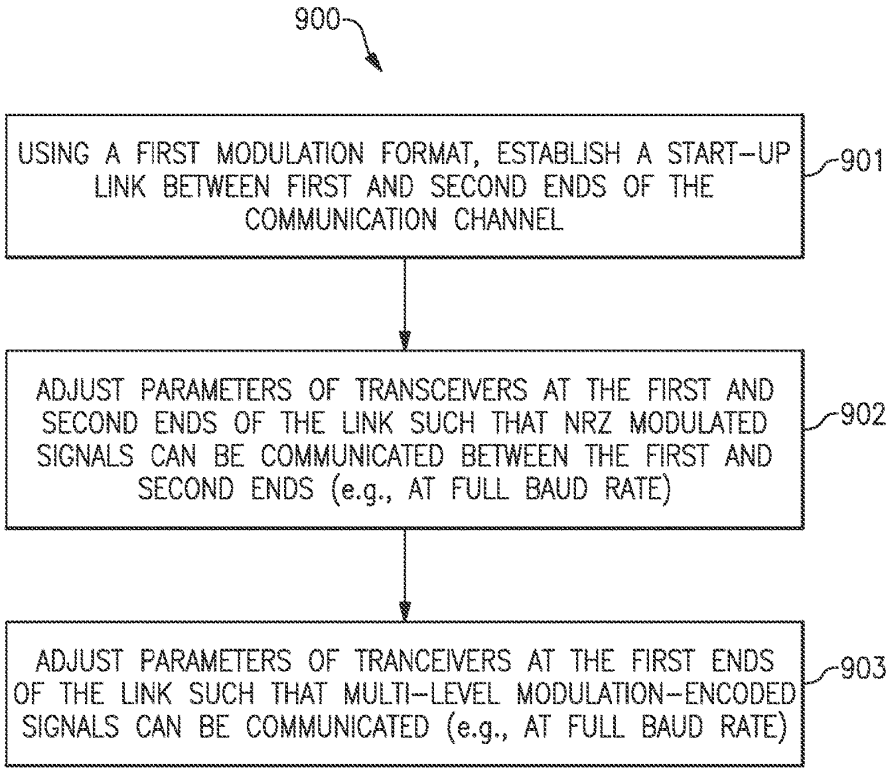
900
USING A FIRST MODULATION FORMAT, ESTABLISH A START-UP LINK BETWEEN FIRST AND SECOND ENDS OF THE COMMUNICATION CHANNEL
901
ADJUST PARAMETERS OF TRANSCEIVERS AT THE FIRST AND SECOND ENDS OF THE LINK SUCH THAT NRZ MODULATED SIGNALS CAN BE COMMUNICATED BETWEEN THE FIRST AND SECOND ENDS (e.g., AT FULL BAUD RATE)
902
ADJUST PARAMETERS OF TRANCEIVERS AT THE FIRST ENDS OF THE LINK SUCH THAT MULTI-LEVEL MODULATION-ENCODED SIGNALS CAN BE COMMUNICATED (e.g., AT FULL BAUD RATE)
903

FIG.15

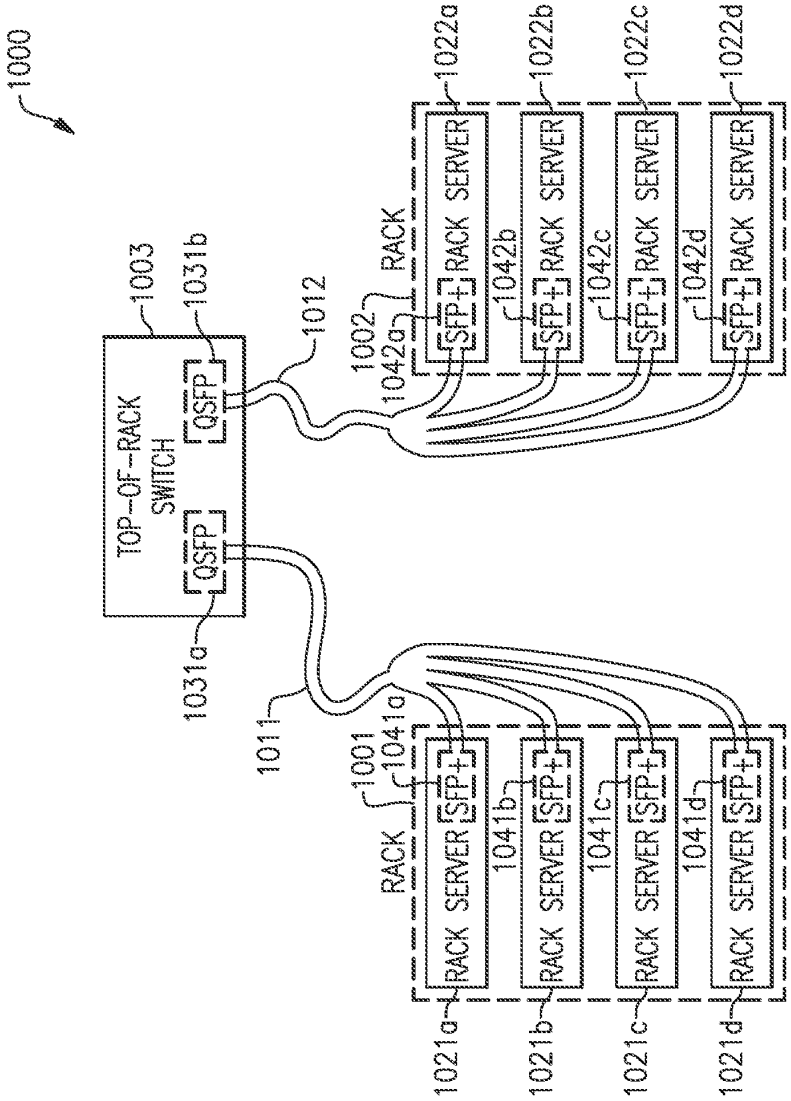
1000
TOP-OF-RACK SWITCH
1003
QSFP
QSFP
1031a
1031b
1012
1011
1001
1002
RACK
RACK SERVER
SFP+
1041a
1041b
1041c
1041d
1042a
1042b
1042c
1042d
1021a
1021b
1021c
1021d
1022a
1022b
1022c
1022d

FIG.16

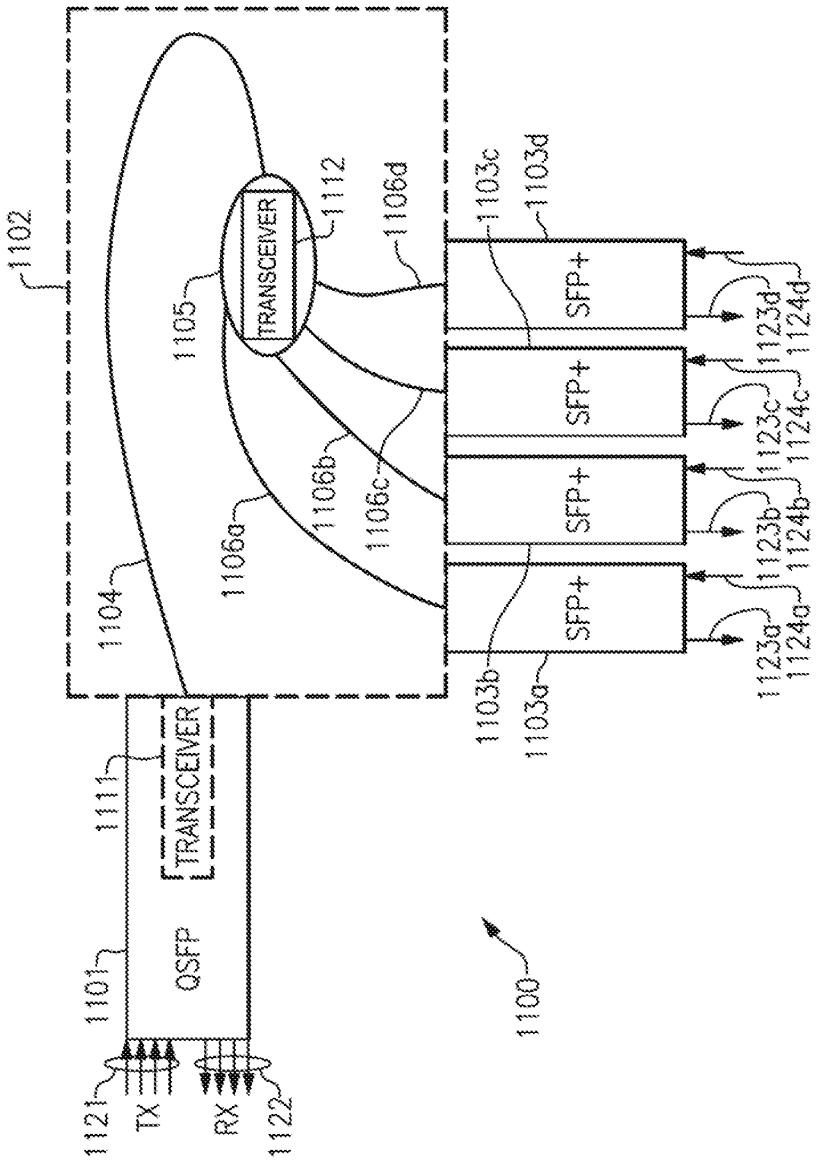
1102
1104
1105
TRANSCEIVER
1112
1106a
1106b
1106c
1106d
1103a
1103b
1103c
1103d
SFP+
SFP+
SFP+
SFP+
1123a
1123b
1123c
1123d
1124a
1124b
1124c
1124d
1100
1101
QSFP
1111
TRANSCEIVER
1121
TX
RX
1122

FIG.17A

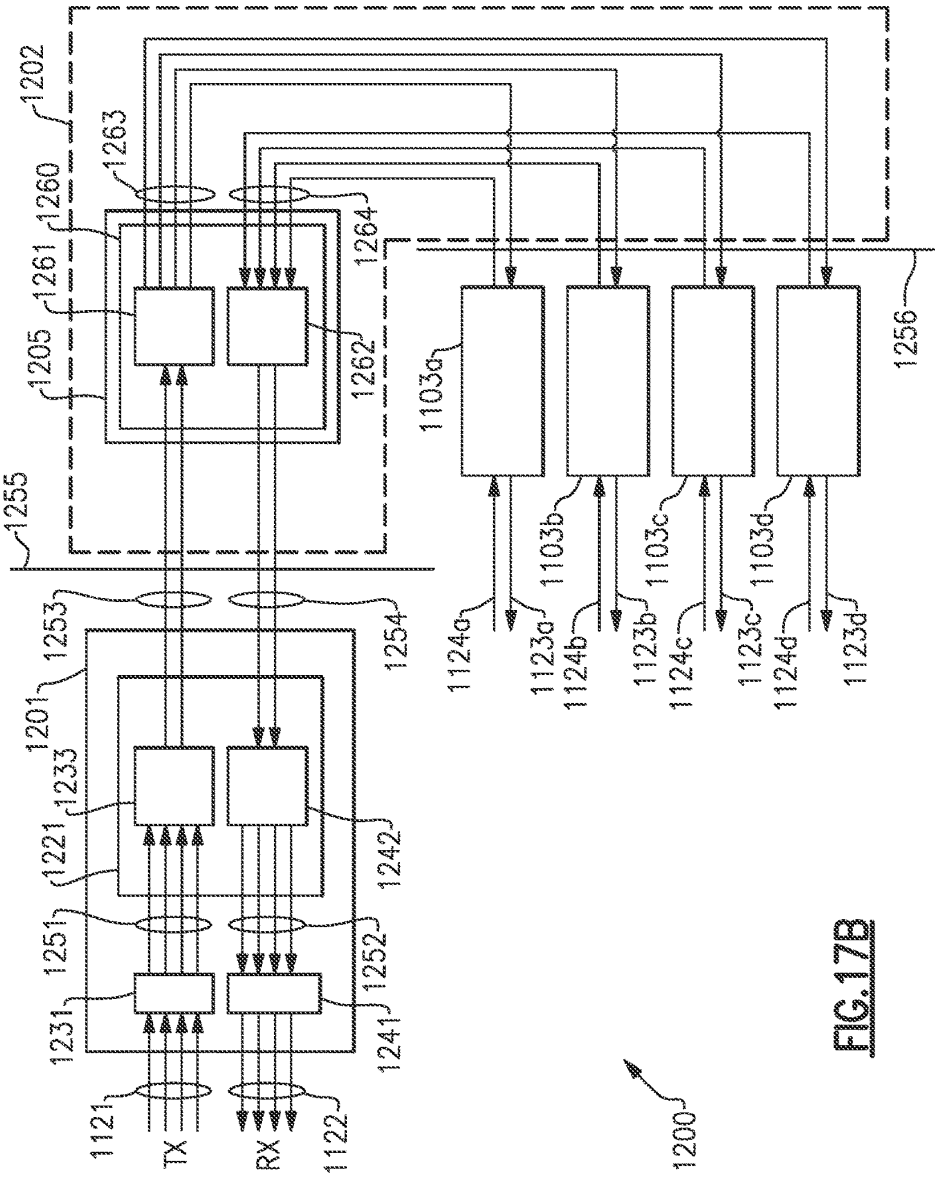
1202
1263
1260
1261
1205
1264
1262
1255
1253
1254
1201
1233
1221
1242
1251
1252
1231
1241
1121
TX
RX
1122
1200
1103a
1103b
1103c
1103d
1124a
1123a
1124b
1123b
1124c
1123c
1124d
1123d
1256

FIG.17B

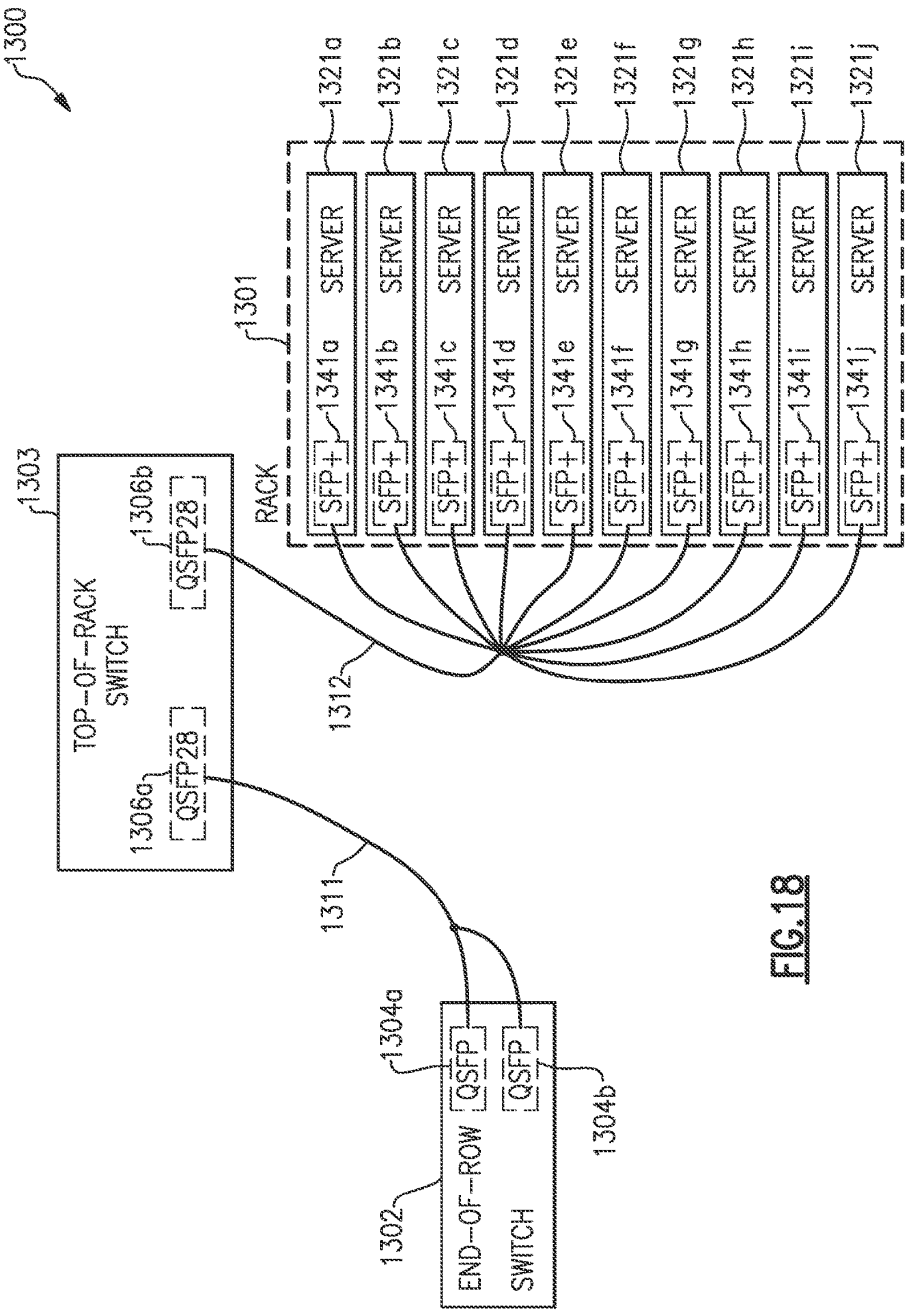
1300
1303
TOP-OF-RACK SWITCH
1306a
QSFP28
1306b
QSFP28
1311
1312
RACK
1301
SFP+
1341a
1341b
1341c
1341d
1341e
1341f
1341g
1341h
1341i
1341j
SERVER
1321a
1321b
1321c
1321d
1321e
1321f
1321g
1321h
1321i
1321j
1302
END-OF-ROW SWITCH
1304a
QSFP
1304b
QSFP

FIG.18

DESKEW IN A HIGH SPEED LINK

PRIORITY

This application is a continuation of U.S. patent application Ser. No. 15/172,595, filed Jun. 3, 2016, and now issued as U.S. Pat. No. 9,742,550, entitled "DESKEW IN A HIGH SPEED LINK," which is a continuation of U.S. patent application Ser. No. 14/581,979, filed Dec. 23, 2014, and now issued as U.S. Pat. No. 9,379,878, entitled "DESKEW IN A HIGH SPEED LINK," which claims the benefit of priority under 35 U.S.C. § 119(e) of U.S. Provisional Application No. 61/921,360 filed Dec. 27, 2013, U.S. Provisional Application No. 61/927,404 filed Jan. 14, 2014, and U.S. Provisional Application No. 61/982,233 filed Apr. 21, 2014. The entire contents of each of the foregoing applications are hereby incorporated by reference.

CROSS-REFERENCE TO RELATED APPLICATIONS

Additionally, this application relates to the following U.S. patent applications, the disclosures of which are incorporated in their entirety by reference herein:

App. No.	Filing Date	Title	Attorney Docket
14/581,879	Dec. 23, 2014	CHANNEL NEGOTIATION FOR A HIGH SPEED LINK	A929KB-044500US
14/581,930	Dec. 23, 2014	TIMING RECOVERY IN A HIGH SPEED LINK	A929KB-043700US
14/581,934	Dec. 23, 2014	HIGH SPEED TRANSCEIVER	A929KB-043900US

BACKGROUND

Field

This disclosure relates to methods and systems for high-speed point-to-point communications.

Description of the Related Art

There has been widespread adoption of personal electronic devices including smart phones, tablets, notebooks, laptops, digital camera, video recorders, gaming systems, etc. These devices are being used to communicate ever-increasing quantities of data, such as between different personal electronic devices, between personal electronic devices and peripheral devices (e.g., display devices, external storage devices, etc.), and the like.

Enormous data communication demands are also present in a variety of other contexts. For example, data centers are communicating ever-increasing amounts of data, and also require fast and reliable data communication between devices. The various methods and systems disclosed herein provide various improvements and benefits vis-à-vis existing high-speed communication technologies.

SUMMARY

The systems, methods and devices of the disclosure each have several innovative aspects, no single one of which is solely responsible for the desirable attributes disclosed herein.

In one aspect, a clock and data recovery (CDR) circuit is provided comprising a data recovery analog-to-digital converter (ADC) configured to receive an input signal and to

generate a first digital output signal. The CDR circuit can include a clock recovery ADC configured to receive the input signal and to generate a second digital output signal. The data recovery ADC can have a higher resolution than the clock recovery ADC. The CDR circuit can further include a timing control circuit configured to receive the second digital output signal and to generate a clock control signal based on the second digital output signal. The CDR circuit can further include a clock generation unit configured to control a timing of the data recovery ADC and a timing of the clock recovery ADC based on the clock control signal. The first digital output signal comprises at least 3 bits, and wherein the second digital output signal comprises at least 2 bits.

According to another aspect, a transceiver is provided comprising an equalizer configured to receive a data signal and to generate a clock and data recovery (CDR) input signal based on equalizing the data signal. The transceiver can include a CDR circuit comprising a data recovery analog-to-digital converter (ADC) configured to receive the CDR input signal and to generate a first digital output signal. The transceiver can further include a clock recovery ADC configured to receive the CDR input signal and to generate a second digital output signal. The data recovery ADC has a higher resolution than the clock recovery ADC according to certain embodiments. The CDR circuit can further include a timing control circuit configured to receive the second digital output signal and to generate a clock control signal based on the second digital output signal. The CDR circuit can also include a clock generation unit configured to control a timing of the data recovery ADC and a timing of the clock recovery ADC based on the clock control signal.

According to certain aspects, a method of clock and data recovery is provided. The method includes generating a first digital output signal based on an input signal using a data recovery analog-to-digital converter (ADC). The method can further include generating a second digital output signal based on the input signal using a clock recovery ADC. The data recovery ADC can have a higher resolution than the clock recovery ADC. The method can additionally include generating a clock control signal based on the second digital output signal using a timing control circuit. The method can further include controlling a timing of the data recovery ADC and a timing of the clock recovery ADC based on the clock control signal.

According to an additional aspect, a communication system is provided comprising a first transceiver. The first transceiver can include a differential transmitter configured to generate a differential signal. The differential transmitter can include a first transmitter configured to generate a non-inverted component of the differential signal and a second transmitter configured to generate an inverted component of the differential signal. The communication system can further include a skew adjustment circuit configured to control a timing of transmissions of the first transmitter relative to a timing of transmissions of the second transmitter. The communication system can additionally include a skew control circuit configured to receive a skew indication signal indicating a skew of the differential signal. The skew control circuit may be configured to control an amount of skew adjustment provided by the skew adjustment circuit based on the skew indication signal.

According to additional aspects, a method of correcting for skew in a communication system is provided. The method can include transmitting a differential signal over a cable using a differential transmitter of a first transceiver. The step of transmitting the differential signal can include

generating a non-inverted component of the differential signal using a first transmitter of the differential transmitter and generating an inverted component of the differential signal using a second transmitter of the differential transmitter. The method can further include receiving a skew indication signal as an input to a skew control circuit of the first transceiver. The method can additionally include controlling an amount of skew adjustment provided by a skew adjustment circuit of the first transceiver using the skew control circuit, wherein controlling the amount of skew adjustment comprises controlling a timing of transmissions of the first transmitter relative to a timing of transmissions of the second transmitter.

An apparatus is provided according to a further aspect. The apparatus can include a cable and a first electronic device, where the first electronic device can include a differential transmitter configured to transmit a differential signal over the cable. The first electronic device can additionally include a skew adjustment circuit configured to adjust a skew of the differential transmitter by controlling a timing of a transmission of a first component of the differential signal relative to a timing of a transmission of a second component of the differential signal. The first electronic device an further include a skew control circuit configured to receive a skew indication signal and to control an amount of skew adjustment provided by the skew adjustment circuit based on the skew indication signal. The apparatus can also include a second electronic device comprising a differential receiver configured to receive the differential signal over the cable, wherein the differential receiver comprises a skew detector configured to generate the skew indication signal.

According to an additional aspect, a communication device includes a host interface including at least two inputs for receiving signals from a host device at a total data rate of at least 40 Gbit/s. The communication device can further include host-side analog-to-digital converter (ADC) circuitry configured to digitize the received signals to generate at least two digital data channels each having a first data rate. The device can also include a digital signal processor configured to digitally condition the at least two digital data channels and multi-level encode the at least two digital data channels to generate a reduced number of one or more multiplexed digital data channels that each have a second data rate higher than the first data rate. The device may also include line-side digital-to-analog converter (DAC) circuitry configured to convert the multiplexed one or more digital data channels into one or more differential output signals. In addition, the device can include a line interface comprising one or more differential outputs each configured to transmit a corresponding one of the differential output signals onto corresponding paired differential cables. The egress path may be configured to deliver the one or more differential output signals onto the paired differential cables such that the line interface operates at a total data rate of at least 40 Gbit/s.

In a further aspect, a method of electronic communication includes receiving a first plurality of host-side signals from a host device, wherein each of the first plurality of host-side signals has a first data rate. The method can further include converting the first plurality of host-side signals into a plurality of digitized egress signals using host-side analog-to-digital converter (ADC) circuitry. The method may also include processing the plurality of digitized egress signals to generate one or more multiplexed signals using a first digital signal processor. The step of processing the plurality of digitized egress signals can include digitally conditioning the plurality of digitized egress signals and encoding the one or more multiplexed signals with a multi-level encoding. The method can additionally include converting the one or more multiplexed signals into one or more differential output signals using line-side digital-to-analog converter (DAC) circuitry. Each of the one or more differential output signals can have a second data rate greater than the first data rate. In addition, the method can include transmitting the one or more differential output signals over one or more paired differential conductors of a cable at a data rate of at least 40 Gbit/s.

According to yet another aspect, an active cable comprises a first cable comprising a first pair of conductors including a first pluggable module. The first pluggable module can include a first transceiver including host-side analog-to-digital converter (ADC) circuitry configured to receive a first plurality of host-side signals and to generate a plurality of digitized egress signals. A first host-side signal of the first plurality of host-side signals can have a first data rate. The first transceiver can further include a first digital signal processor (DSP) configured to generate one or more multiplexed signals based on multiplexing the plurality of digitized egress signals. The one or more multiplexed signals can have a multi-level encoding. The transceiver can further include line-side digital-to-analog converter (DAC) circuitry configured to convert the one or more multiplexed signals into one or more differential output signals including a first differential output signal. The line-side DAC circuitry can be configured to transmit the first differential output signal over the first pair of conductors at a second data rate that is greater than the first data rate.

According to an additional aspect, a method of negotiating a communication channel between transceivers includes, as part of a first stage of a channel negotiation between a first transceiver and a second transceiver, exchanging information between the first and second transceiver over the communication channel in a reduced speed mode. The method can further include, as part of a second stage of the channel negotiation subsequent to the first stage, adaptively acquiring one or more parameters associated with the communication channel. The method can additionally include exchanging information between the first and second transceivers for use in the channel negotiation. In addition, the method can include, as part of a third stage of the channel negotiation subsequent to the second stage, entering a full functional mode in which information is exchanged between the first and second transceivers using multi-level modulation.

A communication system according to another aspect includes a communication channel, a first transceiver, and a second transceiver coupled to the first transceiver over the communication channel. The first and second transceivers may be configured to exchange information over the communication channel in a reduced speed mode during a first stage of a channel negotiation. The first and second transceivers can be further configured to adaptively acquire one or more parameters associated with the communication channel during a second stage of the channel negotiation subsequent to the first stage. In addition, the first and second transceivers can be configured to enter a full functional mode in which information is exchanged between the first and second transceivers using multi-level modulation during a third stage of the channel negotiation subsequent to the second stage.

Details of one or more implementations of the subject matter described in this specification are set forth in the accompanying drawings and the description below. Other

features, aspects, and advantages will become apparent from the description, the drawings, and the claims. Note that the relative dimensions of the following figures may not be drawn to scale.

BRIEF DESCRIPTION OF THE DRAWINGS

Example implementations disclosed herein are illustrated in the accompanying schematic drawings, which are for illustrative purposes only.

FIG. **1**A is a schematic diagram of one embodiment of a transceiver.

FIG. **1**B is a schematic diagram of another embodiment of a transceiver.

FIG. **1**C is a schematic diagram of another embodiment of a transceiver.

FIG. **1**D is a schematic diagram of another embodiment of a transceiver.

FIG. **2**A is a schematic diagram of a high-speed point-to-point communication system according to one embodiment.

FIG. **2**B is a schematic diagram of a high-speed point-to-point communication system according to another embodiment.

FIG. **3**A illustrates a cross-sectional view of one embodiment of a cable.

FIG. **3**B illustrates a cross-sectional view of another embodiment of a cable.

FIG. **3**C illustrates a cross-sectional view of another embodiment of a cable.

FIG. **4**A illustrates an example of a communication system including a transceiver connected to another similar transceiver by a cable.

FIG. **4**B illustrates a portion of the communication system of FIG. **4**A.

FIG. **5** is a schematic diagram of another embodiment of a transceiver.

FIG. **6**A is a flowchart that illustrates an example method of multiplexing at least two electrical input signals received from an electronic device.

FIG. **6**B is a flowchart that illustrates an example method of de-multiplexing electrical signals.

FIG. **7**A illustrates an eye-diagram for an NRZ modulated data signal.

FIG. **7**B illustrates an eye-diagram for a PAM-4 modulated data signal.

FIG. **8** is a schematic diagram of one embodiment of a clock and data recovery (CDR) circuit.

FIG. **9**A is one example of a timing diagram for the CDR circuit of FIG. **8**.

FIG. **9**B is another example of a timing diagram for the CDR circuit of FIG. **8**.

FIG. **10** illustrates a schematic of an implementation of a clock and data recovery system with digital clock recovery according to one embodiment.

FIG. **11** is a flowchart that illustrates a method of digitally recovering clock and data using the clock and data recovery system depicted in FIG. **10**.

FIG. **12**A is a schematic diagram of a communication system according to another embodiment.

FIG. **12**B is a schematic diagram of a communication system according to another embodiment.

FIG. **13**A illustrates an implementation of a communication system that can detect and correct skew between two physical channels.

FIG. **13**B illustrates one example of a timing diagram of coarse skew adjustment for the communication system of FIG. **13**A.

FIG. **13**C illustrates one example of a timing diagram of fine skew adjustment for the communication system of FIG. **13**A.

FIG. **14** is a flowchart that illustrates a method of detecting and correcting skew between two physical channels.

FIG. **15** is a flowchart that illustrates a method of establishing a high-speed communication link between a first electronic device and a second electronic device.

FIG. **16** is a schematic diagram of a data center system according to one embodiment.

FIG. **17**A is a schematic diagram of a breakout cable according to one embodiment.

FIG. **17**B is a schematic diagram of a breakout cable according to another embodiment.

FIG. **18** is a schematic diagram of a data center system according to another embodiment.

Like reference numbers and designations in the various drawings may indicate like elements.

DETAILED DESCRIPTION

The following detailed description is directed to certain implementations for the purposes of describing the innovative aspects. However, the teachings herein can be applied in a multitude of different ways. As will be apparent from the following description, the innovative aspects may be implemented in any high-speed communication system that is configured to transmit and receive data between electronic devices which can include laptops, notebooks, tablets, desktop computers, data centers, gaming devices, data storage systems, input/output peripheral devices, display devices, etc. The innovative aspects may be implemented in or associated with data transport networks, storage area networks, enterprise networks, private networks, secure networks, financial networks, etc. Other uses are also possible.

There are a number of interface standards that can support data transfer between different electronic, computing, storage and peripheral devices. For example, speeds of between about 480 Mbits/s and about 10 Gbit/s have been achieved with systems that implement Thunderbolt Gen1/Gen2, USB 2.0/3.0 and/or IEEE 1394b. The performance of communication systems is limited, however, by factors including intersymbol interference (ISI) and other characteristics of associated with the cable including loss, noise, dispersion and non-linear response.

ISI is a form of signal distortion in which a symbol in a digital data stream interferes with subsequent symbols. At lower data rates the effects of ISI are not as problematic since the time interval between two successive symbols is large (e.g., 1.0 ns at 10 Gbit/s). However, as data rates increase (e.g., at data rates greater than 10 Gbit/s), the effects of ISI can increase the errors in the received digital data since the time interval between two successive symbols is reduced (e.g., 0.5 ns at 20 Gbit/s and 0.25 ns at 40 Gbit/s). ISI can be reduced by reducing the loss, noise, dispersion and/or non-linearity of the channel or by designing the transceivers to compensate for or reduce the effects of ISI.

Systems and methods described herein include innovative transceiver architectures and novel ways of re-timing, multiplexing, de-multiplexing and transmitting data to achieve reliable high-speed point-to-point communication between different electronic devices, computing devices, storage devices and peripheral devices in the presence of ISI and/or other interference or noise.

A high-speed communication link can include a cable and a pair of transceivers provided at respective ends of the cable. The cable can be implemented in a wide variety of ways. For example, in certain configurations, the cable can correspond to an electrical cable including one or more pairs of differential micro coaxial cables or conductors. However, other configurations are possible, such as implementations in which the cable is implemented as an optical cable.

In certain configurations, the transceivers can implement a serializer/deserializer (SerDes) function. For example, in certain implementations each transceiver can be a full duplex multiplexer and re-timer capable of receiving multiple (e.g., 2, 4, or more) signals from a host via a host-side interface. The transceiver multiplexes the received signals for transmission via a line-side interface over the cable utilizing a reduced number of channels. The multiplexing reduces cabling cost and complexity, and can be achieved via multi-level modulation encoding, for example. In one non-limiting embodiment, each transceiver is capable of receiving dual 20 Gbit/s non-return-to-zero (NRZ) signals and multiplexing these signals into a single 40 Gbit/s signal via four level pulse amplitude modulation (PAM-4) for transmission over the cable.

The transceiver can also be configurable in different operational modes. For instance, depending on the mode, the transceiver can handle different numbers of host-side data streams having variable data rates. In one embodiment, the transceiver operates in a first operational mode to translate two host-side 20 Gbit/s NRZ data streams into a single PAM-4 40 Gbit/s stream on the line side, and vice versa. In a second operational mode, the transceiver translates four host-side 10 Gbps NRZ data streams into a single PAM-4 40 Gbit/s stream on the line-side, and vice versa. Such flexibility allows the transceiver to be employed in a variety of different contexts, such as in both consumer and data center contexts.

The transceiver in some embodiments includes a timing recovery circuit including a digital clock recovery path having a dedicated, relatively low latency and/or low power analog-to-digital converter (ADC). The data path can include a separate ADC having more bits than the ADC included in the clock recovery path. Different filtering can be used in the clock and data paths. Moreover, the digital output from the clock recovery path can be used to drive a digitally controlled oscillator (DCO) rather than implementing an analog phase-locked loop (PLL), further reducing latency.

A de-skew function can additionally be included in the transceiver to reduce or eliminate skew between signals in parallel conducting lines, e.g., between differential signals travelling over paired micro coaxial lines in the cable. Moreover, the de-skew function can be implemented in the line-side transmitter via a feedback mechanism, rather than in the line-side receiver, significantly reducing cost or complexity and/or enhancing performance.

A negotiation process is implemented according to certain aspects in order to establish the link between transceivers on either end of the line. The negotiation process can include a variety of steps including, without limitation, de-skew, operating mode negotiation, clock recovery, transmit pulse shaping, equalization, and the like. Negotiation can involve different stages that can include, for example, a reduced speed start-up mode, an NRZ training mode, and a functional training mode. Moreover, the transceivers in some embodiments advantageously insert an in-band communication channel into to the user data stream for negotiation purposes.

Examples of Transceivers, Point-to-Point Communication Systems, and Cables

FIG. **1**A is a schematic diagram of one example of a transceiver **10**. The transceiver **10** includes a first transmit path equalizer **11***a*, a second transmit path equalizer **11***b*, a first transmit path clock and data recovery (CDR) circuit **12***a*, a second transmit path CDR circuit **12***b*, a transmit path digital signal processor (DSP) **13**, a transmit path DAC **14**, a receive path equalizer **21**, a receive path CDR circuit **22**, a receive path DSP **23**, a first receive path DAC **24***a*, and a second receive path DAC **24***b*.

The transceiver **10** of FIG. **1**A illustrates one example of a transceiver which can include one or more of the features disclosed herein. However, the teachings herein are applicable to other systems or apparatus, including, for example, other configurations of transceivers.

As shown in FIG. **1**A, the first and second transmit path equalizers **11***a*, **11***b* include inputs that receive host side transmit data (TX DATA) and outputs electrically connected to inputs of the first and second transmit path CDR circuits **12***a*, **12***b*, respectively. The first and second transmit path CDR circuits **12***a*, **12***b* further include outputs electrically connected to inputs of the transmit path DSP **13**. The transmit path DAC **14** includes an input electrically connected to an output of the transmit path DSP **13** and an output that generates a line side transmit signal (TX). The receive path equalizer **21** includes an input that receives a line side receive signal (RX), and an output electrically connected to an input of the receive path CDR circuit **22**. The receive path CDR circuit **22** further includes an output electrically connected to an input of the receive path DSP **23**. The receive path DSP **23** further includes outputs electrically connected to inputs of the first and second receive path DACs **24***a*, **24***b*. The first and second receive path DACs **24***a*, **24***b* further include outputs that generate host side receive data (RX DATA).

The transceiver **10** can be used to support data transfer between various electronic devices, such as computing devices, storage devices, and/or peripheral devices. For example, the transceiver **10** can communicate with one or more additional transceivers using a wide variety of communications interface standards, including, for example, Thunderbolt Gen1/Gen2, USB 2.0/3.0, or IEEE 1394b.

In certain configurations, the transceiver **10** can implement a serializer/deserializer (SerDes) function or operation. For example, in one embodiment, the transceiver **10** can operate as a full duplex multiplexer and re-timer capable of receiving multiple (for example, 2, 4, or more) signals from a host via a host-side interface. Additionally, the transceiver **10** can multiplex the received host-side transmit signals for transmission via a line-side interface over a cable utilizing a reduced number of channels. The multiplexing reduces cabling cost and complexity, and can be achieved, for example, via multi-level modulation encoding. In one non-limiting example, an egress/transmit path of the transceiver **10** is capable of receiving dual 20 Gbit/s non-return-to-zero (NRZ) signals on the host side and multiplexing these signals into a single 40 Gbit/s signal via four level pulse amplitude modulation (PAM-4) for transmission to the line side over the cable. Conversely, an ingress/receive path of the transceiver in such an example is capable of receiving a single 40 Gbit/s PAM-4 signal on the line side and demultiplexing this signal into dual 20 Gbit/s NRZ signals for communication to the host side.

FIG. **1**A illustrates the host side transmit data as including two signals and the line side transmit data as including one signal (e.g., via a multiplexing operation), and illustrates the

line side receive data as including one signal and the host side receive data as including two signals (via a de-multiplexing operation). However, other configurations are possible, including configurations with additional signals on the host side and/or line side. For example, the first and second receive path DACs **24***a*, **24***b* can be replicated in parallel to include, for instance, 10, 20, or 40 or more DACs to provide wider RX DATA bandwidth. Similarly, the first and second transmit path equalizers **11***a*, **11***b* and the first and second transmit path CDR circuits **12***a*, **12***b* can be replicated in provide wider TX DATA bandwidth. In such configurations, different multiplexing, de-multiplexing, and/or modulation formats can be employed, as appropriate.

The receive path equalizer **21** can be used to provide signal equalization to compensate for transmission line losses on the line side, and the first and second transmit path equalizers **11***a*, **11***b* can be used to provide signal equalization to compensate for transmission line losses on the host side. For example, in certain implementations, an equalizer can be used to compensate for high-frequency signal loss by boosting high frequency components of a signal relative to low frequency components of the signal, thereby improving signal fidelity. In certain configurations, an equalizer can also be used for balancing amplitude and/or frequency characteristics associated with non-inverted and inverted components of a differential signal. In one embodiment, the transmit path equalizers **11***a*, **11***b* and/or the receive path equalizer **21** are implemented as continuous-time linear equalizers (CTLEs).

The receive path CDR circuit **22** and the first and second transmit CDR circuits **12***a*, **12***b* can be used to perform clock and data recovery operations. For example, the receive path CDR circuit **22** can receive a data stream from the receive path equalizer **21**, and can sample the data stream using a sampling clock signal. Additionally, the receive path CDR circuit **22** can control the sampling clock signal's frequency and phase to align the sampling clock signal relative to transitions in the data stream. Similarly, the first and second transmit path CDR circuits **12***a*, **12***b* can recover data in data streams generated by the first and second transmit path equalizers **11***a*, **11***b*, respectively.

The receive path DSP **23** can be used to process the data recovered by the receive path CDR circuit **22**, and the transmit path DSP **13** can be used to process the data recovered by the first and second transmit path CDR circuits **12***a*, **12***b*. In the illustrated configuration, the receive path DSP **23** includes a feed-forward equalizer and/or decision feedback equalizer (FFE/DFE) block **25**, a physical coding sublayer (PCS) block **26**, a first finite impulse response (FIR) filter **27***a*, and a second FIR filter **27***b*. Additionally, the transmit path DSP **13** includes a first FFE/DFE block **15***a*, a second FFE/DFE block **15***b*, a PCS block **16**, and a FIR filter **17**. Although one example of DSP blocks for receive path and transmit path DSPs has been provided, other configurations are possible.

The illustrated receive path and transmit path DSPs can aid in conditioning and recovering received signals and in processing and generating signals associated with various communication interface standards or signaling protocols. For example, the transmit path DSP **13** can be used to filter and/or otherwise condition received signals, and to process and combine multiple recovered data streams to generate a serialized or multiplexed output signal having a desired modulation format. For example, in one embodiment, transmit path DSP **13** can filter or otherwise recover and condition the received signal, and to process the received signal to output a digital signal of a desired format or encoding, such as PAM-4, NRZ, duobinary, differential phase-shift keying (DPSK), and/or phase-shift keying (PSK). Additionally, the receive path DSP **23** can be used to process (for example, filter or otherwise recover and condition) data recovered by the receive path CDR circuit **22**, and to deserialize the data to generate output signals having a desired modulation format for host side transmission.

In the illustrated configuration, the transmit path DAC **14** and the first and second receive path DACs **24***a*, **24***b* can be used to transmit signals generated by the transceiver **10** over transmission lines (which can include, for example, cables) to other circuitry, such as other transceivers and/or receivers. For example, the transmit path DAC **14** can be used to convert a digital output signal generated by the transmit path DSP **13** into an analog output signal, which can be provided to another transceiver electrically coupled to the transceiver **10** on the line side by a cable. Depending on the environment, the transmission line can include, for example, cables, printed circuit board (PCB) trace, backplane trace, and/or other electrical interconnect associated with the transmission line. Similarly, the first and second receive path DACs **24***a*, **24***b* can be used to convert digital output signals generated by the receive path DSP **23** into analog output signals that can be provided to one or more additional transceivers electrically coupled to the transceiver **10** on the host side via transmission lines.

Although FIG. **1**A illustrates one example of a transceiver that can include one or more features disclosed herein, the teachings herein can be employed in a wide variety of other electronic systems, including for example, other configurations of transceivers.

FIG. **1**B is a schematic diagram of another embodiment of a transceiver **30**. The transceiver **30** of FIG. **1**B is similar to the transceiver **20** of FIG. **1**A, except that the transceiver **30** further includes a transmit path tunable laser **31**, a receive path tunable laser **32**, an optical modulator **33**, and an optical demodulator **34**.

The illustrated transceiver **30** can be used to communicate over an optical cable on the line side, such as a fiber-optic cable.

For example, the transmit path tunable laser **31** can be used to generate an optical carrier signal for the optical modulator **33**. Additionally, the DAC **14** can be used to provide a transmit signal, which the optical modulator **33** can modulate with the optical carrier signal to generate an optical transmit signal (OPTICAL TX) that can be transmitted over an optical cable connected on the line side. In certain configurations, the DAC **14** can be used to output data representing in-phase and quadrature phase (I/Q) components of horizontal and vertical polarizations of the optical transmit signal. As shown in FIG. **1**B, the optical demodulator **34** can receive an optical receive signal (OPTICAL RX) over the optical cable. The optical demodulator can **34** can further receive an optical carrier signal from the receive path tunable laser **32**, which the optical demodulator **34** can use to demodulate the optical receive signal. The demodulated signal can be provided to the receive path equalizer **21** for equalization.

Although FIG. **1**B illustrates one example of an optical transceiver, the teachings herein are applicable to a wide variety of optical transceivers.

Additional details of the transceiver **30** can be similar to those described earlier.

FIG. **1**C is a schematic diagram of another embodiment of a transceiver **40**. The transceiver **40** includes a first transmit path equalizer **11***a*, a second transmit path equalizer **11***b*, a third transmit path equalizer **11***c*, a fourth transmit path

equalizer **11***d*, a first transmit path CDR circuit **12***a*, a second transmit path CDR circuit **12***b*, a third transmit path CDR circuit **12***c*, a fourth transmit path CDR circuit **12***d*, a first transmit path FFE/DFE block **15***a*, a second transmit path FFE/DFE block **15***b*, a third transmit path FFE/DFE block **15***c*, a fourth transmit path FFE/DFE block **15***d*, a transmit path PCS block **16**, a first transmit path FIR **17***a*, a second transmit path FIR **17***b*, a first transmit path DAC **14***a*, a second transmit path DAC **14***b*, a first receive path equalizer **21***a*, a second receive path equalizer **21***b*, a first receive path CDR circuit **22***a*, a second receive path CDR circuit **22***b*, a first receive path FFE/DFE block **25***a*, a second receive path FFE/DFE block **25***b*, a receive path PCS block **26**, a first receive path FIR **27***a*, a second receive path FIR **27***b*, a third receive path FIR **27***c*, a fourth receive path FIR **27***d*, a first receive path DAC **24***a*, a second receive path DAC **24***b*, a third receive path DAC **24***c*, and a fourth receive path DAC **24***d*.

In the illustrated configuration, the transceiver **40** receives four differential transmit signals on the host side. For example, the first transmit path equalizer **11***a* receives a first host side differential transmit signal TXA+, TXA−, the second transmit path equalizer **11***b* receives a second differential transmit signal TXB+, TXB−, the third transmit path equalizer **11***c* receives a third differential transmit signal TXC+, TXC−, and the fourth transmit path equalizer **11***d* receives a fourth differential transmit signal TXD+, TXD−. Additionally, the illustrated transceiver **40** generates two differential transmit signals on the line side. For example, the first transmit path DAC **14***a* generates a first differential transmit signal TX**1**+, TX**1**−, and the second transmit path DAC **14***b* generates a second differential transmit signal TX**2**+, TX**2**−.

Accordingly, the illustrated configuration provides a 4:2 multiplexing or parallel-to-serial SerDes operation of the transmit data. Although the illustrated embodiment provides a 4:2 multiplexing operation, the transceiver **40** can receive more or fewer host side transmit signals and/or generate more or fewer line side transmit signals.

Additionally, in the illustrated configuration, the transceiver **40** receives two differential receive signals on the line side. For example, the first receive path equalizer **21***a* receives a first line side differential receive signal RX**1**+, RX**1**−, and the second receive path equalizer **21***b* receives a second line side differential receive signal RX**2**+, RX**2**−. Additionally, the illustrated transceiver **40** generates four differential receive signals on the host side. For example, the first receive path DAC **24***a* generates a first differential receive signal RXA+, RXA−, the second receive path DAC **24***b* generates a second differential receive signal RXB+, RXB−, the third receive path DAC **24***c* generates a third differential receive signal RXC+, RXC−, and the fourth receive path DAC **24***d* generates a fourth differential receive signal RXD+, RXD−.

Accordingly, the illustrated configuration provides a 2:4 de-multiplexing or serial-to-parallel SerDes operation of the receive data. Although the illustrated embodiment provides a 2:4 de-multiplexing operation, the transceiver **40** can receive more or fewer line side receive signals and/or generate more or fewer host side receive signals.

In certain configurations, a transceiver provides multiplexing and/or de-multiplexing operations that are configurable or programmable. For example, in certain implementations, the transceiver **40** can operate using a flexible host-side interface that can be configured between 4:1, 4:2, 2×2:1 (dual 2:1), or 2:2 modes of operation. Configuring a transceiver in this manner can aid in achieving, for instance, flexible NRZ signaling at data rates in the range of 5 Gbps to 28 Gbps. Although one example of configurability has been described, other configurations are possible.

The transceiver **40** can operate using a wide variety of signaling protocols. In one example, both the host side and line sides can operate using NRZ signaling. In another example, the host side can operate using NRZ signaling and the line side can operate using PAM-4 signaling. However, other configurations are possible.

The illustrated configuration operates using differential signaling on the host and line sides. Using differential signaling can improve performance in a variety of ways, including, for example, enhancing performance in the presence of common-mode noise and/or systematic offsets or errors. In certain configurations, a particular differential signal is transmitted or received over a pair of differential micro coaxial cables or conductors. In certain configurations, two or more pairs of differential micro coaxial conductors can be housed in a shared cable. Various examples of such cables will be described in detail further below with reference to FIGS. **3**A-**3**C. Although various examples of cabling have been described, other configurations are possible, including, for example, other implementations of electrical cables and/or implementations using optical cables.

Additional details of the transceiver **40** can be similar to those described earlier.

FIG. **1**D is a schematic diagram of another embodiment of a transceiver **50**. The transceiver **50** includes a first transmit path equalizer **11***a*, a second transmit path equalizer **11***b*, a third transmit path equalizer **11***c*, a fourth transmit path equalizer **11***d*, a first transmit path CDR circuit **12***a*, a second transmit path CDR circuit **12***b*, a third transmit path CDR circuit **12***c*, a fourth transmit path CDR circuit **12***d*, a first transmit path FFE/DFE block **15***a*, a second transmit path FFE/DFE block **15***b*, a third transmit path FFE/DFE block **15***c*, a fourth transmit path FFE/DFE block **15***d*, a first transmit path PCS block **16***a*, a second transmit path PCS block **16***b*, a third transmit path PCS block **16***c*, a fourth transmit path PCS block **16***d*, a first transmit path FIR **17***a*, a second transmit path FIR **17***b*, a third transmit path FIR **17***c*, a fourth transmit path FIR **17***d*, a first transmit path DAC **14***a*, a second transmit path DAC **14***b*, a third transmit path DAC **14***c*, a fourth transmit path DAC **14***d*, a first receive path equalizer **21***a*, a second receive path equalizer **21***b*, a third receive path equalizer **21***c*, a fourth receive path equalizer **21***d*, a first receive path CDR circuit **22***a*, a second receive path CDR circuit **22***b*, a third receive path CDR circuit **22***c*, a fourth receive path CDR circuit **22***d*, a first receive path FFE/DFE block **25***a*, a second receive path FFE/DFE block **25***b*, a third receive path FFE/DFE block **25***c*, a fourth receive path FFE/DFE block **25***d*, a first receive path PCS block **26***a*, a second receive path PCS block **26***b*, a third receive path PCS block **26***c*, a fourth receive path PCS block **26***d*, a first receive path FIR **27***a*, a second receive path FIR **27***b*, a third receive path FIR **27***c*, a fourth receive path FIR **27***d*, a first receive path DAC **24***a*, a second receive path DAC **24***b*, a third receive path DAC **24***c*, and a fourth receive path DAC **24***d*.

The illustrated transceiver **50** operates as a re-timer. For example, the transceiver **50** can retime one or more transmit signals received on the host side to generate one or more transmit signals on the line side. Similarly, the transceiver **50** can re-time one or more receive signals received on the line side to generate one or more receive signals on the host side. Re-timing signals on the host and/or line signals can reduce

or remove high-frequency jitter in the signals, thereby improving signal fidelity and/or permitting communication over longer distances.

In the illustrated configuration, the transceiver **50** receives four host side differential transit signals, which are retimed to generate four line side differential transmit signals. Additionally, the illustrated transceiver **50** receives four line side differential receive signals, which are retimed to generate four host side differential receive signals. Although the transceiver **50** is illustrated as retiming four transmit signals and four receive signals, the teachings herein are applicable to configurations in which a transceiver retimes more or fewer transmits signals and/or more or fewer receive signals.

Additional details of the transceiver **50** can be similar to those described earlier.

Although FIGS. **1**A-**1**D illustrate various examples of transceivers, the teachings herein are applicable to other systems or apparatus, including, for example, other configurations of transceivers. A wide variety of electrical and optical transceiver configurations supporting different data rates are possible. Here are some non-limiting examples:

- A 40 Gbit/s re-timer that re-times four host-side 10 Gbit/s NRZ lanes into four re-timed line-side 10 Gbit/s NRZ lanes.
- A 40 Gbit/s transceiver that multiplexes four host-side 10 Gbit/s NRZ lanes into a single 40 Gbit/s PAM-4 line-side lane.
- A 50 Gbit/s transceiver that multiplexes two 25 Gbit/s host-side NRZ lanes into a single PAM-4 50 Gbit/s line-side lane.
- A 100 Gbit/s transceiver that multiplexes four host-side 25 Gbit/s NRZ lanes into two 50 Gbit/s PAM-4 line-side lanes.
- A 100 Gbit/s transceiver that multiplexes four host-side 25 Gbit/s NRZ lanes into two 50 Gbit/s PAM-4 line-side lanes.
- A 100 Gbit/s transceiver that multiplexes four host-side 25 Gbit/s NRZ lanes into a single 100 Gbit/s PAM-4 line-side lanes.
- A 200 Gbit/s re-timer that re-times eight host-side 25 Gbit/s NRZ lanes into eight re-timed line-side 25 Gbit/s NRZ lanes.
- A 200 Gbit/s transceiver that multiplexes eight host-side 25 Gbit/s NRZ lanes into four 50 Gbit/s line-side PAM-4 lanes.
- A 400 Gbit/s transceiver that multiplexes sixteen 25 Gbit/s host-side NRZ lanes into eight 50 Gbit/s PAM-4 line-side lanes.
- A 400 Gbit/s transceiver that converts eight 50 Gbit/s PAM-4 host-side lanes into four 100 Gbit/s PAM-4 line-side lanes.

While only the egress/transmit direction of data transmission is referred to in the above examples, it will be appreciated that the transceivers have both egress/transmit and ingress/receive paths. For instance, each of the transceivers described above as implementing a multiplexing function in the egress/transmit direction will be capable of performing a corresponding demultiplexing function in the ingress/receive direction to generate the appropriate number of host-side lanes, as described herein. Any of the above transceivers can be used to support either optical or electrical signal transmission. While the above examples are provided for the purposes of illustration, a wide variety of other configurations including those supporting additional data rates are possible. For instance, various implementations can be capable of operation at one or more of 20 Gbit/s, 25 Gbit/s, 28 Gbit/s, 32 Gbit/s, 40 Gbit/s, 50 Gbit/s, 56 Gbit/s, 64 Gbit/s, 100 Gbit/s, 112 Gbit/s, 128 Gbit/s, 200 Gbit/s, 224 Gbit/s, 256 Gbit/s, 400 Gbit/s, and 448 Gbit/s, and/or be capable of operation at data rates greater than any of these amounts, or rates between any of the foregoing rates. Listed data rates in some cases may correspond to effective payload data rates, not including certain overhead. For instance, a device with a listed data rate of 50 Gbit/s may actually be capable of a total data rate of 56 Gbit/s including 6 Gbit/s of overhead.

FIG. **2**A is a schematic diagram of a high-speed point-to-point communication system **100** according to one embodiment. The communication system **100** includes a first electronic device **101***a* and a second electronic device **101***b* electrically connected to one another via a cable **110**.

The communication system **100** of FIG. **2**A illustrates an implementation of a high-speed communication link between first and second electronic devices **101***a*, **101***b*, which can also be referred to herein as host devices. In various implementations, the first and second electronic devices **101***a* and **101***b* can include one or more of a mobile computing device (e.g., a smart phone or a tablet), a personal computing device (e.g., a laptop, a desktop, a notebook), a workstation, a supercomputer, a peripheral device (e.g., a mouse, a keyboard, a joystick, a digital camera, a video camera, a webcam, a monitor, a display device, a speaker, a microphone, a printer, a scanner, a gaming system, an internet router, a hub, a network router, a port expansion device, an electronic switching device, a printed circuit board, a storage device (e.g., an external hard drive), an input/output interface device (e.g., read/write device, DVD player), a voice-over-IP device, etc.

FIG. **2**A illustrates an embodiment in which the cable **110** is an active cable including actively powered componentry for improving performance of the cable **110**. Thus, the cable **110** shown in FIG. **2**A includes one or more conductive lines **111** as well as first and second transceiver assemblies **105***a*, **105***b* positioned at either end of the conductive lines **111**. For example, the first transceiver assembly **105***a* includes a host side that is electrically connected to the first electronic device **101***a* and a line side that is electrically connected to a first end of the conductive lines **111**. Additionally, the second transceiver assembly **105***b* includes a host side that is electrically connected to the second electronic device **101***b* and a line side that is electrically connected to a second end of the conductive lines **111**.

Although FIG. **2**A illustrates a configuration including the conductive lines **111**, in other configurations the conductive lines **111** can be omitted in favor of communication using an optical cable.

The first and second transceiver assemblies **105***a*, **105***b* can be implemented in a variety of ways. For example, the first and second transceiver assemblies include first and second transceivers **107***a*, **107***b*, respectively, which can be implemented using, for example, any of the embodiments of transceivers described earlier with respective to FIGS. **1**A-**1**D.

FIG. **2**B is a schematic diagram of a high-speed point-to-point communication system **120** according to another embodiment.

In contrast to the communication system **100** shown in FIG. **2**A which includes an active cable **110**, the communication system **120** of FIG. **2**B includes a passive cable **115**. As shown in FIG. **2**B, active componentry including the transceivers **107***a*, **107***b* is situated externally to the cable **115**. For example, the first transceiver assembly **105***a* can be

included in the first electronic device **101***a*, and the second transceiver assembly **105***b* can be included in the second electronic device **101***b*.

Accordingly, the illustrated configuration includes transceivers that are external to a cable. Thus, the teachings herein are applicable both to configurations in which one or more transceivers are integrated into a cable and to configurations in which one or more transceivers are located external to a cable.

Integrating transceivers into a cable can achieve a wide variety of advantages. For example, at a given bit rate, an active cable can permit communication over longer distance and/or with a thinner cable relative to a passive cable. Additionally, using an active cable can decrease jitter, noise, and/or ISI relative to a configuration using a passive cable. However, certain applications can use passive cables, for instance, to lower cable cost. For example, some passive cable configurations can be used in backplane applications.

Although FIGS. **2**A and **2**B illustrate two embodiments of high-speed communication links using cables, the teachings herein are also applicable to configurations in which point-to-point communications occur in other ways. In such configurations, the conductive lines **111** may be formed or otherwise included on a printed circuit board or other appropriate substrate instead of a cable. Thus, in such configurations, the conductive lines **111** can represent, for example, circuit board microstrip trace, PCB trace, and/or backplane trace, such as a conductive trace on FR-4 material.

In the embodiments shown in FIGS. **2**A and **2**B, each of the transceiver assemblies **105***a* and **105***b* includes a transceiver. For example, the first transceiver assembly **105***a* includes the first transceiver **107***a*, and the second transceiver assembly **105***b* includes the second transceiver **107***b*. In certain configurations, the first and second transceivers **107***a*, **107***b* are enclosed in a packaging. In certain configurations, each of the transceivers can be a monolithic device including analog and digital components included in a single integrated circuit (IC), for example, or may instead include multiple integrated circuits, depending on the embodiment.

In various implementations, the packaging can have a design and a form factor similar to the packaging defined by an existing interface standard (e.g., Thunderbolt Gen1/Gen2 or USB 2.0/3.0), although the packaging can have some other form factor. The packaging can comprise materials suitable for electronic and computer interfaces, such as plastic, metal or a composite material. Each of the transceiver assemblies **105***a* and **105***b* has an input port that is configured to mechanically and electrically connect, e.g., in a releasable fashion, to a corresponding port or other interface on the respective electronic device **101***a*, **101***b*, and an output port that is connected to the cable. The input port can include a connector similar to connectors of existing interface standards, including, but not limited to, Thunderbolt, USB 2.0/3.0, small form-factor pluggable (SFP), enhanced small form-factor pluggable (SFP+), and/or quad small form-factor pluggable (QSFP).

More than two electronic devices (e.g., 3, 4, 5, 6, or more devices) can be daisy chained together in some cases through the use of additional cables and transceivers. In one such example, the first electronic device **101***a* is a laptop or other personal computer, the second electronic device **101***b* is a television or other display device, and a third electronic device is a disk drive or other storage device. The television has a second port (not shown) configured to accept a connector of a third transceiver (not shown). The third transceiver is connected via a second cable (not shown) to a port on the hard disk drive.

In certain embodiments, the transceiver assemblies **105***a* and **105***b* implement an egress path by: (a) receiving at least two differential signals from a host device; (b) digitally re-timing, conditioning, and multiplexing the received differential signals; and (c) transmitting the multiplexed signal as a multi-level modulated signal (e.g., PAM-4) over the cable.

In certain embodiments, the transceiver assemblies are further configured to implement an ingress path by: (a) receiving a multi-level modulated signal (e.g., PAM-4) from the cable; (b) digitally conditioning and de-multiplexing the received multi-level modulated signal; and (c) transmitting the de-multiplexed signals as an analog signal to the host device.

In various implementations, the cable **110** of FIG. **2**A and/or the cable **115** of FIG. **2**B can include one or more electrical conducting lines **111** that can transport electrical signals between the first electronic device **101***a* and the second electronic device **101***b*. However, the teachings herein are also applicable to other configurations, such as configurations in which data is communicated optically between transceivers.

The conducting lines **111** can include metal (e.g., copper) conductors, for example. In some implementations, the conducting lines **111** can alternatively or additionally include one or more other types of conductors, such as one or more optical fibers that can transport optical signals. As indicated, the conducting lines **111** in alternative embodiments are not housed within a cable, and can instead reside on a PCB or other substrate.

The conducting lines **111** can include one or more sets of paired lines configured for differential signaling, which in some implementations include one or more sets of paired micro coaxial cables. However, other types of conducting lines **111** are possible. For example, shielded or unshielded twisted pair cables can be used in addition to any other appropriate type of cables, such as those that can support different data and video protocols (e.g., Serial ATA, Infiniband, PCI Express, DisplayPort I/O protocols, gigabit Ethernet, etc.).

Differential signaling is advantageously used according to certain embodiments to provide enhanced noise immunity via common-mode noise rejection, for example, among other benefits. As used herein, the term "differential" is used to describe a pair of conducting lines **111** (e.g., length matched conducting lines) being used to carry differential, e.g., complementary signals. The paired lines may in some cases be separately shielded, but nonetheless used to communicate a differential signal. For instance, as is described further herein, a pair of separately shielded micro coaxial cables can be used to transmit a differential signal. Such signal lines may or may not be balanced with respect to one another, depending on the embodiment.

While certain embodiments advantageously incorporate and are described for the purposes of illustration as implementing differential signaling, the techniques herein are compatible with and can be incorporated into systems that use single-ended signaling. For example, an individual signal line or singled-ended signal can be compared to an un-paired ground or other reference voltage.

In various implementations, the cable **110** of FIG. **2**A and/or the cable **115** of FIG. **2**B can be configured to transport data rates greater than 10 Gbit/s (e.g., 20 Gbit/s, 25 Gbit/s, 28 Gbit/s, 32 Gbit/s, 40 Gbit/s, 50 Gbit/s, 56 Gbit/s,

64 Gbit/s, 100 Gbit/s, 112 Gbit/s, 128 Gbit/s, 200 Gbit/s, 224 Gbit/s, 256 Gbit/s, 400 Gbit/s, and 448 Gbit/s or greater than any of these amounts, or rates between any of the foregoing values, etc.). In various implementations, the cable can have a length between about 0.5 m to about 10 m, for example, a length of about 2 m, about 3 m, about 4 m, about 5 m, about 6 m, about 7 m, about 9 m, or a length between the foregoing values, etc. In other implementations, the cable has a length greater than 10 m, for example, a length of about 10-15 m, about 15-20 m, about 20-30 m, about 30-50 m, about 50-100 m, or lengths between the foregoing, etc. In some embodiments, the cable **110** has a length of greater than 100 m. Thus, the length of the cable **110** of FIG. **2**A and/or the cable **115** of FIG. **2**B can depend on a variety of factors, including, for example, application, communication speed, signaling protocols, and/or operating environment.

In various implementations, the cable **110** of FIG. **2**A and/or the cable **115** of FIG. **2**B can be configured to support communication between the first electronic device **101***a* and the second electronic device **101***b* in either simplex mode, half-duplex mode or full-duplex mode. For example, the cable can include at least two channels/lanes, and each channel/lane can include a first paired differential cable for communication in a first direction and a second paired differential cable for communication in a second direction. A paired differential cable as discussed herein includes a pair of wires, each wire configured to transport a signal that that is equal or substantially equal in amplitude but opposite in polarity or phase. Accordingly, a differential paired cable can transport a differential signal including a p-channel and an n-channel, the p-channel and the n-channel being equal in amplitude but opposite in polarity or phase.

In addition to the paired differential lines, various implementations of cables can include power lines configured to supply power from one of the electronic devices **101***a* and **101***b* to the another electronic device. A cable can also include additional data or signal lines to transmit and receive data, control lines to transmit and receive control or handshake signals and one or more ground lines, etc., all of which may be used for transmitting data at substantially lower data rates than the paired differential lines.

FIGS. **3**A-**3**C illustrate cross-sectional views of different implementations of a cable. The cross-sections can correspond to implementations of the cable **110** of FIG. **2**A and/or the cable **115** of FIG. **2**B. The cables shown in FIGS. **3**A-**3**C are capable of transporting differential signals.

FIG. **3**A illustrates a cross-sectional view of one embodiment of a cable **131**.

The illustrated cable **131** includes a first pair of conducting lines **141** and a second pair of conducting lines **142**. Each of the pairs of conducting lines **141**-**142** can be configured for differential signal transmission. For instance, the individual conducting lines in the pair can be implemented coaxially in certain embodiments. In the illustrated embodiment, each pair of conducting lines **141**-**142** includes a first micro coaxial cable **143***a* and a second micro coaxial cable **143***b*. In the depicted embodiment, each of the micro coaxial cables includes an inner conductor **144** and an outer conductor **145**. An insulating material or a dielectric **146** is disposed between the inner conductor **144** and the outer conductor **145**. In various implementations, the insulating material or dielectric **146** can include a polymer or a fluoroplastic material.

In the illustrated configuration, the cable **131** further includes a pair of power lines including a first power line **147***a* and a second power line **147***b*. Additionally, the cable **131** includes a pair of control lines including a first control line **148***a* and a second control line **148***b*. Furthermore, the cable **131** further includes a ground line **149**.

In various implementations, one or more of the first pair of conducting lines **141**, the second pair of conducting lines **142**, the pair of power lines **147***a*-**147***b*, the pair of control lines **148***a*-**148***b*, and the ground line **149** are at least partially insulated. For example, in the illustrated configuration, a jacket **150** has been used to enclose the first pair of conducting lines **141**, the second pair of conducting lines **142**, the pair of power lines **147***a*-**147***b*, the pair of control lines **148***a*-**148***b*, and the ground line **149**. The jacket **150** can be implemented in a variety of ways, and can include, for example, a polymer, fluoroplastic, and/or PVC. In certain configurations, a micro coaxial cable includes inner and outer conductors (for example, the micro coaxial cable **143***a* includes the inner conductor **144** and the outer conductor **145**) implemented using a fine gauge wire. In some embodiments, the first and second micro coaxial cables **143***a*, **143***b* share a common ground reference.

In certain configurations, a cable includes at least one logical channel in each direction. For example, in the embodiment shown in FIG. **3**A, the upper pair **141** of micro coaxial cables can be used to transmit a first differential signal in a first direction, forming a first logical channel, and the lower pair **142** of micro coaxial cables can be used to transmit a second differential signal in the opposite direction, forming a second logical channel. The first direction can correspond to an egress/transmit direction and the second direction can correspond to an ingress/receive direction, or vice versa.

Although FIG. **3**A illustrates an embodiment of a cable that includes a specific configuration of signal and power lines, other embodiments are possible, including, for example, cables that include different numbers of logical channels and/or physical wires.

For example, FIG. **3**B illustrates a cross-sectional view of another embodiment of a cable **132**. The cable **132** includes eight individual conducting lines **151**, which can be, for example, micro coaxial cables. As depicted by the dashed lines, according to some embodiments, each of the conducting lines **151** can be paired with another of the conducting lines **151** to form a differential pair, and a single corresponding logical channel. For example, the cable **132** can include a first pair of conducting lines **161**, a second pair of conducting lines **162**, a third pair of conducting lines **163**, and a fourth pair of conducting lines **164**.

Thus, the illustrated embodiment can include four logical channels (e.g., two in each direction) each represented by a corresponding pair of the conducting lines **151**. As shown in FIG. **3**B, each conducting line **151** can include an inner conductor **144** surrounded by an outer conductor **145**. In various implementations, a dielectric can be disposed between the inner conductor **144** and the outer conductor **145**, as was described earlier with respect to FIG. **3**A. In various implementations, one or more of the conducting lines **151** can include insulation and/or a shield. The implementation depicted in FIG. **3**B further includes a pair of insulated power lines including a first power line **157***a* and a second power line **157***b*, a pair of insulated control lines including a first control line **158***a* and a second control line **158***b*, and a pair of insulated ground lines including a first ground line **159***a* and a second ground line **159***b*. The pairs of the conducting lines **161**-**164**, the pair of insulated power lines **157***a*-**157***b*, the pair of insulated control lines **158***a*-**158***b*, and the pair of ground lines **159***a*-**159***b* can be shielded by a shield **165** and enclosed in a jacket **166**. In certain configurations, the shield can be implemented as a

braided shield, and the jacket **166** can include a polymer, fluoroplastic and/or PVC. However, other configurations are possible.

Micro coaxial cables can exhibit relatively stable and reliable data transmission, support relatively high speeds, and have a relatively low-profile form factor as compared to other types of cabling. Other types of coaxial cables can have similar advantages and can be used in certain embodiments. For example, a cable can include twinaxial cables ("Twinax"), where each Twinax cable includes two inner conductors instead of a single inner conductor. In such cases, the two inner conductors can be configured to implement differential signaling.

In some other implementations, shielded or unshielded twisted pair cabling can be used.

FIG. **3**C illustrates a cross-sectional view of another embodiment of a cable **133**. The illustrated cable **133** includes two twisted pairs of conducting lines including a first twisted pair **171** and a second twisted pair **172**. Each of the twisted pairs **171-172** includes a pair of conductors **174**, such as copper conductors. The pair of conductors **174** can be surrounded by an insulating material **175**. In various embodiments, each of the twisted pairs **171-172** can be shielded by a shield, such as a shield similar to the shield **165** of FIG. **3**B. In other configurations, the twisted pairs **171-172** can be unshielded.

In some implementations, the two twisted pairs **171-172** of cables can be enclosed in a jacket **176**, such as a polymer, fluoroplastic and/or a PVC jacket.

In certain implementations, the cable **133** illustrated in FIG. **3**C can include power lines, ground lines and/or control lines as discussed above with reference to FIGS. **3**A-**3**B. Additionally, although the cable **133** is illustrated as including two twisted pairs, the cable **133** can be modified to include more or fewer twisted pairs.

Depending on the embodiment, the cables **131-133** of FIGS. **3**A-**3**C can include a wide variety of cable types. For example, a cable can include any of the following types of cables, without limitation: Category ("Cat") 5, Cat5e, Cat6, Cat6a, Class F, and Class Fa.

FIG. **4**A illustrates an example of a communication system **200** including a first transceiver **10***a* connected to another similar transceiver **10***b* by a cable **205**. The first and second transceivers **10***a*, **10***b* are implemented in a manner similar to that of the transceiver **10** of FIG. **1**A, with differential signaling used on the host and line sides of the transceivers.

Although the communication system **200** of FIG. **2**A is shown as including transceivers similar to the transceiver **10** of FIG. **1**A, other configurations are possible. For example, any of the transceivers shown in FIGS. **1**A-**1**D can communicate with one another over a cable.

As shown in FIG. **4**A, the first and second transceivers **10***a*, **10***b* have a host side for facing an electronic device and a line side for facing the cable **205**. For example, with reference back to FIG. **2**A, the first transceiver **10***a* can communicate with a first electronic device **101***a* and the second transceiver **10***b* can communicate with a second electronic device **101***b*. Thus, the transceivers **10***a*, **10***b* each include an egress path configured to transport signals from an electronic device towards the cable **205** and an ingress path configured to transport signals from the cable **205** to the electronic device. For example, the first transceiver **10***a* includes an egress path for transmitting signals from a first electronic device to the cable **205** and an ingress path for providing signals received over the cable **205** to the first electronic device. Similarly, the second transceiver **10***b* includes an egress path for transmitting signals from a second electronic device to the cable **205** and an ingress path for providing signals received over the cable **205** to the second electronic device.

The transceivers **10***a*, **10***b* depicted in FIG. **4**A each include a first pair of input interfaces **211***a*-**211***b* and a second pair of input interfaces **212***a*-**212***b* on the electronic device or host side of the egress path. Each pair of input interfaces **211***a*-**211***b*, **212***a*-**212***b* is configured to receive a differential signal including a p-channel and an n-channel from an electronic device. In various implementations, the differential signal received from the electronic device can have a data rate between about 400 Mbits/s and about 32 Gbit/s. However, other configurations are possible.

In certain configurations, the differential signal received from an electronic device by a transceiver can be, for example, an NRZ or other binary coded signal. However, other modulation formats are possible, including, but not limited to, PAM-4, 8 level PAM (PAM-8), 16 level PAM (PAM-16), and/or duobinary modulation. In certain configurations, the differential signals received by a transceiver on the host side can be a baseband signal.

As shown in FIG. **4**A, the transceivers **10***a*, **10***b* each include a first pair of output interfaces **213***a*-**213***b* and a second pair of output interfaces **214***a*-**214***b* on the electronic device side of ingress path. Each pair of output interfaces **213***a*-**213***b*, **214***a*-**214***b* is configured to transmit a differential signal including a p-channel and n-channel to an electronic device connected to the host side. In some embodiments, the pairs of output interfaces each transmit a differential signal utilizing the same data rate and encoding scheme as the pairs of input interfaces on the electronic device side of the egress path. For instance, each differential signal can be a baseband signal and can have a data rate of between about 400 Mbits/s and about 32 Gbit/s.

In certain configurations, a transceiver sends data to an electronic device on the host side using differential signals transmitted using an NRZ or other binary coded signal. However, other modulation formats are possible.

Although the implementation depicted in FIG. **2**B illustrates two pairs of input and output interfaces on the host side, the teachings herein are applicable to transceivers having more than two pairs of input and/or output interfaces. For example, the transceivers **10***a*, **10***b* in one embodiment have four pairs of input and output interfaces, although other numbers are possible including three, eight, twelve or sixteen pairs of input and output interfaces, for example.

The first and second transceivers **10***a*, **10***b* depicted in FIG. **4**A each further include a pair of output interfaces **215***a*-**215***b* on the cable or line side of the egress path. The pair of output interfaces **215***a*-**215***b* is configured to output a differential signal including a p-channel and an n-channel to the cable **205**. The differential signal output from the output interfaces **215***a*-**215***b* of a particular transceiver is transmitted through the cable **205** to another transceiver connected to the other end of the cable **205**, which in turn is connected to another electronic, computing, storage or peripheral device.

In the illustrated configuration, the output differential signal from the pair of output interfaces **215***a*-**215***b* can be generated by multiplexing the input differential signals received at the input interfaces **211***a*-**211***b*, **212***a*-**212***b*. Accordingly, the data rate of the differential signal output from the output interfaces **215***a*-**215***b* can be higher than a data rate of either of the input differential signals received at the first pair of input interfaces **211***a*-**211***b* or the second pair of input interfaces **212***a*-**212***b*.

In various implementations, the differential signal output from the output interfaces **215***a*-**215***b* can have a data rate between about 800 Mbits/s and about 128 Gbit/s. In one embodiment, the differential signal output from the output interfaces **215***a*-**215***b* is a PAM-4 modulated signal. However, other modulation formats can be used, including, for example, NRZ, PAM-8, PAM-16, duobinary modulation, PSK, and/or DSPK. In various implementations, the differential signal output from the output interfaces **215***a*-**215***b* can be a baseband signal.

As shown in FIG. **4**A, the first and second transceivers **10***a*, **10***b* each further include a pair of input interfaces **216***a*-**216***b* on the cable side of the ingress path that are configured to accept or receive a differential signal including a p-channel and an n-channel from the cable **205**. The differential signal received at the pair of input interfaces **216***a*-**216***b* is a multiplexed signal from another transceiver connected to the other end of the cable **205**. The transceiver can be configured to de-multiplex the differential signal received at the pair of input interfaces **216***a*-**216***b* and transmit it as outgoing differential signals from the pair of output interfaces **213***a*-**213***b*, **214***a*-**214***b* to an electronic device connected on the host side. Accordingly, the differential signal received at the pair of input interfaces **216***a*-**216***b* can have a data rate higher than the data rate of differential signals outputted from the pair of output interfaces **213***a*-**213***b* or the pair of output interfaces **214***a*-**214***b*.

In various implementations, the differential signal received at the input interfaces **216***a*-**216***b* can have a data rate between about 800 Mbits/s and about 128 Gbit/s. In one embodiment, the differential signal received at the input interfaces **216***a*-**216***b* is a PAM-4 modulated signal. However, other modulation formats can be used, including, for example, NRZ, PAM-8, PAM-16, duobinary modulation, PSK, and/or DSPK. In various implementations, the differential signal received at the input interfaces **216***a*-**216***b* can be a baseband signal.

Additional details of the communication system **200** can be similar to those described earlier.

FIG. **4**B illustrates a portion of the communication system **200** of FIG. **4**A including the first transceiver system **10***a*.

As shown in FIG. **4**B, the first transceiver **10***a* includes, along the egress path from the electronic device side to the cable side, a pair of equalizers **11***a*-**11***b*, a pair of CDR circuits **12***a*, **12***b*, a DSP **13**, and a DAC **14**. The equalizers **11***a*-**11***b* can compensate for cable loss, and in some cases is configured to perform one or more other functions, such as balancing the amplitude and/or frequency characteristics between the p- and n-channels.

The CDR circuits **12***a*-**12***b* can digitize the incoming signals as well as to implement timing recovery to recover a clock and a data signal from the incoming differential signals. Embodiments of the CDR circuits **12***a*-**12***b* are described in greater detail below. The presence of the clock and data recovery circuits **12***a*-**12***b* in the transceiver **10***a* allows the transceiver **10***a* to operate without requiring a high quality external reference clock. This can result in reduced complexity, cost savings, lower power consumption, and/or other benefits and advantages.

As is described in detail herein, in some embodiments, the CDR circuits **12***a*-**12***b* recover the clock and data signals in the digital domain. To recover clock and data signals digitally, the CDR circuits **12***a*-**12***b* can include analog to digital converters (ADCs). For example, a dedicated ADC can be used to recover the clock signal, and can have a lower number of bits than a separate data ADC used to recover a data signal. Use of separate ADCs in clock and data recovery paths advantageously allows a CDR circuit to recover a clock signal faster than a conventional analog clock recovery circuit. Thus, the CDR circuits described herein can exhibit reduced latency. For example, in various implementations, a CDR circuit can perform timing recovery, such as recovering timing information from the incoming data stream, within a few tens or hundreds of nanoseconds. In one embodiment, the latency of the CDR is about 4 ns, and the CDR has a time constant of about 10 ns.

In some arrangements, the recovered digital clock and data signals from the CDR circuits **12***a*-**12***b* are input to the DSP **13** for further processing. The DSP **13** can include one or more digital filters (e.g., a finite impulse response (FIR) filter), one or more delay blocks, a feed-forward equalizer (FFE) and/or decision feedback equalizer (DFE) and/or one or more first-in-first-out (FIFO) buffers and can generally be configured to condition and multiplex the digital data signal to a multiplexed signal at a higher bit-rate than the bit-rate of the incoming differential signals. The DSP **13** can include one or more FIR filters (e.g., a five tap FIR filter with tap coefficients S5.3, S7.3, S8.3, S7.3, S5.3) to generate symbol sequence for the multiplexed signal corresponding to a desired modulation format.

The DSP **13** can also include a mapper that determines the signal components for the multiplexed signal according to the desired modulation format. In one preferred implementation, the transceiver is configured to output the multiplexed signal as a 4-level pulse amplitude modulation (PAM-4) encoded differential signal. However, any other suitable modulation format such as for example, NRZ, duobinary, DPSK, PSK, etc. can be used in other implementations. The output of the DSP **13** is converted to an analog signal by the DAC **14** before being output to the cable **205** shown in FIG. **4**A.

While not shown explicitly, certain portions of the egress path can include multiple parallel instantiations of their respective componentry, respectively. For example, parallel instantiations of componentry can be included for each of the parallel egress signal paths, for instance, in a manner similar to the transceivers described further below. As indicated, the DSP **13** may implement a multiplexing function, and in such cases may generally only include parallel instantiations of componentry up until the point of multiplexing, which can occur in a physical coding sublayer (PCS) of the DSP **13** in certain embodiments.

As shown in FIG. **4**B, the first transceiver **10***a* further includes, along the ingress path from the cable side to the electronic device side, an equalizer **21**, a CDR circuit **22**, a DSP **23**, and a pair of DACs **24***a*, **24***b*. The equalizer **21** can be configured to compensate for losses occurring during transmission over the cable, and can also be configured to perform other functions, such as balancing the amplitude and/or frequency characteristics between the p- and n-channels of the incoming differential signal. The equalizers **21** can comprise analog equalizing filters, for example.

In some embodiments, the CDR circuit **22** is configured to digitize the incoming signals as well as to implement timing recovery to recover a clock and a data signal from the incoming differential signals. The CDR circuit **22** can be similar to the CDR circuits **11***a*, **11***b* in certain configurations. However, other implementations are possible. In one embodiment, the CDR circuit **22** recovers clock and data signals in the digital domain. To recover clock and data signals digitally, in some arrangements, the CDR circuit **22** includes analog to digital converters (ADCs).

In some implementations, the digital clock and data signals from the CDR **22** are input to the DSP **23** for further

processing. The DSP **23** can include one or more digital filters, such as a finite impulse response (FIR) filter, one or more delay blocks, a feed-forward equalizer (FFE) and/or a decision feedback equalizer (DFE), a thresholder, and/or one or more first-in-first-out (FIFO) circuits that are configured to condition and de-multiplex the digital data signal to a plurality of de-multiplexed signal at a lower bit-rate than the bit-rate of the incoming differential signals.

In various implementations, the DSP **23** can also include one or more FIR filters and de-mapper to determine the signal components for the de-multiplexed data signal according to the desired modulation format. In some embodiments, the transceiver is configured to output the de-multiplexed signal as a differential signal encoded as NRZ format. However, any other suitable modulation format can be used in other implementations. The output of the DSP **23** is converted to an analog signal by the DACs **24***a*, **24***b* before being transmitted to the electronic device.

In the illustrated configuration, the DSP **13** of the egress path includes a first feed-forward equalizer and/or decision feedback equalizer (FFE/DFE) block **15***a*, a second FFE/DFE block **15***b*, a PCS block **16**, and a finite impulse response (FIR) filter **17**. Additionally, in the illustrated configuration, the DSP **23** in the ingress path includes an FFE/DFE block **25**, a PCS block **26**, a first FIR filter **27***a*, and a second FIR filter **27***b*. Thus, the DSP **23** can include componentry implementing similar functionality to the componentry in the egress path.

FIG. **4**B also illustrates that the transceiver **10***a* can include parallel instances of certain componentry, allowing for the processing of separate channels independently. For example, there are generally multiple instances of the DSP **13** componentry that reside in the egress path prior to the multiplexing function performed by the PCS block **16**. In the illustrated configuration, the transceiver **10***a* includes multiple instances of the equalizers **11***a*-**11***b*, the CDR circuits **12***a*-**12***b*, and the FFE/DFE blocks **15***a*-**15***b*. Similarly, there can be multiple instances of the DSP **23** componentry that reside in the ingress path subsequent to the de-multiplexing function performed by the PCS block **26**. In the illustrated configuration, the transceiver **10***a* includes multiple instances of the FIR filters **27***a*, **27***b* and the DACs **24***a*, **24***b*.

Referring to the DSP **13** componentry in the egress path, the FFE/DFE blocks **15***a*-**15***b* can implement one or more digital filters configured to equalize the incoming signal and compensate for channel effects including pre-and post-cursor ISI. The filters can include an FFE and/or a DFE, for example.

The PCS block **16** performs one or more processing functions on the incoming data streams that can include, without limitation, framing, scrambling, error correction, and/or mapping. The PCS block **16** can implement a multiplexing function in which the PCS block **16** combines a first number of incoming data channels into a smaller number of outgoing data channels. The multiplexing can be achieved using an encoding scheme, for instance, in which the PCS block **16** maps incoming data having a first coding scheme into a second coding scheme having a higher resolution. For instance, in one embodiment, the PCS block **16** receives multiple data channels (e.g., 2, 4, or more data channels) encoded using a two level encoding scheme (e.g., NRZ) and maps the data channels into a single outgoing PAM-4 data channel.

The FIR filter **17** can include one or more finite impulse response (FIR) filters, and is generally configured to receive the multiplexed signal, condition the signal, and forward the processed signal to the DAC **14**. For example, FIR filters can be used to perform emphasis on the signal to compensate for channel losses. Although illustrated as including the FIR filters, the DSP **13** can include additional processing componentry that can be used to further process signals. For example, the DSP **13** can be used to perform a de-emphasis function, e.g., to compensate for losses in the channel that are larger at certain (e.g., higher) frequencies.

The DSP **23** in the ingress path can include componentry that is similar to the DSP **13** in the egress path. However, because the data stream received from the line by the ingress path is already multiplexed and is transmitted over a different physical channel than the signals received on the egress path, the DSP **23** componentry in the ingress path can differ in certain ways from the DSP **13** componentry in the egress path. For instance, because the incoming data stream(s) is multiplexed, there may be a reduced number of instances of the FFE/DFE block **25** as compared to the DSP **13** componentry in the egress path. In the illustrated embodiment, the data is multiplexed to a single logical channel, and there is only one instance of the FFE/DFE block **25** in the ingress path.

Moreover, the PCS block **26** in the ingress path is configured to de-multiplex the incoming data channel(s), generally undoing the multiplexing function performed in the egress path. For instance, where NRZ and PAM-4 coding are used on the host and line side, respectively, the PCS block **26** maps the received PAM-4 signal to two or more NRZ data channels. To handle the de-multiplexed output of the PCS block **26**, there may be multiple instances of the FIR filters **27***a*-**27***b* and/or additional signal processing componentry—e.g., one corresponding to each data channel. In contrast to the FIR filters **27***a*-**27***b* of the DSP **23** that handle de-multiplexed data, the FIR filter **17** of the DSP **13** handles multiplexed data.

Additional details of the transceiver **10***a* can be similar to those described earlier.

FIG. **5** is a schematic diagram of another embodiment of a transceiver **250**. The transceiver **250** includes a first transmit path host-side front-end module (FEM) **251***a*, a second transmit path host-side FEM **251***b*, a third transmit path host-side FEM **251***c*, a fourth transmit path host-side FEM **251***d*, a first transmit path FFE/DFE **255***a*, a second transmit path FFE/DFE **255***b*, a third transmit path FFE/DFE **255***c*, a fourth transmit path FFE/DFE **255***d*, a transmit path PCS block **256**, a transmit path first in first out (FIFO) buffer **257**, a transmit path line-side FEM **258**, a receive path line-side FEM **281**, a receive path FFE DFE **285**, a receive path PCS block **286**, a receive path FIFO buffer **287**, and a receive path host-side FEM **288**.

As shown in FIG. **5**, the first transmit path host-side FEM **251***a* includes a first transmit path equalizer **11***a* and a first transmit path CDR circuit **252***a*, which includes a first automatic gain controller or thresholder **261***a*, a first ADC **262***a*, a first clock recovery circuit **263***a*, and a first controllable oscillator **264***a*. Additionally, the second transmit path host-side FEM **251***b* includes a second transmit path equalizer **11***b* and a second transmit path CDR circuit **252***b*, which includes a second thresholder **261***b*, a second ADC **262***b*, a second clock recovery circuit **263***b*, and a second controllable oscillator **264***b*. Furthermore, the third transmit path host-side FEM **251***c* includes a third transmit path equalizer **11***c* and a third transmit path CDR circuit **252***c*, which includes a third thresholder **261***c*, a third ADC **262***c*, a third clock recovery circuit **263***c*, and a third controllable oscillator **264***c*. Additionally, the fourth transmit path host-side FEM **251***d* includes a fourth transmit path equalizer **11***d* and a fourth transmit path CDR circuit **252***d*, which includes a

fourth thresholder **261***d*, a fourth ADC **262***d*, a fourth clock recovery circuit **263***d*, and a fourth controllable oscillator **264***d*.

The illustrated transmit path line-side FEM **258** includes a transmit path DAC **14**, a multiplexer **276** and a phase-locked loop (PLL) **277**. Additionally, the receive path line-side FEM **281** of FIG. **5** includes a receive path equalizer **21** and a receive path CDR circuit **282**, which includes a thresholder **291**, an ADC **292**, a clock recovery circuit **293**, and a controllable oscillator **294**. Furthermore, the illustrated receive path host-side FEM **288** includes a multiplexor **296**, a PLL **297**, and a plurality of receive path DACs **24** including a first receive path DAC **24***a*, a second receive path DAC **24***b*, a third receive path DAC **24***c*, and a fourth receive path DAC **24***d*.

The transceiver **250** can be included in a communication link. For example, the transceiver **250** can be included in the communication systems depicted in FIGS. **2**A and **2**B. Certain details of the transceiver **250** can be similar to those described earlier.

As shown in FIG. **5**, the transceiver **250** has a host side facing an electronic device, and a line side facing a cable. In the illustrated configuration, the transceiver **250** includes four pairs of input interfaces disposed on the host side of the egress path. Each pair of input interfaces can be configured to receive a differential signal including a p- and an n-channel from the electronic device to which it is connected. For example, in the illustrated configuration, the first transmit path equalizer **11***a* receives a first host side differential transmit signal TXA+, TXA−, the second transmit path equalizer **11***b* receives a second differential transmit signal TXB+, TXB−, the third transmit path equalizer **11***c* receives a third differential transmit signal TXC+, TXC−, and the fourth transmit path equalizer **11***d* receives a fourth differential transmit signal TXD+, TXD−.

In various implementations, the differential signal input to each pair of input interfaces on the host side can have a data rate between about 400 Mbits/s to about 32 Gbit/s. The differential signals input to each pair of input interfaces on the electronic device side carry NRZ modulated data in some embodiments. In other cases, other modulation formats other than NRZ can be used such as, for example, duobinary, PAM, DPSK, PSK, etc.

The transmit path PCS block **256** can be used to multiplex the plurality of input differential signals and generate a multiplexed differential signal that is provided as a differential output on the cable side of the egress path. In various implementations, the multiplexed differential signal can have a data rate between about 800 Mbits/s and about 128 Gbit/s. In certain embodiments, the multiplexed differential signal has a PAM-4 modulation format, although other formats are possible (e.g., NRZ, PAM-8, PAM-16, duobinary, PSK, DPSK, etc.).

In the illustrated configuration, the transceiver **250** includes four pairs of output interfaces disposed on the host side of the ingress path. In some embodiments, each pair of output interfaces is configured to output a differential signal including a p- and an n-channel to the electronic device to which it is connected. For example, in the illustrated configuration, the first receive path DAC **24***a* generates a first host side differential receive signal RXA+, RXA−, the second receive path DAC **24***b* generates a second host side differential receive signal RXB+, RXB−, the third receive path DAC **24***c* generates a third host side differential receive signal RXC+, RXC−, and the fourth receive path DAC **24***d* generates a fourth host side differential receive signal RXD+, RXD−.

In various implementations, the differential signal output from each pair of the output interfaces on the host side can have a data rate between about 400 Mbits/s to about 32 Gbit/s. In various implementations, the differential signals output from each pair of output interfaces on the electronic device side can include NRZ modulated data. In certain embodiments, the multiplexed differential signal has a PAM-4 modulation format, although other formats are possible (e.g., NRZ, PAM-8, PAM-16, duobinary, PSK, DPSK, etc.).

Although FIG. **5** illustrates a configuration in which a transceiver receives four differential transmit signals on the host side and generates four differential receive signals on the host side, the teachings herein are applicable to configurations in which a transceiver receives more of fewer transmit signals on the host side and/or generates more or fewer receive signals on the host side.

The receive path PCS block **286** can be used to demultiplex the input multiplexed differential signals received from the cable side input interfaces along the ingress path into the plurality of output differential signals transmitted to the host/electronic device side along the ingress path. In various implementations, the input multiplexed differential signal can have a data rate between about 800 Mbits/s and about 128 Gbit/s. The differential signals input to each pair of input interfaces on the electronic device side carry NRZ modulated data in some embodiments. In other cases, other modulation formats other than NRZ can be used such as, for example, duobinary, PAM, DPSK, PSK, etc.

As shown in FIG. **5**, four transmit path or egress host-side FEMs **251***a*-**251***d* have been included in the transceiver **250**. Each of the egress host-side FEMs **251***a*-**251***d* is coupled to one of the four pairs of input interfaces and configured to receive an input differential signal from the pair of input interfaces to which it is coupled.

In the illustrated configuration, the first CDR circuit **252***a* includes the first transmit path thresholder **261***a*, which can be used to control a gain or signal level of an equalized signal generated by the first transmit path equalizer **11***a*. The first transmit path thresholder **261***a* can aid in providing gain control in a variety of applications. The first ADC **262***a* can be used to convert an analog output of the first transmit path thresholder **261***a* into a digital output signal, which can correspond to digital data recovered from the first host side differential transit data signal TXA+, TXA−. The first clock recovery circuit **263***a* can be used to analyze the digital data generated by the first ADC **262***a* to control the clock signal generated by the first controllable oscillator **264***a*. The first clock recovery circuit **263***a* can be used to control the first controllable oscillator **264***a* to align a sampling clock signal of the ADC **262***a* to a unit interval of the first host side differential transit data signal TXA+, TXA−. The second to fourth CDR circuits **252***b*-**252***d* can operate in a manner similar to that of the first CDR circuit **252***a*.

Although the transceiver **250** of FIG. **5** illustrates a particular configuration of CDR circuits, the teachings herein are applicable to other configurations of CDR circuits. For example, as will be discussed further herein, a CDR circuit can include separate ADCs for data and timing recovery. Accordingly, in certain configurations, one or more of the CDR circuits of FIG. **5** can include a data recovery ADC and a separate clock recovery ADC.

Each of the transmit path host-side FEMs **251***a*-**251***d* outputs a digital data signal and a digital clock signal recovered from respective input differential signals applied to the FEMs. In various implementations, the ADC **262***a* can be omitted in favor of including a first or data recovery ADC

for digitizing the data signal and a second or clock recovery ADC dedicated to clock recovery. In certain configurations, the first ADC can have at least 3 bits, and the second ADC has a lower number of bits, e.g., at least 2 bits. In one embodiment, the first ADC is a 7-bit ADC, and the second ADC is a 2-bit ADC.

As shown in FIG. **5**, the first transmit path FFE/DFE **255***a* receives a first recovered data signal and a first recovered clock signal from the first transmit path host-side FEM **251***a*. Additionally, the second transmit path FFE/DFE **255***b* receives a second recovered data signal and a second recovered clock signal from the second transmit path host-side FEM **251***b*. Furthermore, the third transmit path FFE/DFE **255***c* receives a third recovered data signal and a third recovered clock signal from the third transmit path host-side FEM **251***c*. Additionally, the fourth transmit path FFE/DFE **255***d* receives a fourth recovered data signal and a fourth recovered clock signal from the fourth transmit path host-side FEM **251***d*.

The recovered data and clock signals from the transmit path host-side FEMs **251***a*-**251***d* can be conditioned using the FFE/DFEs **255***a*-**255***d*, which can include one or more feed forward equalizers (FFEs) and/or decision feedback equalizers (DFEs). The FFE/DFEs **255***a*-**255***d* can be configured to reduce the amount of signal distortion resulting from ISI or other signal impairments.

As shown in FIG. **5**, the equalized recovered clock and data signals from the FFE/DFEs **255***a*-**255***d* are provided to the transmit path PCS block **256**, which performs a multiplexing function. For instance, in one embodiment, the transmit path PCS block **256** in a first operational mode translates two 20 Gbit/s NRZ data streams into a PAM-4 40 Gbit/s stream and in a second operational mode translates four 10 Gbps NRZ streams into a PAM-4 40 Gbit/s stream. The transmit path PCS block **256** can be configured to implement a variety of functions including framing, error correction (e.g., forward error correction), scrambling, etc.

For example, the transmit path PCS block **256** can be configured to perform one or more of the following: align the frames of the incoming data signals to be multiplexed; encode the incoming data signals and/or the multiplexed data signals using error-correcting codes to control errors in the transported data; scramble the incoming data signals and/or the multiplexed data signals for encryption purposes, etc. As shown in FIG. **5**, the transmit path PCS block **256** can provide a multiplexed data signal and a clock signal to the transmit path FIFO buffer **257**. Additionally, an output of the transmit path FIFO buffer **257** is provided to the transmit path line-side FEM **258**.

The illustrated transmit path line-side FEM **258** includes the multiplexor **276**, which can be used to select a clock input to the PLL **277** by selecting between a reference clock signal CLK_{REF} and a clock outputted from one of the transmit path host-side FEMs, such as the fourth transmit path host-side FEM **251***d*. The PLL **277** can be used to generate a DAC clock signal for controlling the transmit path DAC **14** based on the clock signal selected by the multiplexor **276**. In particular, the PLL **277** can control timing of transmissions of the transmit path DAC **14** along a cable by locking the phase and frequency of the DAC clock signal to the clock signal selected by the multiplexor **276**. The DAC clock signal is also provided to the transmit path FIFO buffer **257** to control data buffering operations, such as controlling timing of data outputted from the buffer.

Including the multiplexor **276** can enhance the flexibility of the transceiver **250** by permitting timing of transmissions along the cable to be selectively controlled using either the reference clock signal CLK_{REF} or a clock signal recovered from an input data stream on the host-side. In certain configurations, the reference clock signal CLK_{REF} is a free-running clock signal.

In the illustrated embodiment, the transceiver **250** includes an ingress or receive path line-side FEM **281** that receives a line side differential receive signal RX**1**+, RX**1**−, which can correspond to a multiplexed differential signal transmitted by another transceiver attached to the other end of the cable.

The receive path line-side FEM **281** includes the receive path equalizer **21** and the receive path CDR circuit **282**. The receive path CDR circuit **282** includes the thresholder **291**, the ADC **292**, the clock recovery circuit **293**, and the controllable oscillator **294**, and can operate in a manner similar to that described earlier. Although the receive path CDR circuit **282** is illustrated as including a single ADC, in certain configurations the receive path CDR circuit **282** can include separate ADCs for data and timing recovery in a manner similar to that described further below.

As shown in FIG. **5**, the receive path line-side FEM **281** is configured to output a digital data signal and a digital clock signal recovered from the line side differential receive signal RX**1**+, RX**1**−. Although illustrated as including one ADC **292**, in certain configurations the receive path line-side FEM **281** can include a first ADC for digitizing the data signal and a second ADC dedicated to clock recovery. In certain implementations, the first ADC can have at least 3 bits, and the second ADC can have a lower number of bits, e.g., at least 2 bits.

In the illustrated configuration, the receive path FFE/DFE **285** receives a recovered data signal and a recovered clock signal from the receive path line-side FEM **281**. In a manner similar to that discussed above, the FFE/DFE **285** can reduce signal distortion resulting from ISI or other signal impairments.

The digital data and clock signal output from the receive path FFE/DFE **285** is de-multiplexed by the receive path PCS block **286**. The receive path PCS block **286** can also perform functions that include de-framing, error correction (e.g., forward error correction), un-scrambling, etc.

As shown in FIG. **5**, the receive path PCS block **286** can provide a multiplexed data signal and a clock signal to the receive path FIFO buffer **287**. Additionally, an output of the receive path FIFO buffer **287** is provided to the receive path host-side FEM **288**.

The illustrated receive path host-side FEM **288** includes the multiplexor **296**, which can be used to select a clock input to the PLL **297** by selecting between a reference clock signal CLK_{REF} and a clock outputted from one of the transmit path host-side FEMs, such as the fourth transmit path host-side FEM **251***d*. The PLL **297** can be used to generate one or more DAC clock signals for controlling the receive path DACs **24***a*-**24***d* based on the clock signal selected by the multiplexor **296**. As shown in FIG. **5**, the PLL **297** also provides one or more DAC clock signals to the receive path FIFO buffer **287** to control data buffering operations.

Various implementations of the transceiver **250** discussed herein can include a mode selector **299** which can allow configuration of the transceiver for different modes of operation. The mode selector **299** can allow selection between multiplexing incoming differential signals coming from all of the inputs on the electronic device/host side or a subset of the incoming differential signals. For example, to transport a differential signals having a data rate **4**B (e.g., 40 Gbit/s) over the cable **110**, the mode selector **299** can allow selec-

tion between multiplexing two incoming differential signals having a data rate **2**B (e.g., 20 Gbit/s) or multiplexing four incoming differential signals having a data rate B (e.g., 10 Gbit/s). In some cases, the mode selector **299** can automatically select the operation mode based on the electronic device to which it is connected.

The transceivers herein can be configured as a full-duplex multiplexer and re-timer with integrated signal conditioning capabilities for various cables capable of communicating data according to various protocols (e.g., Thunderbolt Gen1, Thunderbolt Gen2, SFP+ and/or QSFP capable cables). Implementations of transceivers can be configured to be backward compatible with existing interface standards (e.g., Thunderbolt Gen1, Thunderbolt Gen2, SFP+ and/or QSFP). The transceivers can be implemented as monolithic devices, which include, for example, integrated digital signal processors, ADCs and DACs. The ADCs and DACs are capable of processing signals in a wide range of data rates and encoded with different modulation formats including NRZ modulation and 4-level pulse amplitude modulated (PAM-4) modulation format.

Various implementations of the transceiver can serve as a fully rate and channel adaptive transceiver for a wide range of signals from the electronic devices. Various implementations of the transceivers also include adaptive and configurable signal conditioning features such as an integrated continuous time linear equalizer (CTLE), output pre-emphasis, self-adaptive digital equalization, by-passable forward error correction (FEC).

The transceivers herein can include an integrated serial port interface (SPI) management interface that can provide control over modes of operation, and access to built-in testing and monitoring components for diagnostic purposes. In certain embodiments, a transceiver can achieve error free or substantially error free operation over channels with up to 30 dB insertion loss thereby rendering it suitable for use with both twisted pair cables with a length of about 2 m and micro coaxial cables with a length of about 4 m. However, the transceivers herein can be configured to operate with different cable lengths. Various implementations of the transceivers have electronic device side interfaces that are capable of adaptive operation over high loss PCB channels permitting flexibility in board and connector design for low cost solutions. Furthermore, the use of ADCs and DACs enables to lower the amount of power consumed in various implementations of the transceiver. For example, the power consumed by various implementations of the transceiver can be lowered to about 750 mW for full-duplex 40 Gbit/s operation.

Example Method of Multiplexing and De-Multiplexing Analog Differential Signals

As discussed above, in certain configurations a transceiver can receive at least two pairs of differential input signals (e.g., 2, 4, 8, 16 or more pairs) from an electronic device (for example, the electronic device **101***a* of FIG. **2**A) along an egress path. Additionally, the transceiver can multiplex the two or more pairs of differential input signals to generate a serialized or multiplexed differential signal for transmission over a cable to another transceiver connected to the other end of the cable. By multiplexing the input signals, the transceiver can transport large amounts of data quickly, reliably and cost effectively with a fewer number of wires and/or cables. The multiplexed differential signal can operate at a higher bit-rate relative to an individual bit-rate of the incoming differential signals received on the host side of the transceiver.

The multiplexing function can advantageously reduce cabling costs and complexity. For example, multiplexing by a factor of 2:1 can allow replacement of two high speed line or wire pairs in each direction with one wire or line pair in each direction. As discussed above, the transceiver can recover clock and data signals from the at least two input differential signals using CDR circuits prior to multiplexing. Additionally, the input differential signals can be processed in other ways, such as by conditioning and/or equalization.

The transceiver can also receive an input multiplexed differential signal transmitted along the ingress path through the cable from another transceiver connected to the other end of the cable. The transceiver can recovers a clock signal and a data signal from the multiplexed differential signal using a CDR circuit. Additionally, the transceiver may provide equalization and/or conditioning of the recovered multiplexed data signals prior to de-multiplexing. The de-multiplexed data is converted into a plurality of analog differential signals and transmitted to the electronic device. One method of multiplexing and de-multiplexing is described below with reference to FIGS. **6**A and **6**B.

FIG. **6**A is a flowchart that illustrates an example method **300** of multiplexing at least two input analog differential signals received from an electronic device to a multiplexed analog differential signals. The method **300** includes receiving at least two input analog differential signals from an electronic device, as shown in block **301**. The method **300** further includes converting each input analog differential signal to a digital signal, as shown in block **302**. An analog to digital converter (ADC) can be used to convert the input analog differential signal to a digital signal. The method **300** further includes recovering digital clock and digital data signals from the converted digital signal, as shown in block **303**. In various implementations, a first ADC is used to digitize the received data signal, and a second, lower resolution ADC is used for clock recovery. For instance, the second ADC may be at least a 2-bit ADC and the first ADC may be at least a 3-bit ADC. In various implementations the first ADC is at least a 6-bit ADC or is at least a 7-bit ADC. The method **300** further includes conditioning and multiplexing the digital data signal, as shown in block **304**. The conditioning and multiplexing the data signal can be performed in the digital domain using digital signal processing. Programmable chip sets, physical coding sub-layer (PCS) blocks, FPGAs, FIR filters can be used to condition and multiplex the digital data signal. As discussed above, conditioning the data signals can include equalizing the data signals to reduce the effects of ISI, framing, error correction, scrambling, etc. The method **300** includes converting the multiplexed digital signal to an analog differential signal having a suitable modulation format at a higher data rate than the input analog differential signal and output the multiplexed analog differential signal into a cable, as shown in block **305**. The multiplexed analog differential signal can be an M-level pulse PAM signal (e.g., a 4-level PAM signal), an NRZ modulated signal or a signal with any other suitable modulation format.

FIG. **6**B is a flowchart that illustrates an example method **350** of de-multiplexing a multiplexed analog differential signal to at least two analog differential signals that are output to an electronic device. The method **350** includes receiving a multiplexed analog differential signal from a cable (e.g., a paired differential micro coaxial cable), as shown in block **351**. The method further includes converting the multiplexed analog differential signal to a digital signal, as shown in block **352**. An ADC stage can be used to convert the multiplexed analog differential signal to a digital signal,

and can also be used to perform timing recovery. The method **350** further includes recovering digital clock and digital data signals from the converted digital signal, as shown in block **353**. In various implementations, the ADC stage can include a first ADC used to convert the data signal, and a second ADC dedicated to timing recovery, where the second ADC is at least a 2-bit ADC and the second ADC is at least a 3-bit ADC. In various implementations the recovered first ADC is at least a 6-bit ADC or is at least a 7-bit ADC. The method **350** further includes conditioning and de-multiplexing the digital data signal, as shown in block **354**. The conditioning and de-multiplexing of the data signal can be performed in the digital domain using digital signal processing. In various implementations, programmable chip sets, FPGAs, PCS blocks, FIR filters can be used to condition and de-multiplex the digital data signal. As discussed above, conditioning the data signals can include equalizing the data signals to reduce the effects of ISI, de-framing, error correction, unscrambling, etc. The method **350** further includes converting the de-multiplexed digital signal to a plurality of de-multiplexed analog differential signals having a suitable modulation format at a lower data rate than the incoming signals and transmitting the de-multiplexed signals to an electronic device, as shown in block **355**.

Example NRZ and 4-Level PAM Signals

In an NRZ modulated signal, binary data is represented by two voltage levels. A first voltage level (e.g., +1 V) is used to represent 1's in the binary data and a second voltage level (e.g., −1V) is used to represent 0's in the binary data.

FIG. **7**A illustrates an eye-diagram **361** for an NRZ modulated data signal. The pulses in an NRZ modulated signal have more energy than pulses in a return-to-zero (RZ) modulated signal. Accordingly, NRZ modulated signals can have a higher signal-to-noise ratio as compared to RZ modulated signals. Moreover, NRZ signals can be processed with relatively lower complexity logic and less circuitry than RZ systems, allowing for reduced cost implementations that consume relatively less amounts of power.

In some implementations, the multiplexed differential signals output from the transceiver into a cable can be a 4-level pulse amplitude modulated (PAM-4) signal. In a PAM-4 modulation scheme two bits of binary data (a symbol) are assigned one of four possible signaling voltage levels. For example, the symbol 00 is represented by a first voltage level (e.g., −0.3V), the symbol 01 is represented by a second voltage level (e.g., −1V), the symbol 10 is represented by a third voltage level (e.g., +1V) and the symbol 11 is represented by a fourth voltage level (e.g., +0.3V).

FIG. **7**B illustrates an eye-diagram **362** for a PAM-4 modulated data signal in which the symbol 00 is represented by a voltage level of about −1V, the symbol 01 is represented by a voltage level of about −0.3V, the symbol 11 is represented by a voltage level of about +0.3V and the symbol 10 is represented by a voltage level of about +1V. Since a PAM-4 signal transmits two bits per symbol, it is capable of transporting more data than an NRZ signal at the same baud rate (e.g., number of symbols/second).

Examples of Clock and Data Recovery Circuits Using Separate Clock and Data Recovery ADCs

In certain configurations, a clock and data recovery (CDR) circuit with separate data recovery and clock recovery paths is provided. The CDR circuit includes a first or data recovery ADC, a second or clock recovery ADC, a timing control circuit, and a clock generation unit. Additionally, the data recovery ADC has a higher resolution than the clock recovery ADC, such that the digital output of the data recovery ADC has a higher resolution than the digital output of the clock recovery ADC. The CDR circuit receives an input signal, and the data recovery ADC samples the voltage of the input signal to generate a first or higher resolution digital output signal corresponding to a digital representation of the sample. Additionally, the clock recovery ADC samples the input signal to generate a second or lower resolution digital output signal, which the timing control circuit processes to generate a clock control signal. Additionally, the timing control circuit provides the clock control signal to the clock generation to control timing of analog-to-digital conversion operations of the data recovery ADC and the clock recovery ADC.

By including separate data recovery and clock recovery paths, the CDR circuit can operate with enhanced performance. For example, the data recovery ADC has a higher resolution than the clock recovery ADC, which allows for a digital data signal to be recovered from the input signal with higher accuracy. Although high resolution ADCs typically have a longer latency that a lower resolution ADC of similar circuit topology, the data recovery ADC operates outside of a clock recovery loop of the CDR circuit. Thus, the latency of the data recovery ADC should not impact the timing performance of the CDR circuit.

Accordingly, the CDR circuits herein can provide high resolution data recovery while maintaining a relatively fast lock time. Additionally, the CDR circuits herein can operate without a tradeoff between loop dynamics of a clock recovery loop and data resolution of recovered data. In contrast, certain conventional CDR circuits can exhibit a tradeoff between recovered data resolution and a delay or latency in locking the CDR circuit to an input signal.

Furthermore, a resolution of the data recovery ADC may be controlled or configured without impacting the CDR circuit's clock recovery loop. For example, in certain applications, it may be desirable for the data recovery ADC to have a resolution that is configurable, for instance, by an end-user. For example, a transceiver may include a serial peripheral interface (SPI) or other interface that can be used to configure the data recovery ADC to a resolution suitable for a particular application that the transceiver is being used in. In such configurations, changing the resolution of the data recovery ADC should not impact clock recovery speed, loop stability, and/or the ability of the CDR circuit to lock to the input signal. Furthermore the data recovered by the data recovery ADC can be filtered, equalized, and/or otherwise processed without interfering with clock recovery. Thus, the CDR circuits herein can operate with high flexibility and/or configurability without needing to compensate the CDR circuit's clock recovery loop for different data recovery modes, resolutions, and/or settings.

In certain configurations, the timing control circuit is implemented using digital logic circuitry, and thus operates without analog components. For example, in one embodiment, the timing control circuit generates the clock control signal based on the second digital output signal entirely in the digital domain. Implementing the timing control circuit digitally can provide a number of advantages, including, for example, lower cost, lower power consumption, and/or faster locking. For example, in some existing data transfer standards and protocols, the clock recovery bandwidth used is about (data rate)/1667. Thus, at relatively low data rates of, for example, about 10 Gbit/s, the clock recovery bandwidth is about 6 MHz, and an analog clock recovery circuit may be suitable. However, as data rates increase (for example, to 20 Gbit/s or more), implementing an analog clock recovery circuit becomes increasingly difficult and costly.

In some embodiments, the CDR circuit is included in a transceiver, such that the transceiver achieves relatively fast clock recovery with reduced latency. For example, the CDR circuits can operate in ingress paths and/or egress paths of the transceivers described herein. In one embodiment, a CDR circuit provides clock and data recovery to an input signal provide to the transceiver from a host device. In another embodiment, a CDR circuit provides clock and data recovery to an input signal received over a cable from another transceiver.

However, it is noted that implementations of the clock and data recovery circuits described herein are not limited for use in a networking transceiver, but can be generally used in other applications that require clock and data recovery circuits. For example, CDR circuits can be used in, for instance, telecommunication systems, optical networks, and chip-to-chip communications. It is also noted that implementations of the clock and data recovery circuits described herein are not limited for data rates greater than 10 Gbit/s but can be used at lower data rates as well. For example, the implementations of the clock and data recovery circuit described herein can be used at data rates, such as those ranging from about 100 Mbits/s to about 128 Gbit/s.

FIG. **8** is a schematic diagram of one embodiment of a CDR circuit **400**. The CDR circuit includes a first or data recovery ADC **401**, a second or clock recovery ADC **402**, a timing control circuit **403**, and a clock generation unit **404**. The CDR circuit **400** receives an input signal IN and generates an output signal OUT.

The input signal or stream IN can include serial data bits that transition at a data rate. At a given data rate, the input signal IN has a unit interval (UI), or minimum time interval between transitions of the input signal IN.

As shown in FIG. **8**, the data recovery ADC **401** receives the input signal IN and a sampling clock signal CLK_{SAMPLE}, and generates the output signal OUT. In response to a transition of the sampling clock signal CLK_{SAMPLE}, the data recovery ADC **401** controls a digital value of the output signal OUT based on analog voltage level of the input signal IN. In certain configurations, the data recovery ADC **401** can be configured to provide analog-to-digital conversion in response to rising edges of the sampling clock signal CLK_{SAMPLE} or in response to falling edges of the sampling clock signal CLK_{SAMPLE}. In such configurations, the CDR circuit **400** can lock a frequency of the sampling clock signal CLK_{SAMPLE} to a baud rate of the input signal IN. However, other configurations are possible, such as implementations in which the data recovery ADC **401** provides analog-to-digital conversion in response to both rising and falling edges of the sampling clock signal CLK_{SAMPLE}.

The clock recovery ADC **402** receives the input signal IN and the sampling clock signal CLK_{SAMPLE}, and provides a lower resolution digital output signal to the timing control circuit **403**. The lower resolution digital output signal generated by the clock recovery ADC **402** has a lower resolution than the digital output signal generated by the data recovery ADC **401**. The timing control circuit **403** processes the lower resolution digital output signal to generate a clock control signal, which is provided as an input to the clock generation unit **404**.

The timing control circuit **403** controls the clock generation unit **404** using the clock control signal, such as by controlling the phase and/or frequency of the sampling clock signal CLK_{SAMPLE}. For example, the timing control circuit **403** can process the lower resolution digital output signal so as to shift the sampling clock signal CLK_{SAMPLE} earlier or later in time to align the clock signal CLK_{SAMPLE} relative to the unit interval of the input signal IN.

In the illustrated configuration, a resolution of the data recovery ADC **401** is greater than a resolution of the clock recovery ADC **402**. For example, the output signal OUT from the data recovery ADC **401** can include n bits and the digital output signal from the clock recovery ADC **402** can include k bits, where n is greater than k. In one embodiment, n is selected to be in the range of 3 bits to 7 bits and k is selected to be in the range of 2 bits to 5 bits, where n is greater than k. Although one example of bit widths has been provided, different bit widths can be used depending on, for example, application, data rates, and/or signaling protocols.

The timing control circuit **403** can be implemented in a wide variety of ways. In certain configurations, the timing control circuit **403** is implemented using digital logic circuitry, and operates without analog components, such as charge-pumps and analog loop filters. In such configurations, the clock control signal provided to the clock generation unit **404** comprises a digital clock control signal. Implementing the timing control circuit **403** using digital circuitry can enhance loop stability, speed-up locking, and/or lower power consumption relative to an analog configuration. In one embodiment, the timing control circuit **403** comprises a Mueller-Muller phase detector.

The clock generation unit **404** can be implemented in a variety of ways, including for example, as a digitally controlled oscillator (DCO) or numerically controlled oscillator (NCO). In the illustrated configuration, the sampling clock signal CLK_{SAMPLE} is provided to both the data recovery ADC **401** and the clock recovery ADC **402**. Thus, the clock generation unit **404** controls the data recovery ADC **401** and the clock recovery ADC **402** using a common or shared clock signal in this embodiment. However, the teachings herein are also applicable to configurations in which the data recovery ADC **401** and the clock recovery ADC **402** are controlled using separate clock signals, including, for example, clock signals of different frequencies and/or phase offsets relative to one another.

FIG. **9**A is one example of a timing diagram **410** for the CDR circuit **400** of FIG. **8**. The timing diagram **410** includes a first plot of the input signal IN of FIG. **8** and a second plot of the sampling clock signal CLK_{SAMPLE} of FIG. **8**. The timing diagram **410** has been annotated to illustrate sampling times of a first analog-to-digital conversion sample **411** and a second analog-to-digital conversion sample **412**, as well as a unit interval (UI) of the input signal IN. As shown in FIG. **9**A, samples used for analog-to-digital conversion operations can be taken from near the center of the UI when the CDR circuit is locked to the input signal IN.

The timing diagram **410** illustrates a configuration in which ADCs provide analog-to-digital conversion on rising edges of the sampling clock signal CLK_{SAMPLE}. However, other configurations are possible, including, for example, implementations in which the ADCs operate in response to falling edges of sampling clock signal CLK_{SAMPLE}.

In the illustrated configuration, the CDR circuit **400** has been used to lock to an input signal that is in an NRZ format. However, the CDR circuits herein can be used to provide clock and data recovery to input signals of other formats.

FIG. **9**B is another example of a timing diagram **420** for the CDR circuit of FIG. **8**. The timing diagram **420** includes a first plot of the input signal IN of FIG. **8** and a second plot of the sampling clock signal CLK_{SAMPLE} of FIG. **8**. The timing diagram **420** has been annotated to illustrate sampling times of a first analog-to-digital conversion sample **421** and a second analog-to-digital conversion sample **422**,

as well as a unit interval (UI) of the input signal IN. As shown in FIG. **9**B, samples used for analog-to-digital conversion operations can be taken from near the center of the UI when the CDR circuit is locked to the input signal IN.

The timing diagram **420** illustrates a configuration in which ADCs provide analog-to-digital conversion on rising edges of the sampling clock signal CLK_{SAMPLE}. However, other configurations are possible, including, for example, implementations in which the ADCs operate in response to falling edges of sampling clock signal CLK_{SAMPLE}.

In the illustrated configuration, the CDR circuit **400** has been used to lock to an input signal that is in a PAM-4 format. However, the CDR circuits herein can be used to provide clock and data recovery to input signals of other formats.

FIG. **10** illustrates a schematic of an implementation of a clock and data recovery (CDR) system **500**. The CDR system **500** includes a continuous time linear equalizer (CTLE) **501**, a CDR circuit **502**, and an FFE/DFE **509**. The CDR circuit **502** includes the data recovery ADC **401** and clock recovery ADC **402**, which can be as described earlier. The CDR circuit **502** further includes a digital logic circuit or digital timing control circuit **511** and a digitally controlled oscillator (DCO) **507**.

The CDR system **500** can be used in a wide variety of systems. For instance, the CDR system **500** may be incorporated in any of the transceivers described herein, such as those shown and described with respect to FIGS. **1**A-**2**B and **4**A-**5**, for example. The CDR system **500** is configured to receive an input analog signal through an input interface. In some implementations, the input signal IN can be a differential signal including a p-channel and an n-channel. In other implementations, the input signal IN may not be a differential signal, and may instead be a single-ended signal. The input signal IN can be an NRZ modulated signal or PAM-4 signal, although other formats are possible including, for example, any of those described herein. In various implementations, the input analog signal IN can have a data rate between about 100 Mbits/s to about 300 Gbit/s.

In the illustrated configuration, the input signal IN is equalized to compensate for distortions using the CTLE **501**. The CTLE **501** can include an analog filter configured to compensate for certain signal losses caused by the channel.

The equalized output of the CTLE **501** can be provided as an input to the data recovery ADC **401** and as an input to the clock recovery ADC **402**. Thus the illustrated CDR system **500** includes separate data recovery and clock recovery paths. A first or data recovery path includes the first ADC **401** that recovers a digital data signal from the input signal. Additionally, a second or clock recovery path includes the second ADC **402** that generate a timing recovery signal from the input signal. In certain configurations, the timing recovery signal and digital data signal both correspond to digital representations of an analog voltage of the input signal, but the timing recovery signal has a lower bit resolution relative to the digital data signal.

In various implementations, one or more thresholders or automatic gain controllers (AGCs) (not shown in this figure) can be disposed in the first and/or second paths. For example, the transceiver **250** of FIG. **5** illustrates examples of thresholders that can be included in CDR circuits of a transceiver. The CDR system **500** further includes the digital controlled oscillator (DCO) **507**, which generates sampling clock signals used to control analog-to-digital conversion operations of the ADCs **401**-**402**. Although FIG. **10** illustrates a configuration in which the data recovery ADC **401** and the clock recovery ADC **402** receive separate clock signals, the teachings herein are also applicable to configurations in which the data recovery ADC **401** and the clock recovery ADC **402** operate using a common or shared clock signal.

In the illustrated configuration, the DCO **507** is disposed in a feed-back path of the clock recovery path. The phase and/or frequency of the clock signals generated by the DCO **507** are controlled by the digital logic block **511**. The digital logic block **511** can control the timing of the clock signals generated by the DCO **507** to align analog-to-digital conversion operations of the ADCs **401**-**402** relative to the unit interval of the input signal IN. In one embodiment, digital logic block **511** comprises a Mueller-Muller phase detector.

As shown in FIG. **10**, the digital output from the data recovery ADC **401** is input to the FFE/DFE **509** for further conditioning before being provided as the output signal OUT. In various implementations, the FFE/DFE **509** includes a feed-forward equalizer (FFE), a decision feedback equalizer (DFE), or a combination thereof.

In certain configurations, a recovered clock signal from the CDR circuit **502** is also provided as an output to the CDR circuit **502**. For instance, the CDR circuit **502** can provide a version (e.g., a divided down version) of the recovered clock and data to the CDR circuit **502** and/or other componentry of a transceiver. As an example, a divided down or other version of the recovered clock can additionally be sent for use as a reference to transmit componentry in the transceiver. As an example, the transceiver **250** of FIG. **5** illustrates a configuration in which a recovered clock signal is provided from a CDR circuit to other components of a transceiver.

In certain configurations, the ADCs **401** and **402** are configured to generate digital signals with about 2-8 bits, depending on the embodiment. Increasing the number of bits generated by the ADCs **401** and **402** can increase the resolution of the generated digital signals. However, increasing the number of bits can also increase the latency of the CDR system **500**. Since, it is desirable for the data signal to have a higher resolution, the first ADC **401** is configured to generate a digital signal having at least 3 bits (e.g., at least 4, 5, 6, 7, 8, 16 bits or higher). In some embodiments, the first ADC **401** can be configured to generate a 7 bit digital signal. Since, it is desirable to have fast clock recovery with low latency the second ADC **402** has a lower number of bits than the first ADC **401** and can be dedicated to generating a signal for use in timing recovery. In various implementations the second ADC **402** is at least a 2-bit ADC (e.g., a 2-bit, 3-bit or 4-bit ADC). The number of bits of the second ADC **402** is selected based on the desired latency for the clock recovery system and the desired resolution or accuracy for the clock signal. For example, in various implementations, the CDR system **500** can perform timing recovery within a few tens or hundreds of nanoseconds. For instance, within a few tens or hundreds of nanoseconds, the CDR system **500** can recover timing information from the incoming data. In one embodiment, the latency of the CDR system **500** is about 4 ns, and the CDR system **500** has a time constant of about 10 ns. The timing or clock recovery ADC **402** and the data ADC **401** can be selected such that the clock recovery ADC **402** has a latency that is significantly less than that of the data recovery ADC **401**, thereby improving timing recovery operation. The latency of the timing recovery ADC **402** can have a latency of about 3% to about 20% of the latency of the data ADC **401**. For example, the latency of the timing recovery ADC **402** can be about 5%, about 7%, about 9%, about 11%, about 13%, about 15%, or about 18% of the latency of the data recover ADC **401**, or some percentage

between any of the foregoing values. In some embodiments, the latency of the timing recovery ADC **402** is about 1 ns and the latency of the data ADC **401** is about 11 ns. In various other implementations, the timing recovery ADC **402** can have a latency that is less than 3% of the latency of the data recovery ADC **401** or more than 20% of the latency of the data recovery ADC **401**, e.g., about 1%, about 2%, between about 20%-30%, between about 30%-40%, or between about 40%-50%.

FIG. **11** is a flowchart that illustrates a method **600** of digitally recovering clock and data using the clock and data recovery system **500** depicted in FIG. **10**. The method **600** includes receiving an incoming analog signal, as shown in block **601**. The method **600** further includes generating a digital data signal including at least 3 bits from the incoming analog signal, as shown in block **612**. In various implementations, a first ADC can be used to generate the digital data signal, where the first ADC is at least a 3-bit ADC. The method **600** further includes using a second ADC having a lower number of bits than the first ADC to generate a signal for using in timing recovery, where the second ADC is at least a 2-bit ADC, as shown in block **603**. The method **600** further includes adjusting the output of a DCO or other clock generation unit controlled by a logic controller based on the generated clock signal, as shown in block **604**. In various implementations, the DCO can be disposed in a feed-back path to the second ADC. The method **600** can be implemented by any of the communication systems or transceivers described herein.

Examples of Systems to Detect and Correct Skew in Differential Signals

With reference back to FIGS. **2**A-**2**B, multiple conducting lines can be used to communicate data between two transceivers. However, the presence of skew between the conducting lines can degrade the receiver performance and/or cause transmission errors. Thus, it is advantageous to detect and correct skew to improve the receiver performance and to increase the reliability of data transmission. Skew can be particularly pronounced in embodiments including parallel micro coaxial cables and/or implementations achieving higher data rates. Certain embodiments described herein advantageously provide efficient skew compensation under such conditions. While some of the embodiments that will be described address skew in systems incorporating differential signaling over paired transmission lines (e.g., paired micro coaxial cables transmitting complementary differential signals), it will be appreciated that these techniques can also be applied to other systems.

In certain configurations, a communication system includes a first transceiver and a second transceiver electrically connected to one another by a cable. The first transceiver includes a differential transmitter used to transmit a differential signal to a differential receiver of the second transceiver via the cable. The first transceiver further includes a skew adjustment circuit and a skew control circuit. The skew control circuit generates a skew control signal, which the skew adjustment circuit uses to control timing of transmissions of a first transmitter of the differential transmitter relative to timing of transmissions of a second transmitter of the differential transmitter. The differential receiver includes a skew detector that generates a skew indication signal indicating a skew between a non-inverted component of the received differential signal relative to an inverted component of the received differential signal. The second transceiver transmits the skew indication signal to the first transceiver, and the skew control circuit processes the skew indication signal to control the skew adjustment circuit to reduce or eliminate skew in the differential signal received at the differential receiver.

Compensating for skew on the transmitter side of a communication system can enhance the communication system's performance relative to a configuration in which skew is compensated for on the receiver side. For example, including a skew adjustment circuit at the input of a differential receiver can introduce noise, increase ISI, and/or otherwise degrade signal integrity. For instance, a differential receiver can include a variable delay element for delaying a non-inverted component of a differential signal relative to an inverted component of the differential signal to compensate for skew. However, the variable delay element may have insufficient bandwidth to delay differential signals transmitted at high data rates and/or may provide a different amount of delay to different frequency components of the differential signal. Thus, a communication system that compensates for skew at the receiver side may have poorer performance, higher complexity, and/or higher cost.

In certain configurations, the skew adjustment circuit can compensate for skew by controlling a time difference or delay between a first clock signal used to control transmissions of the first transmitter and a second clock signal used to control transmissions of the second transmitter. By controlling a delay of the first clock signal relative to the second clock signal, the skew adjustment circuit can control the timing of transmissions of the first and second transmitters to reduce or eliminate skew in the differential signal received by the differential receiver. In certain implementations, the skew adjustment control circuit can additionally or alternatively be used to control a delay of a first data signal provided to the first transmitter relative to a second data signal provided to the transmitter.

Providing skew adjustment in this manner can reduce or eliminate skew while avoiding a need to place a variable delay element in a signal path between an output of the differential transmitter and an input to the differential receiver. Avoiding variable delay elements in between the differential transmitter's output and the differential receiver's input can aid in maintaining the benefits of differential signaling over the cable. Thus, the first and second transceivers can communicate with lower common-mode noise and/or smaller systematic offsets or errors. In contrast, a communication system that includes variable delay elements between a differential transmitter's output and a differential receiver's input may not exhibit the benefits of differential signaling. Rather, when operating at high speeds, the communication system may undesirably exhibit performance comparable to communications using single-ended signaling.

In certain configurations, the skew adjustment circuit can include two or more adjustment circuits including a coarse adjustment circuit and a fine adjustment circuit. Additionally, the coarse adjustment circuit can compensate for skew of the differential transmitter by controlling a delay between a first clock signal used to control transmissions of the first transmitter and a second clock signal used to control transmissions of the second transmitter. Furthermore, the fine adjustment circuit can compensate for skew of the differential transmitter by controlling a delay between a first data signal provided as input to the first transmitter and a second data signal provided as input to the second transmitter. Compensating for skew using multiple skew adjustment circuits can enhance accuracy of skew adjustment and/or permit skew correction when the skew has a relatively large magnitude.

In certain configurations, skew is corrected or compensated for during a start-up sequence or channel negotiation between the first and second transceivers. For example, a training sequence can be transmitted from the differential transmitter of the first transceiver to the differential receiver of the second transceiver, and the differential receiver's skew detector can generate the skew indication signal based on skew observations of the received training sequence. In certain configurations, the skew control circuit provides skew adjustment incrementally. For example, the skew control circuit can initially set a value of skew control signal, and wait for the skew indication signal to indicate an impact of the skew control signal's value on skew before further updating or changing the value of the skew control signal. In certain configurations, the skew control circuit first determines a setting of the coarse skew adjustment circuit before determining a setting of the fine skew adjustment circuit.

FIG. **12**A is a schematic diagram of a communication system **650** according to another embodiment. The communication system **650** includes a first transceiver **651** and a second transceiver **652** electrically connected to one another by a cable **653**.

The first transceiver **651** includes a differential transmitter **660** that includes a first transmitter **661** and a second transmitter **662**. The first transceiver **651** further includes a skew adjustment circuit **663**, a skew control circuit **664**, and a skew receiver **665**. Additionally, the second transceiver **652** includes a differential receiver **671**, and a skew transmitter **672**. Although not illustrated in FIG. **12**A for clarity of the figures, the first and second transceivers **651**-**652** can include additional structures, blocks, and/or circuitry. For example, in certain embodiments, the first and second transceivers can have a similar structure or topology to one another.

The skew adjustment circuit **663** receives a first or non-inverted data signal D**1**+, a first clock signal CLK**1**, a second or inverted data signal D**1**−, a second clock signal CLK**2**, and a skew control signal from the skew control circuit **664**. Additionally, the skew adjustment circuit **663** generates a first or non-inverted skew adjusted data signal D**1**+', a first skew adjusted clock signal CLK**1**', a second or inverted skew adjusted data signal D**1**−', and a second skew adjusted clock signal CLK**2**'. The skew adjustment circuit **663** can generate the first and second skew adjusted data signals D**1**+', D**1**−' and/or the first and second skew adjusted clock signals CLK**1**', CLK**2**' based on an amount of skew adjustment indicated by the skew control signal generated by the skew control circuit **664**.

For example, the skew adjustment circuit **663** can be used to control a time difference or delay between the first and second skew adjusted data signals D**1**+', D**1**-' relative to a time difference or delay between the first and second data signals D**1**+, D**1**−. Similarly, the skew adjustment circuit **663** can be used to control a delay between the first and second skew adjusted clock signals CLK**1**', CLK**2**' relative to a delay between the first and second clock signals CLK**1**, CLK**2**. As will be described in detail further below, the skew adjustment circuit **663** can be used to compensate for a skew of the differential transmitter **660** by controlling relative timing of transmissions of the first and second transmitters **661**, **662**.

Although FIG. **12**A illustrates a scheme in which the skew adjustment circuit **663** compensates for skew based on generating both skew adjusted clock signals CLK**1**', CLK**2**' and skew adjusted data signals D**1**+', D**1**−', the teachings herein are also applicable to configurations in which a skew adjustment circuit generates only skew adjusted clock signals or skew adjusted data signals.

In the illustrated configuration, the first transmitter **661** receives the first skew adjusted data signal D**1**+' and the first skew adjusted clock signal CLK**1**', and generates a first or non-inverted component of a differential signal TX**1**+, TX**1**−. Additionally, the second transmitter **662** receives the second skew adjusted data signal D**1**−' and the second skew adjusted clock signal CLK**2**', and generates a second or inverted component of the differential signal TX**1**+, TX**1**−.

The first transceiver **651** transmits the differential signal TX**1**+, TX**1**− to the second transceiver **652** over the cable **653**. Although the first transceiver **651** is illustrated as sending only one differential signal to the second transceiver **652**, the first transceiver **651** can be configured to send additional differential and/or single-ended transmit signals to the second transceiver **652**. Additionally, the first transceiver **651** can receive one or more differential and/or single-ended signals from the second transceiver **652**.

As shown in FIG. **12**A, the second transceiver **652** includes the differential receiver **671**, which receives the differential signal TX**1**+, TX**1**− from the first transceiver **652**. The differential receiver **671** includes a skew detector or skew detection circuit **673**, which can be used to generate a skew indication signal based on an observed difference of skew between the non-inverted component of the differential signal TX**1**+, TX**1**− relative to the inverted component of the differential signal TX**1**+, TX**1**−. Additionally, the differential receiver **671** can send the skew indication signal to the skew transmitter **672** of the second transceiver **652**, which in turn can transmit the skew indication signal to the skew receiver **665** of the first transceiver **661**. Furthermore, the skew receiver **665** can provide the skew indication signal to the skew control circuit **664**, which can process the skew indication signal to generate the skew adjustment signal for the skew adjustment circuit **663**.

Although the skew transmitter **672** can be used to transmit the skew indication signal and the skew receiver **665** can be used to receive the skew indication signal, the skew transmitter **672** and/or the skew receiver **665** can be used for additional functions. For example, in one embodiment, the skew transmitter **672** and the skew receiver **665** are also used during channel negation or start-up to transmit control and/or mode information.

In the illustrated configuration, the differential signal TX**1**+, TX**1**− and the skew indication signal are transmitted in a common cable **653**. For example, the non-inverted component of the differential signal TX**1**+, TX**1**− is transmitted on a first conducting line **654***a*, the inverted component of the differential signal TX**1**+, TX**1**− is transmitted on a second conducting line **654***b*, and the skew indication signal is transmitted on a third conducting line **655**. In one embodiment, the first and second conducting lines **654***a*, **654***b* comprise a pair of micro coaxial cables, such as the first and second micro coaxial cables **143***a*-**143***b* of the cable **131** of FIG. **3**A, and the third conducting line **655** comprises a control line, such as the control line **148***a* of FIG. **3**A. However, other configurations are possible, including, for example, implementations in which a differential signal and a skew indication signal are transmitted via separate cables or in other ways.

In certain configurations, the skew control circuit **664** compensates for skew of the differential transmitter **661** during a start-up sequence or channel negotiation between the first and second transceivers **651**-**652**. For example, a training sequence can be transmitted from the differential transmitter **660** of the first transceiver **651** to the differential

receiver **671** of the second transceiver **652**, and the skew indication signal can be generated by the skew detector **673** based on skew observations associated with the received training sequence. In certain configurations, the skew control circuit **664** provides skew adjustment incrementally. For example, the skew control circuit **664** can initially set a value of skew control signal, and wait for an update to the skew indication signal before further adjusting the skew control signal.

FIG. **12**B is a schematic diagram of a communication system **680** according to another embodiment. The communication system **680** includes a first transceiver **681** and a second transceiver **652** electrically connected to one another by a cable **653**.

The communication system **680** of FIG. **12**B is similar to the communication system **650** of FIG. **12**A, except that the communication system **680** of FIG. **12**B includes a different configuration of the first transceiver. For example, the first transceiver **681** includes a differential transmitter **690** that includes a first DAC **691** and a second DAC **692** used to transmit the differential signal TX**1**+, TX**1**− to the differential receiver **671** over the cable **653**. Additionally, the first transceiver **681** includes a clock generation unit **687** and a skew adjustment circuit **683** that includes a coarse skew adjustment circuit **688** and a fine skew adjustment circuit **689**. The first transceiver **681** further includes a skew control circuit **664** and a skew receiver **665**.

As shown in FIG. **12**B, the clock generation unit **687** generates a first clock signal CLK**1** and a second clock signal CLK**2**, which are provided as inputs to the fine skew adjustment circuit **689**. Additionally, the fine skew adjustment circuit generates a first skew adjusted clock signal CLK**1'** for controlling timing of the first DAC **691** and a second skew adjusted clock signal CLK**2'** for controlling timing of the second DAC **692**. Furthermore, the skew control circuit **664** generates a fine phase adjustment signal, which is used to control a time difference or delay between the first skew adjusted clock signal CLK**1'** and the second skew adjusted clock signal CLK**2'**.

With continuing reference to FIG. **12**B, the coarse skew adjustment circuit **688** receives the non-inverted data signal D**1**+ and the inverted data signal D**1**−. Additionally, the coarse skew adjustment circuit **688** generates a non-inverted skew adjusted data signal D**1**+' and an inverted skew adjusted signal D**1**-', which are provided as inputs to the first and second DACs **691**, **692**, respectively. Furthermore, the skew control circuit **664** generates a coarse phase adjustment signal, which is used to control a time difference or delay between the non-inverted skew adjusted data signal D**1**+' and the inverted skew adjusted data signal D**1**-'.

In certain configurations, the skew control circuit **664** corrects for skew during a start-up sequence or channel negotiation between the first transceiver **681** and the second transceiver **682**. Additionally, the differential transmitter **690** transmits a training sequence to the differential receiver **671** during the start-up sequence or channel negotiation. Furthermore, the skew detector **673** observes at least one of a magnitude or polarity of skew of the differential signal received at the differential receiver **671**, and generates the skew indication based on the skew observations. Additionally, the skew control circuit **664** incrementally adjusts the coarse skew adjustment signal until the skew observed by the skew detector **673** is at about the lowest observed skew value. Thereafter, the skew control circuit **664** incrementally adjusts the fine skew adjustment signal until the skew observed by the skew detector **673** is about the lowest observed skew value.

Additional details of the communication system **680** can be similar to those described earlier.

FIG. **13**A illustrates an implementation of a communication system **700** that can detect and correct skew between two channels, where each channel communicates a corresponding component of a differential signal. The communication system **700** includes a first electronic device **701** and a second electronic device **702**. In various implementations, the first electronic device **701** and/or the second electronic device **702** can comprise any of the transceivers discussed herein, such as the transceivers discussed above with respect to FIGS. **1**A-**1**D and **4**B-**5**, for example. The first and second electronic devices **701** and **702** can be connected by a transmission cable, for example, the cable **110** of FIG. **2**A or the cable **115** of FIG. **2**B.

The first electronic device **701** includes a pair of transmitters **703***a* and **703***b* that collectively operate as a differential transmitter. The first transmitter **703***a* generates a first or non-inverted transmit signal TXA+ and the second transmitter generates a second or inverted transmit signal TXA−. The first and second transmits signals TXA+, TXA− operate as a differential transmit signal that is transmitted from the first electronic device **701** to the second electronic device **702** over a cable. The first electronic device **701** further includes a receiver unit or skew receiver **665**, a skew control unit or circuit **664**, a coarse phase select unit **711**, a clock generation unit **709**, and a fine phase select unit **712**. The transmitters **703***a* and **703***b* are controlled based on a clock signal generated by a clock generation unit **709**. The fine phase select unit **712** adjusts the clock signal generated by the clock generation unit **709** to generate separate clock signals for the first and second transmitters **703***a*-**703***b*. For example, as shown in FIG. **13**A, the first transmitter **703***a* receives a first skew adjusted clock signal CLKA+ from the fine phase select unit **712** and the second transmitter **703***b* receives a second skew adjusted clock signal CLKA− from the fine phase select unit **712**.

In response to the feedback output provided by the skew control system **664**, the clock signal generated by the clock generation unit **709** can be phase adjusted in fine increments by the fine phase select unit **712**. In certain configurations, the clock signal generated by the clock generation unit **709** is phase adjusted in coarse increments by the coarse phase select **711**. However, other configurations are possible, such as implementations in which the coarse phase select **711** provides coarse phase adjustment by controlling a relative delay between data signals provided as inputs to the transmitters **703***a*-**703***b*.

In one embodiment, the coarse phase select unit **711** provides phase adjustment in increments of entire clock or symbol cycles (e.g., 1, 2, 5, 10, 100 or more cycles), while the fine phase select unit **712** provides phase adjustment in increments of less than one clock or symbol cycle. The fine phase select unit **712** can provide adjustment in increments of about ¼ of a symbol cycle, for example. In some implementations, the clock generation unit **709** generates multiple possible clock signals having different phases (e.g., each differing by ¼ or ⅛ symbol), and the skew control signal controls the fine phase select unit **711** to select the appropriate clock phase. In another embodiment, the clock generation unit **709** provides a single clock, and this clock can be delayed by some incremental amount to perform the fine phase select function.

Thus, skew correction is performed at the transmit side by adjusting timing of transmissions of the transmitters **703***a*-**703***b*, such as by controlling the relative phases of the transmitters. In this manner, skew correction can be

achieved with much less complexity than if skew correction were performed at the receive side.

In some embodiments, the device **701** can be a transceiver such any of the transceivers described herein. Additionally, in some embodiments, the clock generation unit **709** can form a portion of the egress line-side front end module shown in FIG. **5**. However, other configurations are possible.

In certain configurations, the clock generation unit **709** can receive a coarse adjustment signal form the coarse phase select unit **711** to coarsely adjust or shift the relative phase difference between the clock signals driving the transmitters **703***a* and **703***b*. However, other configurations are possible, such as implementations in which the coarse phase select unit **711** is used to provide a relative delay or phase difference between data signals DA+', DA−' provided as inputs to the transceivers **703***a*-**703***b*. As shown in FIG. **13**A, the fine phase select unit **712** can receive one or more clock signals provided by the clock generation unit **709**, and can perform fine phase adjustments to the clock signals. As shown in FIG. **13**A, the fine phase select unit **712** generates the first skew adjusted clock signal for controlling the first transmitter **703***a* and the second skew adjusted clock signal for controlling the second transmitter **703***b*.

The skew control system **664** accepts an input from the receiver **665** and sends an output to the system to provide coarse and/or fine skew adjustments.

The second electronic device **702** includes a differential receiver **671** configured to receive the differential signal transmitted from the first electronic device **701** and a skew transmitter **672** configured to transmit data (e.g., data indicative of skew) to the skew receiver **665** in the first electronic device **701**. In the illustrated implementation, the skew transmitter **672** is not a differential transmitter and the skew receiver **665** is not a differential receiver. For example, in certain embodiments, another wire(s) within the cable other than the high-speed differential channel is used to communicate skew information between the two devices **701**, **702**. For instance, the skew information can be transmitted using a relatively low speed link between the two devices **701**, **702**, allowing for simplified, robust transmission of the skew information. This can be useful when it is desirable to send skew information during the start-up/negotiation phase, or when the high-speed link between the two devices **701**, **702** is otherwise not yet negotiated or fully operational.

In certain configurations, the link between the transmitter **672** of the second device **702** and the receiver **665** of the first device **701** can have a maximum data rate of significantly less than the maximum data rate of the high-speed link between the transmitters **703***a*, **703***b* of the first device **701** and the receiver **671** of the second device **702**. For instance, the maximum data rate of the high speed link can be between about 5 Gbit/s and 60 Gbit/s, while the maximum data rate of the link between the transmitter **672** of the second device **702** and the receiver **665** of the first device **701** can be less than about 1 Gbit/s, for example, between about 100 Mbits/s and 200 Mbits/s. In some cases, the transmitter **672** is a differential transmitter and/or the receiver **665** is a differential receiver, and a differential line is used to transmit the skew information to the device **701**. In various implementations, the pair of differential transmitters **703***a* and **703***b* can include one or more DACs and the differential receiver **671** can include one or more ADCs.

An example algorithm for detecting and correcting for skew will now be described. The algorithm can be implemented by the skew control system **664**, for example. The device **701** transmits a pre-determined (or known) data pattern to the receiver **671** over each transmitter **703***a* and **703***b*, such as a data pattern that is known to the receiver **671**. For calibration purposes, the device **701** can additionally insert a relatively large amount of known delay between the data pattern sent via the first transmitter **703***a* and the data pattern sent via second transmitter **703***b*.

The receiver **671** of the second device **702** is configured to receive the differential signal and determine an existence of a skew between the received signals. Since, the transmitted pattern is known to the receiver **671**, the device **702** can identify receipt of the data pattern on each of the differential inputs and determine some characteristic of the skew, such as the existence, direction, or amount of skew. For instance, in one embodiment, the second device **702** determines a direction of the skew, and the transmitter **672** of the second device **702** forwards information indicating the skew's direction to the first device **701**. The second device **702** may forward an indication that the known data pattern received from the first transmitter **703***a* is currently earlier or later in time than the known data pattern received from the second transmitter **703***b*, for example.

The receiver **665** of the first device **701** receives the skew direction information and provides the received information to the skew control system **664**. The skew control system **664** provides control signals that adjust or shift the relative phase difference between the clock signals driving the pair of differential transmitters **703***a* and **703***b* to correct for skew. In this manner skew between the two channels of a differential signal are corrected at the transmitter side. For instance, if the skew direction information indicates that the data pattern transmitted via the first transmitter **703***a* is being received earlier in time than the data pattern transmitted via the second transmitter **703***b*, the skew control system **664** instructs the coarse phase select unit **711** to adjust the relative phases of the first and second transmitters **703***a*, **703***b* by a coarse amount (e.g., a certain number of symbol cycles), such that data driven by the first transmitter **703***a* is effectively delayed by the phase adjustment amount as compared to the data driven by the second transmitter **703***b*.

This process can be repeated iteratively, and during this iterative process the granularity of the phase adjustment steps can become increasingly fine as the skew becomes smaller and smaller. For instance, the skew control system **664** can instruct the coarse phase select unit **711** and/or fine phase select unit **712** to adjust the relative phases of the first and second transmitters **703***a*, **703***b* by a first amount during a first number (n) of iterations, by a second smaller amount during the next n iterations, and so on. In addition, the known delay that was initially inserted for calibration purposes can be reduced down to zero or some other small amount over the course of the phase adjustment process.

At some point in the execution of the example algorithm, as the skew adjustment continues in the initial direction to counteract the initially detected delay between the two data patterns, the amount of phase adjustment inserted by the first device **701** can overshoot, such that the difference in delay changes direction. The second device **702** detects the resulting change in direction, and transmits an indication as to the new direction via the transmitter **672**. The skew control system **664** will in turn instruct the coarse **711** and/or fine phase select units **712** to adjust the relative phase of the transmitters **703***a*, **703***b* in the opposite direction. This process can also be performed iteratively, until the difference is eliminated, or is determined to be a sufficiently small amount, as specified by the algorithm implemented by skew control system **664**.

Other implementations are possible. For instance, a delay can be used to adjust or shift the relative phase difference

between the clock signals instead of using a coarse/fine adjustment system shown in FIG. **13**A.

This method of detecting and correcting skew is not limited to two devices or a pair of differential signals, or to devices that implement differential signaling. For instance, such skew detection and correction can be scaled to a large number of devices (e.g., 1000's of devices) and a large number of signals (e.g., 1000's of differential or other signals).

FIG. **13**A illustrates de-skew of a signal being transmitted from device **701** to device **702**. It is to be understood, however, that a similar de-skew function can be performed for a signal being transmitted from device **702** to device **701**. Thus, although, in the illustrated implementation only select, different components are shown for the first and second electronic devices **701** and **702** for the purposes of illustrating the skew detection and correction for a signal going in only one direction (**701**→**702**), the first and second electronic devices **701** and **702** can be identical to each other in other implementations. For example, the first electronic device **701** can include a differential receiver configured to calculate skew and a transmitter configured to transmit the calculated skew as described with reference to the second electronic device **702**. Similarly, the second electronic device **702** can include a differential transmitter similar to the pair of differential transmitters **703***a* and **703***b*, a skew control system similar to the skew control system **664**, a system to adjust or shift the relative phase difference between the clock signals and a receiver similar to receiver **665**.

FIG. **13**B illustrates one example of a timing diagram **750** of coarse skew adjustment for the communication system **700** of FIG. **13**A. The timing diagram **750** includes a first plot **751** of the non-inverted transmit signal TXA+ and a second plot **752** of the inverted transmit signal TXA− as received by the differential receiver **671** of FIG. **13**A. As shown in FIG. **13**B, the differential transmit signal TXA+, TXA− has an initial skew ($SKEW_{INITIAL}$) when the differential transmit signal is received at the input of the differential receiver **671**.

In the illustrated configuration, the coarse phase select unit **711** generates the non-inverted transmit signal TXA+ and the inverted transmit signal TXA− as square wave signals that can have, for example, a frequency of less than 1 GHz. The illustrated square wave signals illustrated one example of a test or training sequence that can be used for skew observing skew at the differential receiver **671**. However, other configurations are possible.

The skew between the non-inverted transmit signal TXA+ and the inverted transmit signal TXA− can be observed by the differential receiver **671**, which can provide a skew indication signal to the skew control circuit **664** via the skew transmitter **672** and skew receiver **665**. The timing diagram **750** further includes a third plot **753**, which corresponds to a first coarsely adjusted inverted transmit signal TXA−. The first coarsely adjusted inverted transmit signal TXA− transmit signal can be adjusted by the skew control circuit **664** based on the skew indication signal generated by the differential receiver **671**.

After the inverted transmit signal TXA− is adjusted as shown by the third plot **753**, the differential receiver **671** can be used to determine the skew of the received differential transmit signal TXA+, TXA− after the first coarse adjustment. The differential receiver **671** can change a value of the skew indication signal based on the observed skew, and provide the updated skew indication signal to the skew control circuit **664**, which can further control the coarse skew adjustment provided by the coarse phase select unit **711**. For example, FIG. **13**B further includes a fourth plot **754**, corresponding to a second coarsely adjusted inverted transmit signal TXA−.

The process can be repeated until the skew observed by the differential receiver **671** is within a desired coarse skew tolerance, for instance, less than 1 unit interval (UI) of the square wave signals. At the end of the coarse skew adjustment, the observed skew by the differential receiver **671** corresponds to a coarsely compensated skew ($SKEW_{COARSE}$), which is less than the initial skew. Although the illustrated example shows the inverted transmit signal TXA− as being adjusted twice by the skew control circuit **664**, the skew control circuit **664** can provide coarse skew adjustment more or fewer times. Additionally, although FIG. **13**B illustrates the inverted transmit signal TXA− as being shifted in time by the coarse phase select unit **711**, other configurations are possible, such as implementations in which the non-inverted transmit signal TXA+ is shifted in time by the coarse phase select unit **711**.

FIG. **13**C illustrates one example of a timing diagram **760** of fine skew adjustment for the communication system **700** of FIG. **13**A. The timing diagram **760** includes a first plot **761** of a non-inverted transmit signal TXA+ and a second plot **762** of an inverted transmit signal TXA−, which have been adjusted by coarse skew adjustment to have a coarsely adjusted skew ($SKEW_{COARSE}$). Thus, in this example, fine skew adjustment occurs after coarse skew adjustment.

The skew between the non-inverted transmit signal TXA+ and the inverted transmit signal TXA− can be observed by the differential receiver **671**, which can provide a skew indication signal to the skew control circuit **664** via the skew transmitter **672** and skew receiver **665**. The timing diagram **750** further includes a third plot **763**, which corresponds to a first finely adjusted inverted transmit signal TXA−. The first finely adjusted inverted transmit signal TXA− transmit signal is generated based on a fine adjustment provided by the fine phase select unit **712**.

In a manner similar to that described earlier with respect to coarse skew adjustment, the skew control circuit **664** can adjust a fine skew adjustment provided by the fine phase select unit **712** one or more times. For example, the fine skew adjustments can be incremented until the skew observed by the differential receiver **671** is within a desired fine skew tolerance, for instance, less than ½ unit interval (UI) of the square wave signals. In certain configurations, fine skew adjustment is provided by selecting phases of clock signals provided to the transmitters **703***a*-**703***b* to control timing of transmissions.

At the end of the fine skew adjustment, the observed skew by the differential receiver **671** corresponds to a finely compensated skew ($SKEW_{FINE}$), which is less than the initial skew and coarsely compensated skew. Although the illustrated example shows the inverted transmit signal TXA− as being adjusted once by the skew control circuit **664**, the skew control circuit **664** can provide additional fine skew adjustments. Additionally, although FIG. **13**C illustrates the inverted transmit signal TXA− as being shifted in time by the fine phase select unit **712**, other configurations are possible, such as implementations in which the non-inverted transmit signal TXA+ is shifted in time by the fine phase select unit **712**.

FIG. **14** is a flowchart that illustrates a method **800** of detecting and correcting skew between two channels of a differential signal. The method **800** includes receiving a differential signal transmitted from a differential transmitter at a source location by a differential receiver at a destination

location, as shown in block **801**. The method **800** further includes determining an indication of skew, such as calculating a time difference between the two channels of the differential signal, as shown in block **802**. The time difference or other indication of skew can be determined at the destination location by the differential receiver. As discussed above, the calculated time difference or other observation provides a measure of the skew between the two channels of the differential signal. The method **800** further includes communicating the skew to the source location, as shown in block **803**. In various implementations, a non-differential transmitter can be used to communicate the time difference to the source location. The method **800** further includes adjusting the relative phase difference between the clock signals that drive the differential transmitter at the source location, as shown in block **804**. Control signals from a skew control system can be used to adjust the relative phase difference between the clock signals that drive the differential transmitter at the source location. The control signals from the skew control system can be generated based on the calculated time difference received from the destination location.

Examples of Start-Up Sequences/Channel Negotiations

An objective of the various implementations of the systems and methods described herein is to establish high-speed point-to-point links between different electronic devices, computing devices, storage devices and peripheral devices.

Referring back to FIGS. **2**A-**2**B, in certain configurations, the first and second transceivers **107***a*, **107***b* can operate at relatively high data rates, including rates of greater than 10 Gbit/s, greater than 20 Gbit/s, or in some embodiments, at least about 40 Gbit/s. Moreover, various aspects embodiments described, while enabling communications at these speeds, can also significantly increase the sophistication involved in establishing the link between the transceivers **107***a*, **107***b* on either end of the link or cable. For instance, to facilitate communication at higher bit-rates and over desired cable lengths, various implementations of the transceivers **107***a*, **107***b* can implement a combination of some or all of the following, without limitation: multiplexing (e.g., via PAM encoding with 4, 8, 16, 64, or more levels, or some other encoding format), channel de-skew (e.g., transmitter-based de-skew), clock and data recovery (e.g., ADC-based timing recovery), channel acquisition via filter adaptation, and the like.

Thus, the transceivers **107***a*, **107***b* can be configured to execute an automated negotiation process with the corresponding transceiver on the other end of the link in order to establish a successful link. As will be described, the negotiation process can involve a number of incremental steps beginning with rudimentary, low speed communication, and culminating in a fully functional data transmission mode.

FIG. **15** is a flowchart that illustrates a method **900** of establishing a high-speed communication link between a first electronic device and a second electronic device. The method of establishing a high-speed communication link between a first electronic device and a second electronic device can comprise three phases: (a) a start-up phase; (b) a full speed training phase; and (c) a full functional training phase. In various implementations, the three phases can be completed and the high-speed communication link between a first electronic device and a second electronic device can be established within a few milliseconds (e.g., within 5-6 milliseconds).

Start-Up Phase

The start-up phase includes establishing a start-up communication channel using a data signal with simplified modulation format (e.g. a Manchester coded data signal) between a first and a second electronic device, as shown in block **901**. The first and the second electronic device can be connected by a communication link comprising a pair of transceivers (for the first and second transceivers **107***a*-**107***b* shown in FIGS. **2**A-**2**B) and a cable (for example, the cable **110** of FIG. **2**A or the cable **115** of FIG. **2**B). The start-up communication channel can transmit and receive data at a lower data rate than the data rate at which data will be transmitted and received when fully functional. For example, the start-up communication channel can transmit and receive data at a data rate of about 100 Mbits/s as compared to transmitting and receiving data at data rates greater than 10 Gbit/s when fully function. In the start-up phase, initial information can be exchanged between the first and the second electronic devices. In various implementations, the initial information exchanged between the first and the second electronic devices can be similar to the information exchanged when setting up a communication link with other existing protocols (e.g., Ethernet). A basic channel test may be performed in the start-up phase to determine the channel parameters such as, for example, loss, noise, dispersion, non-linearity, etc. The start-up communication channel can use a simple modulation format such as Manchester coding which is a defined protocol for establishing the start-up communication channel and for testing and diagnostic purposes.

In various implementations, the start-up phase can include additional operating mode negotiation. For example, either or both of the transceivers or other devices in the link may be capable of operating in at different data rates (e.g., one or more of 100 Mbits/s, 1 Gbit/s, 10 Gbit/s, 20 Gbit/s, 25 Gbit/s, 30 Gbit/s, 35 Gbit/s, and 40 Gbit/s), and during the operating mode negotiation the two sides can determine a negotiated data rate. The protocol for determining the negotiated rate can vary, and in one embodiment the protocol specifies that the negotiated rate will correspond to the maximum data rate of the transceiver having the lowest maximum rate (e.g., 20 Gbit/s if the transceivers have maximum rates of 20 Gbit/s and 40 Gbit/s respectively).

Other parameters can be determined during the operating mode negotiation instead of or in addition to data rate. For instance, the number of active host-side or line-side channels may be negotiated. In one embodiment, for example, one or more of the transceivers in the link are similar to the transceiver **250** shown in FIG. **5**, and have single differential line side channels in each direction capable of 40 Gbit/s transmission. However, on the host-side, the transceivers are capable of operation utilizing either two 20 Gbit/s differential channels in each direction or four 10 Gbit/s differential channels in each direction, depending on the operational mode. The number of operational host-side channels can be determined in the start-up phase of the negotiation process in such cases.

The start-up phase can additionally include a de-skew function to compensate for skew arising between signals, e.g., between differential signals travelling over paired micro coaxial lines in the cable. Moreover, the de-skew function can be implemented in the line-side transmitter via a feedback mechanism, rather than in the line-side receiver, significantly reducing complexity. The de-skew function can be the one of those described herein, for example, with respect to FIGS. **12**A-**14**.

Full Speed Training Phase

In the full training phase, the communication channel is configured to transmit and receive data at the baud rate at which the communication channel will operate when fully

functional. The transmitted and received signals in this phase are modulated using a simplified format (e.g., NRZ) and not a multi-level modulation format. In this phase, the parameters of the components in the transceivers connected to the first and second electronic devices are adjusted such that NRZ modulated signals at the full baud rate can be transmitted and received at an error rate that is below or equal to a threshold error value, as shown in block **902**. The parameters that are adjusted in this phase can include phase of the recovered clock, the shape of the transmitted pulse, levels for the thresholder/automatic gain controller in the receiver, operating parameters for the equalizers, etc. In various implementations, an in-band communication channel can be added to the transmitted data stream. The in-band communication channel can be used to communicate between the first and second electronic devices. In those implementations in which an in-band communication channel is added, a framer can be used to extract the in-band channel.

Full Functional Training Phase

In the full functional training phase, the communication channel is configured to transmit and receive data at the baud rate at which the communication channel will operate when fully functional and using multi-level modulation format. In this phase, the parameters of the components in the transceivers at the first and second electronic devices are further adjusted such that signals modulated using a multi-level modulation format at the full baud rate can be transmitted and received at an error rate that is below or equal to a threshold error value, as shown in block **903**. The parameters that are adjusted in this phase can include phase of the recovered clock, the shape of the transmitted pulse, levels for the thresholder/automatic gain controller in the receiver, operating parameters for the equalizers, etc. In various implementations, the in-band communication channel can be retained to communicate between the first and second electronic devices.

Examples of Cables and Data Center Implementations

FIG. **16** is a schematic diagram of a data center system **1000** according to one embodiment. The data center system **1000** includes a first rack **1001**, a second rack **1002**, a top-of-rack switch **1003**, a first breakout cable **1011**, and a second breakout cable **1012**. Although FIG. **16** illustrates the top-of-rack switch **1003** as being connected to two racks using two breakout cables, the teachings herein are applicable to configurations including more or fewer racks and/or more or fewer breakout cables.

The top-of-rack switch **1003** includes a first quad small form-factor pluggable (QSFP) port **1031***a* and a second QSFP port **1031***b*. Additionally, the first rack **1001** includes a first server **1021***a* including a first enhanced small form-factor pluggable (SFP+) port **1041***a*, a second server **1021***b* including a second SFP+ port **1041***b*, a third server **1021***c* including a third SFP+ port **1041***c*, and a fourth server **1021***d* including a fourth SFP+ port **1041***d*. Additionally, the second rack **1002** includes a first server **1022***a* including a first SFP+ port **1042***a*, a second server **1022***b* including a second SFP+ port **1042***b*, a third server **1022***c* including a third SFP+ port **1042***c*, and a fourth server **1022***d* including a fourth SFP+ port **1042***d*.

Although FIG. **16** illustrates the racks **1001-1002** as each including four servers, the racks **1001-1002** can include more or fewer servers. Additionally, the teachings herein are applicable to configurations in which two or more racks include a different number of servers.

The breakout cables **1011-1012** have been used to electrically connect the QSFP ports of the top-of-rack switch **1003** to the SFP+ ports of the servers. For example, the first breakout cable **1011** electrically couples the first QSFP port **1031***a* to the first SFP+ port **1041***a* of the first rack's first server **1021***a*, electrically couples the first QSFP port **1031***a* to the second SFP+ port **1041***b* of the first rack's second server **1021***b*, electrically couples the first QSFP port **1031***a* to the third SFP+ port **1041***c* of the first rack's third server **1021***c*, and electrically couples the first QSFP port **1031***a* to the fourth SFP+ port **1041***d* of the first rack's fourth server **1021***d*. Similarly, the second breakout cable **1012** electrically couples the second QSFP port **1031***b* to the first SFP+ port **1042***a* of the second rack's first server **1022***a*, electrically couples the second QSFP port **1031***b* to the second SFP+ port **1042***b* of the second rack's second server **1022***b*, electrically couples the second QSFP port **1031***b* to the third SFP+ port **1042***c* of the second rack's third server **1022***c*, and electrically couples the second QSFP port **1031***b* to the fourth SFP+ port **1042***d* of the second rack's fourth server **1022***d*.

Although FIG. **16** illustrates an example in which a breakout cable has been used to electrically connect a top-of-rack switch's QFSP port to several SFP+ ports of a rack of servers, the teachings herein are applicable to configurations in which breakout cables are used in connection with other kinds of ports.

In another embodiment, a breakout cable is used to connect a QSFP28 port of a top-of-rack switch to two Q8FP ports of an end-of-row switch in a server rack. In another embodiment, a breakout cable is used to connect a QSFP28 port of a top-of-rack switch to eight SFP+ ports associated with servers of a server rack. Although two additional examples have been provided, the teachings herein are applicable to a wide range of ports and configurations.

FIG. **17**A is a schematic diagram of a breakout cable **1100** according to one embodiment. The breakout cable **1100** illustrates one embodiment of the breakout cables **1011**, **1012** of FIG. **16**.

The breakout cable **1100** includes a QSFP interface **1101** including a first transceiver **1111**. The breakout cable **1100** further includes a first SFP+ interface **1103***a*, a second SFP+ interface **1103***b*, a third SFP+ interface **1103***c*, and a fourth SFP+ interface **1103***d*. The breakout cable **1100** further includes cabling **1102**, which includes a primary cable or main trunk **1104**, a breakout hub **1105**, a first secondary cable **1106***a*, a second secondary cable **1106***b*, a third secondary cable **1106***c*, and a fourth secondary cable **1106***d*. As shown in FIG. **17**A, the breakout hub **1105** includes a second transceiver **1112**. Although FIG. **17**A illustrates a configuration with four secondary cables, more or fewer secondary cables can be included depending on the application the breakout cable is used for.

The QSFP interface **1101** includes a host-side QSFP transmit interface **1121** which can be used to receive signals from a top-of-rack switch or other host for transmission over the cabling **1102** to the second transceiver **1112**. The QSFP interface **1101** further includes a host-side QSFP receive interface **1122** which can be used to send signals to the top-of-rack switch or other host that are received over the cabling **1102** from the second transceiver **1112**.

In the illustrated configuration, the first transceiver **1111** multiplexes transmit signals received from the host-side QSFP transmit interface **1121** for transmission over the primary cable **1104** to the second transceiver **1112**. Additionally, the first transceiver **1111** receives a multiplexed signal from the second transceiver **1112** over the primary cable **1104**, and de-multiplexes the received signal to generate receive signals on the host-side QSFP receive interface

1122. Thus, the primary cable 1104 is used to for transmission of multiplexed signals between the first and second transceivers 1111, 1112.

In one embodiment, the first transceiver 1111 has an implementation similar to the transceiver 40 of FIG. 1C, and the first transceiver 1111 provides a 4:2 multiplexing or parallel-to-serial SerDes operation to data transmitted over the primary cable 1104 and provides a 2:4 de-multiplexing or serial-to-parallel SerDes operation to data received over the primary cable 1104. In another embodiment, the first transceiver 1111 has an implementation similar to the transceiver 40 of FIG. 1C with the DAC 14*b*, the FIR 17B, the equalizer 21*b*, the CDR circuit 22*b*, and the FFE/DFE 25*b* omitted, and the first transceiver 1111 provides a 4:1 multiplexing operation to data transmitted over the primary cable 1104 and provides a 1:4 de-multiplexing operation to data received over the primary cable 1104. Although two example transceiver implementations have been described, other configurations are possible.

In the illustrated configuration, the second transceiver 1112 is electrically connected to the SFP+ interfaces 1103*a*-1103*d* via the secondary cables 1106*a*-1106*d*. As shown in FIG. 17A, the first SFP+ interface 1103*a* includes a first host-side SFP+ receive interface 1123*a* and a first host-side SFP+ transmit interface 1124*a*, which can be used to send or receive signals from a rack server or other host. Additionally, the second SFP+ interface 1103*b* includes a second host-side SFP+ receive interface 1123*b* and a second host-side SFP+ transmit interface 1124*b*, the third SFP+ interface 1103*c* includes a third host-side SFP+ receive interface 1123*c* and a third host-side SFP+ transmit interface 1124*c*, and the fourth SFP+ interface 1103*d* includes a fourth host-side SFP+ receive interface 1123*d* and a fourth host-side SFP+ transmit interface 1124*d*.

The second transceiver 1112 can be used to transmit or receive host-side data to hosts electrically connected to the SFP+ interfaces 1103*a*-1103*d*. In one embodiment, the second transceiver 1112 has an implementation similar to the transceiver 40 of FIG. 1C and provides 4:2 multiplexing operations and 2:4 de-multiplexing operations for transmissions over the primary cable 1104. In another embodiment, the second transceiver 1112 has an implementation similar to the transceiver 40 of FIG. 1C with the DAC 14*b*, the FIR 17B, the equalizer 21*b*, the CDR circuit 22*b*, and the FFE/DFE 25*b* omitted, and the second transceiver 1111 provides 4:1 multiplexing operations and 1:4 de-multiplexing operations for transmissions over the primary cable 1104. In such a configuration, the first transmit signal TXA+, TXA− can be received over the first host-side SFP+ transmit interface 1124*a*, the second transmit signal TXB+, TXB− can be received over the second host-side SFP+ transmit interface 1124*b*, the third transmit signal TXC+, TXC− can be received over the third host-side SFP+ transmit interface 1124*c*, the fourth transmit signal TXD+, TXD− can be received over the fourth host-side SFP+ transmit interface 1124*d*, the first receive signal RXA+, RXA− can be sent over the first host-side SFP+ receive interface 1123*a*, the second receive signal RXB+, RXB− can be sent over the second host-side SFP+ receive interface 1123*b*, the third receive signal RXC+, RXC− can be sent over the third host-side SFP+ receive interface 1123*c*, and the fourth receive signal RXD+, RXD− can be sent over the fourth host-side SFP+ receive interface 1123*d*.

FIG. 17B is a schematic diagram of a breakout cable 1200 according to another embodiment. The breakout cable 1200 illustrates one embodiment of the breakout cable 1100 of FIG. 17A.

The breakout cable 1200 includes a QSFP interface or pluggable module 1201, cabling 1202, a first SFP+ interface or pluggable module 1103*a*, a second SFP+ interface 1103*b*, a third SFP+ interface 1103*c*, and a fourth SFP+ interface 1103*d*.

In the illustrated configuration, the QSFP interface 1201 includes a host-side QSFP transmit interface 1121 for receiving transmit signals from a host, a host-side QSFP receive interface 1122 for sending receive signals to the host, a line-side transmit interface 1253 for sending transmit signals over the cabling 1202, and a line-side receive interface 1254 for receiving receive signals over the cabling 1202. In certain configurations, the host-side QSFP transmit interface 1121, the host-side QSFP receive interface 1122, the line-side transmit interface 1253, and the line-side receive interface 1254 operate differentially. Thus, each of the illustrated lines can represent a differential signal in certain configurations.

Additionally, the QSFP interface 1201 includes a first transceiver 1221, an egress block 1231, and an ingress block 1241. The egress block 1231 can receive transmit signals from the host over the host-side QSFP transmit interface 1121, and can process the transmit signals to provide processed signals as inputs to the first transceiver 1221. The egress block 1231 can provide a wide variety of functions, such as equalization and/or impedance matching. The ingress block 1241 can be used to process host-side receive signals from the first transceiver 1221 to generate receive signals on the host-side QSFP receive interface 1122. The ingress block 1241 can provide a wide variety of functions, such as impedance matching and/or driving.

In the illustrated configuration, the first transceiver 1221 includes a transmit-path DSP 1233, which is used to provide conditioning and multiplexing to signals received on the host-side to generate multiplexed signals for transmission over the cabling 1202. Additionally, the first transceiver 1221 further includes a receive-path DSP 1242, which is used to providing conditioning and demultiplexing to signals received over the cabling 1202.

As shown in FIG. 17B, the cabling 1202 includes a second transceiver 1260 in a breakout hub 1205 of the cabling 1202. Although not illustrated in FIG. 17B for clarity of the figures, the cabling 1202 can include a primary cable (for example, the primary cable 1104 of FIG. 17A) associated with communications over a first communications boundary 1255, and a plurality of secondary cables (for example, the secondary cables 1106*a*-1106*d* of FIG. 17A) associated with communications over a second communications boundary 1256. In the illustrated configuration, the second transceiver 1260 includes a receive-path DSP 1261 for conditioning and demultiplexing signals received from the first transceiver 1221, and for sending the demultiplexed signals to the SFP+ interfaces 1103*a*-1103*d* over the host-side receive interface 1263. Additionally, the second transceiver 1260 further includes a transmit path DSP 1262 for multiplexing signals received from the SFP+ interfaces 1103*a*-1103*d* over the host-side transmit interface 1264, and sending the multiplexed signals to the first transceiver 1221. In certain configurations, the second transceiver 1260 communicates differentially on the line-side and host-side. Thus, each of the illustrated lines can represent a differential signal in certain configurations.

Additional details of the breakout cable 1200 can be similar to those described earlier.

FIG. 18 is a schematic diagram of a data center system 1300 according to another embodiment. The data center system 1300 includes a rack 1301, an end-of-row switch

1302, a top-of-rack switch **1303**, a first breakout cable **1311**, and a second breakout cable **1312**. Although FIG. **18** illustrates the top-of-rack switch **1303** as being connected to one rack and one end-of-row switch, the teachings herein are applicable to a wide variety of configurations, including configurations with additional racks and/or end-of-row switches.

The top-of-rack switch **1303** includes a first QSFP28 port **1396***a* and a second QSFP28 port **1396***b*. Additionally, the rack **1301** includes first to tenth servers **1321***a*-**1321***j*, which include first to tenth SFP+ ports **1341***a*-**1341***j*, respectively. Furthermore, the end-of-row switch **1302** includes a first QSFP port **1304***a* and a second QSFP port **1304***b*.

In the illustrated configuration, the first breakout cable **1311** has been used to electrically connect the first QSFP28 port **1306***a* of the top-of-rack switch **1303** to the first and second QSFP ports **1304***a*-**1304***b* of the end-of-row switch **1302**. Additionally, the second breakout cable **1312** has been used to electrically connect the second QSFP28 port **1306***b* of the top-of-rack switch **1303** to the SFP+ ports **1341***a*-**1341***j* of the servers **1321***a*-**1321***j*.

The first and second breakout cables **1311**, **1312** can include integrated transceivers in accordance with the teachings herein. Thus, the breakout cables **1311**, **1312** can have thinner cable width and/or provided enhanced communications relative to conventional cabling. Although a specific example of ports and connections has been shown, the teachings herein are applicable to a wide range of ports and configurations.

The techniques described herein can be used to reduce cabling overhead in data center applications.

For example, with reference back to FIGS. **16**-**17**A, a thickness of the primary cable **1104** can be reduced relative to a configuration in which cabling is used to transmit data from a top-of-rack switch to rack servers without multiplexing. For example, in a 40 Gigabit Ethernet (GE) server, existing copper cabling can use 8 pairs of wires in the main trunk or primary cable of the copper cabling (four pairs for transmit, four pairs for receive). Thick cabling can be undesirable, since large cables can be difficult to cool and/or difficult to route or manage. In contrast, the illustrated breakout cable **1100** can use two pairs (one pair for transmit, one for receive) of differential micro coaxial wires in the primary cable **1104** when 4:1 multiplexing and 1:4 demultiplexing operations are employed for transmissions between the first and second transceivers **1111**, **1112**. Thus, the number of wires used to transmit data can be significantly reduced as compared to existing solutions. And, where each of the individual wires is grouped together into a single cable, such as in the breakout cable example, the overall cable thickness is greatly reduced. In addition, the transceivers described herein allow for reduced thickness in the individual wires included within a cable. For instance, as discussed, certain embodiments are compatible with micro coaxial cables, which have significantly reduced diameter as compared to twisted-pair copper wires. Moreover, micro coaxial cables have improved bend radius and reduced cost as compared to twisted-pair copper wires.

In one embodiment, a primary cable or main trunk of a breakout cable has a diameter less than about 4 mm and a length of up to about 5 m. In another embodiment, a primary cable of a breakout cable has a diameter less than about 6 mm and a length between about 5 m and about 10 m. In another embodiment, a primary cable of a breakout cable has a diameter less than about 9.5 mm and a length between about 10 m and about 15 m. Although various examples of breakout cable diameters and lengths have been provided, other configurations are possible.

The table provided below illustrates some additional example embodiments achievable using different active QFSP or SFP modules including the transceivers described herein. Each of the exemplary modules operate with a cable including two or more differential pairs of micro coaxial wires. The diameter (diam.) of each individual micro coaxial wire is specified using American wire gauge (AWG), cable diameters are specified in millimeters (mm), cable length is specified in meters (m), and power is specified in Watts (W). Cable diameters include the diameter of the outer casing of the cable, where the outer casing can contain the individual micro coaxial wires. The cables can in some cases also include additional componentry including one or more separate control wires, power lines, ground lines, shielding material, and the like. For instance, in some embodiments, the examples provided below are similar to the cables **131**, **132** provided in FIGS. **3**A and **3**B, as applicable.

I/F Type	Data Rate	Host Side	Line Side	# of Micro Coax Pairs in Cable	Diam. of Each Micro Coax Wire (AWG)	Cable Diam. (mm)	Cable Length (m)	Power (W)
QSFP	40 Gbit/s	4 × 10 Gbit/s (NRZ)	1 × 40 Gbit/s (PAM4)	2	between about AWG 38 and about AWG 30	≤ about 5 mm	up to about 5 m	≤1 W
QSFP	40 Gbit/s	4 × 10 Gbit/s (NRZ)	1 × 40 Gbit/s (PAM4)	2	AWG 34	3.2 mm	3 m	≤1 W
QSFP	40 Gbit/s	4 × 10 Gbit/s (NRZ)	1 × 40 Gbit/s (PAM4)	2	between about AWG 34 and about AWG 26	≤ about 5.5 mm	up to about 7 m	≤1 W
QSFP	40 Gbit/s	4 × 10 Gbit/s (NRZ)	1 × 40 Gbit/s (PAM4)	2	AWG 30	3.7 mm	5 m	≤1 W
QSFP	40 Gbit/s	4 × 10 Gbit/s (NRZ)	1 × 40 Gbit/s (PAM4)	2	between about AWG 32 and about AWG 22	≤ about 8 mm	up to about 10 m	≤1 W
QSFP	40 Gbit/s	4 × 10 Gbit/s (NRZ)	1 × 40 Gbit/s (PAM4)	2	AWG 26	5.2 mm	7 m	≤1 W
QSFP	40 Gbit/s	4 × 10 Gbit/s (NRZ)	1 × 40 Gbit/s (PAM4)	2	between about AWG 26 and about AWG 18	≤ about 9 mm	up to about 15 m	≤1 W
QSFP	40 Gbit/s	4 × 10 Gbit/s (NRZ)	1 × 40 Gbit/s (PAM4)	2	AWG 22	about 6.3 mm	10 m	≤1 W

-continued

I/F Type	Data Rate	Host Side	Line Side	# of Micro Coax Pairs in Cable	Diam. of Each Micro Coax Wire (AWG)	Cable Diam. (mm)	Cable Length (m)	Power (W)
QSFP	40 Gbit/s	4 × 10 Gbit/s (NRZ)	1 × 40 Gbit/s (PAM4)	2	between about AWG 24 and about AWG 16	≤ about 11 mm	up to about 20 m	≤1 W
QSFP	40 Gbit/s	4 × 10 Gbit/s (NRZ)	1 × 40 Gbit/s (PAM4)	2	AWG 22	9.5 mm	15 m	≤1 W
SFP+	40 Gbit/s	2 × 20 Gbit/s (NRZ)	1 × 40 Gbit/s (PAM4)	2	between about AWG 38 and about AWG 28	≤ about 5 mm	up to about 5 m	≤1 W
SFP+	40 Gbit/s	2 × 20 Gbit/s (NRZ)	1 × 40 Gbit/s (PAM4)	2	AWG 34	3.2 mm	3 m	≤1 W
SFP+	40 Gbit/s	2 × 20 Gbit/s (NRZ)	1 × 40 Gbit/s (PAM4)	2	between about AWG 30 and about AWG 20	≤ about 7 mm	up to about 10 m	≤1 W
SFP+	40 Gbit/s	2 × 20 Gbit/s (NRZ)	1 × 40 Gbit/s (PAM4)	2	AWG 26	5.2 mm	7 m	≤1 W
QSFP28	112 Gbit/s	4 × 28 Gbit/s (NRZ)	2 × 56 Gbit/s (PAM4)	4	between about AWG 38 and about AWG 28	≤ about 5.5 mm	up to about 4 m	≤2 W
QSFP28	112 Gbit/s	4 × 28 Gbit/s (NRZ)	2 × 56 Gbit/s (PAM4)	4	AWG 34	4 mm	3 m	≤2 W
QSFP28	112 Gbit/s	4 × 28 Gbit/s (NRZ)	2 × 56 Gbit/s (PAM4)	4	between about AWG 38 and about AWG 28	≤ about 6.5 mm	up to about 5 m	≤2 W
QSFP28	112 Gbit/s	4 × 28 Gbit/s (NRZ)	2 × 56 Gbit/s (PAM4)	4	AWG 32	4.7 mm	4 m	≤2 W
QSFP28	112 Gbit/s	4 × 28 Gbit/s (NRZ)	2 × 56 Gbit/s (PAM4)	4	between about AWG 36 and about AWG 26	≤ about 7 mm	up to about 7 m	≤2 W
QSFP28	112 Gbit/s	4 × 28 Gbit/s (NRZ)	2 × 56 Gbit/s (PAM4)	4	AWG 30	4.8 mm	5 m	≤2 W
QSFP28	112 Gbit/s	4 × 28 Gbit/s (NRZ)	2 × 56 Gbit/s (PAM14)	4	between about AWG 32 and about AWG 22	≤ about 10 mm	up to about 9 m	≤2 W
QSFP28	112 Gbit/s	4 × 28 Gbit/s (NRZ)	2 × 56 Gbit/s (PAM14)	4	AWG 24	8.9 mm	up to about 10 m	≤2 W

While the above embodiments can be implemented as the primary cable **1104** of a breakout cable similar to those of FIG. **16-17**, other implementations are contemplated. For instance, according to some embodiments an active cable provides matching interfaces at both ends of the cable (e.g., QSFP28 to QSFP28, QSFP to QSFP, SFP+ to SFP+), rather than breaking out into multiple lower speed outputs at one end.

Certain Advantages; Terminology; Additional Embodiments

Various implementations of described in this disclosure can realize one or more of the following potential advantages. The systems and methods described herein can be used to establish high-speed point-to-point communication between two electronic devices over a lossy, noisy and/or dispersive channel. The systems and methods described herein can advantageously deliver digital and/or analog data at various bit-rates reliably in the presence of intersymbol interference (ISI) and other signal impairments caused due to a lossy, noisy, non-linear and/or dispersive channel. Various implementations of the digital clock and data recovery systems described herein include a first feedback path to recover a clock signal and a second feedback path to recover a data signal. Providing separate clock and data recovery paths can allow for simultaneous data recovery with high resolution and fast clock recovery with low latency. Additionally, the clock and data recovery systems described herein can be used to recover clock and data signals from data encoded in different modulation formats (e.g., NRZ or multi-level modulation format, such as, for example PAM-4, PAM-8, PAM-16, PAM-64, etc.). Furthermore, the systems and methods described herein are configured to reduce power consumption by virtue of being implemented with digital processing systems and digital logic controllers. Accordingly, the systems and methods described herein can provide fast (e.g., at data rates greater than 10 Gbit/s), reliable, high-speed communication between different electronic, computing, storage and peripheral devices by consuming lower power.

As used herein, a phrase referring to "at least one of" a list of items refers to any combination of those items, including single members. As an example, "at least one of: a, b, or c" is intended to cover: a, b, c, a-b, a-c, b-c, and a-b-c.

The various illustrative logics, logical blocks, modules, circuits and algorithm steps described in connection with the implementations disclosed herein may be implemented as electronic hardware, computer software, or combinations of both. The interchangeability of hardware and software has been described generally, in terms of functionality, and illustrated in the various illustrative components, blocks, modules, circuits and steps described above. Whether such functionality is implemented in hardware or software depends upon the particular application and design constraints imposed on the overall system.

The hardware and data processing apparatus used to implement the various illustrative logics, logical blocks,

modules and circuits described in connection with the aspects disclosed herein may be implemented or performed with a general purpose single- or multi-chip processor, a digital signal processor (DSP), an application specific integrated circuit (ASIC), a field programmable gate array (FPGA) or other programmable logic device, discrete gate or transistor logic, discrete hardware components, or any combination thereof designed to perform the functions described herein. A general purpose processor may be a microprocessor, or, any conventional processor, controller, microcontroller, or state machine. A processor also may be implemented as a combination of electronic devices, such as a combination of a DSP and a microprocessor, a plurality of microprocessors, one or more microprocessors in conjunction with a DSP core, or any other such configuration. In some implementations, particular steps and methods may be performed by circuitry that is specific to a given function.

In one or more aspects, the functions described may be implemented in hardware, digital electronic circuitry, computer software, firmware, including the structures disclosed in this specification and their structural equivalents thereof, or in any combination thereof. Implementations of the subject matter described in this specification also can be implemented as one or more computer programs, e.g., one or more modules of computer program instructions, encoded on a computer storage media for execution by, or to control the operation of, data processing apparatus.

If implemented in software, the functions may be stored on or transmitted over as one or more instructions or code on a computer-readable medium. The steps of a method or algorithm disclosed herein may be implemented in a processor-executable software module which may reside on a computer-readable medium. Computer-readable media includes both computer storage media and communication media including any medium that can be enabled to transfer a computer program from one place to another. Storage media may be any available media that may be accessed by a computer. By way of example, and not limitation, such computer-readable media may include RAM, ROM, EEPROM, CD-ROM or other optical disk storage, magnetic disk storage or other magnetic storage devices, or any other medium that may be used to store desired program code in the form of instructions or data structures and that may be accessed by a computer. Also, any connection can be properly termed a computer-readable medium. Disk and disc, as used herein, includes compact disc (CD), laser disc, optical disc, digital versatile disc (DVD), floppy disk, and Blu-ray disc where disks usually reproduce data magnetically, while discs reproduce data optically with lasers. Combinations of the above also may be included within the scope of computer-readable media. Additionally, the operations of a method or algorithm may reside as one or any combination or set of codes and instructions on a machine readable medium and computer-readable medium, which may be incorporated into a computer program product.

Various modifications to the implementations described in this disclosure may be readily apparent to those skilled in the art, and the generic principles defined herein may be applied to other implementations without departing from the spirit or scope of this disclosure. Thus, the claims are not intended to be limited to the implementations shown herein, but are to be accorded the widest scope consistent with this disclosure, the principles and the novel features disclosed herein.

Certain features that are described in this specification in the context of separate implementations also can be implemented in combination in a single implementation. Conversely, various features that are described in the context of a single implementation also can be implemented in multiple implementations separately or in any suitable subcombination. Moreover, although features may be described above as acting in certain combinations and even initially claimed as such, one or more features from a claimed combination can in some cases be excised from the combination, and the claimed combination may be directed to a subcombination or variation of a subcombination.

Similarly, while operations are depicted in the drawings in a particular order, a person having ordinary skill in the art will readily recognize that such operations need not be performed in the particular order shown or in sequential order, or that all illustrated operations be performed, to achieve desirable results. Further, the drawings may schematically depict one more example processes in the form of a flow diagram. However, other operations that are not depicted can be incorporated in the example processes that are schematically illustrated. For example, one or more additional operations can be performed before, after, simultaneously, or between any of the illustrated operations. In certain circumstances, multitasking and parallel processing may be advantageous. Moreover, the separation of various system components in the implementations described above should not be understood as requiring such separation in all implementations, and it should be understood that the described program components and systems can generally be integrated together in a single software product or packaged into multiple software products. Additionally, other implementations are within the scope of the following claims. In some cases, the actions recited in the claims can be performed in a different order and still achieve desirable results.

Unless the context clearly requires otherwise, throughout the description and the claims, the words "comprise," "comprising," and the like are to be construed in an inclusive sense, as opposed to an exclusive or exhaustive sense; that is to say, in the sense of "including, but not limited to." The word "coupled", as generally used herein, refers to two or more elements that may be either directly connected, or connected by way of one or more intermediate elements. Likewise, the word "connected", as generally used herein, refers to two or more elements that may be either directly connected, or connected by way of one or more intermediate elements. Additionally, the words "herein," "above," "below," and words of similar import, when used in this application, shall refer to this application as a whole and not to any particular portions of this application. Where the context permits, words in the above Detailed Description using the singular or plural number may also include the plural or singular number respectively. The word "or" in reference to a list of two or more items, that word covers all of the following interpretations of the word: any of the items in the list, all of the items in the list, and any combination of the items in the list.

Moreover, conditional language used herein, such as, among others, "can," "could," "might," "can," "e.g.," "for example," "such as" and the like, unless specifically stated otherwise, or otherwise understood within the context as used, is generally intended to convey that certain embodiments include, while other embodiments do not include, certain features, elements and/or states. Thus, such conditional language is not generally intended to imply that features, elements and/or states are in any way required for one or more embodiments or that one or more embodiments necessarily include logic for deciding, with or without

author input or prompting, whether these features, elements and/or states are included or are to be performed in any particular embodiment.

The above detailed description of embodiments of the invention is not intended to be exhaustive or to limit the invention to the precise form disclosed above. While specific embodiments of, and examples for, the invention are described above for illustrative purposes, various equivalent modifications are possible within the scope of the invention, as those skilled in the relevant art will recognize. For example, while processes or blocks are presented in a given order, alternative embodiments may perform routines having steps, or employ systems having blocks, in a different order, and some processes or blocks may be deleted, moved, added, subdivided, combined, and/or modified. Each of these processes or blocks may be implemented in a variety of different ways. Also, while processes or blocks are at times shown as being performed in series, these processes or blocks may instead be performed in parallel, or may be performed at different times.

The teachings of the invention provided herein can be applied to other systems, not only the system described above. The elements and acts of the various embodiments described above can be combined to provide further embodiments.

While certain embodiments of the inventions have been described, these embodiments have been presented by way of example only, and are not intended to limit the scope of the disclosure. Indeed, the novel methods and systems described herein may be embodied in a variety of other forms; furthermore, various omissions, substitutions and changes in the form of the methods and systems described herein may be made without departing from the spirit of the disclosure. The accompanying claims and their equivalents are intended to cover such forms or modifications as would fall within the scope and spirit of the disclosure.

What is claimed is:

1. A transceiver integrated circuit (IC) for a communication system, wherein the transceiver IC comprises:

a differential transmitter configured to generate a differential signal for transmission via an external cable, wherein the differential transmitter comprises:

a first transmitter configured to generate a non-inverted component of the differential signal, wherein the first transmitter is configured to receive a first data signal and a first clock signal that controls timing of transmissions of the first transmitter; and

a second transmitter configured to generate an inverted component of the differential signal, wherein the second transmitter is configured to receive a second data signal and a second clock signal that controls timing of transmissions of the second transmitter; and

a skew adjustment circuit configured to provide a first amount of skew adjustment to the differential transmitter by adjusting a relative delay between the first data signal and the second data signal, and to provide a second amount of skew adjustment to the differential transmitter by adjusting a relative delay between the first clock signal and the second clock signal.

2. The transceiver IC of claim **1**, wherein the first transmitter comprises a first digital-to-analog converter (DAC) configured to generate the non-inverted component of the differential signal based on converting the first data signal, and the second transmitter comprises a second DAC configured to generate the inverted component of the differential signal based on converting the second data signal.

3. The transceiver IC of claim **1**, wherein the first amount of skew adjustment comprises a coarse adjustment and the second amount of skew adjustment comprises a fine adjustment having a finer resolution than the coarse adjustment, wherein the skew adjustment circuit is configured to provide the second amount of skew adjustment after the first amount of skew adjustment.

4. The transceiver IC of claim **1**, wherein the transceiver IC further comprises a skew control circuit configured to receive a skew indication signal indicating a skew of the differential signal, and to control at least one of the first amount of skew adjustment and the second amount of skew adjustment provided by the skew adjustment circuit based on the skew indication signal.

5. The transceiver IC of claim **4**, wherein the skew control circuit is further configured to incrementally control the at least one of the first amount of skew adjustment and the second amount of skew adjustment until the skew indication signal indicates that a direction of the skew has reversed.

6. The transceiver IC of claim **1**, wherein the skew adjustment circuit comprises a clock generation unit configured to generate at least one clock signal having a clock cycle, and a first phase selection circuit configured to provide the first amount of skew adjustment by providing phase adjustment in full increments of the clock cycle.

7. The transceiver IC of claim **6**, wherein the skew adjustment circuit further comprises a second phase selection circuit configured to provide the second amount of skew adjustment by providing phase adjustment in increments of less than the clock cycle.

8. A communication system comprising:

a cable; and

a first integrated circuit (IC) comprising:

a differential transmitter configured to transmit a differential signal over the cable, wherein the differential transmitter comprises a first transmitter configured to generate a non-inverted component of the differential signal and a second transmitter configured to generate an inverted component of the differential signal, wherein the first transmitter is configured to receive a first data signal and a first clock signal that controls timing of transmissions of the first transmitter, and wherein the second transmitter is configured to receive a second data signal and a second clock signal that controls timing of transmissions of the second transmitter; and

a skew adjustment circuit configured to provide a first amount of skew adjustment to the differential transmitter by adjusting a relative delay between the first data signal and the second data signal, and to provide a second amount of skew adjustment to the differential transmitter by adjusting a relative delay between the first clock signal and the second clock signal.

9. The communication system of claim **8**, further comprising a second IC comprising a differential receiver configured to receive the differential signal from the cable.

10. The communication system of claim **9**, wherein the second IC further comprises a skew detector configured to generate a skew indication signal indicating a skew between the non-inverted component and the inverted component of the differential signal, and a skew transmitter configured to transmit the skew indication signal to the first IC.

11. The communication system of claim **10**, wherein the cable comprises a pair of micro coaxial lines configured to

carry the differential signal and a control line configured to carry the skew indication signal.

12. The communication system of claim **8**, wherein the first transmitter comprises a first digital-to-analog converter (DAC) configured to generate the non-inverted component of the differential signal based on converting the first data signal, and the second transmitter comprises a second DAC configured to generate the inverted component of the differential signal based on converting the second data signal.

13. The communication system of claim **8**, wherein the first amount of skew adjustment comprises a coarse adjustment and the second amount of skew adjustment comprises a fine adjustment having a finer resolution than the coarse adjustment, wherein the skew adjustment circuit is configured to provide the second amount of skew adjustment after the first amount of skew adjustment.

14. The communication system of claim **8**, wherein the first IC further comprises a skew control circuit configured to receive a skew indication signal indicating a skew of the differential signal, and to control at least one of the first amount of skew adjustment and the second amount of skew adjustment provided by the skew adjustment circuit based on the skew indication signal.

15. The communication system of claim **14**, wherein the skew control circuit is further configured to incrementally control at at least one of the first amount of skew adjustment and the second amount of skew adjustment until the skew indication signal indicates that a direction of the skew has reversed.

16. The communication system of claim **8**, wherein the skew adjustment circuit comprises a clock generation unit configured to generate at least one clock signal having a clock cycle, and a first phase selection circuit configured to provide the first amount of skew adjustment by providing phase adjustment in full increments of the clock cycle.

17. The communication system of claim **16**, wherein the skew adjustment circuit further comprises a second phase selection circuit configured to provide the second amount of skew adjustment by providing phase adjustment in increments of less than the clock cycle.

18. A method of skew correction in a communication system, the method comprising:

transmitting a non-inverted component of a differential signal over a cable using a first transmitter of a differential transmitter;

transmitting an inverted component of the differential signal over the cable using a second transmitter of the differential transmitter;

providing a first amount of skew adjustment to the differential transmitter by adjusting a relative delay between a first data signal inputted to the first transmitter and a second data signal inputted to the second transmitter; and

providing a second amount of skew adjustment to the differential transmitter by adjusting a relative delay between a first clock signal for timing transmissions of the first transmitter and a second clock signal for timing transmissions of the second transmitter,

wherein the first clock signal is inputted to the first transmitter and the second clock signal is inputted to the second transmitter.

19. The method of claim **18**, further comprising receiving the differential signal at a differential receiver via the cable, observing a skew of the differential signal using a skew detector of the differential receiver, and controlling the first amount of skew adjustment and the second amount of skew adjustment based on the observed skew.

20. The method of claim **18**, further comprising providing the second amount of skew adjustment after the first amount of skew adjustment, wherein the first amount of skew adjustment comprises a coarse adjustment and the second amount of skew adjustment comprises a fine adjustment having a finer resolution than the coarse adjustment.

* * * * *