UNITED STATES INTERNATIONAL TRADE COMMISSION

Washington, D.C.

In the Matter of **CERTAIN ACTIVE ELECTRICAL CABLES AND COMPONENTS THEREOF**	**Inv. No. 337-TA-1446**

ORDER NO. 12: GRANTING NON-PARTY MARVELL SEMICONDUCTOR, INC.'S MOTION TO DISQUALIFY FISH & RICHARDSON P.C.

(August 11, 2025)

I. INTRODUCTION

On July 10, 2025, non-party Marvell Semiconductor Inc. ("Marvell") moved (1446-004) to disqualify Fish & Richardson P.C. ("Fish" or "F&R") as counsel for complainants Credo Semiconductor, Inc. and Credo Technology Group Ltd. ("Credo") under ABA Model Rules of Professional Conduct 1.7 and 1.9 ("Mot."). On July 21, 2025, and pursuant to Order No. 10, F&R and Credo filed a joint opposition to the motion ("Opp'n"). The same day, respondents Molex, LLC ("Molex"), TE Connectivity Corporation ("TE Connectivity), and Amphenol Corporation ("Amphenol") (collectively, "Respondents") filed a response taking no position on disqualification but arguing any accused product including Marvell components is outside the scope of the investigation and cannot be subject to any exclusionary relief ("R Resp."). On July 25, 2025, and pursuant to Order No. 9, the Commission Investigative Staff ("Staff") filed a statement in support of the motion to disqualify ("Staff Resp."). Further, on July 25, 2025, a teleconference was held

between Credo, Marvell, and Respondents to discuss the motion in addition to related discovery matters. EDIS Doc. ID 857998.

On August 1, 2025, Credo moved (1446-008) for leave to file a reply to Staff's response ("C Reply"). On August 7, 2025, Staff filed its own reply ("Staff Reply"). On August 11, 2025, Marvell filed a reply ("Marvell Reply"). Leave is granted given the outcome below.

For the reasons explained, Marvell's motion to disqualify is granted.

II. LEGAL STANDARDS

Pursuant to the Administrative Procedure Act, Administrative Law Judges have inherent authority to control their proceedings, including the disqualification of counsel. 5 U.S.C. § 556(c)(5); *see* 19 C.F.R. § 201.15(a); *Certain Consumer Electronics and Display Devices with Graphics Processing and Graphics Processing Units Therein*, Inv. No. 337-TA-932, Order No. 5 (Dec. 1, 2014). This authority, however, "has rarely been exercised, as disqualification of counsel is drastic and disfavored." *Certain Dynamic Random Access Memory and NAND Flash Memory Devices and Products Containing Same* ("*DRAMs*"), Inv. No. 337-TA-803, Order No. 40 at 4 (Apr. 18, 2012). This is because "[t]he right of a party to choose and maintain its own counsel is a matter of significant importance." *Certain Baseband Processor Chips and Chipsets, Transmitter and Receiver (Radio) Chips, Power Control Chips, and Products Containing Same, Including Cellular Telephone Handsets* ("*Baseband Processor Chips*"), Inv. No. 337-TA-543, Order No. 29 at 24 (Mar. 9, 2006). Thus, disqualification is used "only when absolutely necessary," with "the movant bear[ing] the burden of showing that disqualification is warranted by a high standard of proof." *Certain Semiconductor Chips with Minimized Chip Package Size and Products Containing Same* ("*Semiconductor Chips*"), Inv. No. 337-TA-605, Order No. 15 at 3 (Dec. 27, 2007). Even where there is a violation of ethical rules, this does not result in *per se* disqualification

of the attorney involved. *Id*. at 4; *see DRAMs*, Inv. No. 337-TA-803, Order No. 40 at 5. An attorney should only be disqualified when "continued representation will cause prejudice to or adversely impact the rights of another party in the matter" and where "such prejudice outweighs the prejudice caused by disqualification." *Baseband Processor Chips*, Inv. No. 337-TA-543, Order No. 29 at 21-22.

Administrative Law Judges have looked to the ABA Model Rules of Professional Conduct for guidance when faced with motions to disqualify counsel. *See, e.g., DRAMs*, Inv. No. 337-TA-803, Order No. 40 at 4; *Certain Network Interface Cards and Access Points for Use in Direct Sequence Spread Spectrum Wireless Local Area Networks and Products Containing Same* ("*Network Interface*"), Inv. No. 337-TA-455, Order No. 26 at 4 n.1 (Aug. 2, 2001) (the Model Rules "reflect a national consensus, which the Commission should follow" (quoting *Certain Salinomycin Biomass and Preparations Containing Same*, Inv. No. 337-TA-370, Order No. 13 at 3-5 (May 25, 1995))).

ABA Model Rule 1.7 concerns conflicts surrounding current clients and states:

> (a) Except as provided in paragraph (b), a lawyer shall not represent a client if the representation involves a concurrent conflict of interest. A concurrent conflict of interest exists if:
>
> > (1) the representation of one client will be directly adverse to another client; or
> >
> > (2) there is a significant risk that the representation of one or more clients will be materially limited by the lawyer's responsibilities to another client, a former client or a third person or by a personal interest of the lawyer.
>
> (b) Notwithstanding the existence of a concurrent conflict of interest under paragraph (a), a lawyer may represent a client if:
>
> > (1) the lawyer reasonably believes that the lawyer will be able to provide competent and diligent representation to each affected client;

(2) the representation is not prohibited by law;

(3) the representation does not involve the assertion of a claim by one client against another client represented by the lawyer in the same litigation or other proceeding before a tribunal; and

(4) each affected client gives informed consent, confirmed in writing.

ABA Model Rules of Professional Conduct (2009) ("ABA Model Rules") at Rule 1.7. Comment [6] to Rule 1.7 expounds on the purpose of the rule and certain practical considerations:

> [6] Loyalty to a current client prohibits undertaking representation directly adverse to that client without that client's informed consent. Thus, absent consent, a lawyer may not act as an advocate in one matter against a person the lawyer represents in some other matter, even when the matters are wholly unrelated. The client as to whom the representation is directly adverse is likely to feel betrayed, and the resulting damage to the client-lawyer relationship is likely to impair the lawyer's ability to represent the client effectively. In addition, the client on whose behalf the adverse representation is undertaken reasonably may fear that the lawyer will pursue that client's case less effectively out of deference to the other client, i.e., that the representation may be materially limited by the lawyer's interest in retaining the current client. Similarly, a directly adverse conflict may arise when a lawyer is required to cross-examine a client who appears as a witness in a lawsuit involving another client, as when the testimony will be damaging to the client who is represented in the lawsuit. On the other hand, simultaneous representation in unrelated matters of clients whose interests are only economically adverse, such as representation of competing economic enterprises in unrelated litigation, does not ordinarily constitute a conflict of interest and thus may not require consent of the respective clients.

Id. at Rule 1.7, Comment [6]. Comment [8] provides further examples of how advocacy can be limited because of a direct conflict:

> [8] Even where there is no direct adverseness, a conflict of interest exists if there is a significant risk that a lawyer's ability to consider, recommend or carry out an appropriate course of action for the client will be materially limited as a result of the lawyer's other responsibilities or interests. For example, a lawyer asked to represent several individuals seeking to form a joint venture is likely to be materially limited in the lawyer's ability to recommend or advocate all possible positions that each might take because of the lawyer's duty of loyalty to the others. The conflict in effect forecloses alternatives that would otherwise be available to the client. The mere possibility of subsequent harm does not itself require disclosure and consent. The critical questions are the likelihood that a difference in interests

> will eventuate and, if it does, whether it will materially interfere with the lawyer's independent professional judgment in considering alternatives or foreclose courses of action that reasonably should be pursued on behalf of the client.

Id. at Rule 1.7, Comment [8].

ABA Model Rule 1.9(a) concerns conflicts as between current and former clients and states: "A lawyer who has formerly represented a client in a matter shall not thereafter represent another person in the same or a substantially related matter in which that person's interests are materially adverse to the interests of the former client unless the former client gives informed consent, confirmed in writing." *Id.* The comments to Model Rule 1.9 explain that matters are "substantially related" for the purposes of this Rule "if they involve the same transaction or legal dispute or if there otherwise is a substantial risk that confidential factual information as would normally have been obtained in the prior representation would materially advance the client's position in the subsequent matter." *Id*. at Rule 1.9, Comment [3].

Model Rule 1.10(a) applies these two rules to law firms: "While lawyers are associated in a firm, none of them shall knowingly represent a client when any one of them practicing alone would be prohibited from doing so by Rules 1.7 or 1.9 . . . ." ABA Model Rules at Rule 1.10.

III. FACTUAL BACKGROUND

On behalf of Credo, F&R filed the complaint underlying this investigation on March 13, 2025. EDIS Doc. ID 845760 ("First Complaint"). The Complaint alleged certain active electrical cable ("AEC") products from Respondents infringe U.S. Patent Nos. 10,877,233 ("the 233 patent"), 11,012,252 ("the 252 patent"), and 11,032,111 ("the 111 patent") (together, "Asserted Patents"). First Complaint at ¶ 2. AECs are primarily used in data centers to enable high-speed

[redacted]

data transmission between servers and comprise "copper cables including a digital signal processor (DSP) or retimer." *Id.* at ¶¶ 18-19.

To support its allegations, Credo and F&R supplied claim charts comparing the independent claims to the features, capabilities, and components of each respondent's products. First Complaint, Exs. 34-42. To show certain limitations were met, all nine claim charts made explicit reference to the DSP/retimer inside the cable connector plug. *See generally id.* The DSP/retimers are associated with converting electrical "transit" signals to data streams (and vice versa), equalization of the signals, "clock and data recovery" on input signals, and "re-modulat[ion]" of data streams for transit—all based on programmable or fixed parameters. *See, e.g.*, First Complaint, Ex. 34 (233 patent, Amphenol) at 17-23; First Complaint, Ex. 38 (252 patent, Molex) at 2-12; First Complaint, Ex. 42 (111 patent, TE Connectivity) at 7-14; First Complaint at ¶¶ 28, 34, 40. The complaint further states that, for all Respondents, "components of the [accused AECs], including associated cables and clock and data recovery processors, are specifically designed for use in infringement of the Asserted Claims. Due to their specific designs within the AECs, components of the Accused Products do not have any substantial noninfringing uses." *Id.* at ¶¶ 47, 53, 59. The DSP/retimers relied on in the charts come from one of two non-party sources: Broadcom or Marvell. *See generally* First Complaint, Exs. 34-42. However, as noted in Credo's opposition to the present motion, the complaint "did not accuse Marvell of infringement of any kind—not direct infringement, contributory infringement, induced infringement, or any other species of infringement." Opp'n at 7.

Shortly after the filing of the complaint, that same day of March 13, 2025, . Opp'n, Cordell Decl. at ¶ 3. By way of background, and according to Marvell, Mot. at 2 (citing Mot., Kyriacou Decl. at ¶ 11); *see* Opp'n at 13 ("As Marvell explains in the Motion, Fish has represented Marvell in intellectual property matters for years, and Fish's trademark work for Marvell is ongoing."). F&R represented Marvell in patent litigation on numerous occasions, most recently as defendant against Computer Circuits Operations LLC ("CCO Litigation") in 2020. Mot. at 3, 3 n.1; Mot., Kyriacou Decl. at ¶¶ 8-10.

On the March 13, 2025, *See* Opp'n, Cordell Decl. at ¶¶ 4-5; Mot., Kyriacou Decl. at ¶ 16. Marvell *See id.* According to F&R, *See* Opp'n, Cordell Decl. at ¶ 5; *see* Mot., Kyriacou Decl. at ¶ 16. Opp'n, Cordell Decl. at ¶ 5.

Mot., Kyriacou Decl. at ¶ 19 ("[We] urged Fish to do the right thing."). again Opp'n, Cordell Decl. at ¶ 6. Mot., Kyriacou Decl. at ¶ 19; *see* Opp'n, Cordell Decl. at ¶ 7.

On March 18, 2025, Credo filed an amended complaint ("Second Complaint") with all references to Marvell and its products removed. *See* EDIS Doc. ID 846150; Opp'n, Cordell Decl. at ¶ 8. Marvell's in-house counsel explains, "[b]ased on these amendments, Marvell believed the issue was resolved." Mot., Kyriacou Decl. at ¶ 19.

Later that month, on March 31, 2025, upon request of the Staff Credo filed a second supplement to the complaint which clarified the scope of the investigation. In it, Credo represented that certain types of cables were not within the scope—specifically, cables such as active optical cables or active copper cables "without digital signal support elements such as a digital signal processor (DSP) or retimer":

> Regarding the plain English description of the category of accused products pursuant to Commission Rules 210.12(a)(12) and 210.10(b)(1) in paragraph 19 of the Amended Complaint, Complainants clarify, based on an inquiry from OUII, that the plain English description of the category of accused products is "active electrical cables, which are copper cables including high bandwidth connectors, high speed metal conductors, and digital signal support elements such as a digital signal processor (DSP) or retimer, and components thereof." Active electrical

> cables do not include passive direct attach cables (DACs), active optical cables (AOCs), and active copper cables (ACCs) without digital signal support elements such as a digital signal processor (DSP) or retimer.

EDIS Doc. ID 847363. A third supplement, not pertinent to this motion, was filed thereafter. EDIS Doc. ID 848059.

The investigation was then instituted on April 18, 2025, upon publication in the *Federal Register*. 90 Fed. Reg. 16551-2. The Notice of Institution provided the following plain language description of the accused products which defines the scope of the investigation: "active electrical cables, which are copper cables including high bandwidth connectors, high speed metal conductors, and digital signal support elements such as a digital signal processor (DSP) ore retimer, and components thereof." *Id.* at 16552. The notice added in an unusual footnote:

> In this plain English statement of the scope of the investigation, "components thereof" is included pursuant to the allegations in the amended complaint. To the extent that the complainants have included such an allegation based upon a concern regarding specific components, the complainants should, during the course of this investigation, seek adjudication and specifically identify the components of the claimed invention sought for exclusion. The lack of adjudication of specific components, however, would not affect any later ability to adjudicate and remedy circumvention through the importation of components with additional enforcement actions.

Id. at 16552, n.1.

Then, during fact discovery, on June 12, 2025, Credo caused a subpoena to issue against Marvell through the law firm of Dowd Scheffel PLLC ("Dowd Scheffel"). Mot. at 8 (citing Mot., Ex. 11); Opp'n at 11. The subpoena sought information on "Marvell AEC Components" because these components "employ or include functionality or features that, as part of the Respondents' AECs, may practice one or more limitations of the asserted claims and therefore contribute to the accused infringement by the Accused AECs." Mot., Ex. 11 at 1-2; *see* Opp'n at 11. Marvell

served objections to the subpoena on June 30, 2025, and took the position that, "[b]y withdrawing and removing all allegations against Marvell AEC Components that were in the Complaint, these amendments necessarily removed Marvell AEC Components from the scope of the Investigation . . .. Accordingly, no discovery as to Marvell is relevant to any claim or defense of any party." Mot., Ex. 12 at 2. Opp'n, Cordell Decl. at ¶ 10. , Opp'n, Ex. I. The present motion was filed two days later.

IV. PARTIES' ARGUMENTS

A. Marvell

As noted above, the basis of Marvell's motion is that F&R is in violation of ABA Model Rules of Professional Conduct 1.7 and 1.9 through their representation of Credo in this investigation. Mot. at 1. Model Rule 1.7 prevents representation of a client if doing so involves a concurrent conflict of interest, meaning that representation of one current client is "directly adverse" to another current client. *See generally* ABA Model Rules at Rule 1.7. Marvell states, correctly, that there is no dispute F&R currently represents both Credo and Marvell, and that it makes no difference whether exclusive sets of F&R attorneys make up that representation because

Model Rule 1.10 imputes the conflict of one attorney to the entire firm. Mot. at 13. Marvell adds that "Fish never informed Marvell of the conflict or requested a waiver of the conflict—Marvell had to learn of the conflict through its own diligence when Fish filed the Complaint in this Investigation." *Id.*

Thus, the primary issue is whether Credo is "directly adverse" to Marvell via its role as complainants' counsel in this investigation. Marvell argues it is "indisputable" that F&R is directly adverse based on the claims Credo is advancing. Mot. at 13. Marvell contends, "[a]ll the asserted patents rely, at least in part, on retimer chips (*e.g.*, Marvell or Broadcom chips) to satisfy the claims. Indeed every single infringement chart filed with the original Complaint asserted that the claim limitations were met by Marvell retimer products." *Id.* at 13-14 (citing First Complaint, Exs. 34-45). Marvell specifically highlights claim 1 of the 111 patent as "instructive as it is directed to functionality contained within the retimer chip (referring to the *DSP chip functionality* and *Marvell Alaska chip* functionality throughout the claim chart), rather than the AEC product overall—thus showing direct and legal adversity to Marvell based upon Fish's infringement accusations." *Id.* at 14 (citing First Compliant, Ex. 36 at 1-16; First Complaint, Ex. 39 at 1-11; First Complaint, Ex. 42 at 1-14) (emphasis by Marvell). Marvell asserts this focus on the DSP/retimer "directly refutes Fish's [June 27, 2025] contention that Marvell retimer chips just happen to be 'one of multiple parts and designs' within the AECs that are the subject [of] the Investigation." *Id.* at 17 (citing Mot., Ex. 18 at 3); *see id.* at 22 ("Credo's allegations against Respondents' products *depend on* showing that Marvell's retimer chips meet various limitations of he asserted patent claims." (emphasis by Marvell)). This is in addition to the economic

adversity Marvell would face should its DSP/retimer customers be barred from importing AEC products into the United States. *See* Mot. at 25. Accordingly, Marvell contends there is direct adversity under Model Rule 1.7 and draws comparisons to *Celgard, LLC v. LG Chem, Ltd.*, 594 F. App'x 669 (Fed. Cir. 2014) and *Freedom Wireless, Inc. v. Bos. Commc'ns Grp., Inc.*, No. 2006-1020, 2006 WL 8071423 (Fed. Cir. Mar. 20, 2006). Id. at 18[1], 21-24.

Marvell further contends there is a violation of Model Rule 1.9 regarding past representation. The rule prevents representation of a client "in the same or substantially related matter in which that person's interests are materially adverse to the interests of the former client. . ." unless the former gives consent in writing. *See generally* ABA Model Rules at Rule 1.9. Relatedness can be met if the representations involve the same transaction or legal dispute, or if there is a "substantial risk" that confidential information gained during the former representation may "materially advance" the new client's position. *Id.* at Rule 1.9, Comment 3. Marvell argues that in the course of its twenty-year relationship, "Fish has been privy to all manner of Marvell's most sensitive technical information, non-technical information, and legal strategy." Mot. at 28-29; *see* Mot., Kyriacou Decl. at ¶¶ 6-7. Marvell particularly points to the CCO Litigation and its asserted patent involving conditioning data streams with skew and delays in cloud-scale server environments, allegedly similar to Credo's asserted patents. *See* Mot. at 29-30 (citing Mot., Ex. 20 (U.S. Patent No. 7,278,069 ("the 069 patent")); Mot., Ex. 19 (CCO Litigation Complaint)).

---

[1] Marvell finds direct adversity is also demonstrated by the fact that F&R's trademark work for Marvell involves the ALASKA trademark, which is the name of the DSP/retimer in the AEC accused products in this investigation. *See* Mot. at 18-21, 31, 34.

Marvell explains, "[d]uring the course of that representation, Fish was given access to highly confidential technical information and conducted multiple interviews with engineering witnesses." *Id.* at 30 (citing Mot., Kyriacou Decl. at ¶ 8).

Given these conflicts, Marvell contends disqualification is warranted. Mot. at 31. Marvell asserts F&R's actions are "egregious" in light of the length of time, amount of billings, and nature of F&R's trademark and patent litigation work as potentially affected by the outcome of the present investigation. *See id.* at 31-32. Marvell characterizes the removal of Marvell content from the Second Complaint as a disingenuous attempt to cure the conflict (*id.* at 32-33, 35 n.17), argues the conflict was completely foreseeable given the overlap of in-house counsel between the two entities (*id.* at 34), and further argues the prejudice to Marvell far outweighs any prejudice to Credo in having to select new counsel for the investigation, which remains in the early stages of discovery (*see generally id.* at 33-36). Marvell further posits that F&R's dual representation "diminishes the public's confidence in the integrity of the bar" and "shine[s] a poor light on the legal profession as a whole" (*id.* at 37 (citing Network Interface, Inv. No. 337-TA-455, Order No. 69 at 10)) and states no use of the Dowd Scheffel firm—for the subpoena or any other direct interaction with Marvell—removes the fact that F&R's continued representation of Credo acts "in furtherance of legal determinations and an exclusion order that is detrimental to Marvell and its trademarked products" (*id.* at 39 (citing *Freedom Wireless*, 2006 WL 8071423, at *3; *Network Interface*, Inv. No. 337-TA-455, Order No. 69 at 7)).

Marvell also argues, however, that the amendment leading to the Second Complaint "should remove Respondents' products containing Marvell chips from the scope of this

Investigation." Mot. at 33. Marvell reasons, without legal citation, that "[b]y amending the Complaint to completely excise Marvell and its products, Credo has waived its claims against Respondents' products that include Marvell products." *Id.* Marvell suggests that this, perhaps, could be an alternate solution to disqualification. *Id.*

B. Respondents

In their filing, Respondents "take no position on the portion of Marvell's motion regarding disqualification of Fish & Richardson." R Resp. at 1. Rather, "Respondents support the portion of Marvell's motion seeking to exclude its retimers and AECs containing them from the scope of this Investigation." *Id.* They observe that "[t]his Amended Complaint, which lacked any mention of Marvell retimers, was the complaint instituted by the Commission" (*id.* at 3) and contend, as a matter of law, that "products withdrawn from the complaint must be considered withdrawn from the allegations," meaning "outside the scope of this Investigation" (*id.* at 5, 9). For support, Respondents cite previous section 337 investigations involving sanctions, limitations on discovery, and naming of particular respondents. *Id.* at 6-7 (citing *Certain Power Semiconductors, and Mobile Devices and Computers Containing Same* ("*Power Semiconductors*"), Inv. No. 337-TA-1308, Order No. 29 at 2 (Nov. 22, 2022); *Certain Audiovisual Components and Products Containing the Same* ("*Audiovisual Components*"), Inv. No. 337-TA-837, Order No. 15 at 1 (Aug. 22, 2012); *Kyocera Wireless Corp. v. Int'l Trade Comm'n*, 545 F.3d 1340, 1357 (Fed. Cir. 2008)). Notably, Respondents report that as of the current stage of discovery, "Credo does not once cite any Marvell retimer in their infringement contentions, although they do cite documents related to retimers of other suppliers such as Broadcom." *Id.* at 8-9.

C. Credo and F&R

Credo begins its opposition by arguing that Marvell's motion, if successful, amounts to a nonsensical rule that prohibits "a firm from pursuing an infringement claim against companies whose products utilize a part made by a firm client" which "would bring ITC practice to a halt." Opp'n at 1, 20 n.12; *see id.* at 25-26 ("Imagine having to clear conflicts on every circuit board, touch screen, memory module, processor, communications chips and supporting software in both accused and domestic industry cell phone systems."). Credo reasons that because it, through F&R, has not accused Marvell of direct or indirect infringement, "[t]here simply is no legal threat to Marvell." *Id.* Nevertheless, Credo assures that "AEC systems that use Marvell are within the scope of the Investigation" and disqualification of F&R would otherwise have "profoundly prejudicial effects on Credo." *Id.* at 2.

As to the alleged conflict under Model Rule 1.7, Credo argues that "directly adverse" in the rule "must involve a clear and immediate opposition of legal interests" such that "[i]ndirect or general adversities, such as competing economic interests, do not fall within the scope of 'directly adverse' under Model Rule 1.7(a)." Opp'n at 13-14 (citing ABA Model Rules at Rule 1.7, Comment [6]). With that limitation in mind, Credo argues the remedy in this investigation can only have an economic effect on Marvell:

> [A]s one retimer supplier (of many) to Respondents, Marvell will, at most, suffer a negligible economic harm if the Commission issues the requested remedial orders because those Respondents using Marvell chips will have to shift sales to other jurisdictions. Marvell will be able to continue to sell its retimer parts to U.S. customers. Marvell will also be able to continue to sell its retimer parts into the many non-AEC applications it touts on its website. Ex. G at 2. The only effect of remedial orders in this case will be to stop Respondents from importing infringing AEC systems and the impact on Marvell is the same as any parts supplier to these Respondents. This does not constitute a violation of Model Rule 1.7.

Id. at 15-16. Credo analogizes to the denial of disqualification in *Certain Graphics Processing Chips, Systems on a Chip, and Products Containing the Same* ("*Graphics Processing*"), Inv. No. 337-TA-941, Order No. 7 at 1 (Apr. 13, 2015). *Id.* at 17-19 ("But like TSMC in *Graphics Processing Chips*, such orders will not impose legal obligations or impair Marvell's legal rights."); *see id.* at 21 (citing *Baseband Processor Chips*, Inv. No. 337-TA-543, Order No. 29 at 13-14, 22-23).

Additionally, Credo strenuously disputes that its infringement allegations in this investigation have much of a connection to Marvell's DSP/retimers, but are rather focused on "Respondents and their AECs." Opp'n at 19; *see id.* at 20 ("It is this programmed and assembled product that Credo alleges infringes the Asserted Patents."). Specifically, Credo asserts:

> Retimers, like the Marvell retimer component, are sold as a configurable module that the Respondents must program, configure, and design into the accused AECs. . . . [redacted] [A]fter programming and configuration, the Respondents implement a specific design unique to each Respondent [redacted]

Id. at 19-20 (citations omitted). Credo continues, "[i]t is AEC manufacturers, like Respondents, that assemble the accused AEC systems from many parts, [redacted] and purchase and configure retimer chips like Marvell's in an infringing manner." *Id.* at 23 (citing Opp'n, Barnetson Decl. at ¶¶ 4-5); *see id.* at 27 ("[a]s explained above, Respondents ultimately program the retimer [redacted]

28 ("Respondents could implement firmware in a non-infringing manner, but they instead choose to operate their AECs in an infringing manner, to, among other things, claim to meet various industry specifications, such as the IEEE 802.3ck standard.").

Credo also looks to the claim charts attached to First Complaint to show a lack of focus on DSP/retimers:

> While Marvell claims that Credo's claim chart "is directed to functionality contained within" a Marvell chip (Mot. at 14–17) and attempts to distinguish *Graphics Processing Chips* on this basis (Mot. at 27), Marvell fails to analyze the charts attached to the original complaint. Instead, it bases its arguments on selective excerpts. *Compare* Mot. at 14–17 *with* Ex. H at 1–14. The claim chart submitted by Credo makes clear that its infringement allegations concern the AECs. Element [1a] recites "selecting one of multiple registers to specify initial pre-equalizer coefficient values, each of the multiple registers corresponding to a different channel model." *Id*. at 7. For this element, Credo asserts "[f]or example, the Accused TE Connectivity Products use OSFP form factor pluggable modules" (*id*. at 8) that provide "support for short and long channel modes" (*id.* at 9), *i.e.*, functionality of unique cables for specific applications. Credo alleges that the way in which Respondents program the chips within their AECs to account for short and long channels satisfies element [1a], not anything performed by Marvell. As a further example, element [1c] recites "using the updated pre-equalizer coefficient values to convey a transmit data stream." *Id*. at 12. Such "pre-equalizer coefficient values" are chosen and implemented by the Respondents, and transmitting such data streams of course requires a cable system—not just a chip. Marvell's comparison is misleading.

Id. at 20-21.

As for Model Rule 1.9, Credo argues the CCO Litigation was substantially different than the present investigation. Opp'n at 28. It explains, "[t]he products at issue in *CCO* were memory controllers, particularly, DDR3, DDR4, LPDDR3, and LPDDR4 memory controllers" and that patent "related to delays between competing memory signals, and compensating for that delay by measuring and using timing offsets." *Id.* at 29. Credo suggests that Marvell's joint description of

both cases being about "signal misalignment, inter-symbol interference (ISI), and channel attenuation" is overly broad and swallows up the entire field of data communications. *Id.* at 30 (citing *Certain Semiconductor Devices and Consumer Audiovisual Products Containing the Same*, Inv. No. 337-TA-1047, Order No. 11 at 12-13 (July 7, 2017)). Overall, Credo adds, "ALJs regularly deny motions for disqualification under Rule 1.9." *Id.* at 30-31 (citations omitted).

Even if there was a conflict of interest, Credo contends a balance of prejudices does not warrant disqualification. Opp'n at 31-32. Credo touts the "substantial factual and legal expertise" F&R has developed for this investigation, and asserts disqualification would involve another firm duplicating this effort at great expense to Credo. *See generally id.* at 32-34. Credo views the prejudice to Marvell as minimal and/or purely economic because no conflict exists. *Id.* at 33. And as for knowledge gained through prior representation on trademark matters and the CCO Litigation, Credo argues *Id.* at 37. Further, *Id.* at 39 (citing Opp'n, Ex. I; Opp'n, Cordell Decl. at ¶ 9). In the event disqualification is warranted, *Id.* at 39 n.22.

As for the scope of the investigation, Credo disputes that its complaint amendment exempts AECs using Marvell DSP/retimers from discovery or from any remedial relief. Opp'n at

8, 34-36. Credo draws sharp contrasts between this change and its explicit carve-out of AECs sold to Amazon, or its third supplement explicitly withdrawing all contentions against respondent Volex PLC. *Id.* at 9, 35-36; *see* First Complaint at ¶ 22 ("Articles imported for use by Amazon Data Services, Inc. or its affiliates, directly or indirectly, are not accused and are authorized and would not be subject to any requested remedial order."); EDIS Doc. ID 848059 ("Pursuant to Commission Rule 210.14(a), [Credo] hereby withdraw[s] all allegations against proposed respondent Volex PLC and provide the following amendments to their Amended Complaint, filed on March 18, 2025[.]").

Credo lastly argues that Commission Rule 210.10 requires a non-party, such as Marvell, to first move to intervene in the investigation before it can move to disqualify counsel for a party. Opp'n at 2 n.1. Thus, the motion to disqualify is "fatally defective" and, presumably, can be denied for this reason alone. *See id.*

D. Staff

Staff supports Marvell's motion under both Model Rules 1.7 and 1.9 even though it notes that disqualification in a section 337 investigation "has rarely been exercised, as disqualification of counsel is drastic and disfavored." Staff Resp. at 3 (citing *Network Interface*, Inv. No. 337-TA-455, Order No. 26 at 3). Staff adds, "disqualification is used 'only when absolutely necessary,' with 'the movant bearing the burden of showing that disqualification is warranted by a high standard of proof.'" *Id.* at 4 (citing, *inter alia*, *Semiconductor Chips*, Inv. No. 337-TA-605, Order no. 15 at 3).

Relevant to Model Rule 1.7, Staff finds there is direct adversity given Credo's oft-repeated position that discovery from Marvell is important to Credo's infringement claims. Staff Resp. at 7 (citing EDIS Doc. ID 857543 (Credo Discovery Letter); Mot., Ex. 11 (Subpoena to Marvell)), 9. Staff particularly highlights Credo's requests for production covering "[d]ocuments sufficient to show the structure and functionality related to the selection of registers to specify initial preequalizer coefficient values." *Id.* at 8 (citing Mot., Ex. 11 at Request No. 16). This evidence, according to Staff, demonstrates that "Marvell's chips remain an integral part of the direct infringement contentions against [Respondents'] AEC products that use Marvell chips" even though no infringement allegations have technical been leveled against Marvell. *Id.* at 9; *see id.* ("Contending that Marvell's chips play a part in the infringement of the Asserted Patents and pursuing an exclusion order against products that incorporate those very chips would seem to present an actual conflict of interest."); *see also id.* at 10 (noting the DSP or retimer is listed specifically in the Notice of Institution); Staff Reply at 2 ("[Credo's] characterization files in the face of the emphasis that Credo itself has placed on discovery into the chips. Credo has, in fact, *targeted* the Marvell chips, not dozens of other parts of those accused [AEC]s . . .." (emphasis by Staff)).

For Model Rule 1.9, Staff first refers to Marvell's identification of "a dozen patent infringement cases between 2007 and 2020 in which Credo's lead counsel in this Investigation represented Marvell" and because of which, Staff argues, F&R had access to sensitive technical and financial information. Staff Resp. at 11 (citing Mot. at 3-4). Staff finds this is likely to be true for at least the CCO Litigation and that Credo "does not adequately address this point" in its

opposition. *Id.* at 12, 13. As to the relatedness between the CCO Litigation and the present investigation, Staff argues:

> The dispute between the two sides about the similarity of the technologies involved in the *CCO* matter and this Investigation creates, at least, a doubt that should be resolved in favor of Marvell. At bottom, the Staff is of the view that the subject matters involved here and in the *CCO* matter are close enough that they might potentially implicate claim construction, prior art/invalidity analysis, depositions of witnesses previously interviewed as friendly client employees, and Marvell's general patent litigation/settlement strategy. Any such knowledge of Marvell's playbook information gained over the years tips any doubt in favor of disqualification. *See Madukwe*, 552 F. Supp. at 462, *Innovative Memory Solutions*, 2015 U.S. Dist. LEXIS at *13 (stating "any doubts about whether disqualification is appropriate should be resolved in favor of the moving party, in order to ensure protection of client confidences.").

Id. at 13 (citing *Madukwe v. Del. State Univ.*, 552 F. Supp. 2d 458, 462 (D. Del. 2008); *Innovative Memory Solns., Inc. v. Micron Tech., Inc.*, 2015 U.S. Dist. LEXIS 63861, at *4 (D. Del. May 15, 2015)).

As for the remedy, Staff argues "the prejudice to Marvell is self-evident" but the prejudice to Credo is largely of its own making. Staff Resp. at 13-14. Staff states, "[t]here is no dispute that Credo was aware of Fish's relationship with Marvell because *Credo's* current general counsel is the one who signed the engagement letter with Fish on behalf of Marvell when he was *Marvell's* general counsel." *Id.* at 14 (emphasis by Staff). Staff also finds the present motion is not a harassing, tactical device given Marvell's continued communications with Credo and F&R since the filing of the First Complaint. *See id.* Staff concludes, "the facts here warrant disqualification and that Marvell's motion should be granted." *Id.*

V. ANALYSIS

A. Marvell Products are Within the Scope of the Investigation and not Exempt from any Relief on Violation

As a preliminary matter, Respondents' direct contention and Marvell's half-contention—that Credo's complaint amendment caused Marvell-based AECs to become outside the scope of the investigation and outside the scope of any relief—is false. As a general matter, limited exclusion orders cover any infringing products from the named respondent, including *but not limited* to those products listed in the complaint or determined to be infringing during the investigation. *Certain Movable Barrier Operator Systems and Components Thereof*, Inv. No. 337-TA-1118, Comm'n Op. at 34-35 (Jan. 12, 2021) (citing *Certain Optical Disk Controller Chips and Chipsets and Products Containing Same, Including DVD Players and PC Optical Storage Devices*, Inv. No. 337-TA-506, Comm'n Op. (Sep. 28, 2005)). Further, it is common in section 337 investigations for complainants to use discovery to expand or contract the set of products accused of infringement, as permitted by Commission Rule 210.27(b). *See, e.g.*, *Certain DC-DC Controllers and Products Containing the Same*, Inv. No. 337-TA-698, Order No.7 (March 12, 2010); *Certain Network Interface Cards and Access Points for Use in Direct Sequence Spread Spectrum Wireless Local Area Networks and Products Containing Same*, Inv. No. 337-TA-455, Order No. 34 at 5 (Aug. 30, 2001); *Certain Wireless communications Equipment, Articles Therein, and Products Containing the Same*, Inv. No. 337-TA-577, Order No. 14 at 2-3 (Jan. 11, 2007); *Certain Integrated Circuits, Chipsets, and Products Containing Same Including Televisions, Media Players, and Cameras*, Inv. 337-TA-709, Order No. 8 at 8-10 (June 18, 2010); Mot., Ex. 11 at Request No. 1 ("identify, by Respondent . . . each AEC Component manufactured for, offered

for sale to, or sold to any Respondent, identified by product name . . ., relevant part number . . and any naming convention or other information which You use to identify the AEC Components."); *see generally* 19 C.F.R. § 210.27(b). Thus, the absence of a particular product from the complaint cannot be viewed as protecting it from discovery or exclusion order.

As for whether the presence-then-withdrawal of that product is effective protection, Respondents and Marvell cite no sufficiently supporting authority. Respondents look to *Power Semiconductors,* but this case involved a motion for sanctions over a statement made in a complaint, then withdrawn. *See* Inv. No. 337-TA-1308, Order no. 29 at 2; R Resp. at 6. It had no effect on the scope of the investigation or remedy; only whether sanctions were warranted for misstatements in that particular document. *See id.* at 2 ("Here, Arigna withdrew the statement in paragraph 33 regarding Qovo products before the investigation was instituted—this was several months before Qorvo's motion for sanctions, and Arigna cannot be sanctioned under Commission Rule 210.4 based on a withdrawn statement."); 19 C.F.R. § 210.4(c), (d).

Respondents also cite Order No. 15 in *Audiovisual Components*. R Resp. at 6. To be sure, this terse order does suggest products not named in a complaint are outside the scope of discovery. *Audiovisual Components*, Inv. No. 337-TA-837, Order No. 15 at 2 ("The undersigned finds that complainants limited the scope of "accused products" when they identified the co-respondents as 'Funai's component suppliers' in the amended complaint. . . . Significantly, the undersigned did not find any other component supplier cited in the amended complaint."). And a second order made the same suggestion in the investigation just weeks later. *Audiovisual Components*, Inv. No. 337-TA-837, Order No. 17 (Aug. 23, 2012) (denying additional discovery requests from

respondent that allegedly went beyond the particular patents and products identified in the complaint). Yet, when the complainants moved for reconsideration of Order no. 15, arguing "'Order No. 15 rewrites decades of Commission precedent…,'" the administrative law judge expressly stated, *twice*, that "Order No. 15 did not hold that the scope of this investigation is determined by the contents of the amended complaint rather than the notice of investigation." *Audiovisual Components*, Inv. No. 337-TA-837, Order No. 24 at 2 (Sep. 6, 2012); *see id.* ("As indicated above, Order No. 15 did not hold that the amended complaint defined the scope of the investigation."). Respondents fail to mention this subsequent history. R Resp. at 6. So the *Audiovisual Components* orders, even when treated as Commission precedent (which they are not), do not stand for a rule in which the complaint defines either the scope of the investigation or of the exclusionary relief.

Respondents further look to the Federal Circuit's holding in *Kyocera Wireless Corp. v. Int'l Trade Comm'n*, 545 F.3d 1340, 1357 (Fed. Cir. 2008). R Resp. at 7. Yet this case turned on respondents actually named in a complaint and unnamed third parties, and how this limits the scope of exclusionary relief:

> On appeal, Qualcomm and the third-party appellants argue, inter alia, that the Commission exceeded its statutory authority by issuing an LEO that excludes imports of downstream manufacturers who were not named as respondents in Broadcom's initial complaint. According to these appellants, LEOs may only exclude the products of named parties. Broadcom and the Commission maintain that the ITC has authority to order an LEO which excludes all of a respondent's articles that are determined to violate, regardless of the identity of the importer.

Kyocera, 545 F.3d at 1355. Naming or not-naming particular respondents in a complaint is important, of course, because limited exclusion orders (LEOs) are by statute limited to the "person

violating the provision of this section." *Id.* at 1356-7 (citing 19 U.S.C. § 1337(d)(1), (2)). There is no such must-be-named condition for the products of a named respondent, however.

Accordingly, AECs manufactured and imported, or sold for importation, and containing Marvell DSP/retimers, are within the scope of the investigation and not automatically exempt from any exclusionary relief.

B. Model Rule 1.7

The record reflects a Model Rule 1.7 conflict. There is no dispute that F&R represents Marvell and Credo concurrently, and no waivers have been given. Thus, the issue is whether "the representation of one client will be directly adverse to another client" or "there is a significant risk that the representation of one or more clients will be materially limited by the lawyer's responsibilities to another client." ABA Model Rules at Rule 1.7. Both metrics are satisfied.

The available evidence shows that representation of Credo in this investigation will be directly adverse to Marvell. As settled above, this investigation involves allegations that the AEC products of Respondents which include Marvell DSP/retimers infringe all three of the Asserted Patents. More than that, the features of the DSP/retimers are central to the asserted claims of these patents, and to AECs overall as viewed by industry.

For example, the 233 patent teaches in its background that an "[a]ctive ethernet cable (AEC) is a newly-designed cable that offers affordable high-bandwidth data transport over distance spans up to at least seven meters using hard-wired data recovery and remodulation (DRR) chips in the cable connectors" while direct-attach cables (DAC) or active optical cables (AOC) have certain drawbacks. 233 patent at 1:15-36. The patent continues:

> By performing DRR of both inbound and outbound data streams, the illustrative cable ensures that the electrical signals transiting the cable conductors are able to withstand the attenuation and interference encountered between the cable's end connectors, thereby enabling consistently robust data transfer over extended cable lengths to be assured without consideration of these factors.

Id. at 4:15-22. Consistent therewith, asserted claim 1 reads:

> 1. A cable that comprises:
>
> [1a] a first data recovery and re-modulation (DRR) device that exchanges inbound and outbound multi-lane data streams with a first host interface port via a first end connector plug;
>
> [1b] a second DRR device that exchanges inbound and outbound multi-lane data streams with a second host interface port via a second end connector plug; and
>
> [1c] electrical conductors connecting the first and second DRR devices to convey electrical transit signals therebetween,
>
> [1d] the first DRR device converting between said electrical transit signals and said inbound and outbound multi-lane data streams for the first host interface port, and
>
> [1e] the second DRR device converting between said electrical transit signals and said inbound and outbound multi-lane data streams for the second host interface port,
>
> [1f] the first and second DRR devices providing pre-equalization of the electrical transit signals using transmit filter coefficient values stored in nonvolatile memories.

Id. at cl. 1 (annotated). Credo's Complaint refers to DRR in its summary of the 233 patent as well. First Complaint at ¶¶ 27-28. Obviously, DRR is central to the invention and any purported novelty.

Credo's claim charts clearly and consistently allege that DRR occurs within the DSP/retimer of any given AEC, whether it be Marvell's, Broadcom's, or other supplier's,

including Credo. The complete theory for limitations [1a], [1d], and [1f] as concerning respondent Amphenol, and its DSPs from either Broadcom or Marvell, is reproduced below:[2]

[1a] a first data recovery and re-modulation (DRR) device that exchanges inbound and outbound multi-lane data streams with a first host interface port via a first end connector plug;	The Accused Amphenol Products comprise a first data recovery and re-modulation (DRR) device that exchanges inbound and outbound multi-lane data streams with a first host interface port via a first end connector plug. For example, the first DRR device is a first digital signal processor ("DSP") at one end of the active cable. See, e.g.:

'233 Patent	Accused Amphenol Products
Claim 1	
	OSFP (Octal Small Form Factor Pluggable) Copper Cable Assemblies **200G / 400G / 800G / 1.6T SOLUTIONS** Amphenol is leading the industry in OSFP cable development. Our Electronics Products 'Product of the Year' award-winning OSFP (Octal Small Form Factor Pluggable) cable assemblies are compatible with 25G/lane channel NRZ up to 224G/lane channel PAM4 signaling protocols that allow the cables to deliver aggregate bandwidths of 200G, 400G, 800G, and 1.6T per cable assembly. Available in both Passive and Active variants. ▪ Comprehensive system integrated interconnect design for copper or optical based cable solutions ▪ Addresses current and future market desired bandwidth port capability requirements ▪ Optimized heat dissipative and airflow features to maximize the heat dissipative properties of the system ▪ Data Rate: 25G NRZ / 56G PAM4 / 112G PAM4 / 224G PAM4 ▪ Cable sizes: 25AWG – 32AWG ▪ 112G Passive cable lengths up to 2 meters ▪ 112G Active cable lengths up to 4 meters ▪ 224G Passive cable lengths up to 1 meter Ex. 46, *Amphenol OSFP Copper Cable Assemblies Datasheet.*

[2] Limitation [1b] is omitted because it is largely a copy of limitation [1a]; limitation [1c] trivially refers to the copper connectors between the two plugs of the AEC; and limitation [1e] is omitted because it is largely a copy of limitation [1d].

[redacted]

'233 Patent	Accused Amphenol Products
Claim 1	

PART NUMBER	DESCRIPTION	PRODUCT DRAWING	3D MODEL (STP)	STATUS	DISTRIBUTOR STOCK CHECK
NJJJN8-0004	OSFP Cable Assembly, DSP Active, 32AWG, 4M, 112G / Lane, Flex Sleeve			Active	
NJJJN8-0007	OSFP Cable Assembly, DSP Active, 32AWG, 1.5M, 112G / Lane, Flex Sleeve			Active	
NJJJN8-0008	OSFP Cable Assembly, DSP Active, 32AWG, 2.5M, 112G / Lane, Flex Sleeve			Active	
NJJJN8-0009	OSFP Cable Assembly, DSP Active, 32AWG, 3.5M, 112G / Lane, Flex Sleeve			Active	
NJJJN80001	OSFP Cable Assembly, DSP Active, 32AWG, 1M, 112G / Lane, Flex Sleeve			Active	
NJJJN80002	OSFP Cable Assembly, DSP Active, 32AWG, 2M, 112G / Lane, Flex Sleeve			Active	
NJJJN80003	OSFP Cable Assembly, DSP Active, 32AWG, 3M, 112G / Lane, Flex Sleeve			Active	
NJJJN80010	OSFP Cable Assembly, DSP Active, 32AWG, 4.5M, 112G / Lane, Flex Sleeve			Active	

Ex. 47, *Amphenol OSFP Cable Assemblies Webpage* (annotated).

'233 Patent	Accused Amphenol Products
Claim 1	

QSFP DD Cable Assemblies

200G / 400G / 800G SOLUTIONS

Amphenol's QSFP DD (Double Density) copper cable assemblies double the number of channels from 4 to 8 lanes when compared to the existing QSFP cabling systems, enabling more bandwidth within the same mechanical envelope. Compatible with 25G/Lane NRZ up to 112G/Lane PAM4 signaling protocols that allow cables to deliver aggregate bandwidths of 200G, 400G, and 800G per cable assembly. Available in both Passive and Active variants.

- Addresses current and future market desired bandwidth port capability requirements
- Backwards mate compatible with QSFP receptacles
- Data Rate: 25G NRZ / 56G PAM4 / 112G PAM4
- Cable sizes: 25AWG – 32AWG
- 112G Passive cable lengths up to 2 meters
- 112G Active cable lengths up to 4 meters
- Ultra-low-power Active Electrical Cable featuring Smart CDR SoC up to 3 meters at only 4.5W per side

TARGET MARKETS

Ex. 79, *Amphenol QSFP DD Cable Assemblies Datasheet*.

For example, the DSPs in the Accused Products are manufactured by Broadcom and others. The first DSP in the Accused Amphenol Products is a retimer that exchanges inbound and outbound multi-lane data streams with a first host interface port via a first end connector plug.

See, e.g.:

- Amphenol will highlight OAI expansion version 1.0, featuring Broadcom's 1.6T (2x800G), 5nm retimer PHY, ExaMAX2® 112G backplane connector, OSFP 112 I/O connector and Mini Cool Edge, Expo Hall, Booth A8.

[redacted]

'233 Patent	Accused Amphenol Products
Claim 1	
	Ex. 48, *Broadcom 2022 OCP Global Summit Press Release* Key components used for validation include (1) Broadcom's BCM85361 1.6Tbps retimer/crossbar and Amphenol's ExaMAX2 112Gb/s high-speed backplane connector system. • Broadcom's BCM85361 is a 16 lane, 112G SerDes retimer with support for long-reach backplanes with ~45dB of insertion loss and passive DAC cables up to 3 meters. The retimer supports Ethernet rates up to 2 x 800 GbE for scale-out and can also be configured as a flexible crossbar for scale-up requirements. BCM85361 is designed in the advanced 5nm process node, delivering low power to meet the challenges of increasing energy consumption in data centers. • Amphenol's ExaMAX2 connector system delivers industry leading SI performance needed to support OAI applications. The Vertical Header (VH) P/N: 10167063c and Right-Angle Receptacle (RAR) P/N:10167059c are configured as 4x16 and provide the connectivity to support both scale-out and switch implementations of the Expansion Card. The innovative beam-on-beam mating interface of the ExaMAX2 solution demonstrates a resonance-free Insertion Loss profile thru 60GHz and superb Return Loss performance. Ex. 49, *Broadcom B-Connected Blog Post*. Overview The Broadcom® BCM87850 is a single-chip, eight-lane, ultra-low power, ultra-low latency PHY that integrates retimer and equalizer to support active cable applications. The BCM87850 is capable of equalizing 22 dB of loss on both the client-side and line-side interfaces. Each lane is capable of multiple data rates, including 106.25 Gb/s. The on-chip clock synthesis is performed by a low-cost 312.5-MHz reference clock through high-frequency, low jitter phase-locked loops (PLLs). The BCM87850 is fabricated in low-power 7-nm CMOS technology and is available in a 12 mm × 12 mm, 0.5-mm pitch, 485-ball BGA, RoHS-compliant package. Ex. 50, *Broadcom BCM87850 Product Brief* (annotated).

[redacted]

'233 Patent	Accused Amphenol Products
Claim 1	
	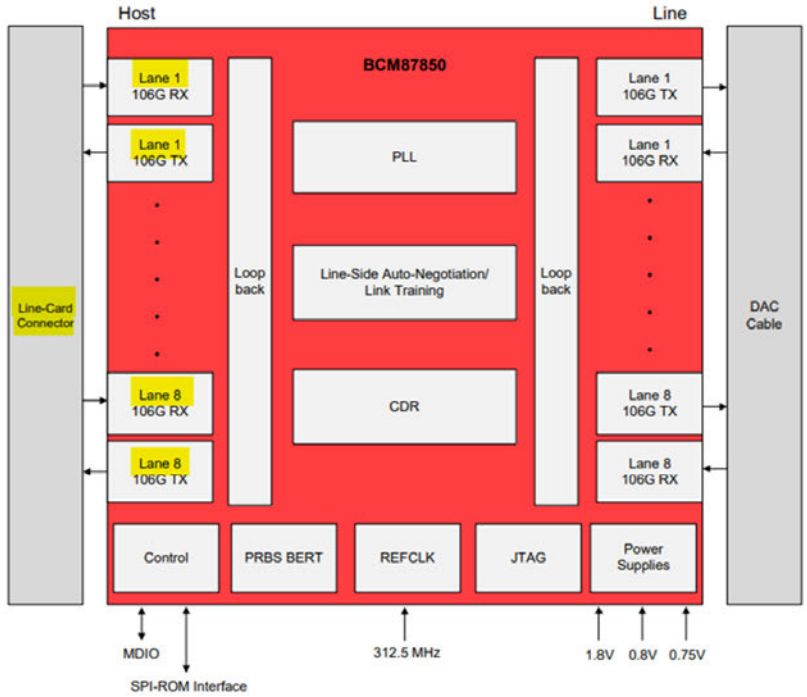 Ex. 50, *Broadcom BCM87850 Product Brief* (annotated).

'233 Patent	Accused Amphenol Products
Claim 1	
	Overview The Marvell Alaska A MV-CHA180C0C 800G is a PAM4 DSP retimer for 800G Active Electrical Cable (AEC) application, optimized for Switch to Switch and Switch to Server connectivity inside next generation cloud data center, high-performance computing and AI systems. Alaska A 800G is a retimer device which utilizes a 112G Gbps PAM4 DSP SERDES. There are 8-host and 8-line ports with each receiver port being able to recover 112Gbps PAM-4 signals and transmit to partnered TX. It can provide up to 800G (8 x 112G) full duplex mission mode traffic.

[redacted]

'233 Patent	Accused Amphenol Products
Claim 1	
	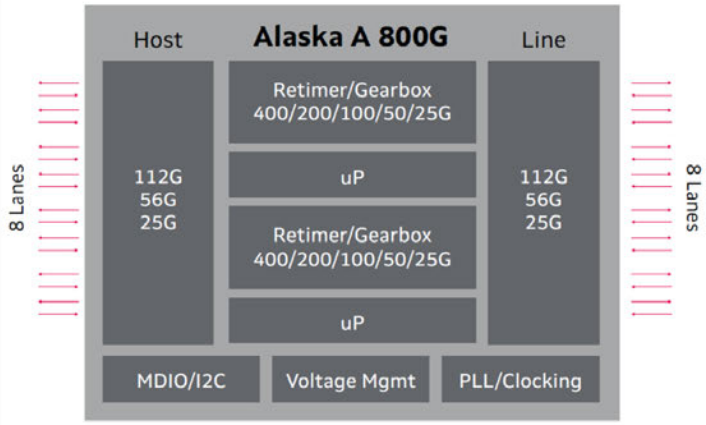 Ex. 51, *Marvell Alaska Product Brief* (annotated).

. . . .

[1d] the first DRR device converting between said electrical transit signals and said inbound and outbound multi-lane data streams for the first host interface port, and	The first DRR device in the Accused Amphenol Products converts between said electrical transit signals and said inbound and outbound multi-lane data streams for the first host interface port. For example, the first DSP receives electrical transit signals from the cable and converts them (via the retimer) into multi-lane data streams that are sent to the host. The first DSP also receives multi-lane data streams from the host and converts them (via the retimer) into electrical transit signals that are sent to the cable.

[redacted]

'233 Patent	Accused Amphenol Products
Claim 1	
	See, e.g.: **Overview** The Broadcom® BCM87850 is a single-chip, eight-lane, ultra-low power, ultra-low latency PHY that integrates retimer and equalizer to support active cable applications. The BCM87850 is capable of equalizing 22 dB of loss on both the client-side and line-side interfaces. Each lane is capable of multiple data rates, including 106.25 Gb/s. The on-chip clock synthesis is performed by a low-cost 312.5-MHz reference clock through high-frequency, low jitter phase-locked loops (PLLs). The BCM87850 is fabricated in low-power 7-nm CMOS technology and is available in a 12 mm × 12 mm, 0.5-mm pitch, 485-ball BGA, RoHS-compliant package. Ex. 50, *Broadcom BCM87850 Product Brief* (annotated). **Overview** The Marvell Alaska A MV-CHA180C0C 800G is a PAM4 DSP retimer for 800G Active Electrical Cable (AEC) application, optimized for Switch to Switch and Switch to Server connectivity inside next generation cloud data center, high-performance computing and AI systems. Alaska A 800G is a retimer device which utilizes a 112G Gbps PAM4 DSP SERDES. There are 8-host and 8-line ports with each receiver port being able to recover 112Gbps PAM-4 signals and transmit to partnered TX. It can provide up to 800G (8 x 112G) full duplex mission mode traffic.

'233 Patent	Accused Amphenol Products
Claim 1	
	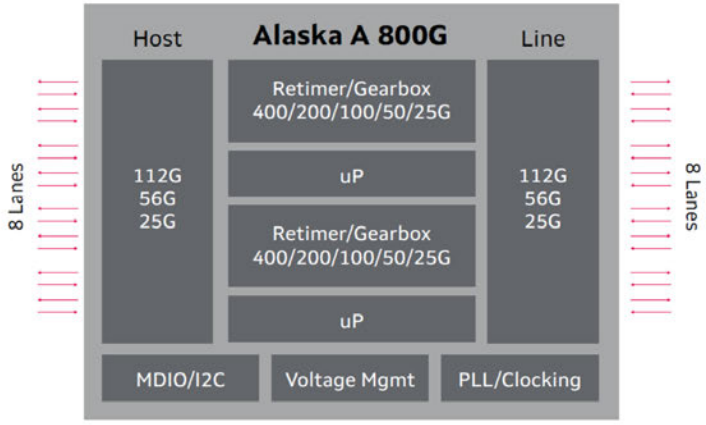 Ex. 51, *Marvell Alaska Product Brief* (annotated).

[redacted]

. . . .

[1f] the first and second DRR devices providing pre-equalization of the electrical transit signals using transmit filter coefficient values stored in nonvolatile memories.	The first and second DRR devices in the Accused Amphenol Products provide pre-equalization of the electrical transit signals using transmit filter coefficient values stored in nonvolatile memories. For example, the first and second DSPs provide different levels of pre-equalization corresponding to "short" and "long" modes used for 112G-per-lane chip-to-module (C2M) transmission, per the IEEE 802.3ck standard. On information and belief, the transmit filter coefficient values used for short-channel and long-channel pre-equalization are stored in

'233 Patent	**Accused Amphenol Products**
Claim 1	
	nonvolatile memories so they are available for C2M communications when the cable is connected to the host. See, e.g.: **120G.3.2.1 Module output modes** The module output shall support two modes: short and long. The means of controlling the module output mode is implementation dependent. For each output mode, the module shall meet the requirements for eye height (min) and VEC (max) in Table 120G–3 for both near-end and far-end measurements (see 120G.3.2.2.1). Ex. 52, *IEEE 802.3ck Specification* at 7275 (annotated). The datasheet for the exemplary Accused Amphenol Products notes that they support the IEEE 802.3ck standard: [1] **SPECIFICATIONS** • Refer to the latest revision specification of the OSFP octal small form factor pluggable module • Applicable IEEE specifications • EEE802.3by • IEEE802.3bj • IEEE802.3cd • IEEE802.3ck • The InfiniBand™ architecture specification and annexes Ex. 46, *Amphenol OSFP Copper Cable Assemblies Datasheet* (annotated).

[redacted]

'233 Patent	Accused Amphenol Products
Claim 1	
	SPECIFICATIONS ▪ Refer to the latest revision of the QSFP-DD hardware specification for QSFP double density 8X pluggable transceiver ▪ Applicable IEEE specifications ▪ IEEE802.3by ▪ IEEE802.3bj ▪ IEEE802.3cd ▪ IEEE802.3ck ▪ The InfiniBand™ architecture specification and annexes Ex. 79, *Amphenol QSFP DD Cable Assemblies Datasheet* (annotated). The datasheet also notes that a nonvolatile memory (an EEPROM) is integrated into the cable assembly: ▪ EEPROM in cable assembly Ex. 46, *Amphenol OSFP Copper Cable Assemblies Datasheet*. ▪ EEPROM in cable assembly Ex. 79, *Amphenol QSFP DD Cable Assemblies Datasheet*.

First Complaint, Ex. 34 at 1-24 (233 patent, Amphenol).

Credo thus cites a "DSP" or "retimer" as the claimed first or second "DRR device" for all three elements. DSP/retimers are similarly foundational in the claim charts for Molex and TE Connectivity, and for the domestic industry products. *See* First Complaint, Ex. 37 (233 patent, Molex); First Complaint, Ex. 40 (233 patent, TE Connectivity); First Complaint, Ex. 65 (233 patent, Credo). So there can be no doubt that the DSP/retimer included within an AEC is of great importance to showing infringement under the 233 patent. Marvell's in-house counsel described it aptly: "Marvell's retimer chips were being used to satisfy the inventive elements of the asserted patent claims." Mot., Kyriacou Decl. at ¶ 16.

The 252 and 111 patents similarly focus on the DRR device. The 252 patent describes an embodiment of its invention as a cable with first and second ends configured to couple to network interface ports, with "first and second transceivers being configured to perform clock and data recovery on the first and second electrical input signal to extract and re-modulate the first and second inbound data streams respectively as the first and second electrical transit signals conveying first and second transit data streams." 252 patent at 2:11-16. More specifically, it teaches an example where "the respective transceivers each employ fixed, cable-independent, equalization parameters for each of: the remodulation of the transit data stream as the outbound data stream, and the clock and data recovery performed on the electrical input signal." *Id.* at 2:24-28. Credo asserts claim 1 against the Respondents and it, much like the summary of the invention, recites generic conductors and connectors before a focus on DRR, that is, "data recovery . . . to . . . remodulate" a data stream, as programmed by stored equalization parameters:

> 1. An active Ethernet cable that comprises:
>
> electrical conductors connected between a first connector and a second connector,
>
> each of the first and second connectors being adapted to fit into an Ethernet port of a corresponding host device to receive from that host device an electrical input signal conveying an inbound data stream to the cable and to provide to that host device an electrical output signal conveying an outbound data stream from the cable,
>
> each of the first and second connectors including a respective transceiver that performs clock and data recovery on the electrical input signal to extract and re-modulate the inbound data stream for transit via the electrical conductors as a respective electrical transit signal conveying a transit data stream,
>
> the respective transceiver for each of the first and second connectors performing clock and data recovery on the respective electrical transit signal to extract and re-modulate the transit data stream as the outbound data stream from the cable, and

> the respective transceivers each employing fixed, cable-independent, equalization parameters for each of: the remodulation of the transit data stream as the outbound data stream, and the clock and data recovery performed on the electrical input signal.

Id. at cl. 1. Unsurprisingly, and consistent with the 233 patent, Credo's claim charts rely on the DSP/retimer in Respondents' AECs to show the DRR and equalization parameters limitations are met. First Complaint, Ex. 35 at 10-23 (252 patent, Amphenol); First Complaint, Ex. 38 at 6-18 (252 patent, Molex); First Complaint, Ex. 41 at 9-21 (252 patent, TE Connectivity); *see also* First Complaint, Ex. 66 at 4-13 (252 patent, Credo).

All of the above is additionally true for the 111 patent, which tightens its focus to the "transceiver" within the plugs of the AEC, and its programming and operation as a serializer-deserializer ("SerDes"). *See, e.g.*, 111 patent at 1:49-58, cls. 1, 8; Mot., Ex. 9 (Marvell asserting, "the claim of the '111 patent is directed at a SERDES in a transceiver, which specifically targets Marvell's DSP product, and the functionality therein" (emphasis removed)). Here, to show infringement of claim 1, Credo depends essentially entirely on the features and functionality of the DSP/retimer. *See* First Complaint, Ex. 36 (111 patent, Amphenol); First Complaint, Ex. 39 (111 patent, Molex); First Complaint, Ex. 42 (111 patent, TE Connectivity); *see also* First Complaint, Ex. 67 (111 patent, Credo).

That DSP/retimers are important components of AECs in industry is also borne out in the available technical literature. In a datasheet Credo attached to the First Complaint, the retimer is the first component listed to demonstrate performance of the AEC:

Credo's distinctive purple HiWire™ Active Electrical Cables (AECs) are plug and play copper interconnect cables designed for affordable, lossless operation at 100G, 200G, 400G, and 800G speeds. AECs come with built in retimer, gearbox, PCS and FEC terminations. AECs offer a high performance alternative to short, thick DACs and high power, high cost AOCs for data center and telecom applications.

CREDO
we connect.

[redacted]

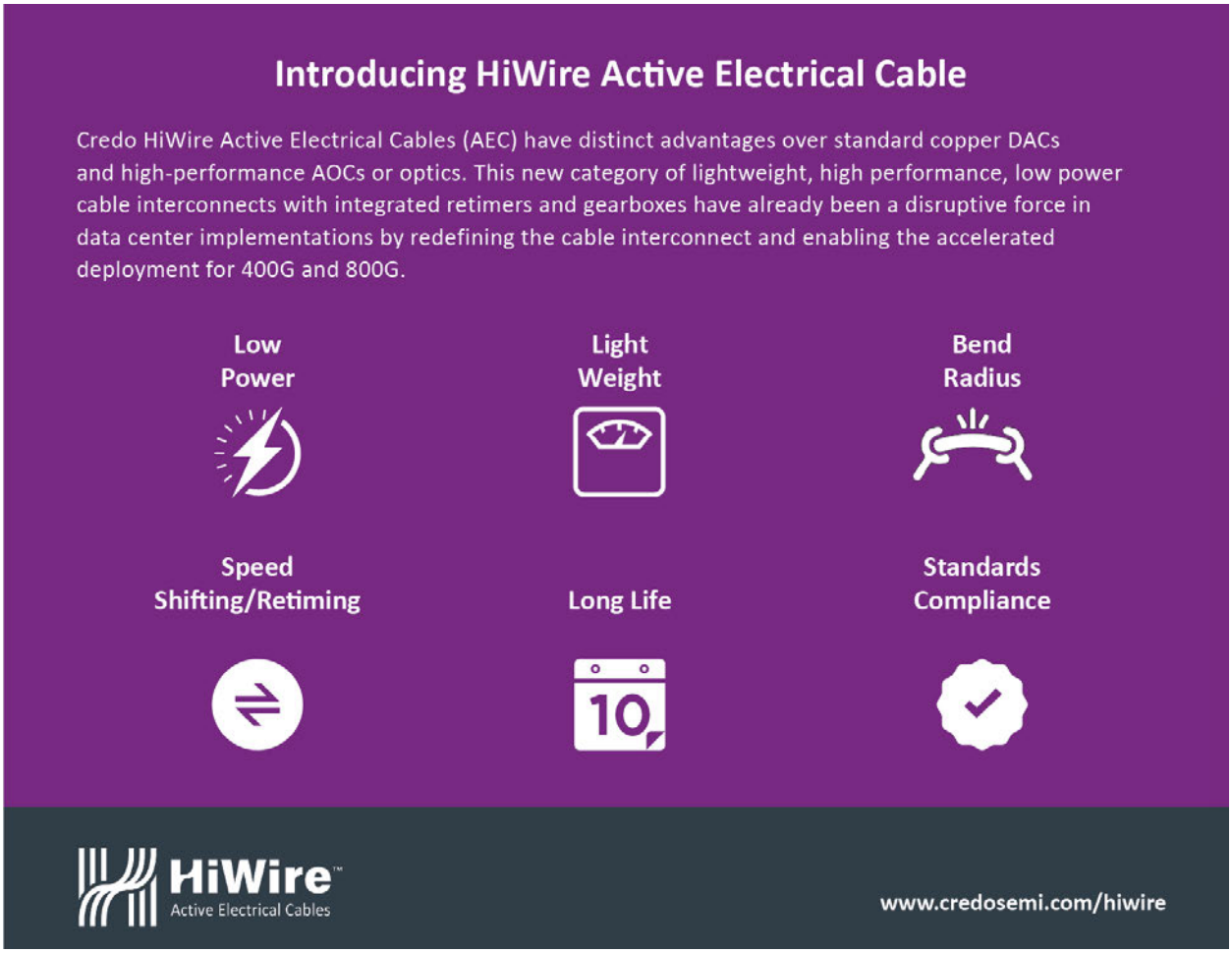

First Complaint, Ex. 8 at 1-2. A webpage from Molex brings explicit attention to the retimers within its AECs:

[redacted]

molex

English Register | Login

Active Electrical Cable Solutions

As data centers evolve to meet enterprise needs for higher data rates and signal integrity, versatility in cabling options is crucial to optimizing performance, cost and thermal management. Active Electrical Cable (AEC) Solutions with QSFP-DD and OSFP interconnects provide pluggable connectivity to efficiently extend the reach of copper cables, delivering design flexibility and superior, low-loss performance up to 112G PAM-4 without the added cost of optical cables.

Contact Us →

Data Rate	Wire AWG	Retimer
up to 800 Gbps	28 - 34	Multiple chip partner options available

Cost-effectively extends the reach of high-performance cables

AECs use retimers in the cable assemblies to reset loss and timing planes (i.e., they regenerate signals and remove noise), delivering superior signal integrity over longer distances than traditional passive DACs. By providing a low-loss, high-speed alternative to larger cable bundles, AECs eliminate the need for expensive active optical cables (AOCs), helping to control costs.

First Complaint, Ex. 13. A Molex datasheet for a particular AEC presents its DSP/retimer front and center to tout its benefits:

PRODUCT BRIEF

molex

Active Electrical Cable (AEC) QSFP-DD to QSFP-DD Straight Cable with Marvell Lynx800 Re-Timer

AECs use re-timers to efficiently extend the reach of Copper cables. They deliver superior performance and improved design flexibility while simultaneously reducing costs.

PRODUCT FEATURE HIGHLIGHTS

Molex AEC with Marvell Lynx800 Re-Timer

KEY ADVANTAGES

Achieve Next-Generation Digital Transmission Speeds
As digital transmission speeds continue to increase, from 56G PAM4 to 112G PAM4 to 224G PAM4, the reach of traditional, passive, direct-attach cables (DACs) decreases. AECs bridge the gap between retreating DACs and where active optical cables (AOCs) and optical modules begin.

Future-Proof Infrastructure with Active Components
Re-timers in the cable assemblies reset loss and timing planes, regenerating signals and removing noise, to deliver superior signal integrity over lengths up to 5+ meters. AECs reduce cable bundle size, bend space, bend radius and airflow impedance. They also have an extended loss budget of up to 40+ dB depending on the chip.

Opp'n, Ex. K at 1; *see* First Complaint, Ex. 56 (Molex datasheet with Broadcom DSP/retimer); First Complaint, Ex. 30 (TE Connectivity press release explaining demo product "is driven by Marvell's 224 Gbps DSP SerDes silicon). And while Credo argues that Marvell's DSP/retimers are useful in other applications, clearly the industry was told and understood in 2022 that specific ALASKA DSP/retimers are to be used in AECs and would so be used in Respondents' upcoming products:

[redacted]

Investor Relations | Marvell

Marvell Announces Availability Of Active Electrical Cables Powered By Its Industry-Leading PAM4 DSP Technology

Leading Cable Manufacturers Deliver Cloud-Optimized Interconnects to Address Soaring Data Center Bandwidth Demand

SANTA CLARA, Calif., Oct. 20, 2022 /PRNewswire/ -- Marvell Technology, Inc. (NASDAQ: MRVL), a leader in data infrastructure semiconductor solutions, today announced that leading cable manufacturers are sampling to cloud data center operators their 100G/lane active electrical cables (AECs) powered by Marvell® Alaska® A PAM4 DSPs. At these speeds, the physical reach achievable with passive direct attach cables (DACs) falls short of the distance requirements for server-to-ToR (top of rack) and switch-to-switch interconnects. For cloud operators to continue their routine data center bandwidth doubling, most of these interconnects must transition from DAC to AEC. The Alaska A PAM4 DSP family enables cable manufacturers to deliver optimized AEC solutions that meet the unique and diverse requirements of leading cloud data center operators. The emerging AEC interconnect product category expands Marvell's addressable market for high-speed DSP technology.

. . . .

"A data center is only as strong as its weakest link. We anticipate AEC adoption to occur rapidly with shipments of AEC chips growing by 10x to nearly 25 million units per year by 2026," said Alan Weckel, co-founder of the 650 Group. "AEC cables will play a pivotal role in server to Top-of-Rack switching in the data center as server speeds increase to 100 Gbps and beyond. AI/ML-based servers are already pushing the limits of current cable technology."

Availability

Active electrical cables powered by Marvell Alaska A PAM4 DSPs are sampling now from Amphenol, Molex and TE Connectivity.

First Complaint, Ex. 23; *see* First Complaint, Exs. 72 (Marvell press release, "Industry's 1st Cloud-Optimized 400G/800G PAM4 DSPs for Active Electrical Cables"); First Complaint, Ex. 51 (Marvell retimer datasheet for "Active Electrical Cable (AEC)"); First Complaint, Ex. 50 (Broadcom retimer data sheet "For Active Copper Cable Applications"). [redacted]

All of these filings and evidence, in addition to Credo's use of subpoenas to Marvell and the Notice of Institution specifically listing retimers as components to be investigated, demonstrate that DSP/retimers are not just one of many components of AECs (*see* Opp'n at 1; Opp'n, Cordell Decl. at ¶ 4 ("this case is no different from virtually every other ITC investigation in that the accused systems are a combination of parts, technologies, and software sourced from many companies"); Opp'n, Barnetson Decl. (listing components); C Reply at 3-4), but likely *the most important* component in this investigation.

Credo's efforts to downplay DSP/retimers' importance simply cannot stand in light of this record. And while Credo attempts to bring attention to other components such as (Opp'n at 19-20, 27-28), that assertion is not supported by the record. Indeed, does not appear in any of the First Complaint's claim charts (*See* First Complaint, Exs. 34-42) and either.

Credo's assertion that the particular programming that Respondents give the DSP/retimer is what matters (id. at 19-20 (asserting no infringement "if Respondents program the parts in a non-infringing manner"), 27 ("Respondents ultimately program the retimer) is also not persuasive. —would not seem to be implicated by any limitation of claim 1 of the Asserted Patents except perhaps in ways that are deemed standard essential. *See* 233 patent at cl. 1; 252 patent at cl. 1; 111 patent at cl. 1; First Complaint, Exs. 37, 38, 39. Further, neither the copper conducting cables nor the OSFP (or other standardized) pluggable ends of the cables could possibly be the points of novelty for these patents or focus of this investigation. *See* Opp'n at 21.

So while it is technically true that "neither Marvell's conduct nor its products are accused of infringement" because (Opp'n at 19), Marvell's DSP/retimer product is the keystone to infringement and, thus, to a violation of section 337. In a plain and ordinary sense, a violation over these AECs is an adverse outcome for Marvell,

and—given the marketing materials noted above—creates obvious exposure to future claims of indirect infringement. *See, e.g.*, ABA Model Rules at Rule 1.6, Comment [7] ("For example, if a lawyer is asked to represent the seller of a business in negotiations with a buyer represented by the lawyer, not in the same transaction but in another, unrelated matter, the lawyer could not undertake the representation without the informed consent of each client."); *Celgard*, 594 Fed. App'x at 672 ("Apple faces not only the possibility of finding a new battery supplier, but also additional targeting by Celgard in an attempt to use the injunction issue as leverage in negotiating a business relationship. Thus, in every relevant sense, Jones Day's representation of Celgard is adverse to Apple's interests.").

Moreover, F&R's dual representation of Credo and Marvell has created "a significant risk that the representation of one or more clients will be materially limited by the lawyer's responsibilities to another client," with that material limitation already manifesting in this investigation to the detriment of Credo. Comment [8] to Model Rule 1.7 speaks of "a significant risk that a lawyer's ability to consider, recommend or carry out an appropriate course of action for the client will be materially limited as a result of the lawyer's other responsibilities or interests." ABA Model Rules at Rule 1.7, Comment [8]. *See, e.g.*, Opp'n, Cordell Decl. at ¶ 3. And as noted above, this was not without negative effect. It removed one of two possible grounds to convince the Commission that DRR claim limitations were met in Respondents' products (Broadcom DSP/retimer or Marvell DSP/retimers). 19 C.F.R. § 210.10(a)(1) ("The Commission shall determine whether the

complaint is properly filed and whether an investigation should be instituted on the basis of the complaint."). So in no uncertain terms, the withdrawal weakened Credo's complaint and only happened because of F&R's relationship with Marvell. EDIS Doc. ID 857998 at 14:20-25 ; Opp'n, Adkisson Decl. at ¶ 2 . This begs the question of where else in the investigation F&R might be tempted to pull its punches—in either direction—going forward.

So a breach of Model Rule 1.7 has been shown without consideration of economic adversity, alleged or overblown. *See generally* Mot. at 1, 6, 18-20, 22, 25, 28, 32, 34, 36; Opp'n at 2, 15-18, 18 n.10, 33-34, 38; C Reply at 11-12. Credo argues *Graphics Processing* is analogous to the present circumstances (Opp'n at 17-18), but it is unavailing. There, the non-party movant, TSMC, was and is a well-known semiconductor manufacturer for customers who supply their own chip designs, such as NVIDIA, a respondent in that investigation. *Graphics Processing*, Inv. No. 337-TA-941, Order No. 7 at 5. The order found that "[t]he case here is about the end-product that NVIDIA designed, not the manufacturing process used to make those products" and "a result will not impose legal obligations or impair legal rights TSMC has." *Id.* Here, on the other hand, Marvell is both the designer and supplier of the DSP/retimer at issue. And, again, a determination that Marvell's DSP/retimers meet the key limitations of the asserted claims creates obvious exposure for Marvell to, for example, claims of indirect infringement and/or willful indirect infringement. The record is replete with examples of Marvell instructing its customers to use its

DSP/retimers for AECs. *See, e.g.*, First Complaint, Ex. 23 ("[L]eading cable manufacturers are sampling to cloud data center operators their 110G/lane active electrical cables (AECs) powered by Marvell® Alaska® A PAM4 DSPs."); First Complaint, Ex. 72 ("Marvell Expands Interconnect Porftfolio with Industry's 1st Cloud-Optimized 400G/800G PAM4 DSPs for Active Electrical Cables").

Credo also looks to *Certain Portable Communication Devices* ("*Portable Devices*"), Inv. No. 337-TA-827, Order No. 7 (Feb. 13, 2012). Opp'n at 17, 38. That case involved Google, represented by a law firm for patent prosecution matters only to have that law firm represent a complainant against implementers of the Android operating system on smartphones. *Portable Devices*, Inv. No. 337-TA-827, Order No. 7 at 1-3. Yet the judge found no direct adversity under Model Rule 1.7 after concluding the Android operating system was not a product of Google's. *Id.* at 12 (finding Android is actually an open-source product over which Google can incur no liability). Obviously, there is no assertion in this investigation that Alaska DSP/retimers used in Respondents' AECs are not the product of Marvell, so the case is readily distinguished on this important fact.

The remaining issue, then, is whether disqualification is warranted. The Federal Circuit instructs, "it is the total context, and not whether a party is named in a lawsuit, that controls whether the adversity is sufficient to warrant disqualification." *Celgard*, 594 Fed. Appx. at 672. The record clearly shows that F&R's representation of Credo is directly adverse to Marvell as it pursues showing Marvell's DSP/retimers meet the key limitations of the asserted claims, there is significant risk of F&R limiting its advocacy on behalf of one or the other, and there is credible

evidence that Marvell, as F&R's client, feels "betrayed" as under comment [6] to Model Rule 1.7. ABA Model Rules at Rule 1.7, Comment [6] ("The client as to whom the representation is directly adverse is likely to feel betrayed, and the resulting damage to the client-lawyer relationship is likely to impair the lawyer's ability to represent the client effectively."). Moreover, to the extent it need be shown that the investigation is "tainted" (*see* Opp'n at 32 (citing *DRAMs*, Inv. No. 337-TA-803, Order No. 40 at 6), 37; C Reply at 8), it already has been through F&R's weakening of Credo's complaint. Indeed, F&R's approach begs the question of what will happen at trial when Credo may need to cross-examine a Marvell witness or perhaps develop evidence towards their impeachment. ABA Model Rules at Rule 1.7, Comment [6] ("a directly adverse conflict may arise when a lawyer is required to cross-examine a client who appears as a witness in a lawsuit involving another client, as when the testimony will be damaging to the client who is represented in the lawsuit."). The declaration from Mr. Dowd of Dowd Scheffel *See* Opp'n, Dowd Decl. at ¶¶ 4-5; *see generally* Opp'n, Cordell Decl. at ¶ 10 ( ); Opp'n at 33 n.16.[3] And it would be hard to imagine how Dowd Scheffel could prosecute such a case without either intimate coordination with

[3] In a footnote, Credo hypothesizes that it would have grounds to allege a violation on the part of Marvell (causing F&R to voluntarily recuse) if Marvell "collude[s]" with Respondents already subject to an exclusion order to import chips and program them in a manner to infringe the asserted patents. Opp'n at 33 n.16. But surely conduct akin to this "collusion" has already taken place through Marvell's "sale for importation" activities, as evidenced by the datasheets and marketing materials already in the record and discussed above.

F&R, which would materially prejudice Marvell, or a lack of coordination that would materially prejudice Credo.

The Federal Circuit held disqualification was warranted in the similar scenario of *Celgard*, discussed above. 594 Fed. Appx. at 671-2. The court further observed in *Dr. Falk Pharma GmbH v. GeneriCo, LLC*, 916 F.3d 975, 986–87 (Fed. Cir. 2019) that, in a balancing of prejudices, disqualification is purely prospective relief which naturally limits the prejudice to the losing party because any work product already created may stand undisturbed. *See* 916 F.3d at 986 ("Mylan will not face any prejudice or undue hardship as a result of disqualification. Indeed, because movants seek only prospective relief, Mylan will not need to submit new briefs in [parallel cases]."). The same is true here. The work product F&R has so far created need not be duplicated, contrary to Credo's assertion (*see* Opp'n at 33). Further, the investigation is still in its relatively early stages (*see* Order No. 6), and to the extent a stay is required to avoid lapsing deadlines, it will be considered generously. Marvell and the Staff are also persuasive in arguing that F&R should have known of the potential conflict well before it filed the complaint, at least given the shared general counsel between Credo and Marvell (Mot. at 3, 35; S Resp. at 14) and publicly available marking materials; and certainly knew immediately after the complaint due to the direct communications with Marvell. So the prejudice to Credo in losing its preferred counsel at this point in the proceedings is at least somewhat self-inflicted. *Celgard*, 594 Fed. Appx. at 672.

Further, Credo argues the present motion may be an effort to "manufacture surprise and prejudice where there is none" and suggests it is a tactical device to disrupt discovery. *See* Opp'n at 36-37. From a discovery standpoint, it is true that Marvell and Respondents have not been as

responsive to Credo's requests as they should have been. *See* EDIS Doc. ID 857998 at 28:3-30:2; Order No. 2 at G.R. 3.7 ("No motion stops discovery except a timely motion to quash a subpoena."). Nevertheless, given Marvell and F&R's discussions following the filing of the First Complaint, F&R's withdrawal of complaint content, and then Marvell and F&R's discussions following the subpoena, it is reasonable to credit Marvell's explanation that Credo's continued efforts to discover Marvell information were a genuine surprise. Mot., Kyriacou Decl. at ¶¶ 19-21; Mot., Ex. 13 (June 9 letter from Molex to Marvell notifying its information was at issue pursuant to agreement); Opp'n, Cordell Decl. at ¶ 10; Mot., Ex. 17 (June 27 letter from Marvell to F&R requesting recusal before motions practice). The present motion was filed fairly timely thereafter. *See* S Resp. at 14; *see also* Order No. 10 (granting motion for leave to intervene filed on the last possible day). So there is no appreciable harassment here.

Finally, Credo argues in footnotes that if disqualification is warranted it "should be limited to only issues pertaining to Marvell." Opp'n at 39, n.22; C Reply at 4 n. 3 (referencing "proposed solution to bifurcate its infringement case"). But Credo offers no roadmap for how to implement a limited disqualification, F&R would, again, have to coordinate intimately with Dowd & Scheffel or any other conflict counsel, which would significantly undermine a limited disqualification, and other section 337 issues could bring about the same conflict of interest (*e.g.*, invalidity, remedy, and bonding issues). So any bifurcation plan is best left to an agreed-upon waiver between F&R, Credo, and Marvell, which I encourage the parties to attempt to reach.

The Commission has an overriding interest in maintaining the integrity of section 337 investigations, which is eroded when a party's trial attorneys have a conflict of interest, and

therefore an incentive to pull their punches. The evidence shows that is the case here, so disqualification is the just outcome.

C. Model Rule 1.9

The present record does not reflect a Model Rule 1.9 conflict. Marvell only refers to the CCO Litigation here, as opposed to F&R's trademark work, so it must show that the CCO Litigation and this investigation are "the same" or "substantially related" in such a way that risks F&R using Marvell confidential factual information previously learned against Marvell in this investigation. ABA Model Rules at Rule 1.9, Rule 1.9, Comment [3]. Marvell has not shown this because its assertions are too generalized.

For example, Marvell argues that the asserted patent in the CCO Litigation and Credo's asserted patents share similar technical principles and objectives (Mot. at 29 (citing 069 patent; 111 patent), 30 ("underlying technologies in these fields are highly similar")), and the product features implementing these techniques "are central to retimer devices such as those offered in the Marvell Alaska series accused in this Investigation" (*id.* at 29-30). Marvell lists "signal misalignment, inter-symbol interference (ISI), and channel attenuation," among others. Id. But generalized statements of technical principles and objectives that are "often used in the same technological environments" are ascertainable from the patents themselves and do not implicate Marvell confidential factual information. Additionally, stating that these techniques are "central" to Alaska DSP/retimers is not all that meaningful, as compared to stating that the techniques are "central" to Credo's theory of infringement. But Marvell does not state this.

Marvell then cites the declaration of its in-house counsel to argue "[d]uring the course of that [CCO Litigation] representation, Fish was given access to highly confidential technical information and conducted multiple interviews with engineering witnesses. . . . There is a legitimate concern that at least Mr. Livedalen could use this information, which cannot be unlearned, to Credo's advantage." Mot. at 30 (citing Mot., Kyriacou Decl. at ¶ 8). This, for what it is worth, is a direct assertion that confidential factual information was learned by F&R. But the actual declaration content is again too generalized, offering no specifics of that information so as to connect to the technical principles and objectives previously mentioned (*e.g.*, "signal misalignment, inter-symbol interference (ISI), and channel attenuation"):

> 8. While at Marvell in 2020, I worked directly with Mr. Brian Livedalen and other Fish attorneys on a patent litigation filed by Computer Circuits Operations LLC ("CCO"). Over the many years of Ruffin Cordell's representation of Marvell, I understand that he and his firm have had access to a trove of highly confidential Marvell information. Fish has been privy to Marvell's most sensitive technical information, [redacted], and it has conducted multiple interviews with engineering witnesses. Fish has also been privy to [redacted]

Mot., Kyriacou Decl. at ¶ 8. In other words, it has not been shown that the confidential information F&R learned has any connection to the technical overlap of the two matters. Staff's approach to the issue is weak for the same reason; it is too generalized and therefore speculative. *See* Staff Resp. at 11-13 (no mention of technology or products); *see id.* at 12-13 ("the subject matters . . . are close enough that they might potentially implicate claim construction, prior art/invalidity analysis, depositions of witnesses previously interviewed as friendly client employees, and Marvell's general patent litigation/settlement strategy."). Credo actually offers the best practical assessment of the matters, and is persuasive that the actual products at issue in the CCO Litigation

were "DDR3, DDR4, LPDDR3, and LPDDR4 memory controllers" which are very different than the "data transmission and recovery over extended Ethernet cables" involved in this investigation. *See* Opp'n at 29-30 (citing Opp'n, Barnetson Decl. at ¶ 6).

So Marvell has not sufficiently shown the CCO Litigation and this investigation are substantially related in a way that risks the cross use of confidential information by F&R. ABA Model Rules at Rule 1.9, Comment [3] ("In the case of an organizational client, general knowledge of the client's policies and practices ordinarily will not preclude a subsequent representation; on the other hand, knowledge of specific facts gained in a prior representation that are relevant to the matter in question ordinarily will preclude such a representation."). This portion of the motion is denied.

D. Lack of Motion to Intervene Does not Moot Marvell's Motion

Finally, Credo contends that Marvell's failure to intervene in this investigation prior to filing its motion to disqualify makes the motion to disqualify "fatally defective" under Commission Rule 210.19. Opp'n at 2 n.2. No other party addresses this issue.

Credo's point is well taken, as most of the parties' cited cases involve non-parties moving to intervene prior to or alongside their motions to disqualify. *See, e.g.*, *Celgard*, 594 Fed. Appx. at 671; *Portable Devices*, Inv. No. 337-TA-827, Order No. 7 at 1. But the Commission Rules do not clearly prohibit consideration of a motion to disqualify prior to intervention. For example, Commission Rule 210.3 defines "Intervenor" as "a person who has been granted leave by the Commission to intervene as a party to an investigation or a related proceeding under this part." 19 C.F.R. § 210.3. Marvell, in contrast, is not seeking to fully participate in the investigation as

a party and address all issues within the Notice of Institution. *See, e.g.*, *Dr. Falk Pharma GmbH v. GeneriCo, LLC*, 916 F.3d 975, 981-82 (Fed. Cir. 2019) (evaluating direct adversity even after non-party successful moves to intervene, indicating motion to intervene for the purposes of disqualification is not as a true party to the lawsuit). It merely seeks to protect its interests under the attorney-client relationship, which is of paramount importance to the integrity of our legal system. ABA Model Rules at Preamble, Comments [8], [10], [12], [13], [16]. Marvell's limited participation in the case is also clearly warranted, so insisting on a prior or simultaneous motion to intervene would have been a pointless formality. The present motion is therefore considered despite this possible procedural defect.

VI. CONCLUSION

Non-party Marvell's motion to disqualify Fish & Richardson P.C. as counsel for Credo (1446-004) is GRANTED.[4] The parties shall meet and confer regarding amendments to the schedule to accommodate Credo's new counsel.

Within seven days of the date of this document, the parties shall submit to the Office of the Administrative Law Judges a joint statement as to whether or not they seek to have any portion of this document deleted from the public version. If the parties do seek to have portions of this document deleted from the public version, they must submit to this office a copy of this document with red brackets indicating the portion or portions asserted to contain confidential business

---

[4] The Secretary's Office is directed to serve the confidential version of this order upon the movant, non-party Marvell.

[redacted]

information. The submission may be made by email and/or hard copy by the aforementioned date and need not be filed with the Commission Secretary.

SO ORDERED.

Cameron Elliot
Administrative Law Judge

Marvell Semiconductor, Inc. - Ex. 1033, Page 000054