US007051110B2

(12) **United States Patent**
Hagai et al.

(10) **Patent No.: US 7,051,110 B2**
(45) **Date of Patent: May 23, 2006**

(54) **DATA RECEPTION/PLAYBACK METHOD AND APPARATUS AND DATA TRANSMISSION METHOD AND APPARATUS FOR PROVIDING PLAYBACK CONTROL FUNCTIONS**

(75) Inventors: **Makoto Hagai**, Kanagawa (JP); **Yoshinori Matsui**, Nara (JP)

(73) Assignee: **Matsushita Electric Industrial Co., Ltd.**, Osaka (JP)

(*) Notice: Subject to any disclaimer, the term of this patent is extended or adjusted under 35 U.S.C. 154(b) by 1217 days.

(21) Appl. No.: **09/739,648**

(22) Filed: **Dec. 20, 2000**

(65) **Prior Publication Data**

US 2001/0013128 A1 Aug. 9, 2001

(30) **Foreign Application Priority Data**

Dec. 20, 1999 (JP) 11-360245

(51) **Int. Cl.**
G06F 15/16 (2006.01)

(52) **U.S. Cl.** **709/231**; 709/203; 725/135

(58) **Field of Classification Search** 709/203, 709/217–219, 231; 725/133, 135; 379/88.13
See application file for complete search history.

(56) **References Cited**

U.S. PATENT DOCUMENTS

5,442,389 A * 8/1995 Blahut et al. 725/92
5,583,561 A * 12/1996 Baker et al. 725/93
5,613,032 A * 3/1997 Cruz et al. 386/69
5,659,539 A * 8/1997 Porter et al. 709/231
5,828,370 A * 10/1998 Moeller et al. 715/720
6,028,539 A * 2/2000 Matsui 341/55
6,262,723 B1 * 7/2001 Matsuzawa et al. 715/723
6,353,930 B1 * 3/2002 Shimoji et al. 725/110
6,418,140 B1 * 7/2002 Matsui 370/378
6,449,352 B1 * 9/2002 Takahashi et al. 379/142.16
6,452,609 B1 * 9/2002 Katinsky et al. 715/716
6,452,875 B1 * 9/2002 Lee et al. 369/30.04
6,463,444 B1 * 10/2002 Jain et al. 707/104.1
6,473,828 B1 * 10/2002 Matsui 711/104
6,535,530 B1 * 3/2003 Matsui 370/536
6,535,920 B1 * 3/2003 Parry et al. 709/231
6,538,665 B1 * 3/2003 Crow et al. 715/723
6,580,756 B1 * 6/2003 Matsui et al. 375/240.08

(Continued)

OTHER PUBLICATIONS

R. Fielding et al., Hypertext Transfer Protocol -HTTP/1.1, Jun. 1999.

Primary Examiner—Beatriz Prieto
(74) *Attorney, Agent, or Firm*—Wenderoth, Lind & Ponack, L.L.P.

(57) **ABSTRACT**

A data reception/playback apparatus includes sending means for sending a transmission request to a transmission apparatus, reception means for receiving stream data transmitted from the transmission apparatus in response to the transmission request, selection means for selecting a playback start position from a playback start position table where at least one playback start position is stored, and playback means for playing the stream data. The sending means requests the transmission apparatus to transmit the table, the reception means receives the table, the selection means selects a playback start position from the table, the sending means requests the transmission apparatus to transmit the stream data from the playback start position, the reception means receives the stream data, and the playback means plays the received stream data. Therefore, even when the data reception/playback apparatus receives the stream data from some midpoint in the stream, the apparatus can correctly play the stream data.

11 Claims, 18 Drawing Sheets

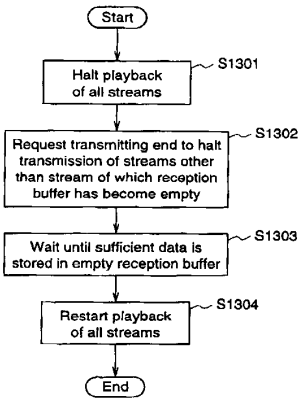

U.S. PATENT DOCUMENTS

6,587,985 B1 * 7/2003 Fukushima et al. 714/748
6,684,354 B1 * 1/2004 Fukushima et al. 714/718
6,721,490 B1 * 4/2004 Yao et al. 386/69
6,732,313 B1 * 5/2004 Fukushima et al. 714/748
6,891,799 B1 * 5/2005 Hagai et al. 370/235

* cited by examiner

Fig.1

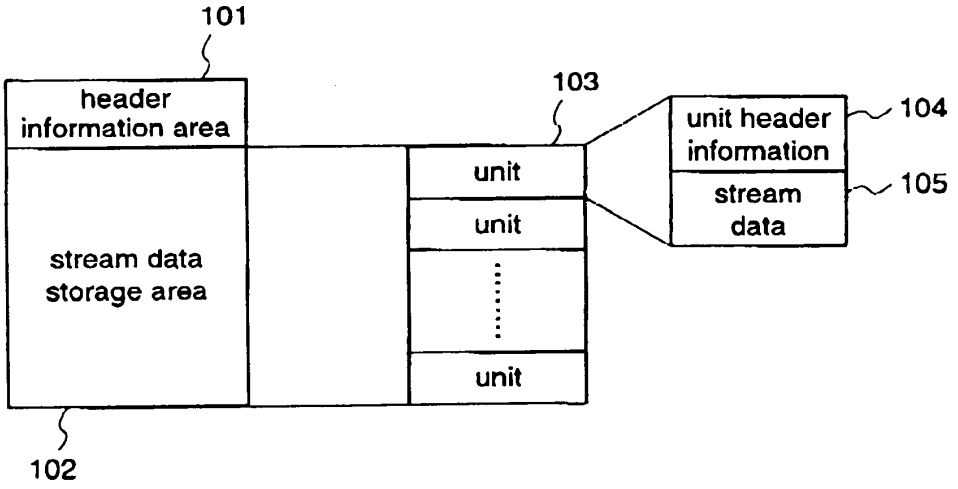
101
header information area
stream data storage area
102
103
unit
unit
unit
unit header information
stream data
104
105

Fig.2

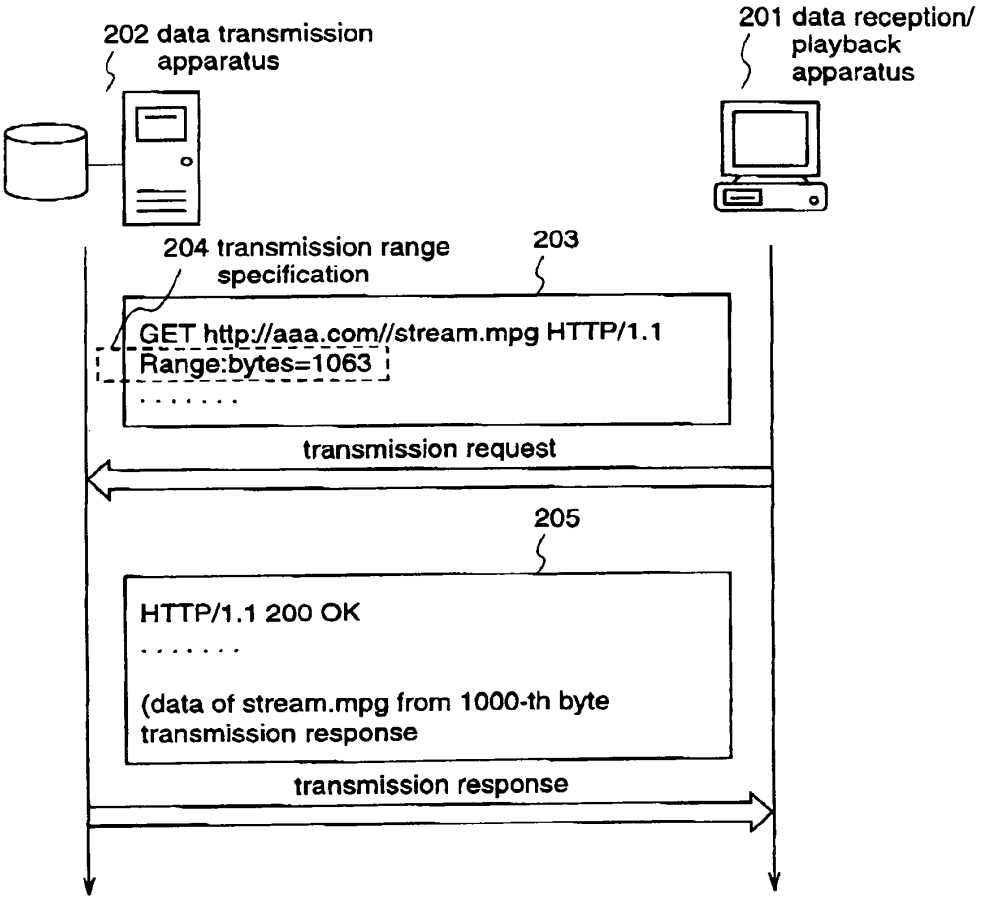
202 data transmission apparatus
201 data reception/ playback apparatus
204 transmission range specification
203
GET http://aaa.com//stream.mpg HTTP/1.1
Range:bytes=1063
. . . . . .
transmission request
205
HTTP/1.1 200 OK
. . . . . .
(data of stream.mpg from 1000-th byte
transmission response
transmission response

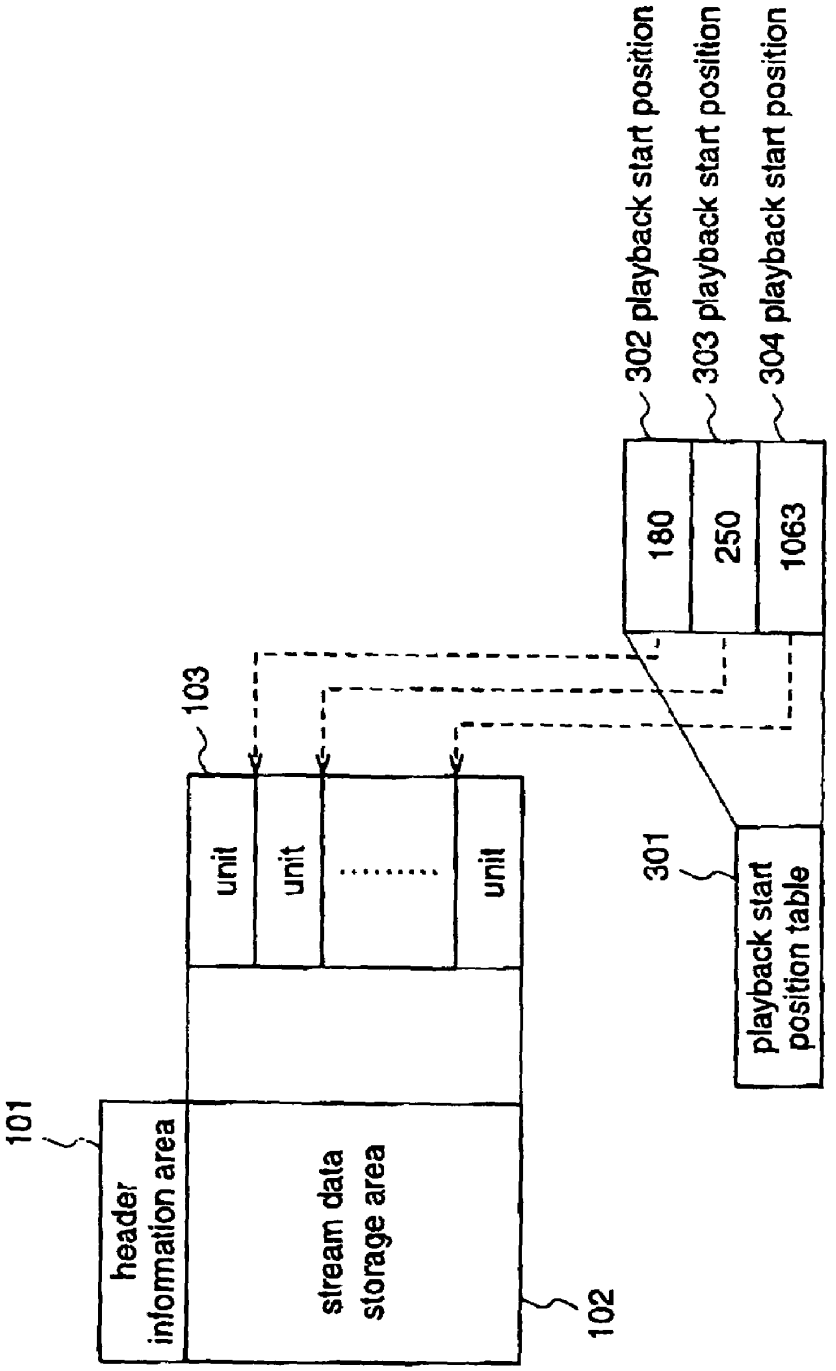
101
header information area
stream data storage area
102
103
unit
unit
unit
301
playback start position table
302 playback start position
303 playback start position
304 playback start position
180
250
1063

Fig.3

Fig.4

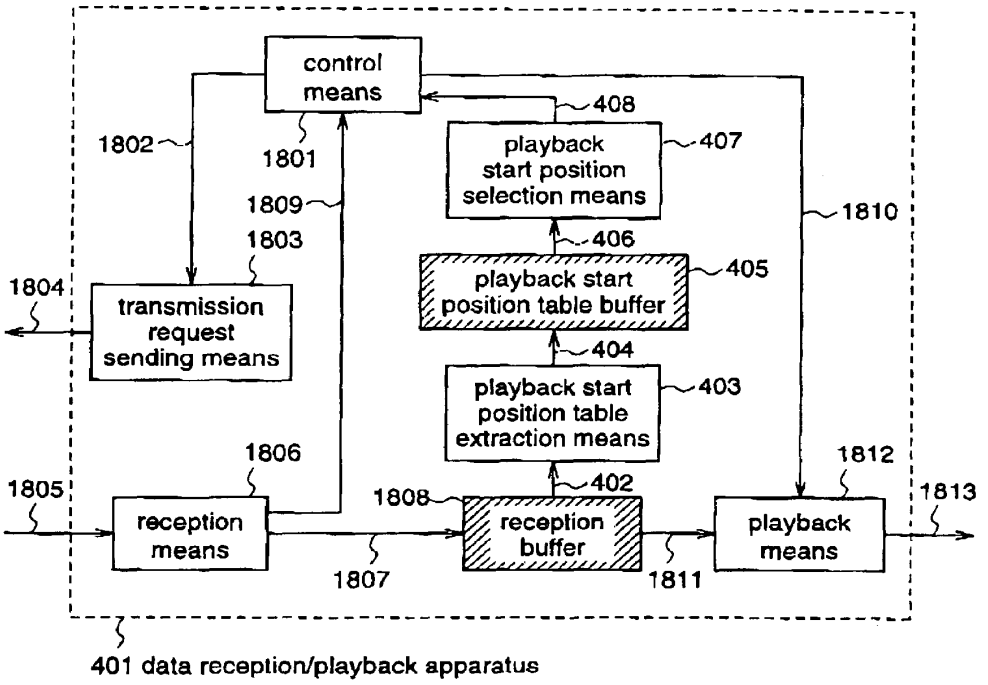
control means
1801
1802
1803
1804
transmission request sending means
1805
1806
reception means
1807
1808
reception buffer
1809
1810
1811
1812
1813
playback start position selection means
407
408
playback start position table buffer
405
406
playback start position table extraction means
403
404
402
playback means
401 data reception/playback apparatus

Fig.5 (a)

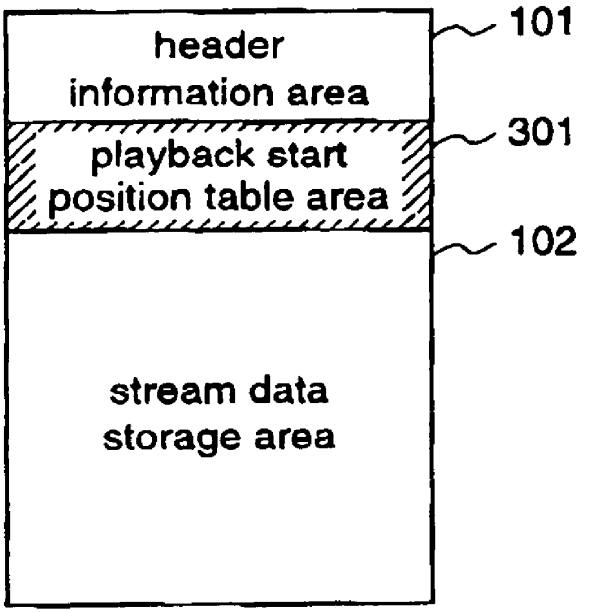
header
information area
101
playback start
position table area
301
102
stream data
storage area

Fig.5 (b)

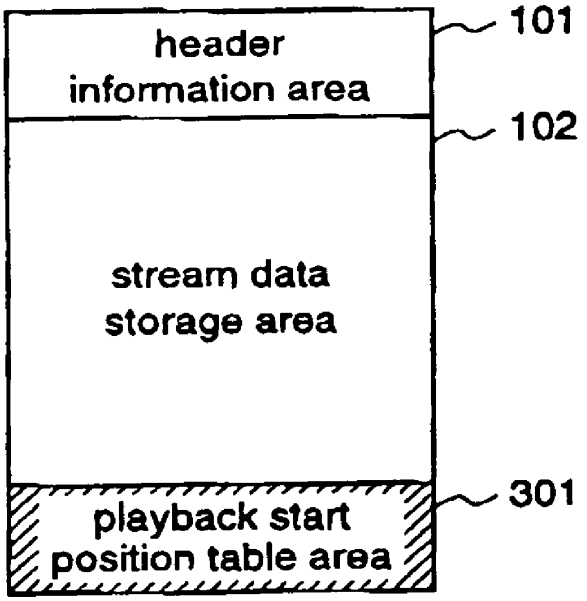
header
information area
101
102
stream data
storage area
playback start
position table area
301

Fig.6

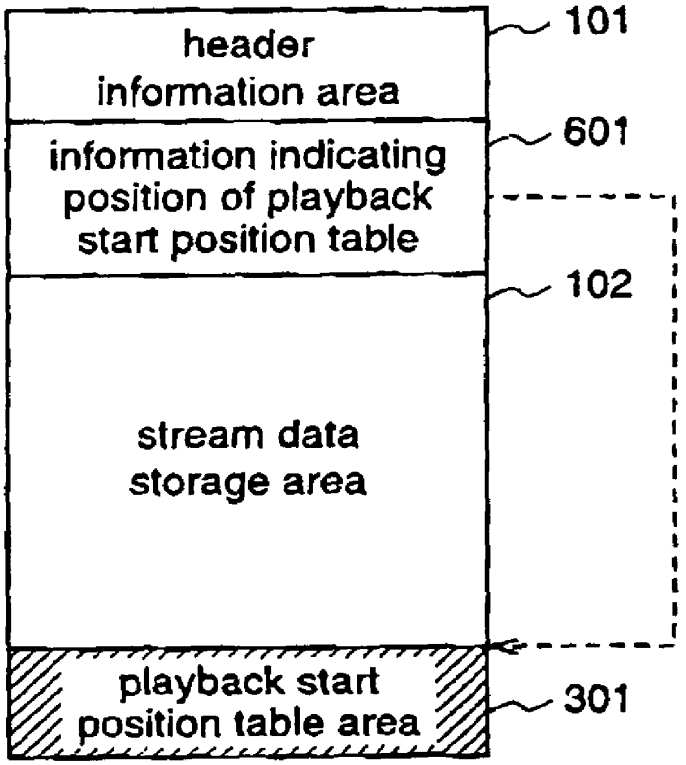
header
information area
101
information indicating
position of playback
start position table
601
102
stream data
storage area
playback start
position table area
301

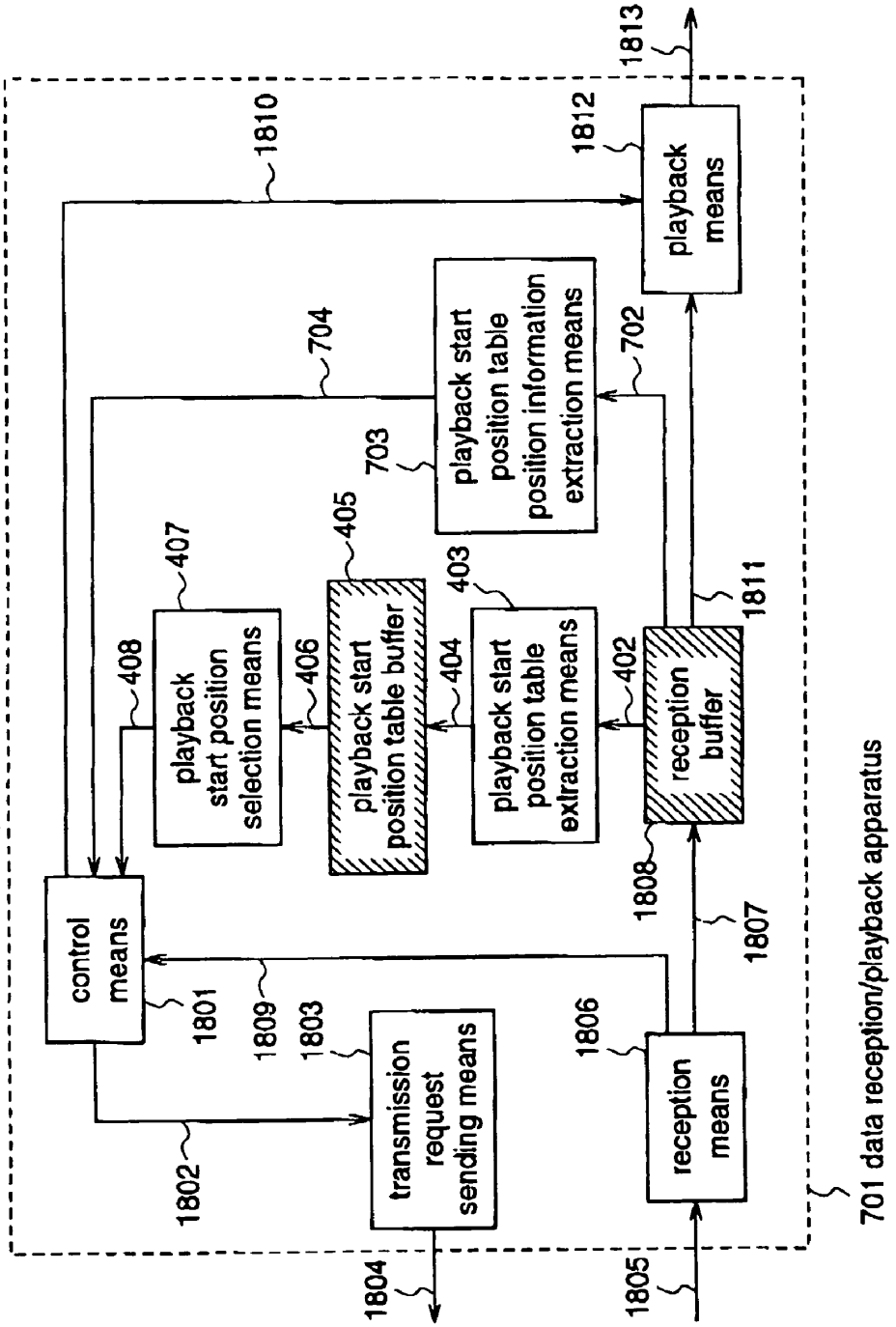
control means
1801
1802
transmission request sending means
1803
1804
1805
reception means
1806
1807
1808
reception buffer
1811
402
403
playback start position table extraction means
404
405
playback start position table buffer
406
407
playback start position selection means
408
1809
1810
704
702
703
playback start position table position information extraction means
1812
playback means
1813
701 data reception/playback apparatus

Fig.7

Fig.8

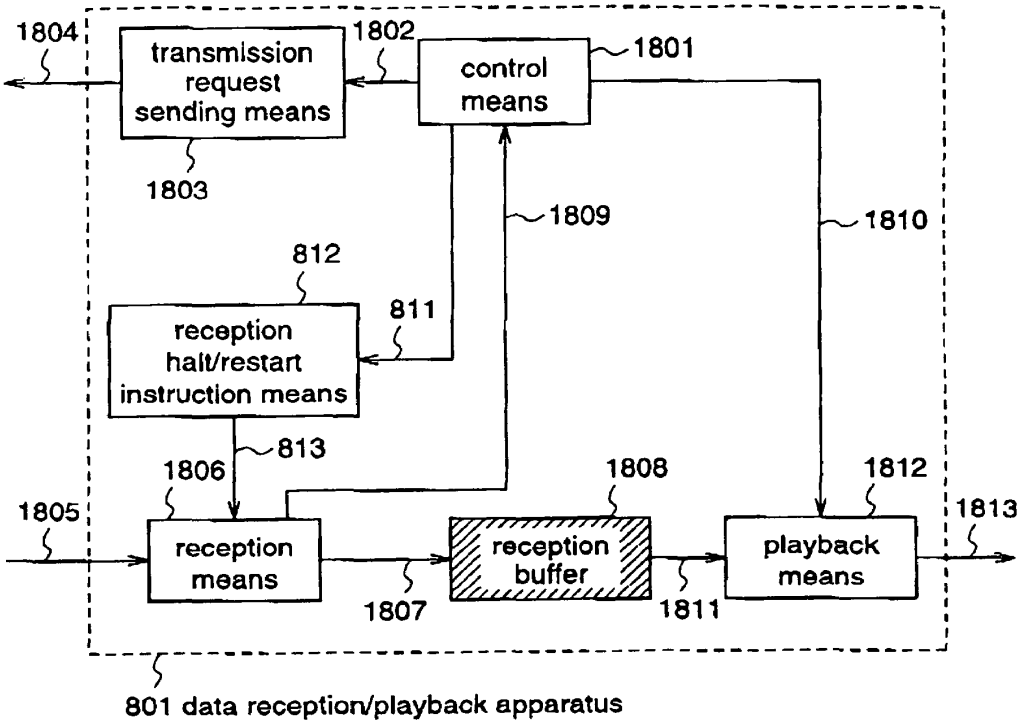
1804
transmission request sending means
1802
control means
1801
1803
1809
1810
812
811
reception halt/restart instruction means
813
1806
1808
1812
1805
reception means
reception buffer
playback means
1813
1807
1811
801 data reception/playback apparatus

Fig.9

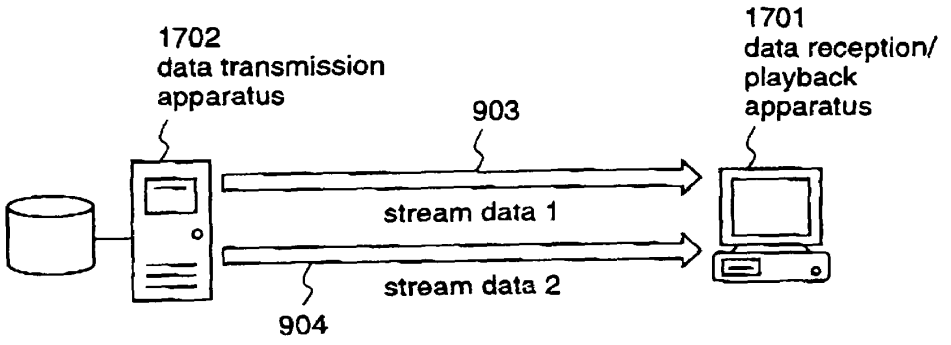
1702
data transmission
apparatus
903
1701
data reception/
playback
apparatus
stream data 1
stream data 2
904

Fig.10

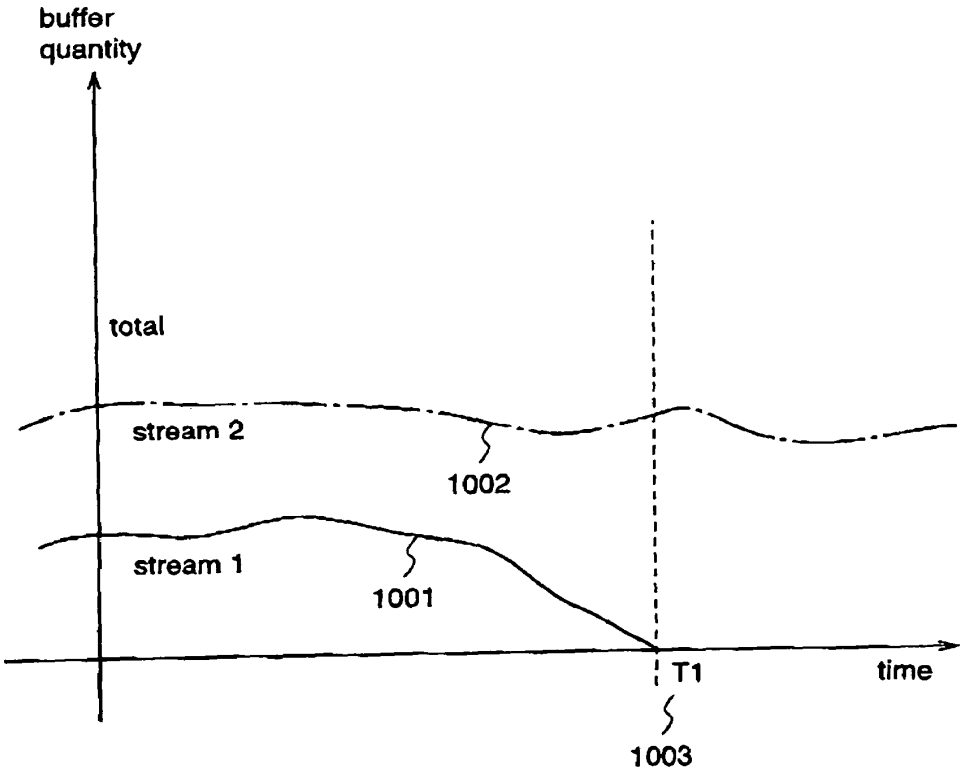
buffer
quantity
total
stream 2
1002
stream 1
1001
T1
time
1003

Fig.11

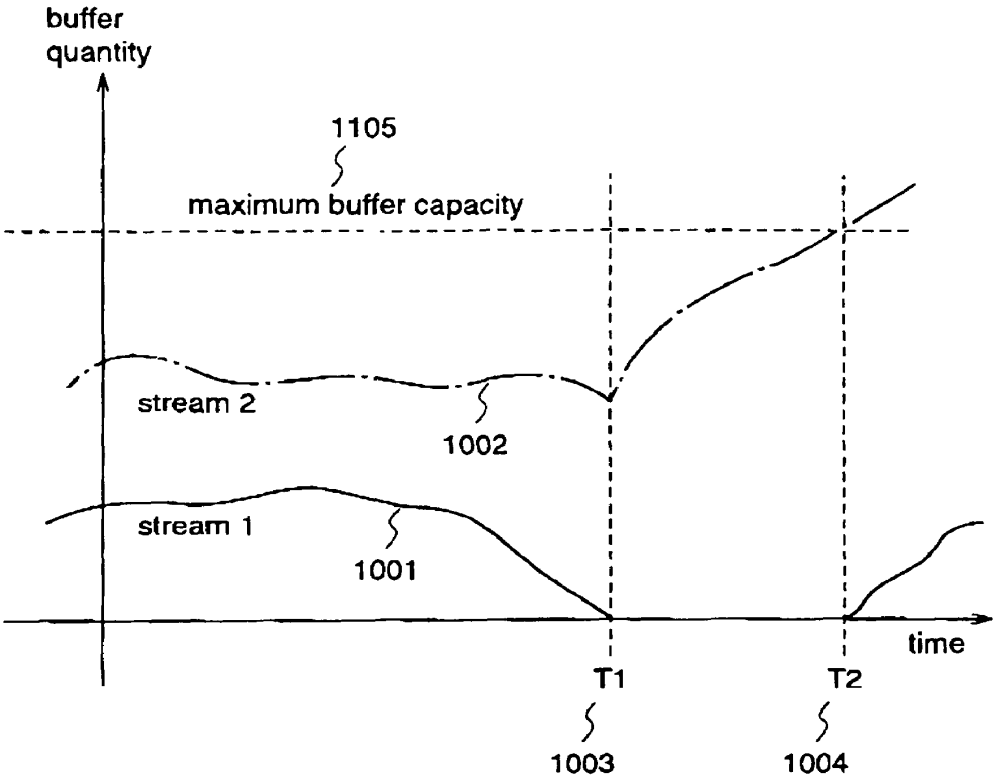
buffer
quantity
1105
maximum buffer capacity
stream 2
1002
stream 1
1001
time
T1
T2
1003
1004

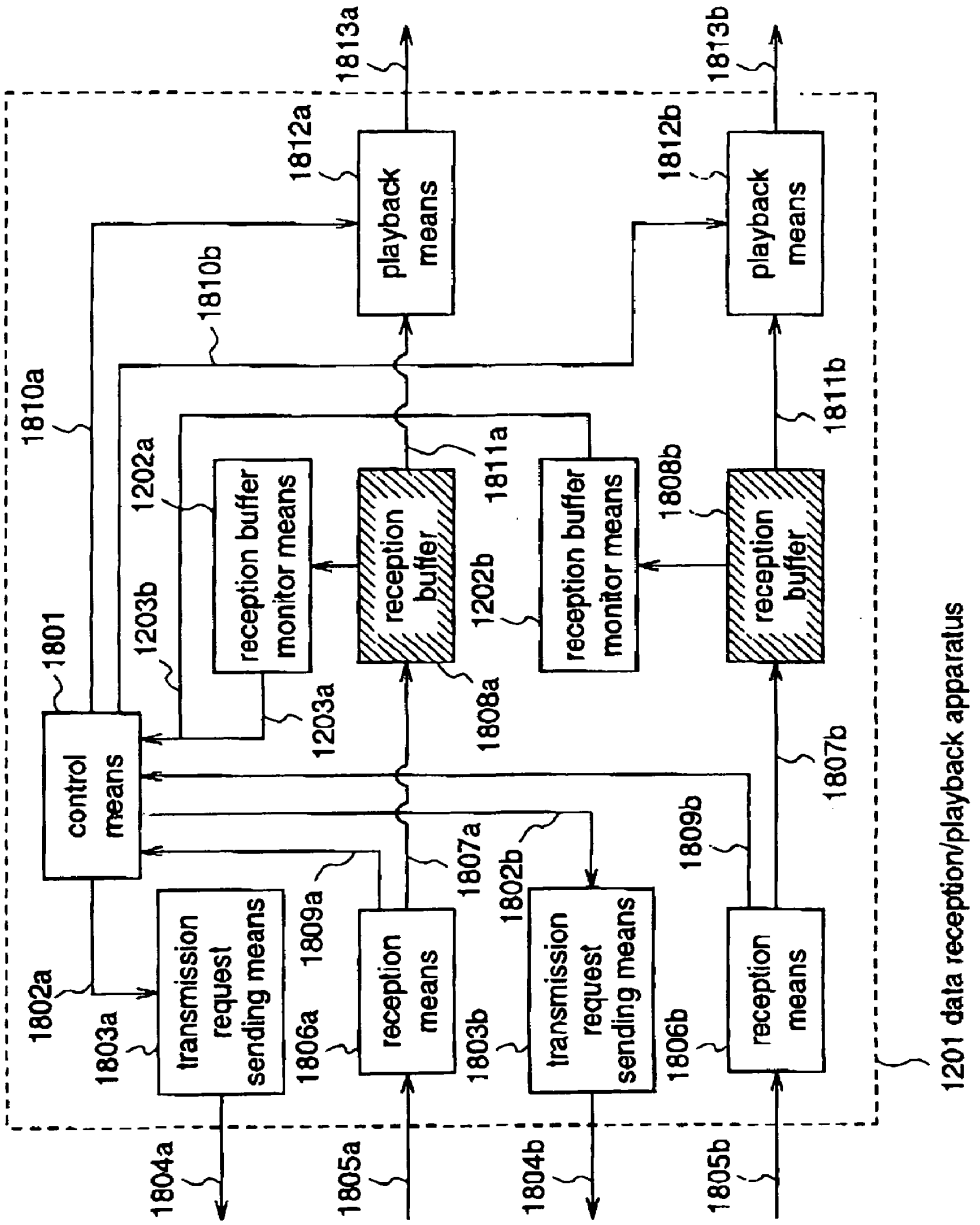
1813a
1813b
1812a
1812b
playback means
playback means
1810b
1810a
1811b
1202a
1811a
1808b
reception buffer monitor means
reception buffer
reception buffer monitor means
reception buffer
1801
1203b
1202b
1203a
1808a
control means
1807b
1807a
1809b
1802b
1809a
1802a
transmission request sending means
reception means
transmission request sending means
reception means
1803a
1806a
1803b
1806b
1201 data reception/playback apparatus
1804a
1805a
1804b
1805b

Fig.12

Fig.13

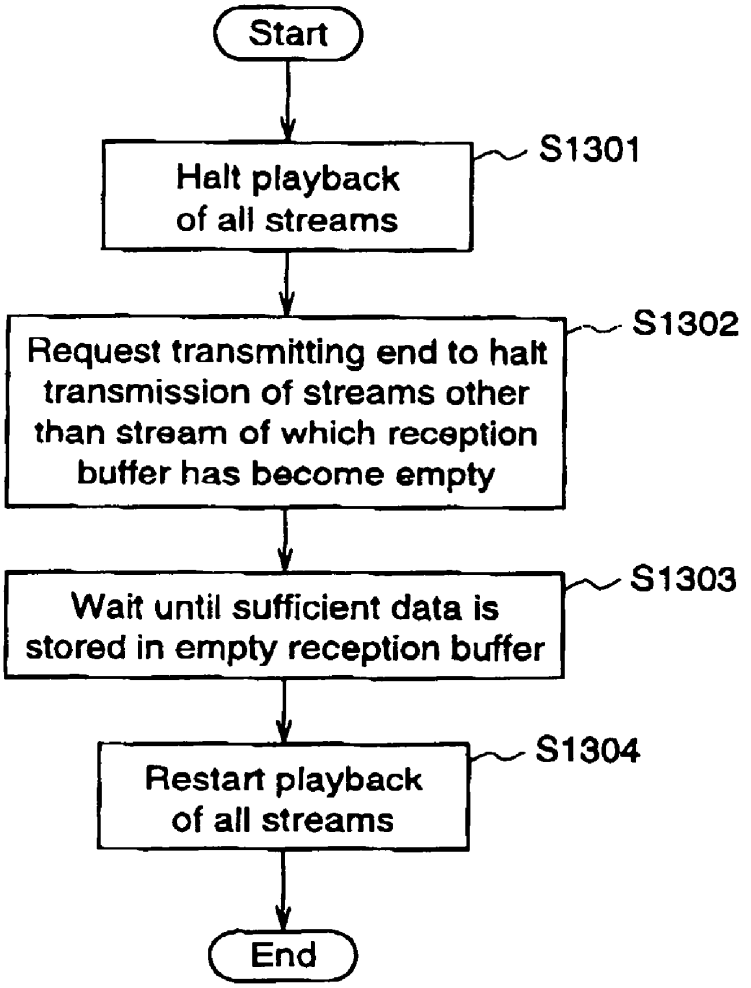
Start
Halt playback of all streams
S1301
Request transmitting end to halt transmission of streams other than stream of which reception buffer has become empty
S1302
Wait until sufficient data is stored in empty reception buffer
S1303
Restart playback of all streams
S1304
End

Fig.14

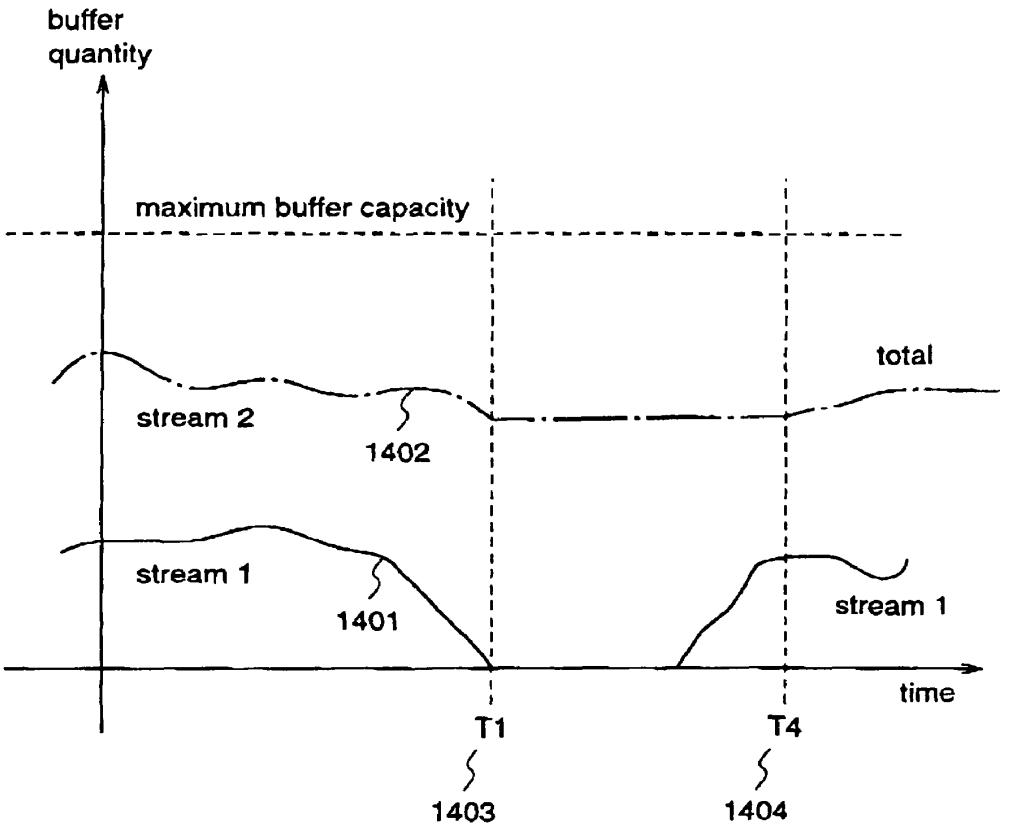
buffer
quantity
maximum buffer capacity
total
stream 2
1402
stream 1
1401
stream 1
time
T1
T4
1403
1404

Fig.15

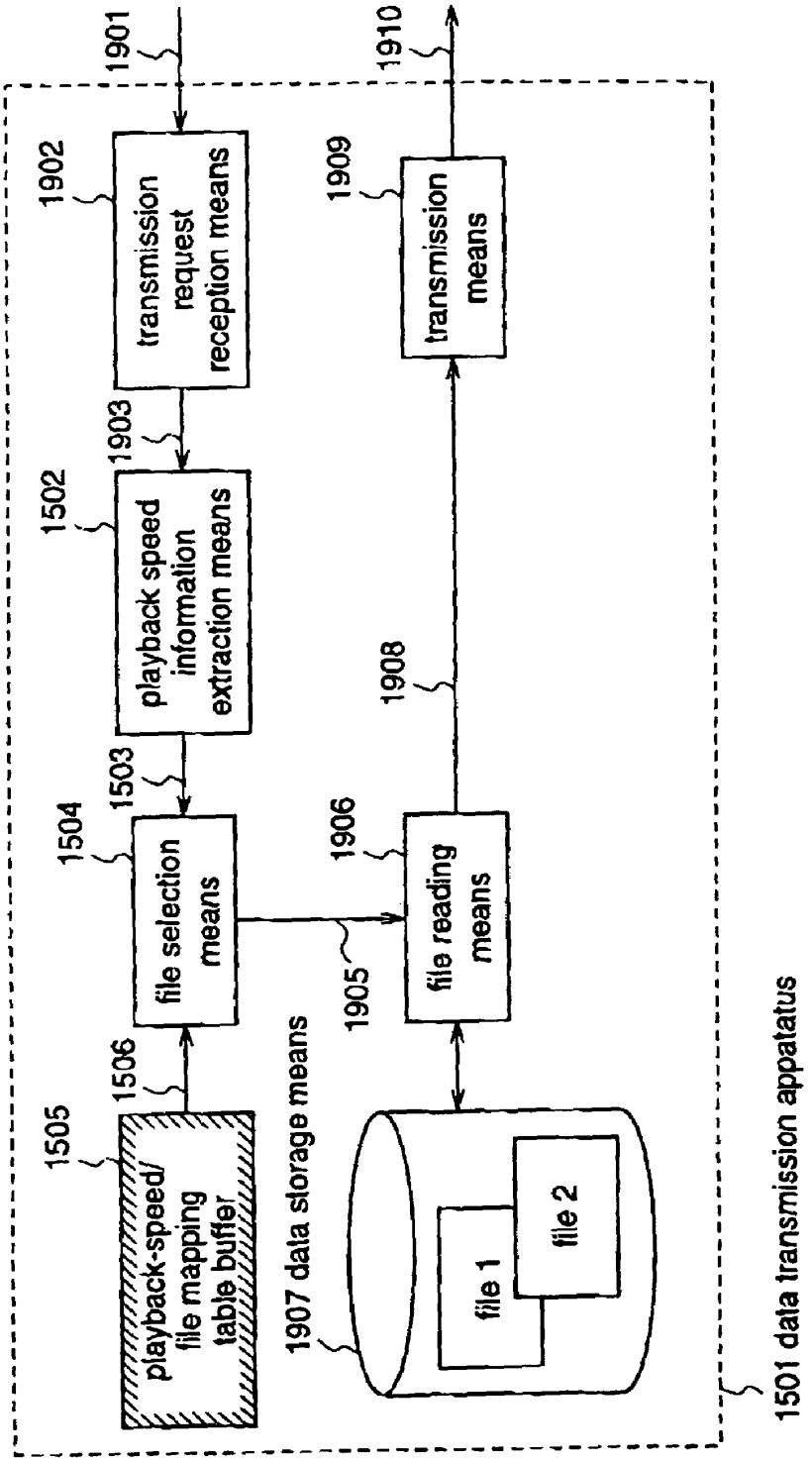
1901
1902
transmission request reception means
1903
1502
playback speed information extraction means
1503
1504
file selection means
1505
1506
playback-speed/ file mapping table buffer
1905
1906
file reading means
1907 data storage means
file 1
file 2
1908
1909
transmission means
1910
1501 data transmission appatatus

Fig.16

1601 playback speed	1602 file name
1.0	stream.mpg
2.0	stream_s2.mpg
3.0	stream_s3.mpg

Fig.17

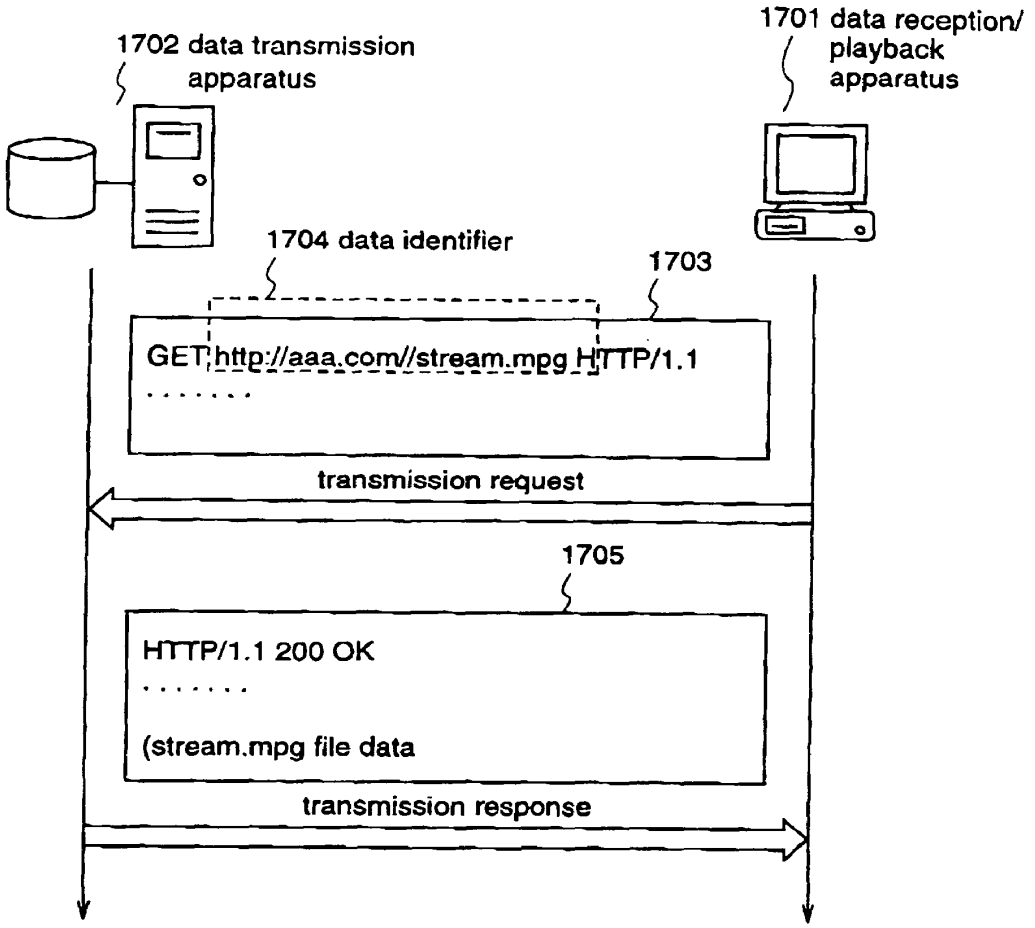
1702 data transmission apparatus
1701 data reception/ playback apparatus
1704 data identifier
1703
GET http://aaa.com//stream.mpg HTTP/1.1
. . . . . .
transmission request
1705
HTTP/1.1 200 OK
. . . . . .
(stream.mpg file data
transmission response

Fig.18 Prior Art

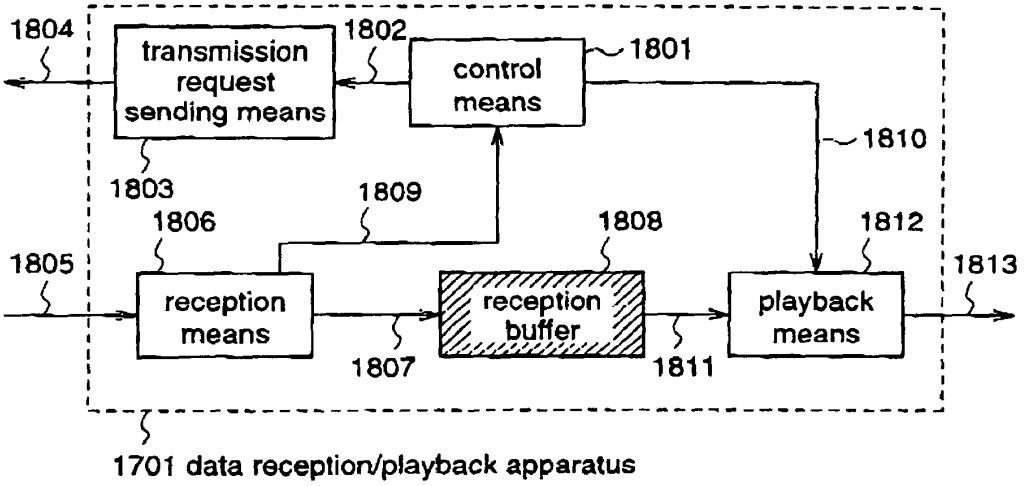

Fig.19 Prior Art

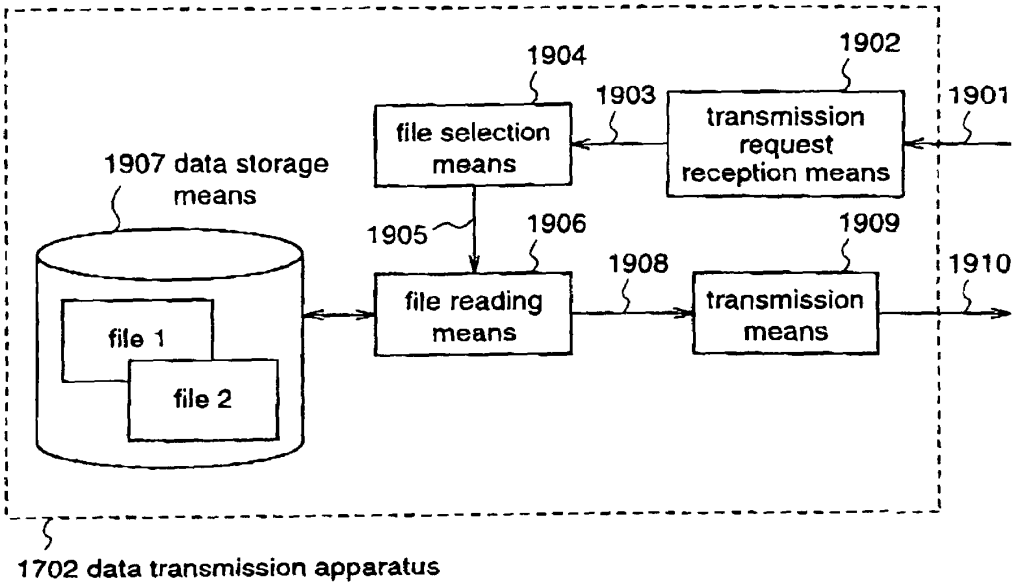

DATA RECEPTION/PLAYBACK METHOD AND APPARATUS AND DATA TRANSMISSION METHOD AND APPARATUS FOR PROVIDING PLAYBACK CONTROL FUNCTIONS

FIELD OF THE INVENTION

The present invention relates to methods and apparatuses for transmitting, receiving, and playing audio data or video data (moving pictures, still pictures, graphics, etc.) through a network.

BACKGROUND OF THE INVENTION

In recent years, the Internet has attracted attention as a means for exchanging information. As devices which are connectable to the Internet, such as personal computers, mobile terminals, handy phones and the like, are increasing, the Internet has come into general use. The WWW (World Wide Web) is the most popular system for providing information through the Internet, and the WWW employs the HTTP (Hyper Text Transfer Protocol) as a data transmission protocol.

FIG. **17** is a diagram illustrating the flow of messages between a data transmission apparatus (HTTP server) **1702** and a data reception/playback apparatus (HTTP client) **1701** using the HTTP.

Initially, the data reception/playback apparatus **1701** conducts an HTTP connection to the transmission apparatus **1702**, and transmits a request for data transmission **1703**. The transmission request **1703** is given an identifier corresponding to data (hereinafter referred to as data identifier **1704**), which is called a URI (Universal Resource Identifier), whereby the data reception/playback apparatus **1701** can request the transmission apparatus **1702** to transmit desired data. The transmission apparatus **1702** analyzes the transmission request **1703**, stores the data corresponding to the data identifier **1704** in a transmission response **1705**, and transmits the data of the transmission response **1705** to the data reception/playback apparatus **1701**. The data reception/playback apparatus **1701** then receives the transmission response **1705**. Through the above-mentioned procedure, the data reception/playback apparatus **1701** can take (obtain) desired data from the transmission apparatus **1702**.

Conventionally, data of texts, still pictures and the like have mainly been transmitted through the Internet. However, with the enlargement of network bands and the advance or audio/video compression technology in recent years, the Internet can be employed for information provision services using audio and video.

Hereinafter, with reference to FIGS. **18** and **19** a description will be given of the construction of a data reception/playback apparatus for receiving and playing stream data of audio and video, and the construction of a data transmission apparatus for transmitting stream data of audio and video to the data reception/playback apparatus.

FIG. **18** is a block diagram illustrating the construction of the data reception/playback apparatus **1701**. The data reception/playback apparatus **1701** comprises: a transmission request sending means **1803** for sending a transmission request **1804**; a reception (receiving) means **1806** for receiving, from the transmission apparatus **1702**, a transmission response **1805** to the transmission request **1804**; a reception buffer **1808** for storing the data that is received by the reception means **1806**; a playback means **1812** for playing the stream data that is stored in the reception buffer **1808**; and a control means **1801** for controlling the respective means mentioned above.

The data reception/playback apparatus **1701** so constructed operates as follows.

The control means **1801** instructs the transmission request sending means **1803** to send a transmission request (instruction signal **1802**). The transmission request sending means **1803** sends a transmission request **1804** to the transmission apparatus **1702** according to the instruction **1802** of the control means **1801**. Upon receipt of the transmission request **1804**, the transmission apparatus **1702** sends a transmission response **1805** to the receiving/playback apparatus **1701**. As the result, the receiving means **1806** receives the transmission response **1805**.

The receiving means **1806** stores data **1807** of the transmission response **1805** in the reception buffer **1808**. At this time, the receiving means **1806** sends a notice of reception **1809** to the control means **1801**. Upon receipt of the notice of reception **1809**, the control means **1801** instructs the playback means **1812** to play the data **1811** that is stored in the reception buffer **1808** (instruction signal **1810**). The playback means **1812** plays the data **1811** that is read from the reception buffer **1808**, and outputs the played data as an output signal **1813**.

Next, a description will be given of the transmission apparatus **1702**. FIG. **19** is a block diagram illustrating the construction of the transmission apparatus **1702**. The transmission apparatus **1702** comprises: a transmission request reception means **1902** for receiving and analyzing a transmission request **1901** from the reception/playback apparatus **1701**; a file selection means **1904** for selecting, from a data storage means **1907**, a file corresponding to a data identifier (URI) **1903** which is included in the transmission request **1901** (in this description, a file is defined as stream data which is recorded in a specific format); a file reading means **1906** for reading data from the file according to an instruction **1905** of the file selection means **1904**; and a transmission means **1909** for transmitting the data that is read by the file reading means **1906**.

The transmission apparatus **1702** so constructed operates as follows. The transmission request reception means **1902** receives and analyzes the transmission request **1901**. Then, the transmission request reception means **1902** extracts the data identifier **1903** from the transmission request **1901**, and informs the file selection means **1904** of the data identifier **1903**. The file selection means **1904** selects a file corresponding to the data identifier **1903** from the data storage means **1907**, and informs the file reading means **1906** of the selected file **1905**. The file reading means **1906** reads data of the selected file **1905** from the data storage means **1907**. The transmission means **1909** transmits the data **1908** that is read by the file reading means **1906** as a transmission response **1910**.

As described above, the reception/playback apparatus **1701** plays the audio or video that is transmitted from the transmission apparatus **1702** through the network.

Further, FIG. **9** shows the case where plural stream data are simultaneously received and synchronously played by using the data reception/playback apparatus **1701** and the data transmission apparatus **1702**. As shown in FIG. **9**, the data reception/playback apparatus **1701** outputs a transmission request for plural stream data to the transmission apparatus **1702** by using plural HTTP connections, and receives the plural stream data simultaneously to play them synchronously.

However, since the HTTP is not a protocol which is designed for audio/video transmission, HTTP cannot provide playback control functions which are useful in audio/video playback, such as a playback from some midpoint in stream data, a suspension of playback, a change of playback speed, and the like.

Further, when a delay in data transmission occurs due to network congestion which causes data transmission to be halted at some midpoint in the stream data being received, data playback is halted because the conventional data reception/playback apparatus cannot perform data playback from the midpoint in the stream data, resulting in lack of real-time performance in data playback.

In order to solve the above-mentioned problems, there is a move afoot to construct a protocol for audio and video only, aside from the HTTP. However, such protocol for audio and video only will be an unprecedented one and, therefore, much time and cost will be spent before it is widely available.

Further, according to the HTTP, the quantity of data to be transmitted is controlled according to network congestion. However, when performing synchronous playback of plural stream data while receiving them simultaneously, since the quantity of data to be transmitted should be controlled for each connection, the quantity of data per unit time will vary from connection to connection.

Hereinafter, this problem will be described more specifically with reference to FIGS. **10** and **11**.

FIG. **10** is a graph illustrating an example of the quantity of data that is stored in the reception buffer of the data reception/playback apparatus (hereinafter referred to as "buffer quantity"). The abscissa shows the time, and the ordinate shows the buffer quantity. The data received by the reception means is successively input to the reception buffer, and the stored data is successively taken out by the playback means. FIG. **10** shows the case where two streams of data **1001** and **1002** are received and played simultaneously.

In FIG. **10**, the quantity of received data gradually decreases due to network congestion or the like, and the data of the stream **1** (**1001**) runs out at time T**1** (**1003**), whereby data playback is halted. Since the stream data **1** cannot be played any more, playback is halted until sufficient data is stored in the reception buffer. In this state, however, synchronous playback of the stream data **1** and the stream data **2** cannot be performed, and therefore, playback of the stream data **2** (**1002**) is also halted, and playback of the stream data **2** is resumed when a sufficient amount of stream data **1** is stored.

The result is shown in FIG. **11**. It is assumed that the stream data **1** (**1101**) in the reception buffer runs out at time T**1** (**1103**). At this time, playbacks of the stream data **1** and the stream data **2** (**1002**) are stopped simultaneously. However, since data reception is still continued in the connection of the stream data **2**, the maximum buffer quantity is exceeded at time T**2** (**1104**). As the result, synchronous playback of plural stream data while receiving them simultaneously cannot be achieved.

SUMMARY OF THE INVENTION

The present invention is made to solve the above-described problems. Accordingly, an object of the present invention is to provide a data reception/playback method, a data reception/playback apparatus, a data transmission method, and a data transmission apparatus which are able to realize playback control functions that are useful in audio/video playback, such as a playback from some midpoint in stream data, a suspension of playback, and a change of playback speed, when performing audio/video transmission using the HTTP, and to avoid degradation of a data quality and overflow of reception buffer even when a transmission delay occurs due to network congestion.

Other objects and advantages of the invention will more become apparent from the following detailed description. The detailed description and the specific embodiments described herein are provided only for illustration since various additions and modifications within the scope of the present invention will be apparent to those of skill in the art from the detailed description.

According to a first aspect of the present invention, there is provided a data reception/playback method for receiving and playing stream data including at least one of audio and video. This method comprises the steps of: before receiving the stream data, requesting a transmitting end to transmit part or whole of a playback start position table including at least one position where data playback can be started from some midpoint in the stream data; receiving the playback start position table; selecting one playback start position from the received playback start position table; requesting the transmitting end to transmit the stream data from the selected playback start position; and receiving and playing the stream data which has been transmitted from the playback start position. In this method, a playback start position table containing playback start positions is received from the transmitting end in advance of data playback, a playback start position is selected from the table, and transmission of data from the selected playback start position is requested to the transmitting end. Therefore, data playback from some midpoint in stream data is achieved.

According to a second aspect of the present invention, in accordance with the data reception/playback method of the first aspect, the playback start position table is stored in a file which is different from a file containing the stream data, transmission of the file containing the playback start position table is requested to the transmitting end before reception of the stream data, and the playback start position table is extracted from the received file containing the table.

According to a third aspect of the present invention, in accordance with the data reception/playback method of the first aspect, the playback start position table, the stream data, and information about the position of the playback start position table are stored in one file, transmission of the file is requested to the transmitting end, and the information about the position of the playback start position table is extracted from the data of the received file. Further, transmission of the file from the position which is indicated by the information about the position of the playback start position table is requested to the transmitting end, and the playback start position table is obtained from the received data.

According to a fourth aspect of the present invention, in accordance with the data reception/playback method of the first aspect, the playback start position table received at the time of data playback is stored, and the stored table is used for the next and later data playback.

According to a fifth aspect of the present invention, in accordance with the data reception/playback method of the first aspect, when playing the stream data from the head of the stream, the stream data is received and played without requesting transmission of the playback start position table. Further, when playing the stream data from some midpoint in the stream, transmission of the playback start position table is requested.

According to a sixth aspect of the present invention, in accordance with the data reception/playback method of the third aspect, the information about the position of the playback start position table is stored at the time of data playback, and this positional information is used for the next and later data playback.

According to a seventh aspect of the present invention, there is provided a data reception/playback apparatus for receiving and playing stream data including at least one of audio and video. This apparatus comprises: transmission request sending means for sending a transmission request to a transmission apparatus; reception means for receiving data transmitted from the transmission apparatus in response to the transmission request; playback start position selection means for selecting a playback start position from a playback start position table where at least one playback start position is stored; and playback means for playing the stream data. In this apparatus, the transmission request sending means requests the transmission apparatus to transmit the playback start position table, the reception means receives the playback start position table, the transmission start position selection means selects a playback start position from the playback start position table, the transmission request sending means requests the transmission apparatus to transmit the stream data from the playback start position, the reception means receives the stream data, and the playback means plays the received stream data. This apparatus receives a playback start position table containing playback start positions from the transmission apparatus in advance of data playback, selects a playback start position from the received table, and requests the transmission apparatus to transmit data from the selected playback start position. Therefore, data playback from some midpoint in stream data is achieved.

According to an eighth aspect of the present invention, there is provided a data reception/playback method for receiving and playing stream data including at least one of audio and video. In this method, when data playback is to be halted temporarily, a request for transmission halt is made to the transmitting end by halting data reception from a lower communication protocol. Further, when data playback is to be restarted, a request for transmission restart is made to the transmitting end by restarting data reception from the lower communication protocol. In this method, since a lower communication protocol requests the transmitting end to halt data transmission by halting data reception from the lower communication protocol, a temporary halt of data playback can be achieved. Further, when restarting data playback, the lower communication protocol requests the transmitting end to transmit data by restarting data reception from the lower communication protocol.

According to a ninth aspect of the present invention, there is provided a data reception/playback method for receiving and playing stream data including at least one of audio and video. In this method, when receiving and playing plural stream data simultaneously by using plural connections which are individually controllable, if reception of stream data in a connection is delayed for a playback time, playback of all the stream data is halted, and a request for suspension of data transmission in the connections including stream data other than the stream data which is delayed in reception is output to the transmitting end. Further, when the quantity of the stream data which is delayed in reception exceeds a predetermined value, playback of all the stream data is restarted and a request for restart of data transmission in the suspended connections is output to the transmitting end. Therefore, it is possible to avoid degradation in quality of played data due to interruptions of data and an overflow of a reception buffer.

According to a tenth aspect of the present invention, there is provided a data reception/playback apparatus for receiving and playing stream data including at least one of audio and video. This apparatus comprises: transmission request sending means for requesting a transmission apparatus to transmit plural stream data; a reception means for receiving the stream data; reception buffer for storing the stream data; playback means for playing the stream data stored in the reception buffer; and reception buffer monitor means for monitoring the quantity of data stored in the reception buffer. In this apparatus, when the reception buffer monitor means detects that reception of stream data is delayed for a playback time, the playback means halts playback of all the stream data, and the transmission request sending means requests the transmission apparatus to suspend data transmission in connections including stream data other than the stream data which is delayed in reception. When the reception buffer monitor means detects that the quantity of the stream data which is delayed in reception exceeds a predetermined value, the playback means restarts playback of all the stream data, and the transmission request sending means requests the transmission apparatus to restart data transmission in the connection which is suspended. Therefore, it is possible to avoid degradation in quality of played data due to interruptions of data and an overflow of the reception buffer.

According to an eleventh aspect of the present invention, there is provided a data transmission method for transmitting stream data including at least one of audio and video according to a playback speed which is specified by a receiving end. This method comprises the steps of: having a plurality of files containing stream data of different playback speeds; receiving a request from the receiving end for the transmission of stream data including information of a playback speed; selecting a file containing stream data corresponding to the playback speed information; and transmitting the data of the selected file. Therefore, data transmission according to a desired playback speed is achieved, and the playback speed can be controlled.

According to a twelfth aspect of the present invention, there is provided a data transmission apparatus for transmitting stream data including at least one of audio and video according to a playback speed which is specified by a receiving end. This apparatus comprises: data storage means having, as files, plural stream data having different playback speeds; a playback speed/file mapping table buffer containing a playback speed/file mapping table which indicates the correspondences between the playback speeds and the files; transmission request reception means for receiving and analyzing a request for transmission stream data from the receiving end; playback speed information extraction means for extracting information of a playback speed, from the transmission request received by the transmission request reception means; file selection means for selecting a file corresponding to the playback speed with reference to the playback speed/file mapping table which is stored in the playback speed/file mapping table buffer; file reading means for reading the file selected by the file selection means from the data storage means; and transmission means for transmitting the data of the file read by the file reading means. Therefore, data transmission according to a desired playback speed is achieved, and the playback speed can be controlled.

BRIEF DESCRIPTION OF THE DRAWINGS

FIG. **1** is a diagram illustrating an example of a file format containing stream data.

FIG. **2** is a diagram showing the flow of transmission and reception according to HTTP in the case where a range of data to be transmitted is specified.

FIG. **3** is a diagram illustrating an example of a file format to be used by a data reception/playback apparatus according to a first embodiment of the invention.

FIG. **4** is a block diagram illustrating the construction of the data reception/playback apparatus according to the first embodiment.

FIGS. **5**(*a*) and **5**(*b*) are diagrams illustrating an example of a file format to be used by a data reception/playback apparatus according to a second embodiment of the invention.

FIG. **6** is a diagram illustrating an example of a file format to be used by a data reception/playback apparatus according to the second embodiment, wherein a playback start position table and information about the position of the table are arranged.

FIG. **7** is a block diagram illustrating the construction of the data reception/playback apparatus according to the second embodiment.

FIG. **8** is a block diagram illustrating the construction of a data reception/playback apparatus according to a third embodiment of the invention.

FIG. **9** is a conceptual diagram illustrating the manner of simultaneously transmitting/receiving plural stream data.

FIG. **10** is a graph illustrating the quantity of data in a reception buffer when plural stream data are simultaneously transmitted/received.

FIG. **11** is a graph illustrating the quantity of data in a reception buffer when plural stream data are simultaneously transmitted/received, in the case where data playback is halted when the reception buffer becomes empty.

FIG. **12** is a block diagram illustrating the construction of a data reception/playback apparatus according to a fourth embodiment of the invention.

FIG. **13** is a flowchart illustrating the operation of the data reception/playback apparatus according to the fourth embodiment.

FIG. **14** is a graph illustrating the quantity of data in a reception buffer of the data reception/playback apparatus according to the fourth embodiment.

FIG. **15** is a block diagram illustrating the construction of a data transmission apparatus according to a fifth embodiment of the invention.

FIG. **16** is a diagram illustrating an example of a playback-speed/file mapping table.

FIG. **17** is a diagram illustrating the flow of transmission and reception according to HTTP.

FIG. **18** is a block diagram illustrating the construction of the conventional data reception/playback apparatus.

FIG. **19** is a block diagram illustrating the conventional data transmission apparatus.

DETAILED DESCRIPTION OF THE PREFERRED EMBODIMENTS

First Embodiment

Hereinafter, a data reception/playback apparatus and a data reception/playback method according to a first embodiment of the present invention will be described with reference to FIGS. **1** to **7**.

The data reception/playback apparatus or method according to this first embodiment enables data playback from some midpoint in a stream of file data received by the data reception/playback apparatus. That is, the data reception/playback apparatus or method of the first embodiment enables playback of audio/video contents from an arbitrary position in stream data by the function of playing the stream data from some midpoint (hereinafter referred to as "jump playback function"), thereby improving the convenience of the data reception/playback apparatus.

FIG. **1** is a diagram illustrating a general file format of stream data. In FIG. **1**, a stream data storage area **102** is divided into plural units, and each unit contains unit header information **104** (e.g., data size information, playback time information, and the like) and stream data **105**. A header information area **101** contains information such as the types of media stored in the respective units of the stream data storage area **102**.

Next, a method of receiving data from some midpoint in a file using the HTTP will be described with reference to FIG. **2**. As shown in FIG. **2**, in a transmission request **203** by which the data reception/playback apparatus **201** requests the transmission apparatus **202** to transmit data, a transmission range **204** indicating a transmission start position is specified separately from specifying a file to be transmitted, whereby the data reception/playback apparatus can receive the data from a desired position in the file. The specified transmission start position indicates the number of bytes from the head of the file.

Usually, the size of each unit which is included in the stream data is variable. Therefore, when the data reception/playback apparatus performs data playback from the head of the file, the data reception/playback apparatus can correctly read the stream data from the file by utilizing the size information which is included in the unit header information attached to each unit (refer to FIG. **1**). However, when the data reception/playback apparatus receives the stream data from some midpoint of the file, the data reception/playback apparatus cannot specify the head position of the unit and therefore cannot read the stream data correctly.

In order to solve this problem, in this first embodiment, the data transmission apparatus transmits a file containing a playback start position table **301** having at least one playback start position in the file as shown in FIG. **3**, separately from the file containing the stream data, and the data reception/playback apparatus makes a request for data transmission from the transmission apparatus based on the playback start position table **301**.

Thereby, the data reception/playback apparatus can specify the unit head position even when the data reception/playback apparatus receives the data from some midpoint in the file. Thereby, the data reception/playback apparatus can analyze the file format to correctly take the stream data from the file. FIG. **3** shows an example of a playback start position table **301**. In FIG. **3** playback start positions **302**, **303**, and **304** indicate, for example, the head positions of units constituting the stream data storage areas, and each playback start position indicates the number of bytes from the head position of the stream data storage area **102**.

Hereinafter, with reference to FIG. **4**, a description will be given of the data reception/playback apparatus according to the first embodiment which makes a request for data transmission based on the transmission start position table **301** containing the playback start positions (positions in the file where data playback is possible).

FIG. **4** is a block diagram illustrating the data reception/playback apparatus according to the first embodiment. In

FIG. **4**, the same reference numerals as those shown in FIG. **18** denote the same or corresponding components and signals.

The data reception/playback apparatus **401** comprises: a control means **1801**; a transmission request sending means **1803**; a reception means **1806**; a reception buffer **1808**; a playback means **1812**; a playback start position table extraction means **403** for extracting a playback start position table **404** from received data **402** that is stored in the reception buffer **1808**; a playback start position table buffer **405** for storing the playback start position table **404**; and a playback start position selection means **407** for selecting a playback start position **408** from the playback start position table **404** stored in the playback start position table buffer **405**.

The data reception/playback apparatus **401** so constructed operates as follows.

The control means **1801** instructs the transmission request sending means **1803** to request transmission of the playback start position table from the transmission apparatus. Then, the transmission request sending means **1803** specifies, as a transmission request **1804**, a data identifier of a file of the transmission start position table, and transmits the request **1804** to the transmission apparatus.

Upon receipt of the transmission request **1804** from the data reception/playback apparatus **401**, the transmission apparatus analyzes the transmission request **1804**, and transmits to the data reception/playback apparatus the file of the playback start position table corresponding to the data identifier.

The reception means **1806** of the data reception/playback apparatus **401** receives the file of the transmission start position table which is transmitted from the transmission apparatus as a transmission response **1805** to the transmission request **1804**, and stores the data **1807** (playback start position table) of the transmission response **1805** in the reception buffer **1808**.

Next, the playback start position table extraction means **403** extracts the playback start position table **404** from the data that is stored in the reception buffer **1808**, and stores the extracted playback start position table **404** in the playback start position table buffer **405**. Then, the playback start position selection means **407** selects a playback start position **408** from the playback start position table **406** which is stored in the playback start position table buffer **405**, and outputs the selected playback start position **408** to the control means **1801**.

When there are plural playback start positions in the playback start position table **406**, the method of selecting a playback start position by the playback start position selection means **407** may be arbitrarily set. For example, the playback start position selection means **407** may select a playback start position which is nearest to the playback start position that is indicated by the user of the data reception/playback apparatus.

The playback start position that is indicated by the user or the like is not restricted to that which is specified by using the byte position. For example, the byte positions corresponding to the playback times at equal intervals (e.g., byte positions corresponding to the playback times 1 sec., 2 sec., 3 sec., . . .) may be stored in the playback start position table, whereby the playback start position can be specified by the playback time.

Next, the control means **1801** instructs the transmission request sending means **1803** to make a request for transmission of stream data from the transmission start position **408** which is selected by the playback start position selection means **407**. The transmission request sending means **1803** specifies a transmission range **204** as shown in FIG. **2** based on the transmission start position which is specified by the control means **1801**, and sends a transmission request **1804** to the transmission apparatus. The reception means **1806** receives a transmission response **1805** in response to the transmission request **1804**, and stores the stream data of the transmission response **1805** in the reception buffer **1808**. The playback means **1812** plays the stream data stored in the reception buffer **1808**, and outputs the played data as an output signal **1813**.

As described above, according to the first embodiment, the data transmission start position from the transmission apparatus is decided based on the transmission start position table which has been previously received by the data reception/playback apparatus, whereby the data reception/playback apparatus can receive the data from the playable position such as the unit head position in the file. Therefore, even when the data reception/playback apparatus receives the stream data from some midpoint in the stream, the data reception/playback apparatus can correctly play the stream data, thereby realizing the jump playback function.

Second Embodiment

Hereinafter, a data reception/playback method and a data reception/playback apparatus according to a second embodiment of the present invention will be described.

The data reception/playback method and apparatus according to this second embodiment are different from those of the first embodiment in that the above-described playback start position table is stored in the file containing the stream data, whereas in the first embodiment the playback start position table and the stream data are stored in different files.

FIG. **5**(*a*) shows an example of a format where a playback start position table area is placed in the vicinity of the head of a file. Although, in FIG. **5**(*a*), the playback start position table area **301** containing the playback start position table follows the head information area **201** at the head of the file, the playback start position table area **301** may be placed before the header information area **201**.

Hereinafter, the data reception/playback apparatus according to the second embodiment, which realizes the jump playback function, will be described.

The construction of the data reception/playback apparatus according to the second embodiment is identical to that of the data reception/playback apparatus already described for the first embodiment of FIG. **4** and, therefore, does not require repeated description.

Next, the operation of the data reception/playback apparatus according to the second embodiment will be described with reference to FIG. **4**.

The control means **1801** instructs the transmission request sending means **1803** to make a request for the transmission of a file containing stream data. The transmission request sending means **1803** specifies, as a transmission request **1804**, the data identifier of the file containing the stream data which is specified by the control means **1801**, and sends the transmission request **1804** to the transmission apparatus.

Upon receipt of the transmission request **1804** from the data reception/playback apparatus **401**, the transmission apparatus analyzes the transmission request **1804**, and transmits to the data reception/playback apparatus the file containing the stream data corresponding to the data identifier for which the transmission request is made.

When the file containing the stream data is transmitted from the transmission apparatus as a transmission response

1805 to the transmission request **1804**, the reception means **1806** of the data reception/playback apparatus **401** sequentially receives the file and stores the file containing the stream data in the reception buffer **1808**.

The playback start position table extraction means **403** extracts the playback start position table **404** from the playback start position table area **301** of the file shown in FIG. **5**(*a*), and outputs the extracted playback start position table **404** to the playback start position table buffer **405**. Since the playback start position table area **301** is placed in the vicinity of the head of the file, the playback start position table can be extracted in a short amount of time from the start of data reception.

After the playback start position table extraction means **403** extracts the playback start position table **404**, the control means **1801** of the data reception/playback apparatus **401** decides whether the data is to be played from the head of the file or from some midpoint in the file. When the data is to be played from the head of the file, the stream data storage area is subsequently received and played. On the other hand, when the data is to be played from some midpoint in the file, data reception is halted temporarily, and data playback is performed from the playback start position **408** which is selected from the playback start position table by the playback start position selection means **407**.

As described above, the playback start position table stored in the file is extracted in advance of data playback, and when the data is to be played from some midpoint in the file, data reception is suspended so as to decide the data transmission start position from the transmission apparatus based on the extracted playback start position table. Thereby, the data reception/playback apparatus can correctly play the stream data even when it receives the data from some midpoint in the stream data, realizing the jump playback function.

While the playback start position table is stored in the vicinity of the head of a file in the second embodiment, the table may be stored so as to occupy a fixed-size area from the end of the file.

FIG. **5**(*b*) shows an example of a format where a playback start position table **301** is stored at the end of a file. According to the transmission range specification **204** by the HTTP, the transmission range can also be specified from the end of a file. When the playback start position table is stored so as to occupy a fixed-size area from the end of the file, the data reception/playback apparatus can receive the playback start position table stored at the end of the file, in advance of data reception. The transmission range specification from the end of the file by the HTTP is performed by setting the transmission range at a minus value. For example, when −1000 is specified as the transmission range, 1000 bytes of data from the end of the file are transmitted to the data reception/playback apparatus.

Hereinafter, with reference to FIG. **4**, a description will be given of the operation of the data reception/playback apparatus in the case where the playback start position table is stored so as to occupy a fixed-size area from the end of a file.

The control means **1801** instructs the transmission request sending means **1803** to make a request for the transmission of a file containing stream data, and specifies the size of the playback start position table area from the end of the file, as a transmission range specification in a transmission request.

This is realized by storing the playback start position table so as to occupy a fixed-size area from the end of the file, whereby the data reception/playback apparatus can receive only the area of the playback start position table in advance of data reception.

The transmission request sending means **1803** specifies, as a transmission request **1804**, the data identifier of the file containing the stream data which is specified by the control means **1801**, and the size of the playback start position table area from the end of the file (transmission range specification), and sends the transmission request **1804** to the transmission apparatus.

Upon receipt of the transmission request **1804** from the data reception/playback apparatus **401**, the transmission apparatus analyzes the transmission request **1804**, and transmits to the data reception/playback apparatus a transmission-range-specified transmission start position table which is included in the file corresponding to the data identifier that is specified by the transmission request **1804**.

When the transmission start position table, as a transmission response **1805** from the transmission apparatus, is input to the data reception/playback apparatus **401**, the reception means **1806** receives the transmission start position table and stores the transmission start position table in the reception buffer **1808**. The playback start position table extraction means **403** extracts the playback start position table from the buffer **1808**, and outputs the extracted playback start position table **404** to the playback start position table buffer **405**.

After the playback start position table extraction means **403** extracts the playback start position table **404**, the control means **1801** of the data reception/playback apparatus **401** decides whether the data is to be played from the head of the file or from some midpoint in the file. When the data is to be played from the head of the file, the stream data storage area is subsequently received and played. On the other hand, when the data is to be played from some midpoint in the file, data reception is halted temporarily, and data playback is performed from the playback start position **408** which is selected from the playback start position table by the playback start position selection means **407**.

As described above, even when the transmission start position table is stored so as to occupy a fixed-size area from the end of the file, since the transmission range from the end of the file is specified, the reception/playback apparatus **401** can receive the transmission start position table in advance of data reception. Therefore, even when the data reception/playback apparatus receives the stream data from some midpoint in the stream, the data reception/playback apparatus can correctly play the stream data, thereby realizing the jump playback function.

Furthermore, information indicating the position of the playback start position table in the file may be stored in the vicinity of the head of the file, and the playback start position table that is stored in the file may be extracted according to this positional information.

FIG. **6** shows an example of a format where stream data, a playback start position table, and information about the position of the playback start position table are stored.

As shown in FIG. **6**, information **601** indicating the position of the playback start position table is stored in the file.

The information **601** about the position of the playback start position table does not necessarily indicate the number of bytes from the head of the file to the playback start position table. For example, when the playback start position table area is placed after the stream data area, the information **601** about the position of the playback start position table corresponds to the size of the whole stream data area, and the position of the playback start position table can be calculated when the data has been received up to the head of the stream data area. That is, the position of the playback

start position table is expressed by (the byte position at the head of the stream data area)+(the size of the stream data area).

FIG. **7** is a block diagram illustrating a data reception/playback apparatus which receives the stream data in the format shown in FIG. **6** and which realizes jump playback. In FIG. **7**, the same reference numerals as those described for the data reception/playback apparatuses shown in FIGS. **4** and **18** denote the same components and signals.

The data reception/playback apparatus **701** comprises a control means **1801**; a transmission request sending means **1803**; a reception means **1806**; a reception buffer **1808**; a playback means **1812**; a playback start position table extraction means **403**; a playback start position table buffer **405**; a playback start position table selection means **407**; and a playback start position table position information extraction means **703** for extracting information indicating the position of a playback start position table in a file.

The data reception/playback apparatus **701** so constructed operates as follows. The control means **1801** instructs the transmission request sending means **1803** to make a request for the transmission of a file containing stream data, a playback start position table, and information about the position of the playback start position table. Then, the transmission request sending means **1803** sends a transmission request **1804** to the transmission apparatus.

The transmission apparatus transmits the requested file to the reception/playback apparatus based on the transmission request **1804**.

When the file corresponding to the transmission request **1804** is transmitted from the transmission apparatus, the reception means **1806** of the data reception/playback apparatus **701** receives a transmission response **1805** to the transmission request **1804** and stores the file in the reception buffer **1808**.

The playback start position table position information extraction means **703** extracts the information **601** about the position of the playback start position table, and outputs the extracted information about the position of the playback start position table **704** to the control means **1801**.

Upon receipt of the positional information **704**, the control means **1801** decides whether the data is to be played from the head of the file or from some midpoint in the file. When the data is to be played from the head of the file, the following stream data storage area is received and played.

On the other hand, when the data is to be played from some midpoint in the file, data reception is temporarily halted, and the control means **1801** notifies the transmission request sending means **1803** of the position of the playback start position table which is indicated by the positional information **704** extracted by the positional information extraction means **703**, and the transmission request sending means **1803** sends the positional information **704** as a file transmission request **1804** to the transmission apparatus.

Upon receipt of the transmission request **1804**, the transmission apparatus transmits to the data reception/playback apparatus **701** file data (playback start position table) in the position which is indicated by the transmission request **1804**.

The reception means **1806** of the data reception/playback apparatus **701** receives the playback start position table as a transmission response **1805** to the transmission request **1804**, and stores the playback start position table in the reception buffer **1808**. The playback start position table extraction means **403** extracts the playback start position table **404** from the buffer **1808**, and outputs the extracted playback start position table **404** to the playback start position table buffer **405**.

After the playback start position table extraction means **403** extracts the playback start position table **404** from the playback start position table buffer **405**, the control means **1801** decides whether the data is to be played from the head of the file or from some midpoint in the file. When the data is to be played from the head of the file, the stream data storage area is subsequently received and played. On the other hand, when the data is to be played from some midpoint in the file, data reception is temporarily halted, and data playback is performed from the playback start position **408** which is selected from the playback start position table by the playback start position selection means **407**.

As described above, since the information about the position of the playback start position table is stored in the vicinity of the head of the file, the data reception/playback apparatus can extract the playback start position table stored in the file, and can obtain the transmission start position table in advance of data reception. Therefore, even when the data reception/playback apparatus receives the stream data from some midpoint in the stream, the data reception/playback apparatus can correctly play the stream data, thereby realizing the jump playback function.

In the first and second embodiments, the head position of each unit in a file format is used as an example of a playback start position. However, the playback start position depends on the stream data coding method. When data playback can be started only from the head unit of an intra-frame coded file, only the head unit of the intra-frame coded file may be used as a playback start position.

Further, in the first and second embodiments, a request for the transmission of the playback start position table is made before starting data playback. However, a once received playback start position table may be stored, and this stored table may be used for data playback when starting second or later playback for the same data, without making a request for the table.

Furthermore, in the first and second embodiments, the data reception/playback apparatus obtains the playback start position table from the file every time before starting data playback. However, since the data reception/playback apparatus does not need the playback start position table when playing the data from the head of the file, the data reception/playback apparatus may obtain the table only when performing jump playback.

Furthermore, in the second embodiment, the data reception/playback apparatus obtains the information about the position of the playback start position table before starting data playback and, thereafter, the data playback/reception apparatus obtains the playback start position table. However, a once received information about the position of the playback start position table may be stored (when playing the data from the head of the file, only the information about the position of the playback start position table is obtained and stored), and the stored information may be used to obtain the playback start position table only when performing a second or later jump playback for the same data.

Moreover, although, in the first and second embodiments, the data reception/playback apparatus makes a request for transmission of the whole playback start position table stored in the transmission apparatus, the data reception/playback apparatus may make a request for the transmission of a part of the playback start position table which is stored in the transmission apparatus.

Furthermore, the data transmission protocol to be used in this second embodiment is not restricted to the HTTP. Other protocols having similar functions may be used.

Third Embodiment

Hereinafter, a data reception/playback apparatus and a data reception/playback method according to a third embodiment of the present invention will be described with reference to FIG. **8**.

The data reception/playback apparatus and method according to the third embodiment are applicable to data transmission using a transmission protocol such as the HTTP, wherein transmission of data is halted by halting reception of data from a lower communication protocol, thereby temporarily halting data playback in a data playback unit.

FIG. **8** is a block diagram illustrating a data reception/playback apparatus **801** according to the third embodiment. In FIG. **8**, the same reference numerals as those described for the conventional apparatus shown in FIG. **18** denote the same components and signals.

The data reception/playback apparatus **801** comprises a control means **1801**, a transmission request sending means **1803**, a reception means **1806**, a reception buffer **1808**, a playback means **1812**, and a reception halt/restart instruction means **812**.

The data reception/playback apparatus **801** so constructed operates as follows.

Initially, the data reception/playback apparatus **801** starts data playback in a similar manner as described for the conventional apparatus **1701**. When a temporary halt is requested by the user of the data reception/playback apparatus **801** or the like, the control means **1801** gives an instruction **811** of a temporary halt to the reception halt/restart instruction means **812**. The reception halt/restart instruction means **812** instructs **813** the reception means **1806** to halt data reception.

Hereinafter, the method of halting data reception will be described. The HTTP employs TCP (Transport Control Protocol) as a lower protocol. So long as the HTTP receives no data from the processing section of the TCP, the buffer of the TCP, which is called a window buffer, is filled up in due time. At this time, the TCP processing section notifies the transmission apparatus that the size of the window buffer is 0. Upon receipt of this notification, the transmission apparatus halts data transmission. Since data transmission is halted as described above, data playback is halted.

The following process is performed to restart data playback. That is, the reception halt/restart instruction means **812** instructs **813** the reception means **1806** to restart data reception, and the control means **1801** instructs **1810** the playback means **1812** to perform data playback.

The above-described construction and operation of the data reception/playback apparatus allow for a temporary halt and restart of data playback.

As another method for halting and restarting data playback, the data reception/playback method described for the first or second embodiment may be employed. To be specific, the data reception/playback apparatus stores the byte position of the stream data, which has been received, when halting data playback, and thereafter, disconnects the HTTP. When restarting playback, the apparatus connects the HTTP, and specifies a transmission range by the data reception/playback method described for the first or second embodiment based on the stored byte position, and requests the transmission apparatus to transmit stream data.

Thereby, a temporary halt and restart of data playback are achieved in the data reception/playback apparatus.

Fourth Embodiment

Hereinafter, a data reception/playback apparatus and a data reception/playback method according to a fourth embodiment of the present invention will be described with reference to FIG. **12**.

The data reception/playback apparatus and method according to the fourth embodiment avoid degradation of image quality and overflow of the reception buffer even when transmission delay occurs due to network congestion wherein plural stream data are simultaneously received and played.

FIG. **12** is a block diagram illustrating the data reception/playback apparatus **1201** according to the fourth embodiment. In FIG. **12**, the same reference numerals as those described for the conventional data reception/playback apparatus shown in FIG. **18** denote the same components and signals. Reference numerals with a trailing "a" or "b" correspond to the same reference numerals without "a" or "b" shown in FIG. **18**.

The data reception/playback apparatus **1201** comprises a control means **1801**, a transmission request sending means **1803***a* and **1803***b*, reception means **1806***a* and **1806***b*, reception buffers **1808***a* and **1808***b*, playback means **1812***a* and **1812***b*, and reception buffer monitor means **1202***a* and **1202***b* for monitoring the quantity of data being stored in the reception buffers **1808***a* and **1808***b*.

The data reception/playback apparatus **1201** so constructed operates as follows.

The control means **1801** instructs the transmission request sending means **1803***a* and **1803***b* to request the transmission of data from the transmission apparatus. The transmission request sending means **1803***a* transmits a transmission request **1804***a* to the transmission apparatus, while the transmission request sending means **1803***b* transmits a transmission request **1804***b* to the transmission apparatus.

The reception means **1806***a* receives a transmission response **1805***a* to the transmission request **1804***a* and stores the transmission response **1805***a* in the reception buffer **1808***a*. The reception means **1806***b* receives a transmission response **1805***b* to the transmission request **1804***b* and stores the transmission response **1805***b* in the reception buffer **1808***b*.

The reception buffer monitor means **1202***a* monitors the quantity of data stored in the reception buffer **1808***a*. The reception buffer monitor means **1202***b* monitors the quantity of data stored in the reception buffer **1808***b*.

It is assumed that, as the result of transmission delay due to network congestion, the quantity of data received by either the reception means **1806***a* or **1806***b* decreases and thereby the reception buffer which stores the received data becomes empty. In this case, the data reception/playback apparatus according to the fourth embodiment operates as follows.

FIG. **13** is a flowchart for explaining the operation of the data reception/playback apparatus according to the fourth embodiment. When either the reception buffer **1808***a* or **1808***b* becomes empty, playback of all stream data is halted (S**1301**). Next, a request for halting data transmission is sent to the transmission apparatus, with respect to the connections which receives the stream data other than the stream data corresponding to the reception buffer which has become empty (S**1302**).

As a method for halting and restarting data reception, the method described for the third embodiment may be used. That is, data playback is halted until a predetermined quantity of data is stored in the reception buffer which has become empty (S**1303**). When a predetermined quantity of data is stored in the reception buffer, data playback for all streams is restarted (S**1304**).

FIG. **14** is a graph illustrating the quantity of data stored in the reception buffer according to the above-described operation flow.

At time T**1** (**1403**), the buffer for stream **1** (**1401**) becomes empty. At this time, playback of all streams is halted. At time T**4** (**1404**), the quantity of data of stream **1** (**1401**) exceeds a predetermined value and, therefore, playback of all streams is restarted.

As described above, when plural stream data are simultaneously received for synchronous playback, if the quantity of data in a first reception buffer becomes zero, playback of all stream data is halted, and transmission of stream data other than the stream data which is delayed in reception is suspended. When the quantity of stream data which is delayed in reception exceeds a predetermined value, playback of all stream data and suspended transmission of stream data are restarted, whereby data playback can be performed without loss of synchronization and overflow of buffer even when plural streams are received simultaneously.

While two pieces of stream data are processed in the fourth embodiment, the above-mentioned method is applicable to processing three or more pieces of stream data.

Further, while data playback is halted when the reception buffer becomes empty in the fourth embodiment, data playback may be halted when the quantity of data in the reception buffer becomes smaller than a predetermined value or when a difference between the display time information of received stream data and the present time becomes shorter than a predetermined period.

Furthermore, the data transmission protocol according to this fourth embodiment is not restricted to the HTTP. Any other protocol may be used so long as it can control transmission of plural stream data independently. For example, RTSP (Real Time Streaming Protocol) or RTP (Realtime Transport Protocol) may be used.

Fifth Embodiment

Hereinafter, a data transmission apparatus and a data transmission method according to a fifth embodiment of the present invention will be described with reference to FIGS. **15** and **16**.

In this fifth embodiment, the data transmission apparatus stores plural pieces of stream data having different playback speeds, and stream data to be transmitted is switched according to a playback speed requested by a data reception/playback apparatus.

FIG. **15** is a block diagram illustrating the data transmission apparatus according to the fifth embodiment of the invention. In FIG. **15**, the same reference numerals as those described for the conventional transmission apparatus shown in FIG. **19** denote the same components and signals.

The data transmission apparatus **1501** comprises: a transmission request reception means **1902**; a playback speed information extraction means **1502** for extracting playback speed information from a transmission request received by the transmission request reception means **1902**; a file selection means **1504** for selecting a file corresponding to the requested playback speed, according to the playback speed information which is extracted by the extraction means **1502**, the data identifier (URI) corresponding to the file, and a playback-speed/file mapping table; a playback-speed/file mapping table buffer **1505** for storing the playback-speed/file mapping table; a data storage means **1907** for storing plural files corresponding to the playback speeds; a file reading means **1906**; and a transmission means **1909**.

The data transmission apparatus **1501** so constructed operates as follows. It is assumed that a transmission request **1901** from the data reception/transmission apparatus includes information about a playback speed, and usually the playback speed information indicates the ratio to the normal playback speed (e.g., double-speed playback is expressed by 2.0).

The transmission request reception means **1902** receives the transmission request **1901** from the data reception/playback apparatus, and sends the received transmission request **1903** to the playback speed information extraction means **1502**. The extraction means **1502** extracts the playback speed information and the data identifier of the requested data from the transmission request **1901**, and informs them to the file selection means **1504**.

The file selection means **1504** selects a file corresponding to the playback speed, with reference to the playback-speed/file mapping table **1506** stored in the table buffer **1505**, the playback speed information, and the data identifier.

FIG. **16** shows an example of a playback-speed/file mapping table, wherein reference numeral **1601** is a column showing playback speeds, and reference numeral **1602** is a column showing file names corresponding to the playback speeds. For example, when "1.0" is specified as a playback speed from the data reception/playback apparatus, the file selection means **1504** selects a file name "stream.mpg" corresponding to the playback speed "1.0" based on the playback-speed/file mapping table. The file selection means **1504** sends the selection file information **1905** to the file reading means **1906**.

The file reading means **1906** reads the selected file, and outputs the data **1908** of the read file to the transmission means **1909**. The transmission means **1909** transmits the file data **1908** which is outputted from the file reading means **1906**, as a transmission response **1901**, to the data reception/playback apparatus.

As described above, since the transmission apparatus holds the playback-speed/file mapping table and transmits file data corresponding to a transmission speed which is requested by the data reception/playback apparatus, data transmission according to the playback speed is achieved, and the playback speed can be controlled.

The playback-speed/file mapping table may be transmitted from the data transmission apparatus to the data reception/playback apparatus in advance of data transmission, or the data reception/playback apparatus may be provided with the mapping table. In this case, the data reception/playback apparatus selects a file to be requested for transmission, and conducts a transmission request for the selected file.

Furthermore, the data transmission protocol used in this fifth embodiment is not restricted to the HTTP, and other protocols may be used.

What is claimed is:

1. A data reception/playback method for receiving and playing stream data including at least one of audio and video, said method comprising:

requesting, before receiving the stream data, a transmitting end to transmit part or whole of a playback start position table including at least one position where data playback can be started from some midpoint in the stream data;

receiving the playback start position table;

selecting one playback start position from the received playback start position table;

requesting the transmitting end to transmit the stream data from the selected playback start position; and

receiving and playing the stream data which has been transmitted from the playback start position.

2. The data reception/playback method of claim 1, wherein:

the playback start position table is stored in a file which is different from a file containing the stream data;

transmission of the file containing the playback start position table is requested to the transmitting end before reception of the stream data; and

the playback start position table is extracted from the received file containing the table.

3. The data reception/playback method of claim 1 wherein:

the playback start position table, the stream data, and information about the position of the playback start position table are stored in one file;

transmission of the file is requested to the transmitting end;

data of the file is received from the transmitting end;

the information about the position of the playback start position table is extracted from the data of the received file;

transmission of the file from the position indicated by the information about the position of the playback start position table is requested to the transmitting end; and

the playback start position table is obtained from the received data.

4. The data reception/playback method of claim 3, wherein the information about the position of the playback start position table is stored at the time of data playback, and the stored information about the position of the playback start position table is used for the next and later data playback.

5. The data reception/playback method of claim 1, wherein the playback start position table received at the time of data playback is stored, and the stored playback start position table is used for the next and later data playback.

6. The data reception/playback method of claim 1, wherein:

when playing the stream data from the head of the stream, the stream data is received and played without requesting transmission of the playback start position table; and

when playing the stream data from some midpoint in the stream, transmission of the playback start position table is requested.

7. A data reception/playback apparatus for receiving and playing stream data including at least one of audio and video, said apparatus comprising:

transmission request sending means for sending a transmission request to a transmission apparatus;

reception means for receiving data transmitted from the transmission apparatus in response to the transmission request;

playback start position selection means for selecting a playback start position from a playback start position table where at least one playback start position is stored; and

playback means for playing the stream data;

wherein said transmission request sending means requests the transmission apparatus to transmit the playback start position table, said reception means receives the playback start position table, said transmission start position selection means selects a playback start position from the playback start position table, said transmission request sending means requests the transmission apparatus to transmit the stream data from the playback start position, said reception means receives the stream data, and said playback means plays the received stream data.

8. A data reception/playback method for receiving and playing stream data including at least one of audio and video, wherein:

when receiving and playing plural stream data simultaneously by using plural connections which are individually controllable, if reception of stream data in a connection is delayed for a playback time, playback of all the stream data is halted, and a request for suspension of data transmission in the connections including stream data other than the stream data which is delayed in reception is output to a transmitting end; and

when the quantity of the stream data which is delayed in reception exceeds a predetermined value, playback of all the stream data is restarted, and a request for restart of data transmission in the suspended connections is output to the transmitting end.

9. A data reception/playback apparatus for receiving and playing stream data including at least one of audio and video, said apparatus comprising:

transmission request sending means for requesting a transmission apparatus to transmit plural stream data;

reception means for receiving the stream data;

a reception buffer for storing the stream data;

playback means for playing the stream data stored in said reception buffer; and

reception buffer monitor means for monitoring the quantity of data stored in said reception buffer;

wherein, when said reception buffer monitor means detects that reception of stream data is delayed for a playback time, said playback means halts playback of all the stream data, and said transmission request sending means requests the transmission apparatus to suspend data transmission in connections including stream data other than the stream data which is delayed in reception; and

when said reception buffer monitor means detects that the quantity of the stream data which is delayed in reception exceeds a predetermined value, said playback means restarts playback of all the stream data, and said transmission request sending means requests the transmission apparatus to restart data transmission in the connection which is suspended.

10. A data transmission method for transmitting stream data including at least one of audio and video, according to a playback speed specified by a receiving end, said method comprising:

having a plurality of files containing stream data of different playback speeds;

receiving a request from the receiving end for transmission of stream data including information of a playback speed;

selecting a file containing stream data corresponding to the playback speed information; and

transmitting the data of the selected file.

11. A data transmission apparatus for transmitting stream data including at least one of audio and video according to a playback speed specified by a receiving end, said apparatus comprising:

data storage means having, as files, plural stream data having different playback speeds;

a playback speed/file mapping table buffer containing a playback speed/file mapping table which indicates the correspondences between the playback speeds and the files;

transmission request reception means for receiving and analyzing a request from the receiving end for transmission stream data;

playback speed information extraction means for extracting information of a playback speed, from the transmission request received by said transmission request reception means;

file selection means for selecting a file corresponding to the playback speed with reference to the playback speed/file mapping table stored in said playback speed/file mapping table buffer;

file reading means for reading the file selected by said file selection means from said data storage means; and

transmission means for transmitting the data of the file read by said file reading means.

* * * * *

UNITED STATES PATENT AND TRADEMARK OFFICE

CERTIFICATE OF CORRECTION

PATENT NO. : 7,051,110 B2
APPLICATION NO. : 09/739648
DATED : May 23, 2006
INVENTOR(S) : Makoto Hagai et al.

It is certified that error appears in the above-identified patent and that said Letters Patent is hereby corrected as shown below:

ON THE TITLE PAGE item [56]

References Cited:

U.S. PATENT DOCUMENTS

Please add reference --U.S. 6,628,302 9/2003 White et al. . . . . .715/717--.

Signed and Sealed this

Nineteenth Day of December, 2006

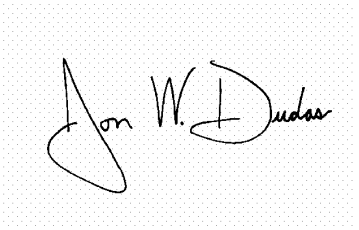

JON W. DUDAS
Director of the United States Patent and Trademark Office