Appendix H - U.S. Patent No. 7,917,367

Cortana

Element	Analysis for Cortana
[11.0] A method for processing multi-modal natural language inputs, comprising:	Cortana can implement a method for processing multi-modal natural language inputs, including voice input, text input, and mouse selection input. 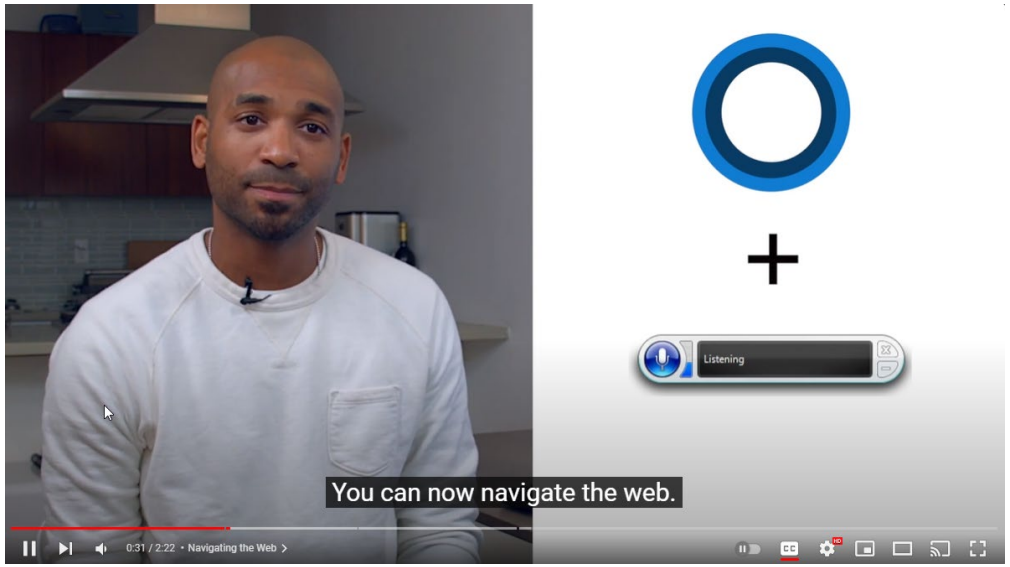 https://www.youtube.com/watch?app=desktop&v=xuiKfUgEvfo **What is the Cortana search box in Windows?** The Cortana search box in Windows is a central place to enter queries and access information quickly. You can use it to search for files, apps, settings, and perform web searches without opening a browser. Just type or speak your query in the search box, and Cortana will provide relevant results. https://www.lenovo.com/us/en/glossary/cortana/?orgRef=https%253A%252F%252Fwww.google.com%252F

MICROSOFT EXHIBIT 1036
Microsoft v. Dialect
IPR2025-01229

Element	Analysis for Cortana
	Cortana typically serves as a dictionary, thesaurus, or encyclopedia to its users. It comes in handy when you intend to save time on redundant tasks that machines can accomplish on their own. You can just type-in or ask your questions and get immediate responses without the need for any intervention. What's the synonym of analyze?, What is the length of the Great Wall of China?, What's the latitude and longitude of San Francisco?, and so on, are examples of questions that can be asked. https://www.spiceworks.com/tech/artificial-intelligence/articles/what-is-cortana/ **Cortana in Windows 10** The Cortana application in the Windows 10 version 2004 and later is a chat application with your personal productivity assistant. This application helps users to quickly get information across the Microsoft 365 platform by just using simply typed or spoken Keywords in queries. https://www.infiflex.com/making-microsoft-365-smarter-with-cortana **5.2. Flexible Item Selection** Unlike traditional over-the-phone spoken dialog systems, PDAs run on different device and form factors (*e.g.* smartphones, PCs and browsers). They have the visual element as an additional modality to communicate the system's response to the user. Visual display of the system's response changes human behavior when interacting with PDAs. In Fig. 2, we show the PDA response to the query "*show me chinese restaurants nearby*". The user can either select one (or more) of the items or choose none and instead reformulate their query. Thus immediately following a PDA's attempt to elicit a selection from a user, the system has two decisions to make; whether

Element	Analysis for Cortana
	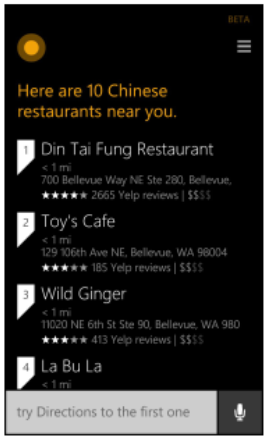 **Fig. 2.** Flexible on-screen item selection https://www.microsoft.com/en-us/research/wp-content/uploads/2016/12/CortanaLUDialog-FromSLTproceedings.pdf

Element	Analysis for Cortana
	Stay on track with Cortana in Windows 10—To help you save time finding what you need and stay focused, we're releasing a new chat-based Cortana experience in Windows 10 focused on enhancing your productivity. With this, you can ask Cortana using natural language to quickly check your schedule, connect with people, set reminders, or add tasks in Microsoft To Do. You can also find local information, get definitions, and keep track of the latest news, weather, and finance updates with Bing as a Cortana optional connected service. Simply type or click on the microphone button and speak commands such as "Am I free at 9?", "Find time with Nestor to talk about the budget," "Join my meeting," "Remind me to review expenses every Friday at 3 PM," and more. This productivity focused experience is now generally available in English for customers in the United States with the Windows 10 May 2020 update. In the coming months, with regular app updates through the Microsoft Store, we'll enhance this experience to support wake word invocation and enable listening when you say "Cortana," offer more productivity capabilities such as surfacing relevant emails and documents to help you prepare for meetings, and expand supported capabilities for international users. https://www.microsoft.com/en-us/microsoft-365/blog/2020/05/27/making-easier-stay-caught-cortana-microsoft-365/ (emphasis added)
[11.1] registering a plurality of mobile devices with a context manager in response to a registration module associated with the context manager receiving a communication from the plurality of mobile devices;	Cortana meets this element. On information and belief, Cortana uses natural language processing (NLP) and natural language understanding (NLU) technology to determine contexts. On information and belief, Cortana uses a context manager to manage contexts for a user dialog; Cortana stores and maintains dialog history, which includes information relating to context for each turn of the dialog.

Element	Analysis for Cortana
	4. LANGUAGE UNDERSTANDING The language understanding (LU) component uses as input either typed text or speech transcription from an open vocabulary speech recognition service and performs semantic analysis on the query to determine the underlying user's intent [8, 9, 4, 15]. Our PDA LU is built to handle multi-domain, multi-turn, contextual query understanding [14, 9, 15, 16], subject to the constraints of the back-end data sources and experiences. The LU module semantically parses and analyses the queries according to a domain-specific semantic schema. Given a requirement to minimize latency and computational costs (dimensions 7,8) deep semantic analysis is not performed. Instead, LU delivers a flat analysis matching the experience requirements while allowing for free form natural language expressions that represent different user intents and slots.

Element	Analysis for Cortana
	Follow-up queries in isolation are ambiguous, *e.g.*, • Turn 1: " how is the weather in New York" (weather) • Turn 2: "what about the weekend" (weather) or • Turn 1: "how is my schedule" (calendar) • Turn 2: "what about the weekend" (calendar) LU modeling thus must be performed in a contextual manner. Here, conversational session information from the history greatly reduces the ambiguity of the current turn. We built a set of models addressing contextual domain, intent and slot modeling [14, 15, 16]. Our current approach involves modeling contextual intent prediction as a sequential tagging problem with previous utterances as features that condition this turn's prediction. Contextual information from beyond LU, such as dialog state (where this is tracked by an experience), and PDA responses are also exploited as effective external features. Contextual modeling of queries reduces the likelihood of abrupt intent or domains switching leading to more coherent interaction during a multi-turn session. **5.4. Hypothesis Ranking and Selection** HRS is the mechanism by which the platform ranks and selects the final response shown to the user. The processing is done in two stages, with an initial ranking of the hypotheses (HR) followed by selection of the best hypothesis according to rank score and other features (HS). One of the key decisions in dealing with open domain requests is the recognition of requests that are not handled by any specialized experience provider and letting such requests fall through to web search. AN OVERVIEW OF END–TO–END LANGUAGE UNDERSTANDING AND DIALOG MANAGEMENT FOR PERSONAL DIGITAL ASSISTANTS, Microsoft Corporation, 2016,

Element	Analysis for Cortana
	available at https://www.microsoft.com/en-us/research/wp-content/uploads/2016/12/CortanaLUDialog-FromSLTproceedings.pdf (emphasis added) **Microsoft's Cortana Intelligence Institute cofounder on building better AI** News By Jason Ward last updated August 12, 2020 **Why is understanding context is so important?** A lot of the help that we require from digital assistants like Cortana depends strongly on the current context. Even location and time of day are important signals about the types of assistance that people are likely to require. For example, we see that users are more likely to request sleep sounds at home in the evening and productivity support, such as calendaring or email, at work during the day. Richer information about the current situation enables better support from Cortana. https://www.windowscentral.com/cortana-intelligence-institute-co-founder-ryen-white-talks-cortana For example, Cortana determines that the context for the second turn relates to restaurant. **5.1. Slot/Entity Carry Over (SCO) and Co-reference** Tracking keywords contained in slots and associated entities enables a certain set of user initiative experiences, *e.g.* • Turn 1: "find french restaurants in seattle" • State 1: cuisine="french", place_type="restaurants", absolute_location="seattle" • Turn 2: "how about chinese" • State 2: cuisine=**"chinese"**, place_type="restaurants", absolute_location="seattle" AN OVERVIEW OF END–TO–END LANGUAGE UNDERSTANDING AND DIALOG

Element	Analysis for Cortana
	MANAGEMENT FOR PERSONAL DIGITAL ASSISTANTS, Microsoft Corporation, 2016, available at https://www.microsoft.com/en-us/research/wp-content/uploads/2016/12/CortanaLUDialog-FromSLTproceedings.pdf For example, Cortana determines the context for the second turn to be related to weather or schedule, depending on prior context. Follow-up queries in isolation are ambiguous, *e.g.*, • Turn 1: " how is the weather in New York" (weather) • Turn 2: "what about the weekend" (weather) or • Turn 1: "how is my schedule" (calendar) • Turn 2: "what about the weekend" (calendar) LU modeling thus must be performed in a contextual manner. Here, conversational session information from the history greatly reduces the ambiguity of the current turn. We built a set of models addressing contextual domain, intent and slot modeling [14, 15, 16]. Our current approach involves modeling contextual intent prediction as a sequential tagging problem with previous utterances as features that condition this turn's prediction. Contextual information from beyond LU, such as dialog state (where this is tracked by an experience), and PDA responses are also exploited as effective external features. Contextual modeling of queries reduces the likelihood of abrupt intent or domains switching leading to more coherent interaction during a multi-turn session. AN OVERVIEW OF END–TO–END LANGUAGE UNDERSTANDING AND DIALOG MANAGEMENT FOR PERSONAL DIGITAL ASSISTANTS, Microsoft Corporation, 2016, available at https://www.microsoft.com/en-us/research/wp-content/uploads/2016/12/CortanaLUDialog-FromSLTproceedings.pdf

Element	Analysis for Cortana
	For example, Cortana can register a plurality of mobile devices with a context manager by associating the mobile devices with the user account. Windows 10 - Sign in and activate Cortana Last Update : 2024/07/17 09:36 SEND TO EMAIL Windows 10 - Sign in and activate Cortana **Sign in Cortana** **Sign in with your MSA** Add your Microsoft Account (MSA) and Cortana will help manage your services all in one place. Click icon ① and Click ②**[Sign in]** 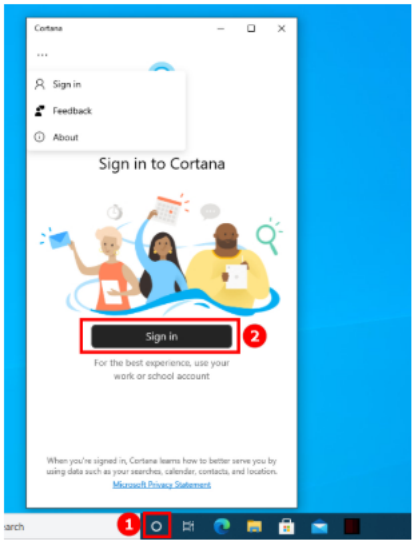 Then input your account to login and continue.

Element	Analysis for Cortana
	Activate Cortana Open Cortana, select **Settings**. ① Click icon and ② Click icon ···, and then ③ Select **[Settings]** 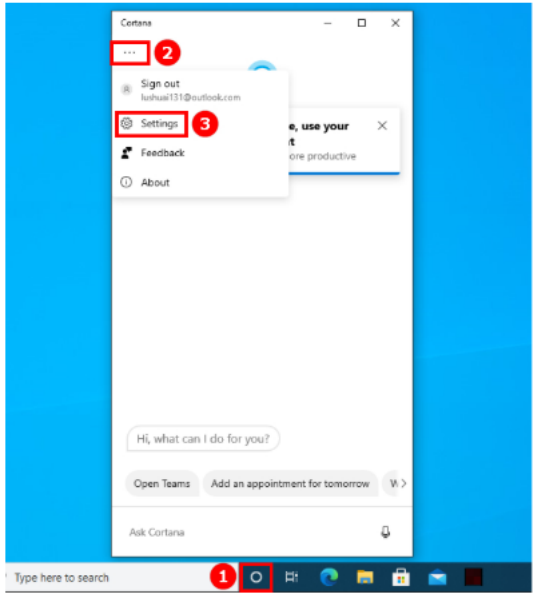 https://www.asus.com/us/support/faq/1014617/#:~:text=Last%20Update%20:%202024/07/,refer%20to%20below%20Microsoft%20link.
[11.2] subscribing the plurality of mobile devices registered with the context manager to one or more context events;	Cortana meets this element.

Element	Analysis for Cortana
	What is Cortana? Cortana is a virtual assistant developed by Microsoft, designed to provide voice-controlled assistance on various devices, including Windows computers, smartphones, and smart speakers. It utilizes natural language processing and machine learning to understand and respond to user commands and queries, making it an essential tool for technology, computing, programming, and communications tasks. **Does Cortana work on smartphones?** Yes, Cortana is available on smartphones running on Windows, Android™, and operating systems. On these devices, Cortana can perform various tasks, such as sending text messages, making calls, setting alarms, and providing directions. **Can Cortana control smart home devices?** Cortana supports a range of smart home devices and services, allowing you to control lights, thermostats, locks, and more using voice commands. It can also integrate with popular smart home platforms, enabling seamless automation and control. **What is a Cortana notebook?** The Cortana notebook is a feature that allows you to customize Cortana's settings and preferences. It contains information about your interests, reminders, and connected accounts, helping Cortana serve you better. https://www.lenovo.com/us/en/glossary/cortana/?orgRef=https%253A%252F%252Fwww.google.com%252F (emphasis added)

Element	Analysis for Cortana
	Windows 10: Cortana now syncs reminders Brad Sams · Feb 13, 2015 09:04 EST · HOT! 10 https://www.neowin.net/news/windows-10-cortana-now-syncs-reminders/ Blog / Windows / Windows 10 / Post Cortana Can Now Sync Notifications From Your Android Phone To Your Windows 10 PC Brad Sams MAY 19, 2016 0 https://www.thurrott.com/windows/windows-10/67251/cortana-can-now-sync-notifications-android-phone-windows-10-pc

Element	Analysis for Cortana
	OPTION ONE **Clear Personal Data Cortana Knows about you on this Device by Signing** 1 Sign out of Cortana (click on link). https://www.tenforums.com/tutorials/24514-clear-personal-data-information-cortana.html

Element	Analysis for Cortana
	7. Cross-Platform Functionality Cortana is available on multiple platforms, including Windows, Android, and iOS. This makes it easy to access Cortana from any device, regardless of the operating system. Users can also access their Cortana settings and preferences across multiple devices. https://botpenguin.com/glossary/cortana-virtual-assistant
[11.3] receiving, at the context manager, a context input from one or more of the plurality of mobile devices registered with the context manager, wherein the context input includes a context change event; and	Cortana meets this element. For example, Cortana can receive context input such as user input from one or more mobile devices registered with the context manager. **What is Cortana?** Cortana is a virtual assistant developed by Microsoft, designed to provide voice-controlled assistance on various devices, including Windows computers, smartphones, and smart speakers. It utilizes natural language processing and machine learning to understand and respond to user commands and queries, making it an essential tool for technology, computing, programming, and communications tasks.

Element	Analysis for Cortana
	Does Cortana work on smartphones? Yes, Cortana is available on smartphones running on Windows, Android™, and operating systems. On these devices, Cortana can perform various tasks, such as sending text messages, making calls, setting alarms, and providing directions. **Can Cortana control smart home devices?** Cortana supports a range of smart home devices and services, allowing you to control lights, thermostats, locks, and more using voice commands. It can also integrate with popular smart home platforms, enabling seamless automation and control. **What is a Cortana notebook?** The Cortana notebook is a feature that allows you to customize Cortana's settings and preferences. It contains information about your interests, reminders, and connected accounts, helping Cortana serve you better. https://www.lenovo.com/us/en/glossary/cortana/?orgRef=https%253A%252F%252Fwww.google.com%252F (emphasis added) Windows 10: Cortana now syncs reminders Brad Sams · Feb 13, 2015 09:04 EST · HOT! 10 https://www.neowin.net/news/windows-10-cortana-now-syncs-reminders/

Element	Analysis for Cortana
	Blog / Windows / Windows 10 / Post **Cortana Can Now Sync Notifications From Your Android Phone To Your Windows 10 PC** Brad Sams MAY 19, 2016 0 https://www.thurrott.com/windows/windows-10/67251/cortana-can-now-sync-notifications-android-phone-windows-10-pc

Element	Analysis for Cortana
	OPTION ONE **Clear Personal Data Cortana Knows about you on this Device by Signing** 1 Sign out of Cortana (click on link). https://www.tenforums.com/tutorials/24514-clear-personal-data-information-cortana.html

Element	Analysis for Cortana
	7. Cross-Platform Functionality Cortana is available on multiple platforms, including Windows, Android, and iOS. This makes it easy to access Cortana from any device, regardless of the operating system. Users can also access their Cortana settings and preferences across multiple devices. https://botpenguin.com/glossary/cortana-virtual-assistant
[11.4] informing the plurality of mobile devices registered with the context manager of the context change event, wherein informing the plurality of mobile devices registered with the context manager of the context change event synchronizes a context across the plurality of mobile devices.	Cortana meets this element. **Windows 10: Cortana now syncs reminders** Brad Sams · Feb 13, 2015 09:04 EST · HOT! 10 If you have a phone and PC with Windows 10 installed, if you set a reminder, it will show up on both your phone and desktop. The same goes for places as well; if you add or remove a place on one of your devices, it will sync across all devices. However, we should point out that 'places' will sync to a Windows Phone 8 device too but 'Reminders' do not. While this functionality seems obvious, and was expected, this functionality shows the power of Microsoft's ecosystem and by using a Windows 10 phone with your Windows 10 desktop, there are tangible benefits that are not possible when using an iOS or Android device. That is, of course, unless Microsoft finds a way to bring this functionality to other platforms - and seeing how they have gone fully cross-platform for nearly everything they do, this wouldn't surprise us. https://www.neowin.net/news/windows-10-cortana-now-syncs-reminders/

Element	Analysis for Cortana
	Tip 3: Integrate Cortana Across All Your Devices One of Cortana's most powerful features is her ability to seamlessly sync across all your Windows 10 devices, from your desktop PC to your smartphone. This means you can start a task on one device and pick it up on another, with Cortana facilitating a smooth transition. For example, let's say you're browsing the web on your laptop and come across an interesting article you want to read later. You can simply tell Cortana "Remind me to read this article tonight" and the reminder will instantly appear on your phone or tablet. Or if you're out and about and remember an important task you need to do, you can bark out a quick "Cortana, add milk to my shopping list" and it'll be waiting for you when you get home. Microsoft's support forums have plenty of tips on how to optimize Cortana's cross-device capabilities, from syncing your to-do lists to sharing web pages between devices. It's a game-changer for productivity and keeping your life organized.

Element	Analysis for Cortana
	Tip 4: Leverage Cortana's Contextual Awareness One of Cortana's most impressive capabilities is her ability to understand context and tailor her responses accordingly. This means she can pick up on subtle cues in your queries and provide hyper-relevant information or take appropriate actions. For instance, let's say you're working on a project and need to look up some quick facts. You can simply say "Cortana, when was the Declaration of Independence signed?" and she'll recite the relevant information. But if you then follow up with "Who wrote it?", Cortana will automatically infer that you're still talking about the Declaration of Independence and provide the name of the author, Thomas Jefferson. Cortana's contextual awareness also extends to your location, calendar, and other personal data. So if you say "Cortana, what's the weather like today?", she'll know to give you the forecast for your current location. Or if you ask "When is my next meeting?", she'll consult your calendar and give you the details. The Ten Forums have a great discussion on how Cortana's contextual abilities can be leveraged to streamline all sorts of daily tasks. It's a capability that truly sets her apart from more rigid virtual assistants. https://itfix.org.uk/get-the-most-from-cortana-tips-for-windows-10/ Blog / Windows / Windows 10 / Post **Cortana Can Now Sync Notifications From Your Android Phone To Your Windows 10 PC** Brad Sams MAY 19, 2016 0 https://www.thurrott.com/windows/windows-10/67251/cortana-can-now-sync-notifications-android-phone-windows-10-pc

Element	Analysis for Cortana
	What is Cortana? Cortana is a virtual assistant developed by Microsoft, designed to provide voice-controlled assistance on various devices, including Windows computers, smartphones, and smart speakers. It utilizes natural language processing and machine learning to understand and respond to user commands and queries, making it an essential tool for technology, computing, programming, and communications tasks. **Does Cortana work on smartphones?** Yes, Cortana is available on smartphones running on Windows, Android™, and operating systems. On these devices, Cortana can perform various tasks, such as sending text messages, making calls, setting alarms, and providing directions. **Can Cortana control smart home devices?** Cortana supports a range of smart home devices and services, allowing you to control lights, thermostats, locks, and more using voice commands. It can also integrate with popular smart home platforms, enabling seamless automation and control. **What is a Cortana notebook?** The Cortana notebook is a feature that allows you to customize Cortana's settings and preferences. It contains information about your interests, reminders, and connected accounts, helping Cortana serve you better. https://www.lenovo.com/us/en/glossary/cortana/?orgRef=https%253A%252F%252Fwww.google.com%252F (emphasis added)

Copilot

Element	Analysis for Copilot
[11.0] A method for processing multi-modal natural language inputs, comprising:	Copilot meets this element. 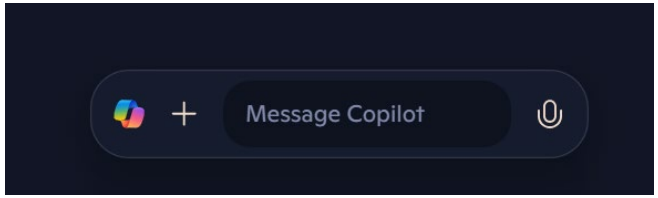 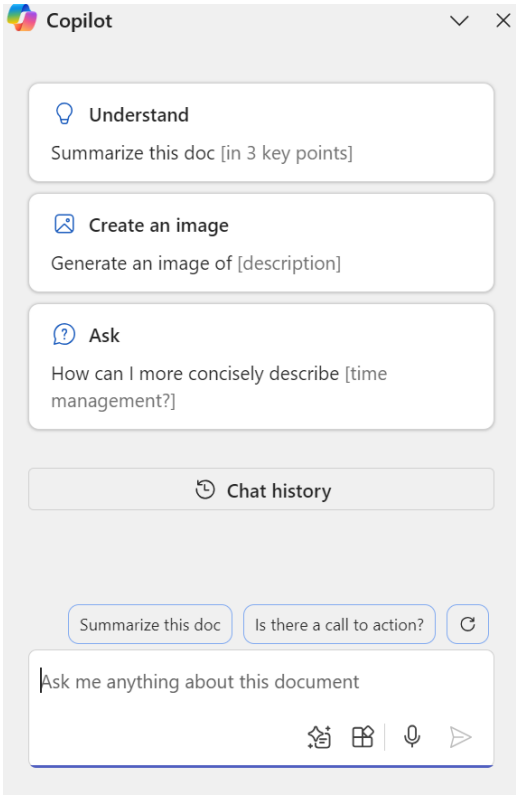

Element	Analysis for Copilot
[11.1] registering a plurality of mobile devices with a context manager in response to a registration module associated with the context manager receiving a communication from the plurality of mobile devices;	Copilot meets this element. Register your personal device on your work or school network Register your personal device (typically a phone or tablet) on your organization's network. After your device is registered, it will be able to access your organization's restricted resources. **Note:** This article uses a Windows device for demonstration purposes, but you can also register devices running iOS, Android, or macOS. https://support.microsoft.com/en-us/account-billing/register-your-personal-device-on-your-work-or-school-network-8803dd61-a613-45e3-ae6c-bd1ab25bf8a8

Element	Analysis for Copilot
	Copilot now available for the Microsoft 365 mobile app James_Bell MICROSOFT Feb 29, 2024 Today, we are excited to announce that we are rolling out the power of Copilot with commercial data protection to the Microsoft 365 mobile app, including Microsoft 365 Copilot integration in Word and PowerPoint mobile. Adding Copilot to the Microsoft 365 mobile app underlines our commitment to providing Copilot across all your experiences, helping to unleash creativity, unlock productivity, and uplevel skills everywhere you work. The new Microsoft 365 app look and feel makes it easy to find Copilot alongside your content, apps, and shortcut to create something new. https://techcommunity.microsoft.com/blog/microsoft365copilotblog/copilot-now-available-for-the-microsoft-365-mobile-app/4071014 Copilot also integrates with Power BI -- Microsoft's data visualization tool -- which can pull together data from Microsoft 365 services, Windows and associated cloud services. This enables Copilot to understand the user's role, access permissions and organizational context for personalized responses. Organizations can use information based on Copilot's read of Microsoft Graph -- a means of aggregating multiple data sources from first-party or third-party apps and services -- to inform queries and visualize data with a Copilot prompt. https://www.techtarget.com/whatis/definition/Microsoft-Copilot (emphasis added)

Element	Analysis for Copilot
	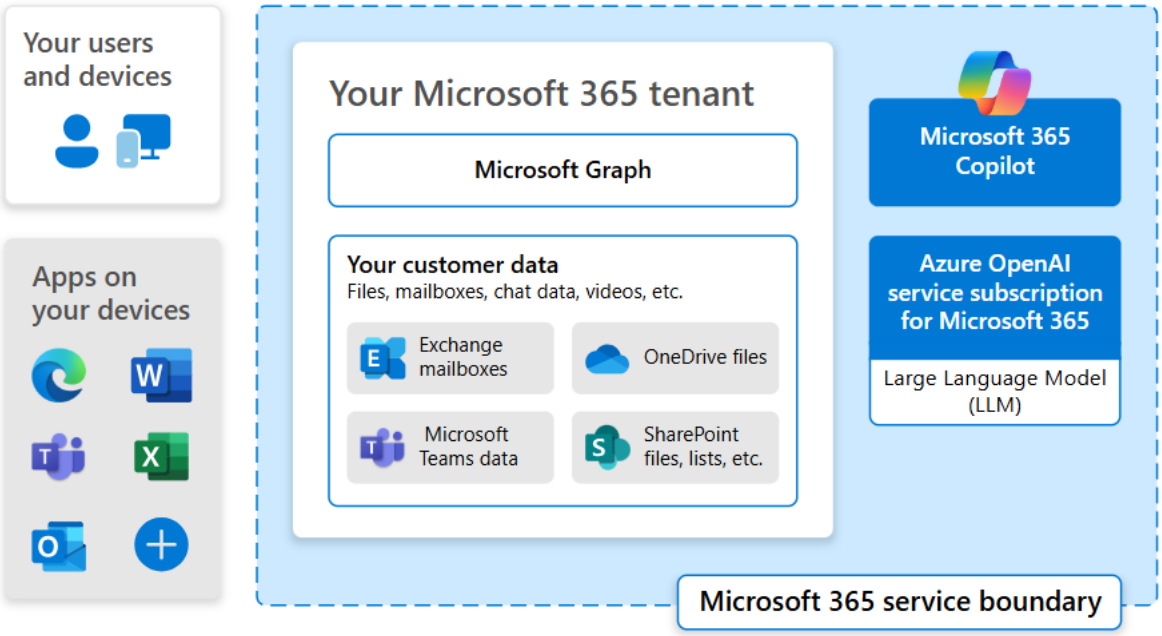 https://learn.microsoft.com/en-us/copilot/microsoft-365/microsoft-365-copilot-architecture
[11.2] subscribing the plurality of mobile devices registered with the context manager to one or more context events;	Copilot meets this element. For example, a user of Copilot can access the user's preferences and dialog history through multiple devices used by the same user.

Element	Analysis for Copilot
	Accessing Microsoft Copilot Across Devices **Desktop** Before accessing Copilot on your desktop, you must ensure that Microsoft 365 is installed and updated on all relevant devices (Windows or macOS). If you don't already have Microsoft 365 apps (such as Word, Excel, PowerPoint, Outlook, or Teams), download them from the official Microsoft 365 website. The latest updates will include Copilot features, which you can enable once your license is active. Open any Microsoft 365 app (Word, Excel, PowerPoint, Outlook, or Teams) and locate the Copilot panel on the sidebar, which will appear after installation. At this point, you can use Copilot for document drafting, retrieving and analyzing data, inbox management, and preparing meeting summaries. **Mobile** Copilot is also available through Microsoft 365 mobile apps. Download the app from the App Store (iOS) or Google Play Store (Android) and log in with your organization's Microsoft 365 account. Then, Access Copilot through the mobile app interface for on-the-go productivity, email management, and document editing. **Web** If you're working remotely or across multiple locations, you can access Copilot via the web versions of Microsoft 365 applications. Just log in to your account at office.com and open any of the supported apps. https://www.newhorizons.com/resources/blog/how-to-get-microsoft-copilot

Element	Analysis for Copilot
	Sync the enrolled device you're using for work to get the latest updates, requirements, and communications from your organization. Company Portal regularly syncs devices as long as you have a Wi-Fi connection. However, if you ever need to disconnect for an extended period of time, you can manually sync the device when you return to get any updates you missed. Syncing can also help resolve work-related downloads or other processes that are in progress or stalled. If you're experiencing slow or unusual behavior while installing or using a work app, try syncing your device to see if an update or requirement is missing. This article describes how to start a sync from the: • Company Portal app • Windows desktop taskbar or Start menu • System settings app https://learn.microsoft.com/en-us/mem/intune/user-help/sync-your-device-manually-windows

Element	Analysis for Copilot
	Let's take a look: • On devices, users open an app and enter a prompt in Copilot. • Copilot uses Microsoft Graph to access user data that's in the user's unique context. This user data includes emails, chats, and documents that the user has permission to access. There are Microsoft 365 services that help control access and security to your organization's data. These services include Restricted SharePoint Search (RSS), SharePoint Advanced Management (SAM), and Microsoft Purview. To learn more, see Microsoft 365 E3 and E5 feature comparison list for Microsoft 365 Copilot. • Copilot can't access data that the user doesn't have permission to access. In the diagram, the grayed-out data represents data that Copilot can't access. • When a user enters a prompt and Copilot responds, this **interaction** is stored in the user's Copilot chat history. Users can review and reuse their previous prompts. They can also delete their chat history. To learn more, see Data stored about user interactions with Microsoft 365 Copilot https://learn.microsoft.com/en-us/copilot/microsoft-365/microsoft-365-copilot-architecture (emphasis added) Copilot also integrates with Power BI -- Microsoft's data visualization tool -- which can pull together data from Microsoft 365 services, Windows and associated cloud services. This enables Copilot to understand the user's role, access permissions and organizational context for personalized responses. Organizations can use information based on Copilot's read of Microsoft Graph -- a means of aggregating multiple data sources from first-party or third-party apps and services -- to inform queries and visualize data with a Copilot prompt. https://www.techtarget.com/whatis/definition/Microsoft-Copilot (emphasis added)

Element	Analysis for Copilot
[11.3] receiving, at the context manager, a context input from one or more of the plurality of mobile devices registered with the context manager, wherein the context input includes a context change event; and	Copilot meets this element. For example, Copilot can receive a user input from multiple devices used by the user, and the user input can update the context for all the devices for the user. On information and belief, Copilot's orchestrator provides functions relating to receiving context input from mobile devices registered with the context manager. 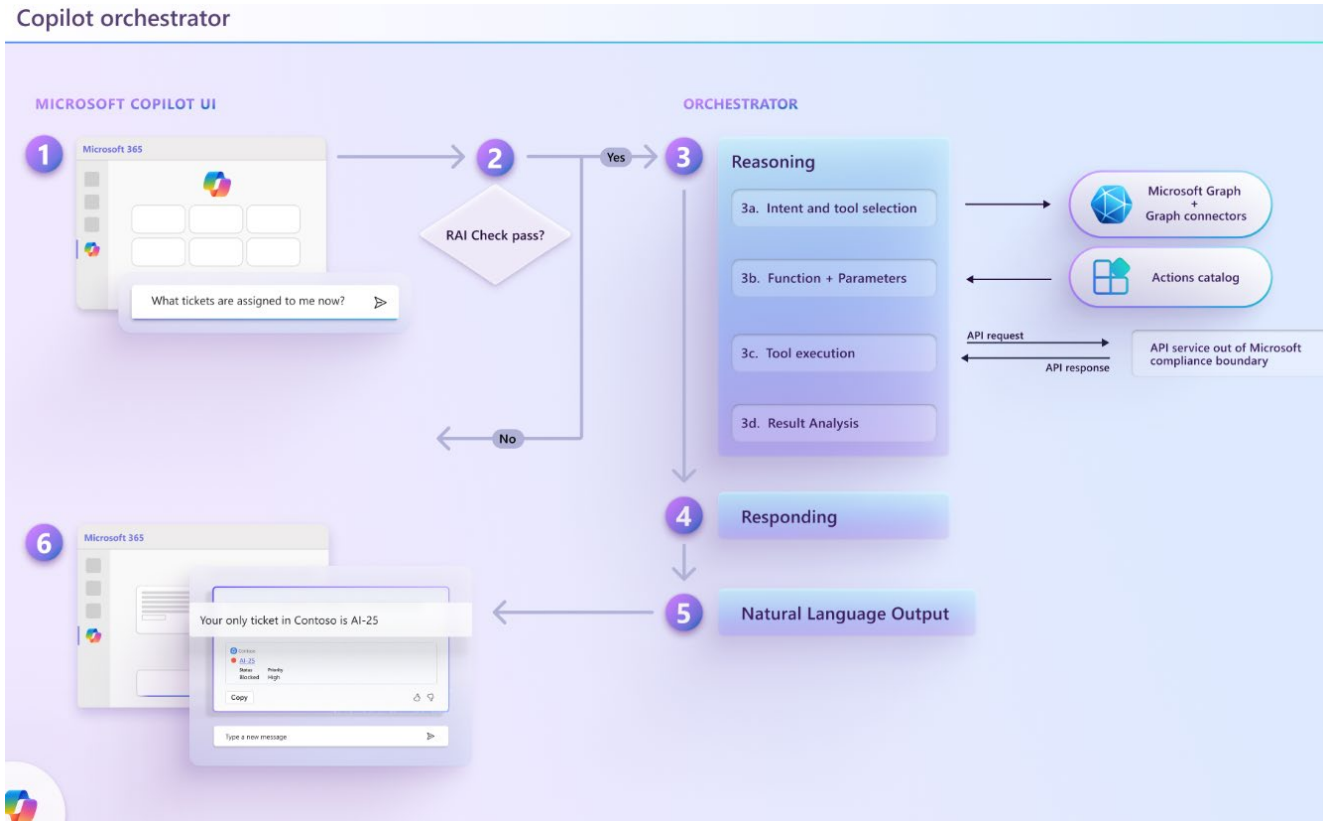

Element	Analysis for Copilot
	https://learn.microsoft.com/en-us/microsoft-365-copilot/extensibility/orchestrator
[11.4] informing the plurality of mobile devices registered with the context manager of the context change event, wherein informing the plurality of mobile devices registered with the context manager of the context change event synchronizes a context across the plurality of mobile devices.	Copilot meets this element. On information and belief, Copilot synchronizes context information across devices using Microsoft's cloud services (e.g., Microsoft 365 Apps, Azure AI) based on the user's Microsoft's account. The integration of Microsoft 365 Copilot and Microsoft 365 Apps enables Copilot experiences to take place inside individual apps, such as Word, PowerPoint, Teams, Excel, Outlook, and more. As a result of this integration, the requirements for using Microsoft 365 Copilot are nearly identical to the requirements for using Microsoft 365 Apps. https://learn.microsoft.com/th-th/copilot/microsoft-365/microsoft-365-copilot-requirements **How to pin Microsoft Copilot in the Microsoft 365 app, Microsoft Teams, and Outlook** To ensure people across your organization have easy access to Microsoft Copilot and can benefit from the security and experience updates to Copilot, we recommend you enable in-app access by pinning Microsoft Copilot. If you choose to pin Microsoft Copilot for your users, it appears in the Microsoft 365 app (web, Windows, and mobile). Copilot in other Microsoft 365 apps like Word, Excel, and PowerPoint requires a Microsoft 365 Copilot subscription. https://learn.microsoft.com/et-ee/copilot/manage

Element	Analysis for Copilot
	# Eligibility and Requirements Before using Microsoft Copilot's AI-powered capabilities, your organization must meet specific eligibility criteria and requirements. These prerequisites include: **Subscription Requirements** To access Copilot, your organization must have the proper subscription tier. Copilot is available across key Microsoft 365 applications like Word, Excel, PowerPoint, Outlook, and Teams, but only for users with the following subscription levels: ▪ Microsoft 365 E3 or E5 for enterprises. ▪ Microsoft 365 A3 or A5 for educational institutions. ▪ Microsoft 365 Business Standard or Business Premium for smaller businesses. **Authentication Prerequisites**: A Microsoft Entra ID-based account is necessary to authenticate and access files, emails, and other user data within your organization's Microsoft 365 environment, allowing Copilot to deliver personalized and secure assistance. **Cloud Integration**: To enable collaboration and real-time document sharing, you must integrate Copilot with cloud storage services like OneDrive or SharePoint. Once integrated, type a prompt in Copilot and it will retrieve the data you need from your documents, presentations, spreadsheets, and other files. **Supported Devices and Platforms**: Keep the latest versions of Microsoft 365 apps installed and up-to-date across your desktop, mobile, and web applications to access all the latest features and performance improvements.

Element	Analysis for Copilot
	Accessing Microsoft Copilot Across Devices **Desktop** Before accessing Copilot on your desktop, you must ensure that Microsoft 365 is installed and updated on all relevant devices (Windows or macOS). If you don't already have Microsoft 365 apps (such as Word, Excel, PowerPoint, Outlook, or Teams), download them from the official Microsoft 365 website. The latest updates will include Copilot features, which you can enable once your license is active. Open any Microsoft 365 app (Word, Excel, PowerPoint, Outlook, or Teams) and locate the Copilot panel on the sidebar, which will appear after installation. At this point, you can use Copilot for document drafting, retrieving and analyzing data, inbox management, and preparing meeting summaries. **Mobile** Copilot is also available through Microsoft 365 mobile apps. Download the app from the App Store (iOS) or Google Play Store (Android) and log in with your organization's Microsoft 365 account. Then, Access Copilot through the mobile app interface for on-the-go productivity, email management, and document editing. **Web** If you're working remotely or across multiple locations, you can access Copilot via the web versions of Microsoft 365 applications. Just log in to your account at office.com and open any of the supported apps. https://www.newhorizons.com/resources/blog/how-to-get-microsoft-copilot For example, after a user had the following dialog with Copilot on a PC, the dialog history became available for the user's Copilot app on a smartphone.

Element	Analysis for Copilot
	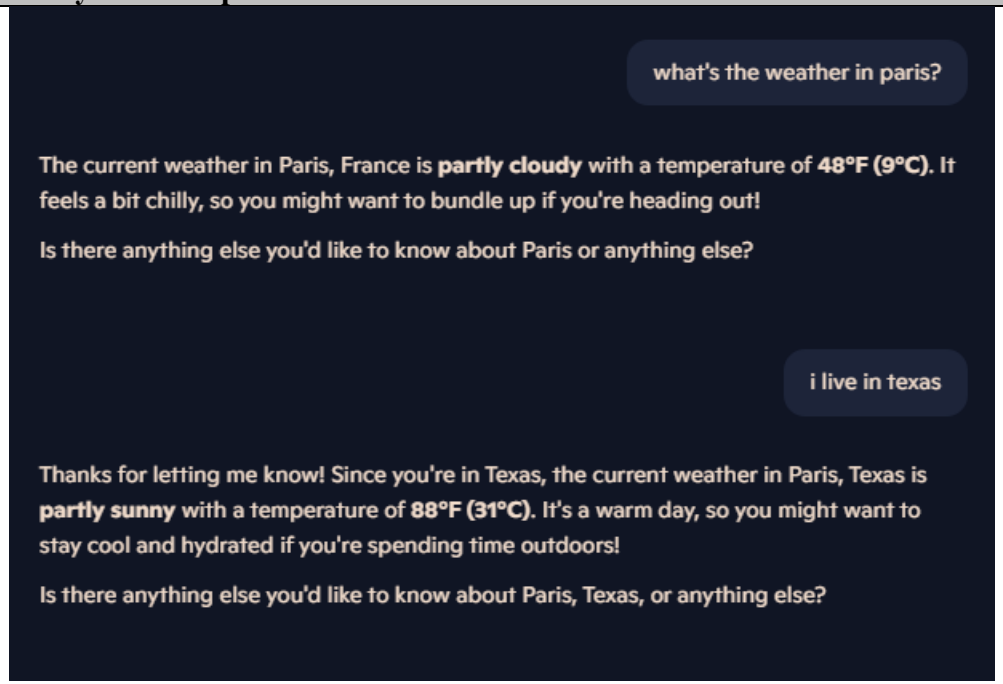

Azure AI and Azure OpenAI

Element	Analysis for Azure AI and Azure OpenAI
[11.0] A method for processing multi-modal natural language inputs, comprising:	Azure AI and Azure OpenAI meet this element. Learn / Azure / AI Services / Speech Service / **Tutorial: Voice-enable your bot** Article • 08/28/2024 • 2 contributors Feedback In this article Prerequisites Create a resource group Create resources Build an echo bot Show 11 more You can use Azure AI Speech to voice-enable a chat bot. In this tutorial, you use the Microsoft Bot Framework to create a bot that responds to what you say. You deploy your bot to Azure and register it with the Bot Framework Direct Line Speech channel. Then, you configure a sample client app for Windows that lets you speak to your bot and hear it speak back to you. https://learn.microsoft.com/en-us/azure/ai-services/speech-service/tutorial-voice-enable-your-bot-speech-sdk On information and belief, Azure AI and Azure OpenAI uses Language Understanding (LUIS) and Conversational Language Understanding technology to understand and respond to user natural language inputs.

Element	Analysis for Azure AI and Azure OpenAI
	Combine LUIS and question answering capabilities Article • 08/28/2024 • 1 contributor Feedback In this article When to use each feature Create an orchestration project Set up orchestration between Azure AI services features Change a LUIS resource to a language resource: Next steps https://learn.microsoft.com/en-us/azure/ai-services/luis/how-to/orchestration-projects **What is conversational language understanding?** Article • 08/28/2024 • 4 contributors Feedback In this article Example usage scenarios Project development lifecycle Reference documentation and code samples Responsible AI Next steps Conversational language understanding is one of the custom features offered by Azure AI Language. It is a cloud-based API service that applies machine-learning intelligence to enable you to build natural language understanding component to be used in an end-to-end conversational application. https://learn.microsoft.com/en-us/azure/ai-services/language-service/conversational-language-understanding/overview

Element	Analysis for Azure AI and Azure OpenAI
[11.1] registering a plurality of mobile devices with a context manager in response to a registration module associated with the context manager receiving a communication from the plurality of mobile devices;	Azure AI and Azure OpenAI meet this element. **Tutorial: Register an app with Microsoft Entra ID** Article • 12/04/2024 • 6 contributors Feedback **In this article** About app registration and authentication Prerequisites Public client app registration Confidential client app registration Use an app registration in code This tutorial describes how to register an application (desktop, mobile, or Web) with Microsoft Entra ID. App registration is required before an application can authenticate with Microsoft Dataverse and access business data. The included instructions in this article are specific to app registration in Microsoft Entra ID for Dataverse access. For expanded Microsoft Entra ID app registration information, see Application registration in Microsoft Entra ID. https://learn.microsoft.com/en-us/power-apps/developer/data-platform/walkthrough-register-app-azure-active-directory

Element	Analysis for Azure AI and Azure OpenAI
	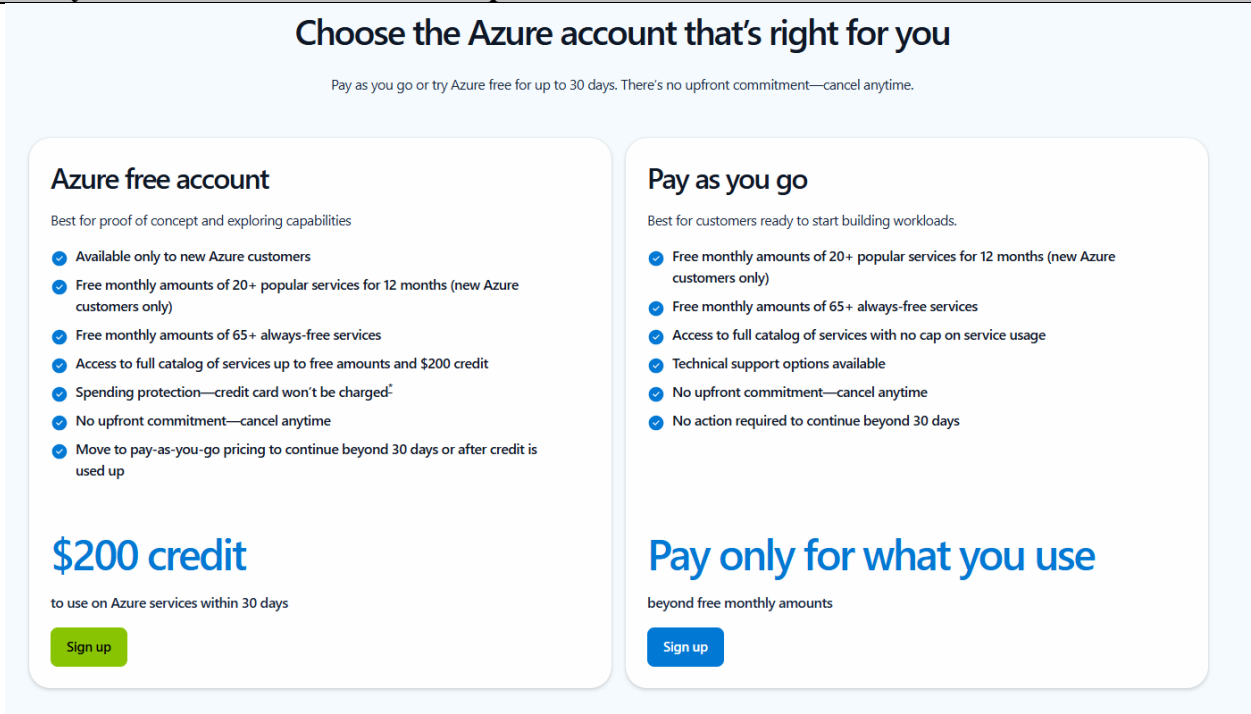 https://azure.microsoft.com/en-us/pricing/purchase-options/azure-account?icid=azurefreeaccount&WT.mc_id=javascript-00000-gllemos%2F

Element	Analysis for Azure AI and Azure OpenAI
	Create and manage device identities Article • 12/05/2024 • 2 contributors Feedback **In this article** Prerequisites Prepare certificates Register a device Retrieve device connection string Show 2 more Create a device identity for your device to connect to Azure IoT Hub. This article introduces key tasks for managing a device identity including registering the device, collecting its connection information, and then deleting or disabling a device at the end of its lifecycle.

Element	Analysis for Azure AI and Azure OpenAI
	Azure portal | Azure CLI 1. In the Azure portal, navigate to your IoT hub. 2. Select **Device management** > **Devices**. 3. Select **Add Device** to add a device in your IoT hub. 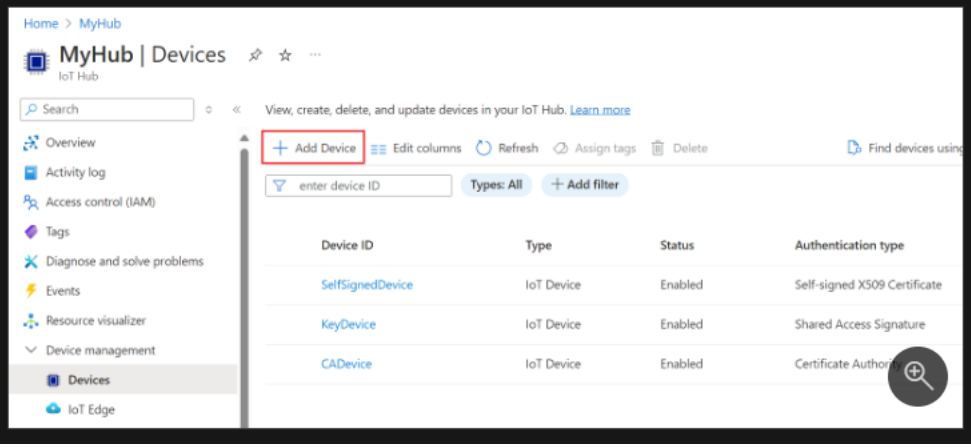

Element	Analysis for Azure AI and Azure OpenAI
	4. In **Create a device**, provide the information for your new device identity: Expand table **Parameter** / **Dependent parameter** / **Value** **Device ID** / Provide a name for your new device. **Authentication type** / Select either **Symmetric key**, **X.509 self-signed**, or **X.509 CA signed**. **Auto-generate keys** / For **Symmetric key** authentication, check this box to have IoT Hub generate keys for your device. Or, uncheck this box and provide primary and secondary keys for your device. **Primary thumbprint** and **Secondary thumbprint** / For **X.509 self-signed** authentication, provide the thumbprint hash from the device's primary and secondary certificates. https://learn.microsoft.com/en-us/azure/iot-hub/create-connect-device?tabs=portal For example, on information and belief, Azure AI uses Microsoft Bot Framework SDK to maintain dialog context of a user across multiple devices.

Element	Analysis for Azure AI and Azure OpenAI
	What is the Bot Framework SDK? Article • 11/30/2022 • 4 contributors Feedback **In this article** What is a bot? How to build a bot Next steps **APPLIES TO:** SDK v4 Microsoft Bot Framework and Azure AI Bot Service are a collection of libraries, tools, and services that let you build, test, deploy, and manage intelligent bots. The Bot Framework includes a modular and extensible SDK for building bots and connecting to AI services. With this framework, developers can create bots that use speech, understand natural language, answer questions, and more. https://learn.microsoft.com/en-us/azure/bot-service/bot-service-overview?view=azure-bot-service-4.0

Element	Analysis for Azure AI and Azure OpenAI
	Why do I need state? Maintaining state allows your bot to have more meaningful conversations by remembering certain things about a user or conversation. For example, if you've talked to a user previously, you can save previous information about them, so that you don't have to ask for it again. State also keeps data for longer than the current turn, so that your bot keeps information over the course of a multi-turn conversation. As it pertains to bots, there are a few layers to using state: the storage layer, state management (contained in the bot state in the diagram below), and state property accessors. This diagram illustrates parts of the interaction sequence between these layers, with the solid arrows representing a method call, and the dashed arrows representing the response (with or without a return value). 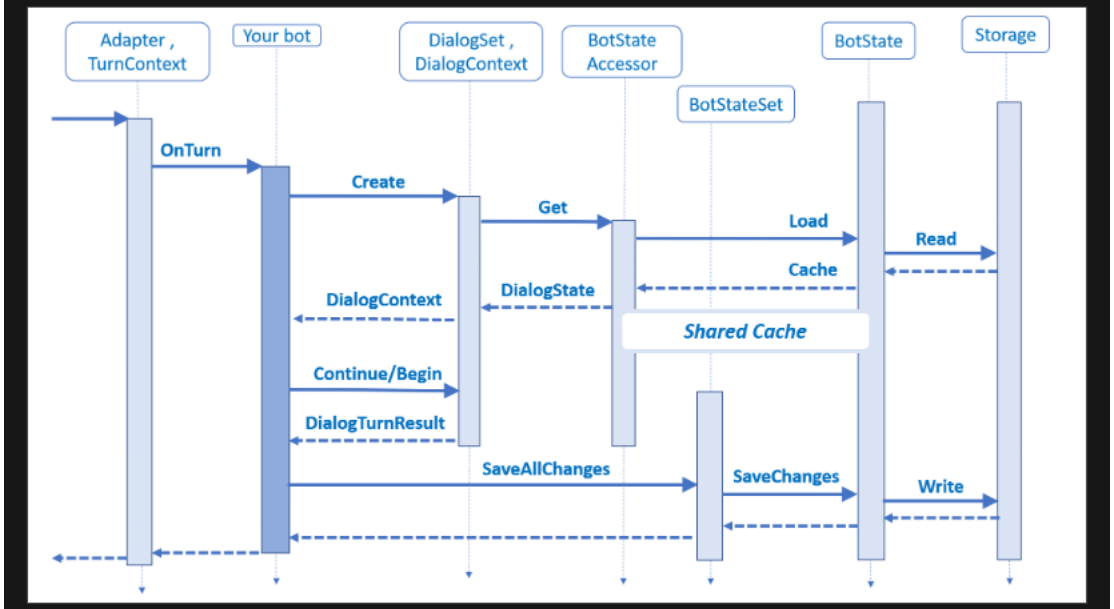 https://learn.microsoft.com/en-us/azure/bot-service/bot-builder-concept-state?view=azure-bot-service-4.0

Element	Analysis for Azure AI and Azure OpenAI
[11.2] subscribing the plurality of mobile devices registered with the context manager to one or more context events;	Azure AI and Azure OpenAI meet this element. For example, on information and belief, Azure AI and Azure OpenAI synchronize contexts of dialog history across devices.

Element	Analysis for Azure AI and Azure OpenAI
	Why do I need state? Maintaining state allows your bot to have more meaningful conversations by remembering certain things about a user or conversation. For example, if you've talked to a user previously, you can save previous information about them, so that you don't have to ask for it again. State also keeps data for longer than the current turn, so that your bot keeps information over the course of a multi-turn conversation. As it pertains to bots, there are a few layers to using state: the storage layer, state management (contained in the bot state in the diagram below), and state property accessors. This diagram illustrates parts of the interaction sequence between these layers, with the solid arrows representing a method call, and the dashed arrows representing the response (with or without a return value). 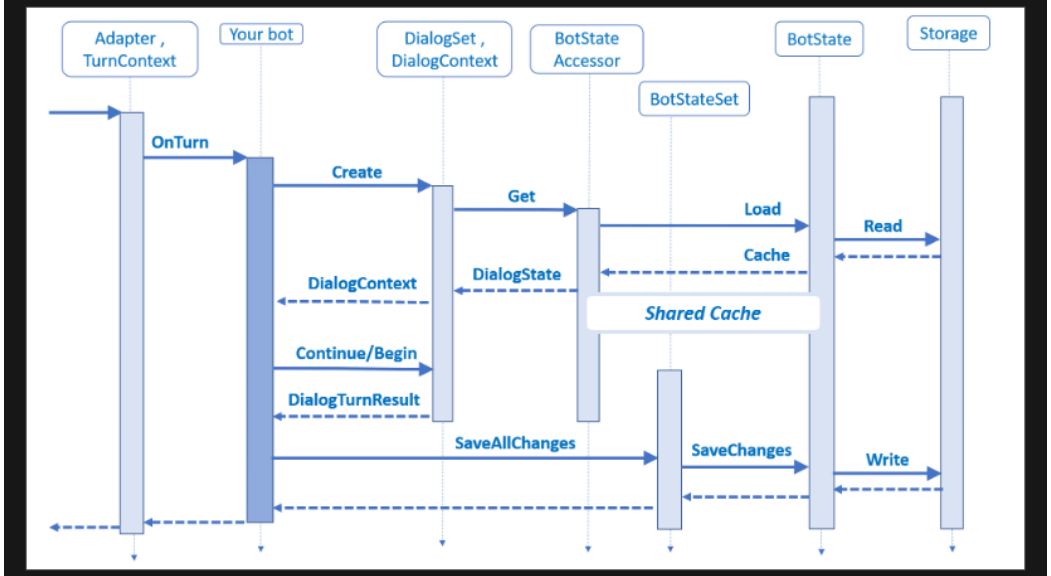 https://learn.microsoft.com/en-us/azure/bot-service/bot-builder-concept-state?view=azure-bot-service-4.0

Element	Analysis for Azure AI and Azure OpenAI

	DialogContext class
	Reference Feedback
	Package: botbuilder-dialogs
	The context for the current dialog turn with respect to a specific DialogSet.
	Remarks
	This includes the turn context, information about the dialog set, and the state of the dialog stack.
	From code outside of a dialog in the set, use DialogSet.createContext to create the dialog context. Then use the methods of the dialog context to manage the progression of dialogs in the set.
	When you implement a dialog, the dialog context is a parameter available to the various methods you override or implement.
	For example:
	JavaScript Copy
	`const dc = await dialogs.createContext(turnContext);`
	`const result = await dc.continueDialog();`
	
	https://learn.microsoft.com/en-us/javascript/api/botbuilder-dialogs/dialogcontext?view=botbuilder-ts-latest

Element	Analysis for Azure AI and Azure OpenAI
	DialogEvents class Reference Feedback Package: botbuilder-dialogs Represents the events related to the "lifecycle" of the dialog. **Properties** Expand table activityReceived — Event fired when an activity is received from the adapter (or a request to reprocess an activity.) beginDialog — Event fired by a dialog to indicate that its `beginDialog()` method has been called. cancelDialog — Event fired when a dialog is being canceled. error — Event fired when there was an exception thrown in the system. repromptDialog — Event fired when `DialogContext.repromptDialog()` is called. versionChanged — Event fired when the system has detected that deployed code has changed the execution of dialogs between turns. https://learn.microsoft.com/en-us/javascript/api/botbuilder-dialogs/dialogevents?view=botbuilder-ts-latest

Element	Analysis for Azure AI and Azure OpenAI
	DialogStateManager class Reference Feedback Package: botbuilder-dialogs The DialogStateManager manages memory scopes and path resolvers. **Remarks** MemoryScopes are named root level objects, which can exist either in the dialog context or off of turn state. Path resolvers allow for shortcut behavior for mapping things like $foo -> dialog.foo **Constructors** Expand table DialogStateManager(DialogContext, DialogStateManager Configuration) — Initializes a new instance of the DialogStateManager class. https://learn.microsoft.com/en-us/javascript/api/botbuilder-dialogs/dialogstatemanager?view=botbuilder-ts-latest

Element	Analysis for Azure AI and Azure OpenAI
	How to enable chat history? To enable chat history, deploy or redeploy your model as a web app using Azure OpenAI Studio. Once completed, activate chat history by clicking the dedicated enablement button within the Azure OpenAI Studio interface. With chat history enabled, users gain control over their interaction. In the top right corner, they can show or hide their chat history. When displayed, users can rename or delete conversations, giving full control of the chat history experience to users. Conversations are automatically ordered from newest to oldest, simplifying navigation. Each conversation is named based on the initial query, making it easy for users to locate and reference past interactions. Enabling chat history in Azure OpenAI Studio can easily provide a valuable resource for your web app users, allowing them to easily reference past conversations and queries. https://techcommunity.microsoft.com/blog/azure-ai-services-blog/enable-chat-history-on-azure-openai-studio-with-azure-cosmos-db/4051636 For example, on information and belief, Azure AI enables synchronization of contexts across devices using Azure IoT Hub.

Element	Analysis for Azure AI and Azure OpenAI
	Learn / Azure / Internet of Things / IoT Hub / **Azure IoT Hub concepts overview** Article • 06/08/2023 • 21 contributors Feedback Azure IoT Hub is a fully managed service that helps enable reliable and secure bi-directional communications between millions of devices and a solution back end. Azure IoT Hub provides many features, including: • Secure communications by using per-device security credentials and access control. • Multiple device-to-cloud and cloud-to-device hyper-scale communication options. • Queryable storage of per-device state information and meta-data. • Easy device connectivity with device libraries for the most popular languages and platforms. https://learn.microsoft.com/en-us/azure/iot-hub/iot-hub-devguide **Use IoT Hub message routing to send device-to-cloud messages to Azure services**

Element	Analysis for Azure AI and Azure OpenAI
	Routing endpoints Each IoT hub has a default routing endpoint called **messages/events** that is compatible with Event Hubs. You also can create custom endpoints that point to other services in your Azure subscription. IoT Hub currently supports the following endpoints for message routing: • Built-in endpoint • Storage containers • Service Bus queues • Service Bus topics • Event Hubs • Cosmos DB For more information about each of these endpoints, see IoT Hub endpoints. Each message is routed to all endpoints whose routing queries it matches, which means that a message can be routed to multiple endpoints. However, if a message matches multiple routes that point to the same endpoint, IoT Hub delivers the message to that endpoint only once. IoT Hub needs write access to these service endpoints for message routing to work. If you configure your endpoints through the Azure portal, the necessary permissions are added for you. If you configure your endpoints using PowerShell or the Azure CLI, you need to provide the write access permission. https://learn.microsoft.com/en-us/azure/iot-hub/iot-hub-devguide-messages-d2c On information and belief, Azure AI and Azure OpenAI enable synchronization of contexts across devices using multi-device conversation.

Element	Analysis for Azure AI and Azure OpenAI
	What is multi-device conversation? Article • 09/20/2024 • 2 contributors Feedback **In this article** Key features Use cases How it works Overview of Conversation, Host, and Participant Show 2 more Multi-device conversation makes it easy to create a speech or text conversation between multiple clients and coordinate the messages sent between them. With multi-device conversation, you can: • Connect multiple clients into the same conversation and manage the sending and receiving of messages between them. • Easily transcribe audio from each client and send the transcription to the others, with optional translation. • Easily send text messages between clients, with optional translation. You can build a feature or solution that works across an array of devices. Each device can independently send messages (either transcriptions of audio or instant messages) to all other devices.

Element	Analysis for Azure AI and Azure OpenAI
	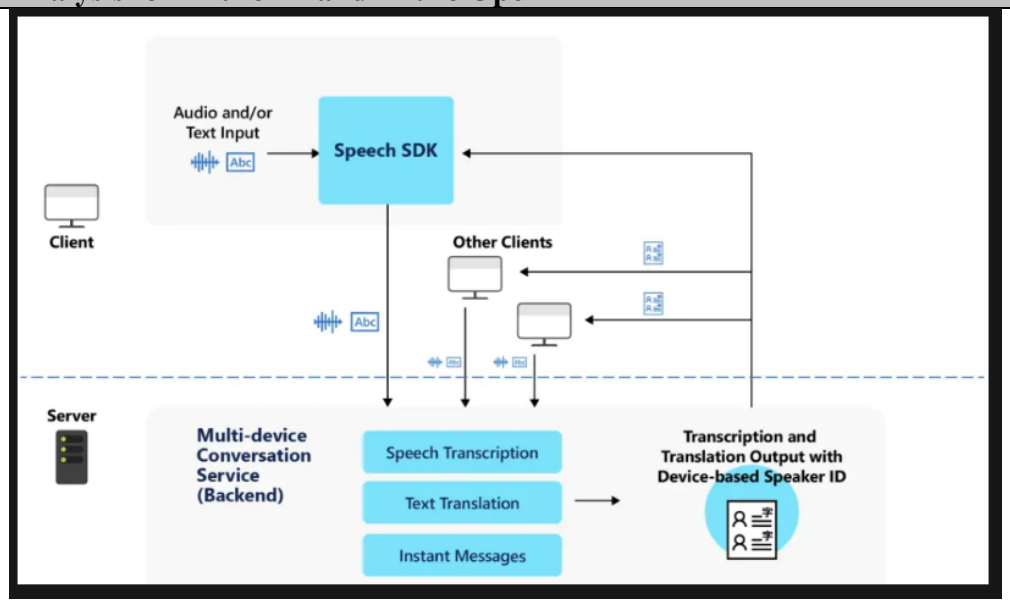 https://learn.microsoft.com/en-us/azure/ai-services/speech-service/multi-device-conversation
[11.3] receiving, at the context manager, a context input from one or more of the plurality of mobile devices registered with the context manager, wherein the context input includes a context change event; and	Azure AI and Azure OpenAI meet this element.

Element	Analysis for Azure AI and Azure OpenAI
	Create your own prompts to gather user input Article • 08/02/2024 • 11 contributors Feedback **In this article** Prerequisites About the sample code Create conversation and user objects Create property accessors Show 6 more **APPLIES TO:** SDK v4 A conversation between a bot and a user often involves asking (prompting) the user for information, parsing the user's response, and then acting on that information. Your bot should track the context of a conversation, so that it can manage its behavior and remember answers to previous questions. A bot's *state* is information it tracks to respond appropriately to incoming messages. https://learn.microsoft.com/en-us/azure/bot-service/bot-builder-primitive-prompts?view=azure-bot-service-4.0&tabs=javascript

Element	Analysis for Azure AI and Azure OpenAI
	Send device-to-cloud messages to IoT Hub IoT Hub has a built-in service endpoint that can be used by back-end services to read telemetry messages from your devices. This endpoint is compatible with Azure Event Hubs and you can use standard IoT Hub SDKs to read from this built-in endpoint. IoT Hub also supports custom endpoints that can be defined by users to send device telemetry data and events to Azure services using message routing. Learn more about these topics: • Create and read IoT Hub messages. • Read device-to-cloud messages from the built-in endpoint • Understand IoT Hub endpoints • Use IoT Hub message routing to send device-to-cloud messages to different endpoints https://learn.microsoft.com/en-us/azure/iot-hub/iot-hub-devguide-messaging

Element	Analysis for Azure AI and Azure OpenAI
	What is multi-device conversation? Article • 09/20/2024 • 2 contributors Feedback **In this article** Key features Use cases How it works Overview of Conversation, Host, and Participant Show 2 more Multi-device conversation makes it easy to create a speech or text conversation between multiple clients and coordinate the messages sent between them. With multi-device conversation, you can: • Connect multiple clients into the same conversation and manage the sending and receiving of messages between them. • Easily transcribe audio from each client and send the transcription to the others, with optional translation. • Easily send text messages between clients, with optional translation. You can build a feature or solution that works across an array of devices. Each device can independently send messages (either transcriptions of audio or instant messages) to all other devices.

Element	Analysis for Azure AI and Azure OpenAI
	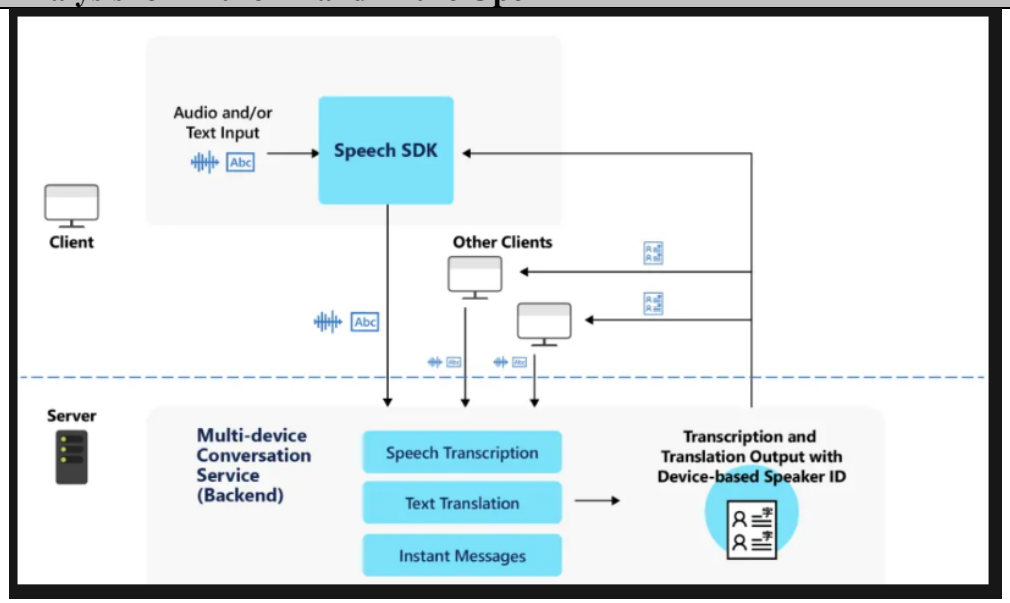 https://learn.microsoft.com/en-us/azure/ai-services/speech-service/multi-device-conversation
[11.4] informing the plurality of mobile devices registered with the context manager of the context change event, wherein informing the plurality of mobile devices registered with the context manager of the context change event synchronizes a context across the plurality of mobile devices.	Azure AI and Azure OpenAI meet this element.

Element	Analysis for Azure AI and Azure OpenAI
	Why do I need state? Maintaining state allows your bot to have more meaningful conversations by remembering certain things about a user or conversation. For example, if you've talked to a user previously, you can save previous information about them, so that you don't have to ask for it again. State also keeps data for longer than the current turn, so that your bot keeps information over the course of a multi-turn conversation. As it pertains to bots, there are a few layers to using state: the storage layer, state management (contained in the bot state in the diagram below), and state property accessors. This diagram illustrates parts of the interaction sequence between these layers, with the solid arrows representing a method call, and the dashed arrows representing the response (with or without a return value). 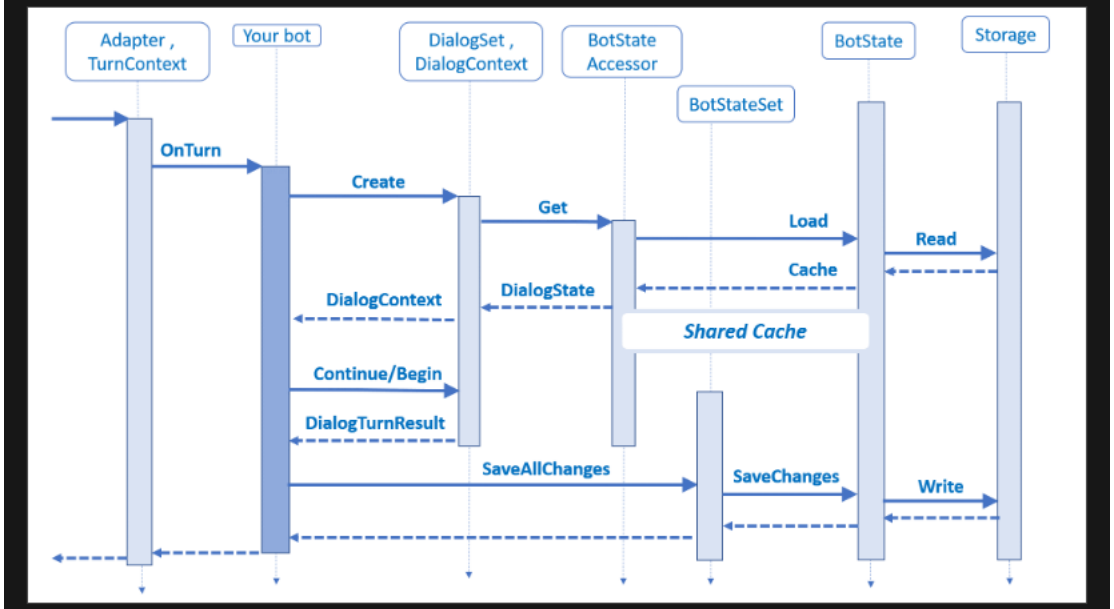 https://learn.microsoft.com/en-us/azure/bot-service/bot-builder-concept-state?view=azure-bot-service-4.0

Element	Analysis for Azure AI and Azure OpenAI
	Personalizer works by learning what your application should show to users in a given context. Context and actions are the two most important pieces of information that you pass into Personalizer. The **context** represents the information you have about the current user or the state of your system, and the **actions** are the options to be chosen from. **Context** Information for the *context* depends on each application and use case, but it typically may include information such as: • Demographic and profile information about your user. • Information extracted from HTTP headers such as user agent, or derived from HTTP information such as reverse geographic lookups based on IP addresses. • Information about the current time, such as day of the week, weekend or not, morning or afternoon, holiday season or not, etc. • Information extracted from mobile applications, such as location, movement, or battery level. • Historical aggregates of the behavior of users - such as what are the movie genres this user has viewed the most. • Information about the state of the system. Your application is responsible for loading the information about the context from the relevant databases, sensors, and systems you may have. If your context information doesn't change, you can add logic in your application to cache this information, before sending it to the Rank API. https://learn.microsoft.com/en-us/azure/ai-services/personalizer/concepts-features

Element	Analysis for Azure AI and Azure OpenAI
	Send cloud-to-device messages from IoT Hub You can send cloud-to-device messages from the IoT solution back end to your devices. **Note** Some of the features mentioned in this article, like cloud-to-device messaging, device twins, and device management, are only available in the standard tier of IoT Hub. For more information about the basic and standard/free IoT Hub tiers, see **Choose the right IoT Hub tier for your solution**. Core properties of IoT Hub messaging functionality are the reliability and durability of messages. These properties enable resilience to intermittent connectivity on the device side, and to load spikes in event processing on the cloud side. IoT Hub implements *at least once* delivery guarantees for both device-to-cloud and cloud-to-device messaging. Learn more about these topics: • Send cloud-to-device messages from an IoT hub https://learn.microsoft.com/en-us/azure/iot-hub/iot-hub-devguide-messaging

Element	Analysis for Azure AI and Azure OpenAI
	What is multi-device conversation? Article • 09/20/2024 • 2 contributors Feedback **In this article** Key features Use cases How it works Overview of Conversation, Host, and Participant Show 2 more Multi-device conversation makes it easy to create a speech or text conversation between multiple clients and coordinate the messages sent between them. With multi-device conversation, you can: • Connect multiple clients into the same conversation and manage the sending and receiving of messages between them. • Easily transcribe audio from each client and send the transcription to the others, with optional translation. • Easily send text messages between clients, with optional translation. You can build a feature or solution that works across an array of devices. Each device can independently send messages (either transcriptions of audio or instant messages) to all other devices.

Element	Analysis for Azure AI and Azure OpenAI
	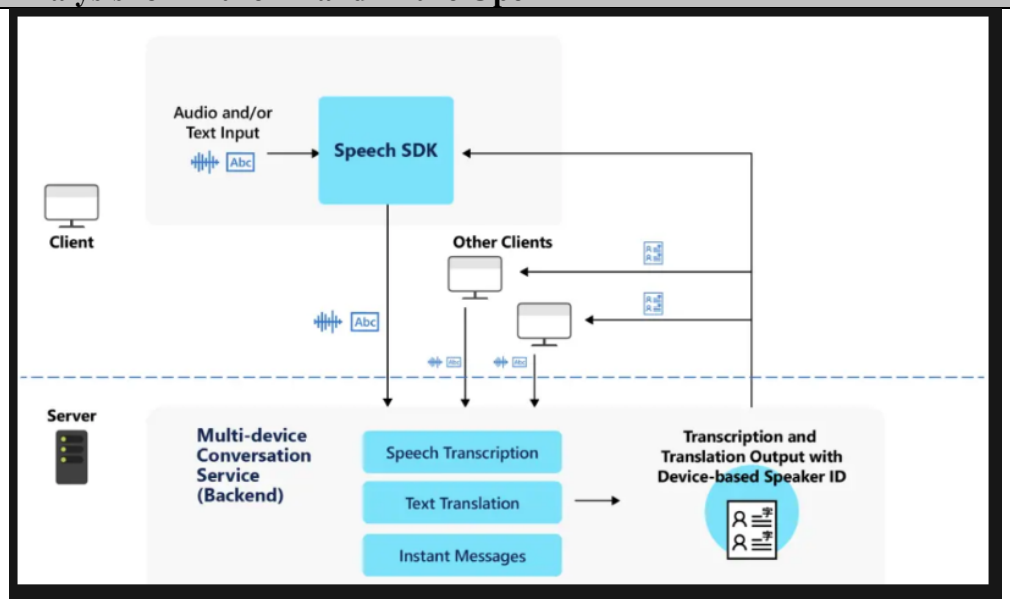 https://learn.microsoft.com/en-us/azure/ai-services/speech-service/multi-device-conversation