INTERNATIONAL STANDARD

# ISO/IEC 14443-1

First edition
2000-04-15

# Identification cards — Contactless integrated circuit(s) cards — Proximity cards —

## Part 1: Physical characteristics

*Cartes d'identification — Cartes à circuit(s) intégré(s) sans contacts — Cartes de proximité —*

*Partie 1: Caractéristiques physiques*

Reference number
ISO/IEC 14443-1:2000(E)

© ISO/IEC 2000

Licensed to EriseIP user. ANSI store order # X_1108679. Downloaded 05/13/2025. Single user license only. Copying and networking prohibited.

**PDF disclaimer**

This PDF file may contain embedded typefaces. In accordance with Adobe's licensing policy, this file may be printed or viewed but shall not be edited unless the typefaces which are embedded are licensed to and installed on the computer performing the editing. In downloading this file, parties accept therein the responsibility of not infringing Adobe's licensing policy. The ISO Central Secretariat accepts no liability in this area.

Adobe is a trademark of Adobe Systems Incorporated.

Details of the software products used to create this PDF file can be found in the General Info relative to the file; the PDF-creation parameters were optimized for printing. Every care has been taken to ensure that the file is suitable for use by ISO member bodies. In the unlikely event that a problem relating to it is found, please inform the Central Secretariat at the address given below.

© ISO/IEC 2000

All rights reserved. Unless otherwise specified, no part of this publication may be reproduced or utilized in any form or by any means, electronic or mechanical, including photocopying and microfilm, without permission in writing from either ISO at the address below or ISO's member body in the country of the requester.

ISO copyright office
Case postale 56 • CH-1211 Geneva 20
Tel. + 41 22 749 01 11
Fax + 41 22 734 10 79
E-mail copyright@iso.ch
Web www.iso.ch

Printed in Switzerland



Licensed to EriseIP user. ANSI store order # X_1108679. Downloaded 05/13/2025. Single user license only. Copying and networking prohibited.

IPR2025-01232
Apple EX1016 Page 2

## Foreword

ISO (the International Organization for Standardization) and IEC (the International Electrotechnical Commission) form the specialized system for worldwide standardization. National bodies that are members of ISO or IEC participate in the development of International Standards through technical committees established by the respective organization to deal with particular fields of technical activity. ISO and IEC technical committees collaborate in fields of mutual interest. Other international organizations, governmental and non-governmental, in liaison with ISO and IEC, also take part in the work.

International Standards are drafted in accordance with the rules given in the ISO/IEC Directives, Part 3.

In the field of information technology, ISO and IEC have established a joint technical committee, ISO/IEC JTC 1. Draft International Standards adopted by the joint technical committee are circulated to national bodies for voting. Publication as an International Standard requires approval by at least 75 % of the national bodies casting a vote.

Attention is drawn to the possibility that some of the elements of this part of ISO/IEC 14443 may be the subject of patent rights. ISO and IEC shall not be held responsible for identifying any or all such patent rights.

International Standard ISO/IEC 14443-1 was prepared by Joint Technical Committee ISO/IEC JTC 1, *Information technology*, Subcommittee SC 17, *Identification cards and related devices*.

ISO/IEC 14443 consists of the following parts, under the general title *Identification cards — Contactless integrated circuit(s) cards — Proximity cards*:

— *Part 1: Physical characteristics*

— *Part 2: Radio frequency interface power and signal interface*

— *Part 3: Initialization and anticollision*

— *Part 4: Transmission protocol*

Annexes A and B of this part of ISO/IEC 14443 are for information only.

© ISO/IEC 2000 – All rights reserved


Licensed to EriseIP user. ANSI store order # X_1108679. Downloaded 05/13/2025. Single user license only. Copying and networking prohibited.

IPR2025-01232
Apple EX1016 Page 3

## Introduction

ISO/IEC 14443 is one of a series of International Standards describing the parameters for identification cards as defined in ISO/IEC 7810 and the use of such cards for international interchange.

This part of ISO/IEC 14443 describes the physical characteristics of proximity cards.

This part of ISO/IEC 14443 does not preclude the incorporation of other standard technologies on the card, such as those referenced in the informative annex A.

Contactless card Standards cover a variety of types as embodied in ISO/IEC 10536 (Close-coupled cards), ISO/IEC 14443 (Proximity cards), ISO/IEC 15693 (Vicinity cards). These are intended for operation when very near, nearby and at a longer distance from associated coupling devices respectively.

ISO/IEC 14443 is intended to allow operation of Proximity cards in the presence of other contactless cards conforming to ISO/IEC 10536 and ISO/IEC 15693 standards.


© ISO/IEC 2000 – All rights reserved

Licensed to EriseIP user. ANSI store order # X_1108679. Downloaded 05/13/2025. Single user license only. Copying and networking prohibited.

IPR2025-01232
Apple EX1016 Page 4

# Identification cards — Contactless integrated circuit(s) cards — Proximity cards — Part 1: Physical characteristics

## 1 Scope

This part of ISO/IEC 14443 specifies the physical characteristics of proximity cards (PICC). It applies to identification cards of the card type ID-1 operating in proximity of a coupling device.

This part of ISO/IEC 14443 shall be used in conjunction with later parts of ISO/IEC 14443.

## 2 Normative references

The following normative documents contain provisions which, through reference in this text, constitute provisions of this part of ISO/IEC 14443. For dated references, subsequent amendments to, or revisions of, any of these publications do not apply. However, parties to agreements based on this part of ISO/IEC 14443 are encouraged to investigate the possibility of applying the most recent editions of the normative documents indicated below. For undated references, the latest edition of the normative document referred to applies. Members of ISO and IEC maintain registers of currently valid International Standards.

ISO/IEC 7810, *Identification cards - Physical characteristics*.

ISO/IEC 10373, *Identification cards - Test methods*.

IEC 61000-4-2, *Electromagnetic compatibility (EMC) - Part 4: Testing and measurement techniques - Section 2: Electrostatic discharge immunity test*.

## 3 Terms and definitions

For the purposes of this part of ISO/IEC 14443, the following definitions apply.

**3.1**
**integrated circuit(s) (IC)**
Electronic component(s) designed to perform processing and/or memory functions.

**3.2**
**contactless**
Pertaining to the achievement of signal exchange with and supplying power to the card without the use of galvanic elements (i.e., the absence of an ohmic path from the external interfacing equipment to the integrated circuit(s) contained within the card).

**3.3**
**contactless integrated circuit(s) card**
A card of the card type ID-1 (as specified in ISO/IEC 7810) into which integrated circuit(s) have been placed and in which communication to such integrated circuit(s) is done in a contactless manner.

© ISO/IEC 2000 – All rights reserved


Licensed to EriseIP user. ANSI store order # X_1108679. Downloaded 05/13/2025. Single user license only. Copying and networking prohibited.

**3.4**
**proximity card (PICC)**
A card of the card type ID-1 into which integrated circuit(s) and coupling means have been placed and in which communication to such integrated circuit(s) is done by inductive coupling in proximity of a coupling device.

**3.5**
**proximity coupling device (PCD)**
The reader/writer device that uses inductive coupling to provide power to the PICC and also to control the data exchange with the PICC.

# 4 Physical characteristics

## 4.1 General

The PICC shall have physical characteristics according to the requirements for the card type ID-1 specified in ISO/IEC 7810.

## 4.2 Dimensions

The nominal dimensions of the PICC shall be as for the card type ID-1 specified in ISO/IEC 7810.

## 4.3 Additional characteristics

### 4.3.1 Ultra-violet light

This part of the ISO/IEC 14443 excludes requirements for protection of the PICC against the effects of ultra-violet light levels greater than those in ordinary daylight at sea-level. Where greater protection is needed it shall be the responsibility of the card manufacturer to provide it and to state the tolerable level of ultra-violet light.

### 4.3.2 X-rays

The PICC shall continue to operate as intended after exposure of either face to medium-energy X-radiation, with energy in the range of 70 keV to 140 keV, of a cumulative dose of 0,1 Gy per year.

NOTE This corresponds to approximately twice the maximum acceptable dose to which humans may be exposed annually.

### 4.3.3 Dynamic bending stress

The PICC shall continue to operate as intended after testing in accordance with the test methods described in ISO/IEC 10373 where the maximum deflections about the short and long cards axes are $h_wA$ = 20 mm and $h_wB$ = 10 mm.

### 4.3.4 Dynamic torsional stress

The PICC shall continue to operate as intended after testing in accordance with the test methods described in ISO/IEC 10373 where the maximum angle of rotation is $\alpha = 15°$.

### 4.3.5 Alternating magnetic fields

The PICC shall continue to operate as intended after exposure, in any orientation, to a magnetic field with an average level given in the Table 1. The averaging time is 6 minutes and the maximum rms level of the magnetic field is limited to 33 times the average level.


© ISO/IEC 2000 – All rights reserved

Licensed to EriseIP user. ANSI store order # X_1108679. Downloaded 05/13/2025. Single user license only. Copying and networking prohibited.

IPR2025-01232
Apple EX1016 Page 6

**Table 1 — Magnetic Field Strength vs Frequency**

| Frequency Range (MHz) | Average Magnetic Field Strength (A/m rms) |
|---|---|
| 0,3 - 3,0 | 1,63 |
| 3,0 - 30 | 4,89/*f* |
| 30 - 300 | 0,163 |

*f* : frequency in MHz

Additionally, the PICC shall continue to operate as intended after continuous exposure to a magnetic field of an average level of 10 A/m rms at 13,56 MHz. The averaging time is 30 seconds and the maximum level of the magnetic field is limited to 12 A/m rms.

#### 4.3.6 Alternating electric field

The PICC shall continue to operate as intended after exposure, in any orientation, to an electric field with an average level given in the Table 2. The averaging time is 6 minutes and the maximum rms level of the electric field is limited to 33 times the average level.

**Table 2 — Electric Field Strength vs Frequency**

| Frequency Range (MHz) | Average Electric Field Strength (V/m rms) |
|---|---|
| 0,3 - 3,0 | 614 |
| 3,0 - 30 | 1842/*f* |
| 30 - 300 | 61,4 |

*f:* frequency in MHz

#### 4.3.7 Static electricity

The PICC shall continue to operate as intended after testing in accordance with the test methods described in ISO/IEC 10373 (referring to IEC 61000-4-2:1995), where the test voltage is 6 kV.

#### 4.3.8 Static magnetic field

The PICC shall continue to operate as intended after exposure to a static 640 kA/m magnetic field.

**WARNING — The data content of a magnetic stripe might be erased by such a field.**

#### 4.3.9 Operating temperature

The PICC shall operate as intended over an ambient temperature range of 0 °C to 50 °C.

© ISO/IEC 2000 – All rights reserved


Licensed to EriseIP user. ANSI store order # X_1108679. Downloaded 05/13/2025. Single user license only. Copying and networking prohibited.

# Annex A
(informative)

## Standards compatibility

This part of ISO/IEC 14443 does not preclude the addition of other existing card standards on the PICC, such as those listed as follows:

ISO/IEC 7811, *Identification cards - Recording technique.*

ISO/IEC 7812, *Identification cards - Identification of issuers.*

ISO/IEC 7813, *Identification cards - Financial transaction cards.*

ISO/IEC 7816, *Identification cards - Integrated circuit(s) cards with contacts.*

ISO/IEC 10536, *Identification cards - Contactless integrated circuit(s) cards - Close-coupled cards.*

ISO/IEC 15693, *Identification cards - Contactless integrated circuit(s) cards - Vicinity cards.*

**WARNING — Restrictions may apply to embossing of the PICC.**


© ISO/IEC 2000 – All rights reserved

Licensed to EriseIP user. ANSI store order # X_1108679. Downloaded 05/13/2025. Single user license only. Copying and networking prohibited.

IPR2025-01232
Apple EX1016 Page 8

# Annex B
(informative)

## Surface quality for printing

Where there is a requirement to customise the PICC after the manufacturing process by overprinting, care should be taken to ensure the areas used for printing are of sufficient quality appropriate to the printing technique or printer used.

© ISO/IEC 2000 – All rights reserved


Licensed to EriseIP user. ANSI store order # X_1108679. Downloaded 05/13/2025. Single user license only. Copying and networking prohibited.

**ICS 35.240.15**

Price based on 5 pages

© ISO/IEC 2000 – All rights reserved

Licensed to EriseIP user. ANSI store order # X_1108679. Downloaded 05/13/2025. Single user license only. Copying and networking prohibited.

INTERNATIONAL STANDARD

# ISO/IEC 14443-2

First edition
2001-07-01

# Identification cards — Contactless integrated circuit(s) cards — Proximity cards —

## Part 2: Radio frequency power and signal interface

*Cartes d'identification — Cartes à circuit(s) intégré(s) sans contact — Cartes de proximité —*

*Partie 2: Puissance de la fréquence radio et interface du signal*

Reference number
ISO/IEC 14443-2:2001(E)

© ISO/IEC 2001

IPR2025-01232
Apple EX1016 Page 11

# Contents

Page

**Foreword** ..... iv

**Introduction** ..... v

**1 Scope** ..... 1

**2 Normative references** ..... 1

**3 Terms and definitions** ..... 1

**4 Symbols and abbreviated terms** ..... 2

**5 Initial dialogue for proximity cards** ..... 3

**6 Power transfer** ..... 3
**6.1 Frequency** ..... 3
**6.2 Operating field** ..... 3

**7 Signal interface** ..... 3

**8 Communication signal interface Type A** ..... 4
**8.1 Communication PCD to PICC** ..... 4
**8.1.1 Bit rate** ..... 4
**8.1.2 Modulation** ..... 4
**8.1.3 Bit representation and coding** ..... 6
**8.2 Communication PICC to PCD** ..... 7
**8.2.1 Bit rate** ..... 7
**8.2.2 Load modulation** ..... 7
**8.2.3 Subcarrier** ..... 7
**8.2.4 Subcarrier modulation** ..... 7
**8.2.5 Bit representation and coding** ..... 7

**9 Communication signal interface Type B** ..... 8
**9.1 Communication PCD to PICC** ..... 8
**9.1.1 Bit rate** ..... 8
**9.1.2 Modulation** ..... 8
**9.1.3 Bit representation and coding** ..... 8
**9.2 Communication PICC to PCD** ..... 9
**9.2.1 Bit rate** ..... 9
**9.2.2 Load modulation** ..... 9
**9.2.3 Subcarrier** ..... 9
**9.2.4 Subcarrier modulation** ..... 9
**9.2.5 Bit representation and coding** ..... 9

**10 PICC minimal coupling zone** ..... 10

**Annex A** (informative) **Compatibility with other card standards** ..... 11

© ISO/IEC 2001 – All rights reserved



IPR2025-01232
Apple EX1016 Page 12

## Foreword

ISO (the International Organization for Standardization) and IEC (the International Electrotechnical Commission) form the specialized system for worldwide standardization. National bodies that are members of ISO or IEC participate in the development of International Standards through technical committees established by the respective organization to deal with particular fields of technical activity. ISO and IEC technical committees collaborate in fields of mutual interest. Other international organizations, governmental and non-governmental, in liaison with ISO and IEC, also take part in the work.

International Standards are drafted in accordance with the rules given in the ISO/IEC Directives, Part 3.

In the field of information technology, ISO and IEC have established a joint technical committee, ISO/IEC JTC 1. Draft International Standards adopted by the joint technical committee are circulated to national bodies for voting. Publication as an International Standard requires approval by at least 75 % of the national bodies casting a vote.

International Standard ISO/IEC 14443-2 was prepared by Joint Technical Committee ISO/IEC JTC 1, *Information technology*, Subcommittee SC 17, *Identification cards and related devices*.

ISO/IEC 14443 consists of the following parts, under the general title *Identification cards — Contactless integrated circuit(s) cards — Proximity cards*:

— *Part 1: Physical characteristics*

— *Part 2: Radio frequency power and signal interface*

— *Part 3: Initialization and anticollision*

— *Part 4: Transmission protocol*

Annex A of this part of ISO/IEC 14443 is for information only.


© ISO/IEC 2001 – All rights reserved

IPR2025-01232
Apple EX1016 Page 13

## Introduction

ISO/IEC 14443 is one of a series of International Standards describing the parameters for identification cards as defined in ISO/IEC 7810 and the use of such cards for international interchange.

This part of ISO/IEC 14443 describes the electrical characteristics of two types of contactless interface between a proximity card and a proximity coupling device. The interface includes both power and bi-directional communication.

This part of ISO/IEC 14443 does not preclude the incorporation of other standard technologies on the card, such as those referenced in Annex A.

Contactless card standards cover a variety of types as embodied in ISO/IEC 10536 (close-coupled cards), ISO/IEC 14443 (proximity cards), ISO/IEC 15693 (vicinity cards). These are intended for operation when very near, nearby and at a longer distance from associated coupling devices respectively.

The International Organization for Standardization (ISO) and International Electrotechnical Commission (IEC) draw attention to the fact that it is claimed that compliance with this part of ISO/IEC 14443 may involve the use of patents.

ISO and IEC take no position concerning the evidence, validity and scope of this patent right.

The holders of these patent rights have assured ISO and IEC that they are willing to negotiate licences under reasonable and non discriminatory terms and conditions with applicants throughout the world. In this respect, the statements of the holders of patent rights are registered with ISO and IEC. Information may be obtained from:

| | |
|---|---|
| US Patent US5359323 | FRANCE TELECOM<br>Centre National d'Etudes des Télécommunications<br>38-40 rue de Général Leclerc<br>92794 Issy-les-Molineaux<br>Cedex 9<br>France |
| WO 98/26370<br>Clause 9.1.2 (Type B) Modulation<br>WO 98/26370 A1 (pending)<br>US Patent US 5613159 (Type B)<br>Europe 0 901 670<br>French Patent App 96.15163<br>Int Pat App<br>PCT/FR97/02229<br>Innovatron Electronique / RATP<br>sub clause 9.1.2 and 9.1.3. | INNOVOTRON<br>Director of International Operations<br>Innovotrol<br>1 Rue Danton<br>75006 Paris<br>France |
| | MOTOROLA<br>Motorola ESG<br>207 route de Ferney<br>P O Box 15<br>1218 Grand-Saconnex<br>Geneva<br>Switzerland |

© ISO/IEC 2001 – All rights reserved


IPR2025-01232
Apple EX1016 Page 14

| | |
|---|---|
| | OMRON<br>Intellectual Property Department<br>Law & Intellectual Property H.Q.<br>20, Igadera Shimokaiinji<br>Nagaokakyo City<br>Kyoto 617-8510<br>Japan |
| Patent EP 0 492 569 B1<br><br>A system and method for the non-contact transmission of data. | ON-TRACK INNOVATIONS<br>Z.H.R. Industrial Zone<br>P O Box 32<br>Rosh-Pina 12000<br>Israel |
| PHO 90.508<br>EP-PS 047 35 69<br>(CH,DE,FR,GB,NL)<br>JP-A 91-211035<br>US-PS 5 345 231<br>AT-PS 395 224<br>Relates to "radio interference interface" as specified in ISO/IEC 14443-2 | PHILIPS<br>Director<br>Koninklijke Philips Electronics N.V.<br>P. O. Box 220<br>5600 AE Eindhoven<br>The Netherlands |
| Japan patent: 2705076<br>Japan Utility: 2137036<br>Europe patent: 324564<br>Europe patent: 435137<br><br>Describing the methods of returning signals from PICC, and related to the load switching technology. Both Type A and Type B are using this technology | SONY CORPORATION<br>Intellectual Property Department<br>Communiactions Systems Solutions<br>Network Co.<br>6-7-37 Kitashinagawa<br>Shinagawa-ku<br>Tokyo, 141-0001<br>Japan |

The following companies may hold patents relating to this part of ISO/IEC 14443 but have not provided details of the patents or agreed to provide licences.

| | |
|---|---|
| US 4 650 981 | WAYNE S FOLETTA<br>CA 95129, USA<br>4760 Castlewood Drive<br>San Jose, California CA 9512<br>USA |
| US Patent No. 4, 661,691 | JOHN W HALPERN<br>C/O Vincent M DeLuca<br>Rothwell, Figg, Ernst & Kurz, p.c.<br>555 Thirteenth Street, N.W.<br>Suite 701 East Tower<br>Washington, D.C. 20004 |
| WO 89 05549 A | MAGELLAN CORPORATION<br>8717 Research Drive<br>Irvine<br>CA 92618<br>USA |

Attention is drawn to the possibility that some of the elements of this part of ISO/IEC 14443 may be the subject of patent rights other than those identified above. ISO and IEC shall not be held responsible for identifying any or all such patent rights.


© ISO/IEC 2001 – All rights reserved

IPR2025-01232
Apple EX1016 Page 15

# Identification cards — Contactless integrated circuit(s) cards — Proximity cards —

## Part 2:
## Radio frequency power and signal interface

## 1 Scope

This part of ISO/IEC 14443 specifies the characteristics of the fields to be provided for power and bi-directional communication between proximity coupling devices (PCDs) and proximity cards (PICCs).

This part of ISO/IEC 14443 is intended to be used in conjunction with other parts of ISO/IEC 14443.

This part of ISO/IEC 14443 does not specify the means of generating coupling fields, nor the means of compliance with electromagnetic radiation and human exposure regulations which can vary according to country.

## 2 Normative references

The following normative documents contain provisions which, through reference in this text, constitute provisions of this part of ISO/IEC 14443. For dated references, subsequent amendments to, or revisions of, any of these publications do not apply. However, parties to agreements based on this part of ISO/IEC 14443 are encouraged to investigate the possibility of applying the most recent editions of the normative documents indicated below. For undated references, the latest edition of the normative document referred to apply. Members of ISO and IEC maintain registers of currently valid International Standards.

ISO/IEC 7816-2, *Information technology – Identification cards – Integrated circuit(s) cards with contacts – Part 2: Dimensions and location of the contacts*

ISO/IEC 10373-6, *Identification cards – Test methods – Proximity cards*

ISO/IEC 14443-1, *Identification cards – Contactless integrated circuit(s) cards – Proximity cards – Part 1: Physical characteristics*

ISO/IEC 14443-3, *Identification cards – Contactless integrated circuit(s) cards – Proximity cards – Part 3: Initialization and anticollision*

## 3 Terms and definitions

For the purposes of this part of ISO/IEC 14443, the following terms and definitions apply.

**3.1**
**bit duration**
time during which a logic level is defined, at the end of which a new bit starts

© ISO/IEC 2001 – All rights reserved


IPR2025-01232
Apple EX1016 Page 16

**3.2**
**binary phase shift keying**
phase shift keying where the phase shift is 180°, resulting in two phase state possibilities

**3.3**
**modulation index**
defined as [*a*-*b*]/[*a*+*b*] where *a* and *b* are the peak and minimum signal amplitude respectively. The value of the index may be expressed as a percentage

**3.4**
**NRZ-L**
method of bit coding whereby a logic level during a bit duration is represented by one of two defined physical states of a communication medium

**3.5**
**subcarrier**
signal of frequency *fs* used to modulate a carrier of frequency *fc*

**3.6**
**Manchester**
method of bit coding whereby a logic level during a bit duration is represented by a sequence of two defined physical states of a communication medium. The order of the physical states within the sequence defines the logical state

**3.7**
**TR0**
guard time between the end of a PCD transmission and the start of the PICC subcarrier generation

**3.8**
**TR1**
synchronization time between the start of the PICC subcarrier generation and the start of the PICC subcarrier modulation

## 4 Symbols and abbreviated terms

ASK Amplitude Shift Keying

BPSK Binary Phase Shift Keying

*fc* Frequency of operating field (carrier frequency)

*fs* Frequency of subcarrier modulation

NRZ-L Non-Return to Zero (L for level)

OOK On/Off Keying

PCD Proximity Coupling Device

PICC Proximity Card

RF Radio Frequency


© ISO/IEC 2001 – All rights reserved

IPR2025-01232
Apple EX1016 Page 17

## 5 Initial dialogue for proximity cards

The initial dialogue between the PCD and the PICC shall be conducted through the following consecutive operations:

— activation of the PICC by the RF operating field of the PCD;

— the PICC shall wait silently for a command from the PCD;

— transmission of a command by the PCD;

— transmission of a response by the PICC.

These operations shall use the RF power and signal interface specified in the following clauses.

## 6 Power transfer

The PCD shall produce an energizing RF field which couples to the PICC to transfer power and which shall be modulated for communication.

### 6.1 Frequency

The frequency *fc* of the RF operating field shall be 13,56 MHz ±7 kHz.

### 6.2 Operating field

The minimum unmodulated operating field shall be *H*min and has a value of 1,5 A/m rms.

The maximum unmodulated operating field shall be *H*max and has a value of 7,5 A/m rms.

A PICC shall operate as intended continuously between *H*min and *H*max.

A PCD shall generate a field of at least *H*min and not exceeding *H*max at manufacturer specified positions (operating volume).

In addition the PCD shall be capable of powering any single reference PICC (defined in ISO/IEC 10373-6) at manufacturer specified positions (operating volume).

The PCD shall not generate a field higher than the value specified in ISO/IEC 14443-1 (alternating magnetic field) in any possible PICC position.

Test methods for the PCD operating field are defined in ISO/IEC 10373-6.

## 7 Signal interface

Two communication signal interfaces, Type A and Type B, are described in the following clauses.

The PCD shall alternate between modulation methods when idling before detecting the presence of a PICC of Type A or Type B.

Only one communication signal interface may be active during a communication session until deactivation by the PCD or removal of the PICC. Subsequent session(s) may then proceed with either modulation method.

Figure 1 is an illustration of the concepts described in the following clauses.

© ISO/IEC 2001 – All rights reserved


IPR2025-01232
Apple EX1016 Page 18

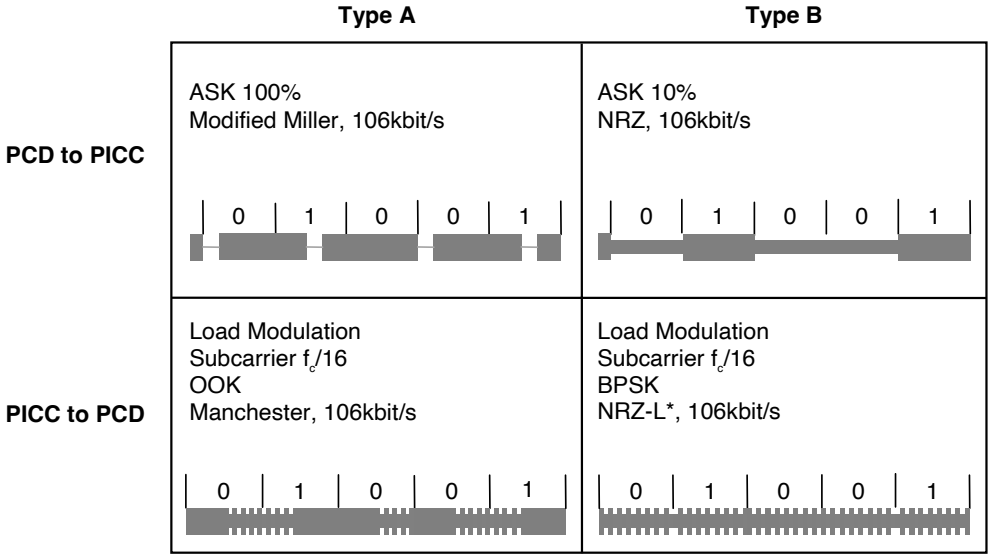


* Inversion of data is also possible

**Figure 1 — Example communication signals for Type A and Type B interfaces**

# 8 Communication signal interface Type A

## 8.1 Communication PCD to PICC

### 8.1.1 Bit rate

The bit rate for the transmission during initialization and anticollision shall be *fc*/128 (~106 kbit/s).

### 8.1.2 Modulation

Communication from PCD to PICC for a bit rate of *fc*/128 shall use the modulation principle of ASK 100% of the RF operating field to create a “Pause” as shown in figure 2.

The envelope of the PCD field shall decrease monotonically to less than 5% of its initial value $H_{INITIAL}$ and remain less than 5% for more than t2. This envelope shall comply to figure 2.


© ISO/IEC 2001 – All rights reserved

IPR2025-01232
Apple EX1016 Page 19

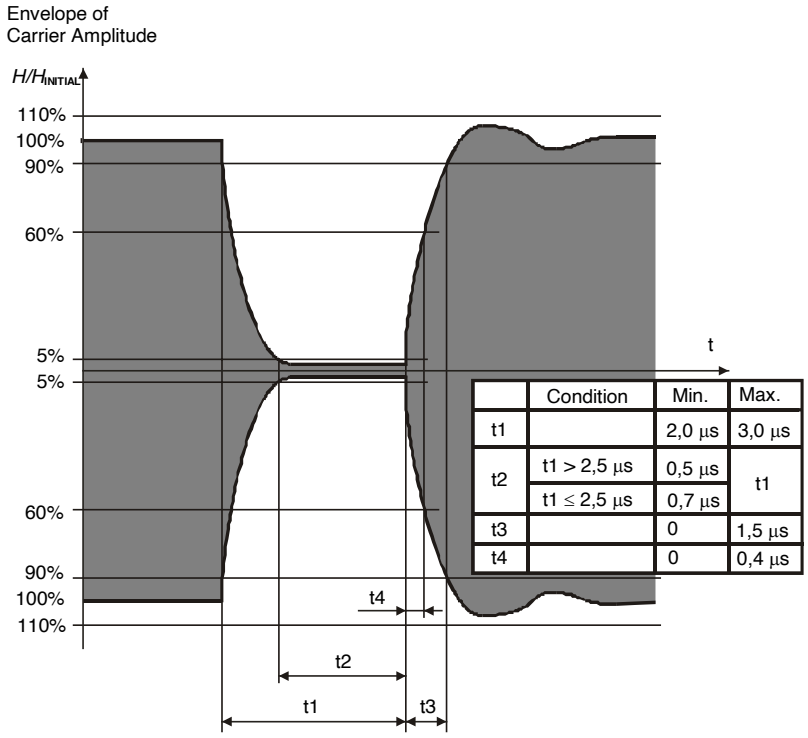


| | Condition | Min. | Max. |
|---|---|---|---|
| t1 | | 2,0 µs | 3,0 µs |
| t2 | t1 > 2,5 µs | 0,5 µs | t1 |
| | t1 ≤ 2,5 µs | 0,7 µs | |
| t3 | | 0 | 1,5 µs |
| t4 | | 0 | 0,4 µs |

**Figure 2 — Pause**

If the envelope of the PCD field does not decrease monotonically, the time between a local maximum and the time of passing the same value before the local maximum shall not exceed 0,5 µs. This shall only apply if the local maximum is greater than 5% of $H_{INITIAL}$.

Overshoots shall remain within 90% and 110% of $H_{INITIAL}$.

The PICC shall detect the ”End of Pause” after the field exceeds 5% of $H_{INITIAL}$ and before it exceeds 60% of $H_{INITIAL}$. Figure 3 shows the definition of the "End of Pause". This definition applies to all modulation envelope timings.

© ISO/IEC 2001 – All rights reserved

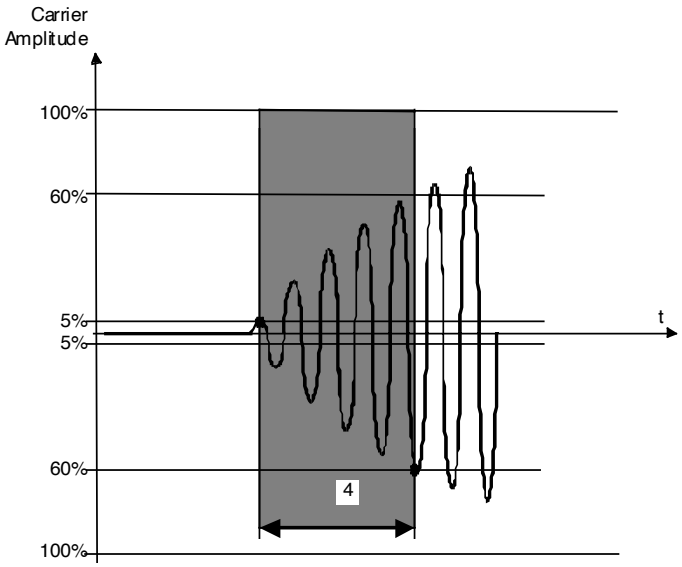


NOTE In systems designed to handle only one card at a time, t4 need not be respected.

**Figure 3 — Definition of "End of Pause"**

### 8.1.3 Bit representation and coding

The following sequences are defined:

— sequence X: after a time of half the bit duration a "Pause" shall occur.

— sequence Y: for the full bit duration no modulation shall occur.

— sequence Z: at the beginning of the bit duration a “Pause” shall occur.

The above sequences shall be used to code the following information:

— logic “1”: sequence X.

— logic “0”: sequence Y with the following two exceptions:

i) If there are two or more contiguous “0”s, sequence Z shall be used from the second “0” on.

ii) If the first bit after a “start of frame” is “0”, sequence Z shall be used to represent this and any “0”s which follow directly thereafter.

— start of communication: sequence Z.

— end of communication: logic “0" followed by sequence Y.

— no information: at least two sequences Y.


© ISO/IEC 2001 – All rights reserved

IPR2025-01232
Apple EX1016 Page 21

## 8.2 Communication PICC to PCD

### 8.2.1 Bit rate

The bit rate for the transmission during initialization and anticollision shall be *fc*/128 (~106 kbit/s).

### 8.2.2 Load modulation

The PICC shall be capable of communication to the PCD via an inductive coupling area where the carrier frequency is loaded to generate a subcarrier with frequency *fs*. The subcarrier shall be generated by switching a load in the PICC.

The load modulation amplitude shall be at least $30/H^{1,2}$ (mVpeak) when measured as described in ISO/IEC 10373-6, where *H* is the (rms) value of magnetic field strength in A/m.

### 8.2.3 Subcarrier

The frequency *fs* of the subcarrier shall be *fc*/16 (~847 kHz). Consequently, during initialization and anticollision, one bit duration is equivalent to 8 periods of the subcarrier.

### 8.2.4 Subcarrier modulation

Every bit period shall start with a defined phase relation to the subcarrier. The bit period shall start with the loaded state of the subcarrier.

The subcarrier is modulated using OOK with the sequences defined in 8.2.5.

### 8.2.5 Bit representation and coding

The following sequences are defined :

— sequence D: the carrier shall be modulated with the subcarrier for the first half (50%) of the bit duration.

— sequence E: the carrier shall be modulated with the subcarrier for the second half (50%) of the bit duration.

— sequence F: the carrier is not modulated with the subcarrier for one bit duration.

Bit coding shall be Manchester with the following definitions:

— logic “1”: sequence D

— logic “0”: sequence E

— start of communication: sequence D

— end of communication: sequence F

— no information: no subcarrier

© ISO/IEC 2001 – All rights reserved


IPR2025-01232
Apple EX1016 Page 22

# 9 Communication signal interface Type B

## 9.1 Communication PCD to PICC

### 9.1.1 Bit rate

The bit rate for the transmission during initialization and anticollision shall be nominally *fc*/128 (~106 kbit/s). Tolerance and bit boundaries are defined in ISO/IEC 14443-3.

### 9.1.2 Modulation

Communication from PCD to PICC shall use the modulation principle of ASK 10% of the RF operating field.

The modulation index shall be between 8% and 14%.

The modulation waveform shall comply to figure 4. The rising and falling edges of the modulation shall be monotonic.

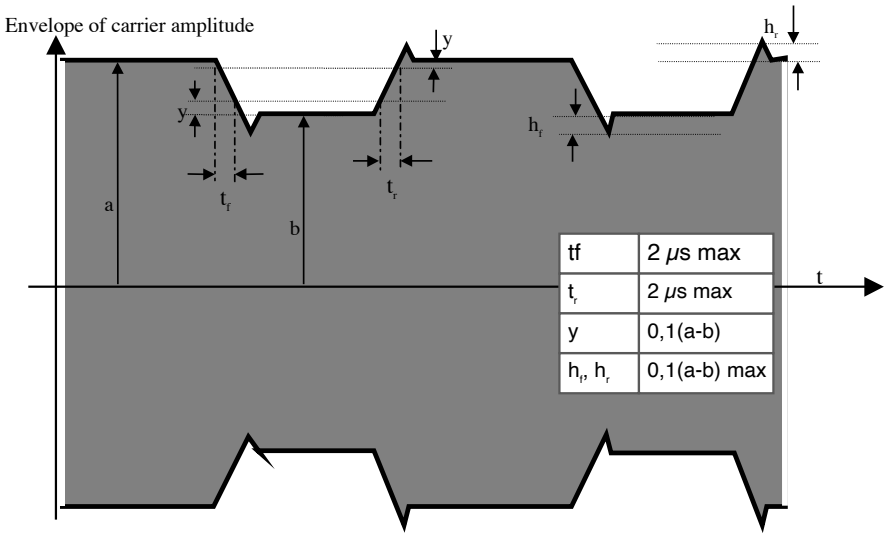


**Figure 4 — Type B modulation waveform**

### 9.1.3 Bit representation and coding

Bit coding format shall be NRZ-L with logic levels defined as follows:

— logic “1”: carrier high field amplitude (no modulation applied).

— logic “0”: carrier low field amplitude.


© ISO/IEC 2001 – All rights reserved

IPR2025-01232
Apple EX1016 Page 23

## 9.2 Communication PICC to PCD

### 9.2.1 Bit rate

The bit rate for the transmission during initialization and anticollision shall be nominally *fc*/128 (~106 kbit/s).

### 9.2.2 Load modulation

The PICC shall be capable of communication to the PCD via an inductive coupling area where the carrier frequency is loaded to generate a subcarrier with frequency *fs*. The subcarrier shall be generated by switching a load in the PICC.

The load modulation amplitude shall be at least $30/H^{1,2}$ (mVpeak) when measured as described in ISO/IEC 10373-6, where *H* is the (rms) value of magnetic field strength in A/m.

### 9.2.3 Subcarrier

The frequency *f*s of the subcarrier shall be *f*s/16 (~847 kHz). Consequently, during initialization and anticollision, one bit period is equivalent to 8 periods of the subcarrier.

The PICC shall generate a subcarrier only when data is to be transmitted.

### 9.2.4 Subcarrier modulation

The subcarrier shall be BPSK modulated, see example in figure 5. Phase shifts shall only occur at nominal positions of rising or falling edges of the subcarrier.

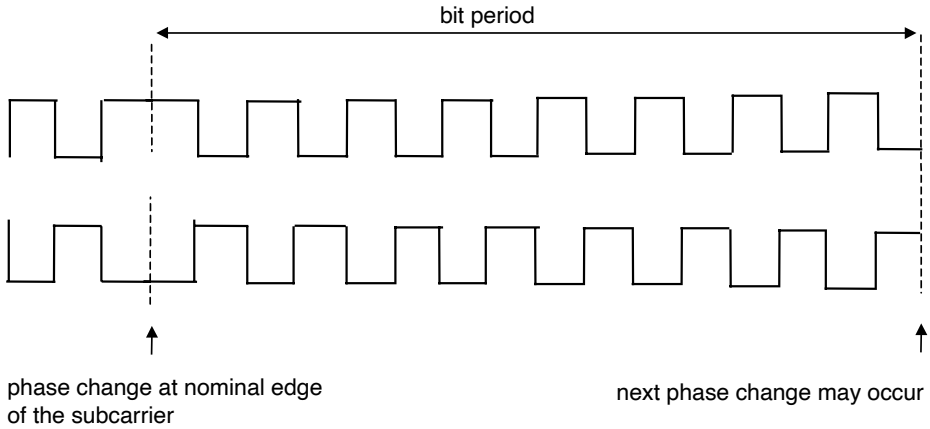


**Figure 5 — Allowed phase shifts (PICC internal subcarrier load switching)**

### 9.2.5 Bit representation and coding

Bit coding shall be NRZ-L where a change of logic level shall be denoted by a phase shift (180°) of the subcarrier.

The initial logic level for NRZ-L at the start of a PICC frame shall be established by the following sequence:

© ISO/IEC 2001 – All rights reserved


IPR2025-01232
Apple EX1016 Page 24

— After any command from the PCD a guard time TR0 shall apply in which the PICC shall not generate a subcarrier. TR0 shall be greater than 64/fs.

— The PICC shall then generate a subcarrier with no phase transition for a synchronization time TR1. This establishes a subcarrier phase reference Ø0. TR1 shall be greater than 80/fs.

— This initial phase state Ø0 of the subcarrier shall be defined as logic “1” so that the first phase transition represents a change from logic “1” to logic “0”.

— Subsequently the logic level is defined according to the subcarrier phase reference:

Ø0: represents logic "1"

Ø0 + 180°: represents logic "0".

## 10 PICC minimal coupling zone

The PICC coupling antenna may have any form and location but shall encircle the zone shown in figure 6.

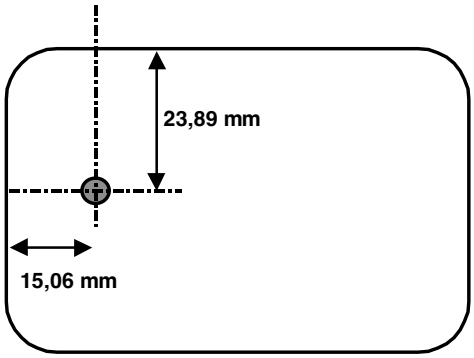


Upper and left edges are defined in ISO/IEC 7816-2. The shaded area is the zone of diameter 5,0 mm.

**Figure 6 — PICC minimal coupling zone**


© ISO/IEC 2001 – All rights reserved

IPR2025-01232
Apple EX1016 Page 25

# Annex A
(informative)

## Compatibility with other card standards

This part of ISO/IEC 14443 does not preclude the addition of other existing card standards on the PICC, such as those listed as follows:

ISO/IEC 7811 (all parts), *Identification cards – Recording technique*

ISO/IEC 7812 (all parts), *Identification cards – Identification of issuers*

ISO/IEC 7813, *Identification cards – Financial transaction cards*

ISO/IEC 7816 (all parts), *Identification cards – Integrated circuit(s) cards with contacts*

ISO/IEC 10536 (all parts), *Identification cards – Contactless integrated circuit(s) cards – Close-coupled cards*

ISO/IEC 15693 (all parts), *Identification cards – Contactless integrated circuit(s) cards – Vicinity cards*

© ISO/IEC 2001 – All rights reserved


IPR2025-01232
Apple EX1016 Page 26

**ICS 35.240.15**

Price based on 11 pages

© ISO/IEC 2001 – All rights reserved

INTERNATIONAL STANDARD

# ISO/IEC 14443-3

First edition
2001-02-01

# Identification cards — Contactless integrated circuit(s) cards — Proximity cards —

## Part 3: Initialization and anticollision

*Cartes d'identification — Cartes à circuit(s) intégré(s) sans contact — Cartes de proximité —*

*Partie 3: Initialisation et anticollision*

Reference number
ISO/IEC 14443-3:2001(E)

© ISO/IEC 2001

IPR2025-01232
Apple EX1016 Page 28

**PDF disclaimer**

This PDF file may contain embedded typefaces. In accordance with Adobe's licensing policy, this file may be printed or viewed but shall not be edited unless the typefaces which are embedded are licensed to and installed on the computer performing the editing. In downloading this file, parties accept therein the responsibility of not infringing Adobe's licensing policy. The ISO Central Secretariat accepts no liability in this area.

Adobe is a trademark of Adobe Systems Incorporated.

Details of the software products used to create this PDF file can be found in the General Info relative to the file; the PDF-creation parameters were optimized for printing. Every care has been taken to ensure that the file is suitable for use by ISO member bodies. In the unlikely event that a problem relating to it is found, please inform the Central Secretariat at the address given below.

© ISO/IEC 2001

All rights reserved. Unless otherwise specified, no part of this publication may be reproduced or utilized in any form or by any means, electronic or mechanical, including photocopying and microfilm, without permission in writing from either ISO at the address below or ISO's member body in the country of the requester.

ISO copyright office
Case postale 56 • CH-1211 Geneva 20
Tel. + 41 22 749 01 11
Fax + 41 22 749 09 47
E-mail copyright@iso.ch
Web www.iso.ch

Printed in Switzerland



© ISO/IEC 2001 – All rights reserved

IPR2025-01232
Apple EX1016 Page 29

# Contents

Page


Foreword ..... v

Introduction ..... vi

1 Scope ..... 1

2 Normative references ..... 1

3 Terms and definitions ..... 2

4 Symbols and abbreviated terms ..... 3

5 Polling ..... 5

6 Type A – Initialization and anticollision ..... 5
6.1 Frame format and timing ..... 5
6.1.1 Frame delay time ..... 6
6.1.2 Frame delay time PCD to PICC ..... 6
6.1.3 Frame delay time PICC to PCD ..... 6
6.1.4 Request Guard Time ..... 7
6.1.5 Frame formats ..... 7
6.1.6 CRC_A ..... 9
6.2 PICC states ..... 9
6.2.1 POWER-OFF State ..... 10
6.2.2 IDLE State ..... 11
6.2.3 READY State ..... 11
6.2.4 ACTIVE State ..... 11
6.2.5 HALT State ..... 11
6.2.6 READY* State ..... 11
6.2.7 ACTIVE* State ..... 12
6.3 Command set ..... 12
6.3.1 REQA and WUPA Commands ..... 12
6.3.2 ANTICOLLISION and SELECT Commands ..... 13
6.3.3 HLTA Command ..... 13
6.4 Select sequence ..... 13
6.4.1 Select sequence flowchart ..... 14
6.4.2 ATQA - Answer To Request ..... 14
6.4.3 Anticollision and Select ..... 16
6.4.4 UID contents and cascade levels ..... 19

7 Type B – Initialization and anticollision ..... 20
7.1 Character, frame format and timing ..... 20
7.1.1 Character transmission format ..... 20
7.1.2 Character separation ..... 21
7.1.3 Frame format ..... 21
7.1.4 SOF ..... 21
7.1.5 EOF ..... 22
7.1.6 Timing before the PICC SOF ..... 22
7.1.7 Timing before the PCD SOF ..... 22
7.2 CRC_B ..... 23
7.3 Anticollision sequence ..... 23
7.4 PICC states description ..... 24
7.4.1 State transition diagram ..... 25
7.4.2 General statement for state description and transitions ..... 26
7.4.3 POWER-OFF State ..... 26
7.4.4 IDLE State ..... 26


© ISO/IEC 2001 – All rights reserved


IPR2025-01232
Apple EX1016 Page 30

**7.4.5 READY-REQUESTED sub-state** ..... 26
**7.4.6 READY-DECLARED sub-state** ..... 27
**7.4.7 ACTIVE State** ..... 27
**7.4.8 HALT State** ..... 27
**7.5 Command set** ..... 28
**7.6 Anticollision response rules** ..... 28
**7.7 REQB/WUPB Command** ..... 28
**7.7.1 REQB/WUPB Command format** ..... 28
**7.7.2 Coding of Anticollision Prefix byte APf** ..... 29
**7.7.3 Coding of AFI** ..... 29
**7.7.4 Coding of PARAM** ..... 29
**7.8 Slot-MARKER Command** ..... 30
**7.8.1 Slot-MARKER Command format** ..... 30
**7.8.2 Coding of Anticollision Prefix byte APn** ..... 30
**7.9 ATQB Response** ..... 31
**7.9.1 ATQB Response format** ..... 31
**7.9.2 PUPI (Pseudo-Unique PICC Identifier)** ..... 31
**7.9.3 Application Data** ..... 31
**7.9.4 Protocol Info** ..... 32
**7.10 ATTRIB Command** ..... 33
**7.10.1 ATTRIB Command format** ..... 33
**7.10.2 Identifier** ..... 34
**7.10.3 Coding of Param 1** ..... 34
**7.10.4 Coding of Param 2** ..... 35
**7.10.5 Coding of Param 3** ..... 35
**7.10.6 Coding of Param 4** ..... 36
**7.10.7 Higher layer INF** ..... 36
**7.11 Answer to ATTRIB Command** ..... 36
**7.12 HLTB Command and Answer** ..... 37

**Annex A** (informative) **Communication example Type A** ..... 38

**Annex B** (informative) **CRC_A and CRC_B encoding** ..... 40

**Annex C** (informative) **Type A timeslot – Initialization and anticollision** ..... 44

**Annex D** (informative) **Type B - Example of Anticollision Sequence** ..... 47


© ISO/IEC 2001 – All rights reserved

IPR2025-01232
Apple EX1016 Page 31

# Foreword

ISO (the International Organization for Standardization) and IEC (the International Electrotechnical Commission) form the specialized system for worldwide standardization. National bodies that are members of ISO or IEC participate in the development of International Standards through technical committees established by the respective organization to deal with particular fields of technical activity. ISO and IEC technical committees collaborate in fields of mutual interest. Other international organizations, governmental and non-governmental, in liaison with ISO and IEC, also take part in the work.

International Standards are drafted in accordance with the rules given in the ISO/IEC Directives, Part 3.

In the field of information technology, ISO and IEC have established a joint technical committee, ISO/IEC JTC 1. Draft International Standards adopted by the joint technical committee are circulated to national bodies for voting. Publication as an International Standard requires approval by at least 75 % of the national bodies casting a vote.

International Standard ISO/IEC 14443-3 was prepared by Joint Technical Committee ISO/IEC JTC 1, *Information technology*, Subcommittee SC 17, *Identification cards and related devices*.

ISO/IEC 14443 consists of the following parts, under the general title *Identification cards — Contactless integrated circuit(s) cards — Proximity cards*:

— *Part 1: Physical characteristics*

— *Part 2: Radio frequency power and signal interface*

— *Part 3: Initialization and anticollision*

— *Part 4: Transmission protocol*

Annexes A, B, C and D of this part of ISO/IEC 14443 are for information only.

© ISO/IEC 2001 – All rights reserved


IPR2025-01232
Apple EX1016 Page 32

# Introduction

ISO/IEC 14443 is one of a series of International Standards describing the parameters for identification cards as defined in ISO/IEC 7810, and the use of such cards for international interchange.

This part of ISO/IEC 14443 describes polling for proximity cards entering the field of a proximity coupling device, the byte format and framing, the initial Request and Answer to Request command content, methods to detect and communicate with one proximity card among several proximity cards (anticollision) and other parameters required to initialize communications between a proximity card and a proximity coupling device. Protocols and commands used by higher layers and by applications and which are used after the initial phase are described in ISO/IEC 14443-4.

ISO/IEC 14443 is intended to allow operation of proximity cards in the presence of other contactless cards conforming to ISO/IEC 10536 and ISO/IEC 15693.

The International Organization for Standardization (ISO) and International Electrotechnical Commission (IEC) draw attention to the fact that it is claimed that compliance with this part of ISO/IEC 14443 may involve the use of patents.

ISO and IEC take no position concerning the evidence, validity and scope of this patent right.

The holders of these patent rights have assured ISO and IEC that they are willing to negotiate licences under reasonable and non discriminatory terms and conditions with applicants throughout the world. In this respect, the statements of the holders of patent rights are registered with the ISO and IEC. Information may be obtained from:

| Patent holder | Details |
|---|---|
| **CASIO**<br>General Manager<br>Intellectuall property Centre<br>Casio Computer Co. Ltd<br>Hamura R & D Center<br>2-1 Sakae-cho 3Chome<br>Hamura-Shi<br>Tokyo 205-8555<br>Japan | US Patent 4,810,862 and JP 2564480 “System for judging propriety of use of an integrated circuit card with a card terminal”, issued on March 07, 1989<br><br>Japan Patent No. 2564480<br>US Patent No. 4810862<br>British Patent No. 209092<br>German Patent No. P 3689089.8<br>French Patent No. 209092<br>Swiss Patent No. 209092<br>Canadian Patent No. 1301891<br>Netherlands Patent No. 209092<br>Italian Patent No. 209092<br>Austrian Patent No. 209092<br>Australian Patent No. 568457<br>Belgian Patent No. 209092<br>Swedish Patent 86109530.5<br>EPO Patent No. 209092 |
| **FRANCE TELECOM**<br>Branch Développement<br>Centre National d’Etudes des Télécommunications<br>38-40 rue de Général Leclerc<br>92794 Issy-les-Molineaux<br>Cedex 9<br>France | US Patent US5359323 |


© ISO/IEC 2001 – All rights reserved

IPR2025-01232
Apple EX1016 Page 33

| | |
|---|---|
| **INNOVOTRON**<br>Philippe le Clech<br>Director of International Operations<br>Innovotrol<br>1 Rue Danton<br>75006 Paris<br>France | WO 9936877A1<br>Europe 0 901 670<br>French Patent App 97.02501<br>Int Pat App<br>PCT/FR98/00132<br>Innovatron Electronique / RATP<br>sub clause 7.3, 7.6 and 7.7<br>French Patent App 98.00383<br>Int Pat App<br>PCT/FR99/00079<br>Innovatron Electronique / RATP<br>sub clause 7.3, 7.4.5, 7.6, 7.7, 7.8 |
| **MOTOROLA**<br>Motorola ESG<br>207 route de Ferney<br>P O Box 15<br>1218 Grand-Saconnex<br>Geneva<br>Switzerland | Details not available. |
| **ON-TRACK INNOVATIONS**<br>Z.H.R. Industrial Zone<br>P O Box 32<br>Rosh-Pina 12000<br>Israel | Patent EP 0 492 569 B1<br><br>A system and method for the non-contact transmission of data. |
| **PHILIPS**<br>Director Philips Corporate Intellectual Property<br>Koninklijke Philips Electronics N.V.<br>P. O. Box 220<br>5600 AE Eindhoven<br>The Netherlands | PHO 94.520<br>EP-PS 066 9591<br>(BE,CH,DE,DK,ES,FR,GB,IT,NL,SE)<br>AT-PS 401 127<br>Related to “anticollision” as specified in ISO/IEC 14443-3 |

The following companies may hold patents relating to this part of ISO/IEC 14443 but have not provided details of the patents or agreed to provide licences.

| **Patent holder** | **Details** |
|---|---|
| **WAYNE S FOLETTA**<br>4760 Castlewood Drive<br>San Jose, California CA 9512<br>USA | US 4 650 981 |
| **JOHN W HALPERN**<br>C/O Vincent M DeLuca<br>Rothwell, Figg, Ernst & Kurz, p.c.<br>555 Thirteenth Street, N.W.<br>Suite 701 East Tower<br>Washington, D.C. 20004 | US Patent No. 4, 661,691 |
| **MAGELLAN CORPORATION**<br>8717 Research Drive<br>Irvine<br>CA 92618<br>USA | WO 89 05549 A |

Attention is drawn to the possibility that some of the elements of this part of ISO/IEC 14443 may be the subject of patent rights other than those identified above. ISO and IEC shall not be held responsible for identifying any or all such patent rights.

© ISO/IEC 2001 – All rights reserved


IPR2025-01232
Apple EX1016 Page 34

# Identification cards — Contactless integrated circuit(s) cards — Proximity cards —

## Part 3: Initialization and anticollision

## 1 Scope

This part of ISO/IEC 14443 describes:

— polling for proximity cards (PICCs) entering the field of a proximity coupling device (PCD);

— the byte format, the frames and timing used during the initial phase of communication between PCDs and PICCs;

— the initial Request and Answer to Request command content;

— methods to detect and communicate with one PICC among several PICCs (anticollision);

— other parameters required to initialize communications between a PICC and PCD;

— optional means to ease and speed up the selection of one PICC among several PICCs based on application criteria.

Protocol and commands used by higher layers and by applications and which are used after the initial phase are described in ISO/IEC 14443-4.

This part of ISO/IEC 14443 is applicable to PICCs of Type A and of Type B (as described in ISO/IEC 14443-2).

NOTE Part of the timing of data communication is defined in ISO/IEC 14443-2.

## 2 Normative references

The following normative documents contain provisions which, through reference in this text, constitute provisions of this part of ISO/IEC 14443. For dated references, subsequent amendments to, or revisions of, any of these publications do not apply. However, parties to agreements based on this part of ISO/IEC 14443 are encouraged to investigate the possibility of applying the most recent editions of the normative documents indicated below. For undated references, the latest edition of the normative document referred to applies. Members of ISO and IEC maintain registers of currently valid International Standards.

ISO/IEC 7816-3:1997, *Information technology — Identification cards — Integrated circuit(s) cards with contacts — Part 3: Electronic signals and transmission protocols*.

ISO/IEC 7816-5, *Identification cards — Integrated circuit(s) cards with contacts — Part 5: Numbering system and registration procedure for application identifiers*.

ISO/IEC 7816-6:1996/Amd.1:2000, *Identification cards — Integrated circuit(s) cards with contacts — Part 6: Interindustry data elements — Amendment 1: IC manufacturer registration*.

© ISO/IEC 2001 – All rights reserved


IPR2025-01232
Apple EX1016 Page 36

ISO/IEC 13239, *Information technology — Telecommunications and information exchange between systems — High-level data link control (HDLC) procedures*.

ISO/IEC 14443-2, *Identification cards — Contactless integrated circuit(s) cards — Proximity cards — Part 2: Radio frequency power and signal interface*.

ISO/IEC 14443-4, *Identification cards — Contactless integrated circuit(s) cards — Proximity cards — Part 4: Transmission protocol*.

ITU-T X.25, *Interface between Data Terminal Equipment (DTE) and Data Circuit-terminating Equipment (DCE) for terminals operating in the packet mode and connected to public data networks by dedicated circuit*.

ITU-T V.41, *Code-independent error-control system*.

ITU-T V.42, *Error-correcting procedures for DCEs using asynchronous-to-synchronous conversion*.

## 3 Terms and definitions

For the purposes of this part of ISO/IEC 14443, the terms and definitions given in ISO/IEC 14443-2, ISO/IEC 7816-3 and the following apply.

**3.1**
**anticollision loop**
algorithm used to prepare for dialogue between PCD and one or more PICCs out of the total number of PICCs responding to a request command

**3.2**
**bit collision detection protocol**
anticollision method for PICCs of Type A, employing collision detection at bit level within a frame

**3.3**
**byte**
8 bits of data designated b8 to b1, from the most significant bit (MSB, b8) to the least significant bit (LSB, b1)

**3.4**
**collision**
transmission by two PICCs in the same PCD energizing field and during the same time period, such that the PCD is unable to distinguish from which PICC the data originated

**3.5**
**elementary time unit**
**etu**
for this part of ISO/IEC 14443, one etu is defined as 1 etu = 128/*fc* (i.e. 9,4 µs nominal)

**3.6**
**frame**
sequence of data bits and optional error detection bits, with frame delimiters at start and end

**3.7**
**higher layer protocol**
protocol layer (not described in this part of ISO/IEC 14443) that makes use of the protocol layer defined in this part of ISO/IEC 14443 to transfer information belonging to the application or higher layers of protocol that is not described in this part of ISO/IEC 14443

**3.8**
**timeslot protocol**
method whereby a PCD establishes logical channels with one or more PICCs of Type B, which makes use of timeslot allocation for PICC response


© ISO/IEC 2001 – All rights reserved

IPR2025-01232
Apple EX1016 Page 37

**3.9**
**request command**
command requesting PICC of the appropriate type to respond if they are available for initialization

## 4 Symbols and abbreviated terms

For the purposes of this part of ISO/IEC 14443, the following abbreviations are used:

| | |
|---|---|
| ADC | Application Data Coding, Type B |
| AFI | Application Family Identifier. Card preselection criteria by application, Type B |
| APf | Anticollision Prefix f, used in REQB/WUPB, Type B |
| APn | Anticollision Prefix n, used in Slot-MARKER Command, Type B |
| ATQA | Answer To Request, Type A |
| ATQB | Answer To Request, Type B |
| ATTRIB | PICC selection command, Type B |
| BCC | UID CLn check byte, calculated as exclusive-or over the 4 previous bytes, Type A |
| CID | Card IDentifier |
| CLn | Cascade Level n, Type A |
| CT | Cascade Tag, Type A |
| CRC_A | Cyclic Redundancy Check error detection code A |
| CRC_B | Cyclic Redundancy Check error detection code B |
| E | End of communication, Type A |
| EGT | Extra Guard Time, Type B |
| EOF | End Of Frame, Type B |
| etu | Elementary time unit. |
| FDT | Frame Delay Time, Type A |
| *fc* | Carrier frequency |
| FO | Frame Option |
| *fs* | Subcarrier frequency |
| FWI | Frame Waiting time Integer |
| FWT | Frame Waiting Time |
| HLTA | Halt Command, Type A |
| HLTB | Halt Command, Type B |

© ISO/IEC 2001 – All rights reserved


IPR2025-01232
Apple EX1016 Page 38

| | |
|---|---|
| ID | IDentification number, Type A |
| INF | INFormation field belonging to higher layer, Type B |
| LSB | Least Significant Bit |
| MBL | Maximum Buffer Length, Type B |
| MBLI | Maximum Buffer Length Index, Type B |
| MSB | Most Significant Bit |
| N | Number of anticollision slots or PICC response probability in each slot, Type B |
| n | Variable integer value as defined in the specific clause |
| NAD | Node ADdress |
| NVB | Number of Valid Bits, Type A |
| P | Odd Parity bit, Type A |
| PCD | Proximity Coupling Device |
| PICC | Proximity Card |
| PUPI | Pseudo-Unique PICC Identifier, Type B |
| R | Slot number chosen by the PICC during the anticollision sequence, Type B |
| REQA | Request Command, Type A |
| REQB | Request Command, Type B |
| RFU | Reserved for Future ISO/IEC Use |
| S | Start of communication, Type A |
| SAK | Select AcKnowledge, Type A |
| SEL | SELect code, Type A |
| SELECT | Select Command, Type A |
| SOF | Start Of Frame, Type B |
| TR0 | Guard Time as defined in ISO/IEC 14443-2, Type B |
| TR1 | Synchronization Time as defined in ISO/IEC 14443-2, Type B |
| UID | Unique Identifier, Type A |
| uid*n* | Byte number *n* of Unique IDentifier, $n \geq 0$ |
| WUPA | Wake-UP Command, Type A |
| WUPB | Wake-UP Command, Type B |


© ISO/IEC 2001 – All rights reserved

IPR2025-01232
Apple EX1016 Page 39

For the purposes of this part of ISO/IEC 14443, the following notation applies:

— (xxxxx)b Data bit representation;

— ‘XY’ Hexadecimal notation, equal to XY to the base 16.

## 5 Polling

In order to detect PICCs which are in the operating field, a PCD shall send repeated Request commands. The PCD shall send REQA and REQB described herein in any sequence and in addition may send other commands as described in Annex C.

When a PICC is exposed to an unmodulated operating field (see ISO/IEC 14443-2) it shall be able to accept a request within 5 ms.

EXAMPLE 1 When a PICC Type A receives any Type B command it shall be able to accept a REQA within 5 ms of unmodulated operating field.

EXAMPLE 2 When a PICC Type B receives any Type A command it shall be able to accept a REQB within 5 ms of unmodulated operating field.

## 6 Type A – Initialization and anticollision

This section describes the initialization and collision detection protocol applicable for PICCs of Type A.

The PCD shall be designed to detect a collision that occurs when at least two PICCs simultaneously transmit bit patterns with one or more bit positions in which at least two PICCs transmit complementary values. In this case the bit patterns merge and the carrier is modulated with the subcarrier for the whole (100%) bit duration (see ISO/IEC 14443-2).

### 6.1 Frame format and timing

This section defines the frame format and timing used during communication initialization and anticollision. For bit representation and coding refer to ISO/IEC 14443-2.

Frames shall be transferred in pairs, PCD to PICC followed by PICC to PCD, using the sequence:

— PCD frame:

  — PCD start of communication

  — information and, where required, error detection bits sent by the PCD

  — PCD end of communication

— Frame delay time PCD to PICC

— PICC frame:

  — PICC start of communication

  — information and, where required, error detection bits sent by the PICC

  — PICC end of communication

— Frame delay time PICC to PCD

The frame delay time (FDT) from PCD to PICC overlaps the PCD end of communication.

© ISO/IEC 2001 – All rights reserved


IPR2025-01232
Apple EX1016 Page 40

### 6.1.1 Frame delay time

The frame delay time FDT is defined as the time between two frames transmitted in opposite directions.

### 6.1.2 Frame delay time PCD to PICC

This is the time between the end of the last pause transmitted by the PCD and the first modulation edge within the start bit transmitted by the PICC and shall respect the timing defined in Figure 1, where *n* is an integer value.

Table 1 defines values for *n* and FDT depending on the command type and the logic state of the last transmitted data bit in this command.

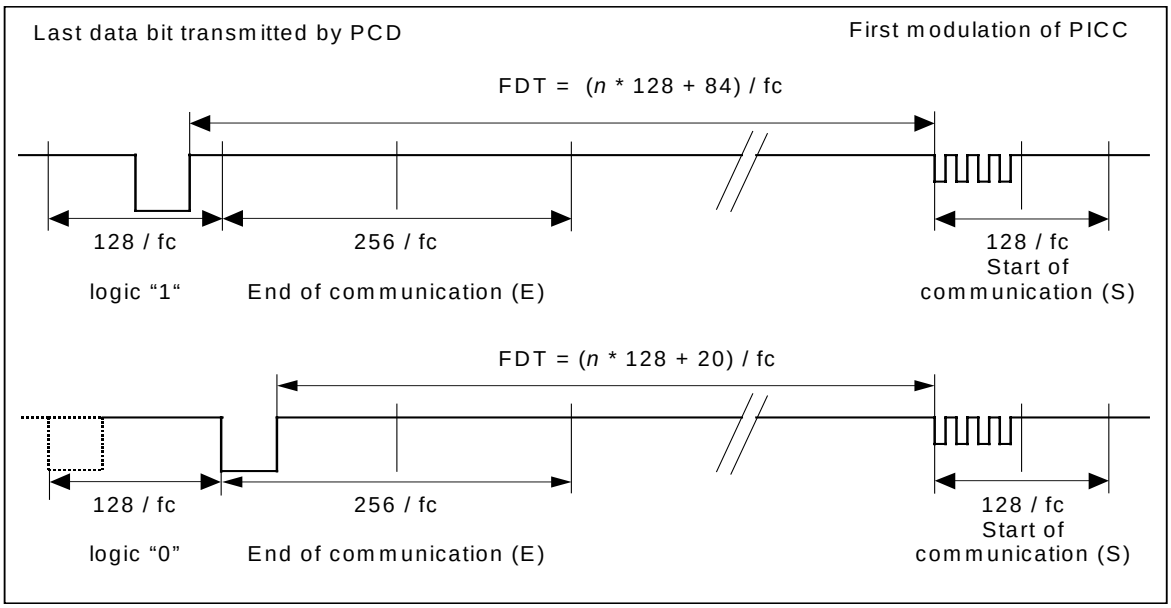


**Figure 1 — Frame delay time PCD to PICC**

**Table 1 — Frame delay time PCD to PICC**

| Command type | *n* (integer value) | FDT | |
|---|---|---|---|
| | | last bit = (1)b | last bit = (0)b |
| REQA Command<br>WUPA Command<br>ANTICOLLISION Command<br>SELECT Command | 9 | 1236 / *fc* | 1172 / *fc* |
| All other commands | ≥ 9 | (*n* * 128 + 84) / *fc* | (*n* * 128 + 20) / *fc* |

The value *n* = 9 means that all PICCs in the field shall respond in a synchronous way which is needed for anticollision.

For all other commands the PICC shall ensure that the first modulation edge within the start bit is aligned to the bit-grid defined in Figure 1.

### 6.1.3 Frame delay time PICC to PCD

This is the time between the last modulation transmitted by the PICC and the first pause transmitted by the PCD and shall be at least 1172 / *fc*.


© ISO/IEC 2001 – All rights reserved

IPR2025-01232
Apple EX1016 Page 41

### 6.1.4 Request Guard Time

The Request Guard Time is defined as the minimum time between the start bits of two consecutive REQA commands. It has the value 7000 / *fc*.

### 6.1.5 Frame formats

The following frame types are defined:

— short frames for commands defined in Table 2;

— standard frames for regular commands;

— bit oriented anticollision frame for anticollision command.

#### 6.1.5.1 Short frame

A short frame is used to initiate communication and consists of, in the following order:

— start of communication;

— 7 data bits transmitted LSB first (for coding see Table 2);

— end of communication.

No parity bit is added.

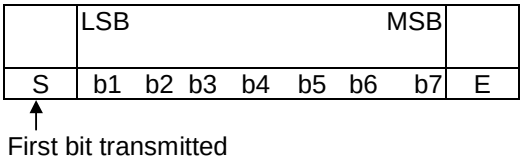


**Figure 2 — Short frame**

#### 6.1.5.2 Standard frame

Standard frames are used for data exchange and consist of:

— start of communication;

— n * (8 data bits + odd parity bit), with n ≥ 1. The LSB of each byte is transmitted first. Each byte is followed by an odd parity bit. The parity bit P is set such that the number of 1s is odd in (b1 to b8, P);

— end of communication.

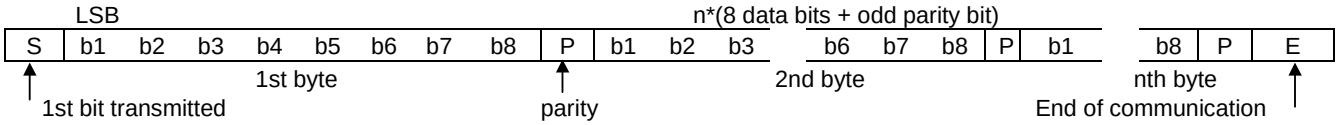


**Figure 3 — Standard Frame**

#### 6.1.5.3 Bit oriented anticollision frame

A collision is detected when at least two PICCs transmit different bit patterns to the PCD. In this case the carrier is modulated with the subcarrier for the whole bit duration for at least one bit.

© ISO/IEC 2001 – All rights reserved


IPR2025-01232
Apple EX1016 Page 42

Bit oriented anticollision frames shall only be used during bit frame anticollision loops and are standard frames with a length of 7 bytes, split into two parts:

— part 1 for transmission from PCD to PICC;

— part 2 for transmission from PICC to PCD.

For the length of part 1 and part 2, the following rules shall apply:

— rule 1: The sum of data bits shall be 56;

— rule 2: The minimum length of part 1 shall be 16 data bits;

— rule 3: The maximum length of part 1 shall be 55 data bits.

Consequently, the minimum length of part 2 shall be 1 data bit and the maximum length shall be 40 data bits.

Since the split can occur at any bit position within a byte, two cases are defined:

— case FULL BYTE: Split after a complete byte. A parity bit is added after the last data bit of part 1;

— case SPLIT BYTE: Split within a byte. No parity bit is added after the last data bit of part 1.

The following examples for case FULL BYTE and case SPLIT BYTE define the bit organization and order of bit transmission.

NOTE These examples include proper values for NVB and BCC.

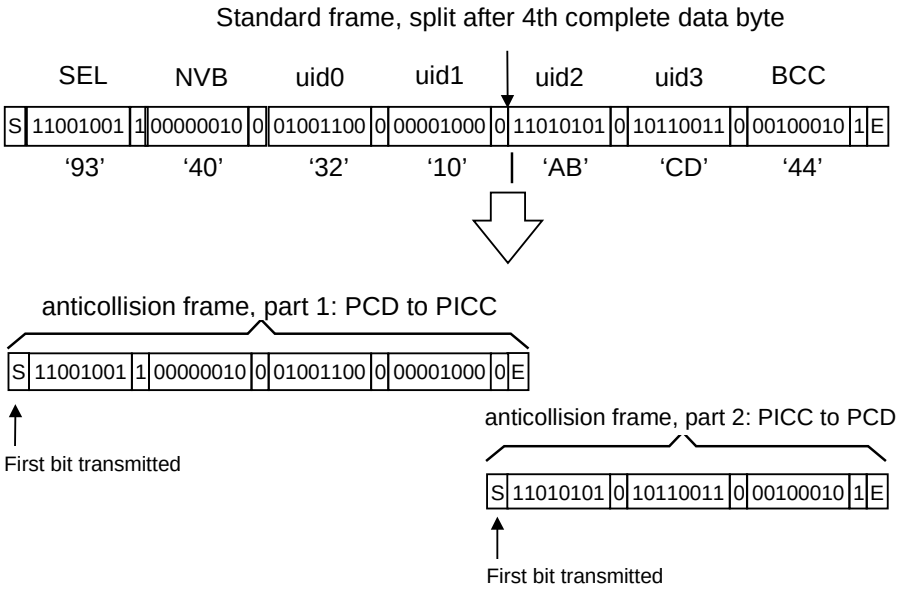


**Figure 4 — Bit organization and transmission of bit oriented anticollision frame, case FULL BYTE**


© ISO/IEC 2001 – All rights reserved

IPR2025-01232
Apple EX1016 Page 43

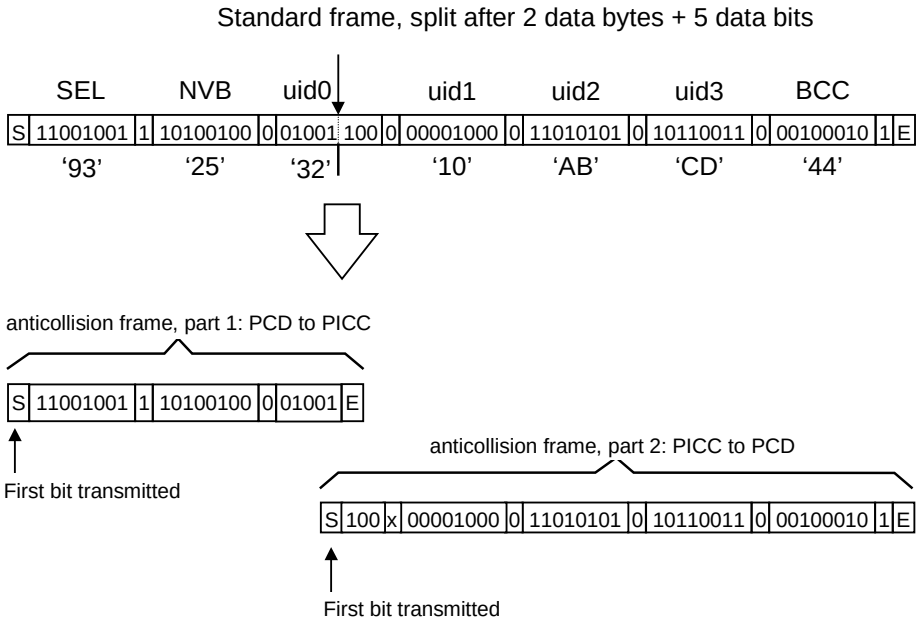


**Figure 5 — Bit organization and transmission of bit oriented anticollision frame, case SPLIT BYTE**

For a SPLIT BYTE, the first parity bit of part 2 shall be ignored by the PCD.

### 6.1.6 CRC_A

The frame CRC_A is a function of k data bits, which consist of all the data bits in the frame, excluding parity bits, S and E, and the CRC_A itself. Since data is encoded in bytes, the number of bits k is a multiple of 8. For error checking, the two CRC_A bytes are sent in the standard frame, after the bytes and before the E. The CRC_A is as defined in ISO/IEC 13239, but the initial register content shall be '6363' and the register content shall not be inverted after calculation.

For an example refer to annex B.

## 6.2 PICC states

The following sections provide descriptions of the states for a PICC of Type A specific to the bit collision detection protocol.

The following state diagram takes all possible state transitions caused by commands of this part of ISO/IEC 14443 into account.

PICCs react to valid received frames only. No response is sent when transmission errors are detected.

The following symbols apply for the state diagram shown in Figure 6 below.

AC ANTICOLLISION Command (matched UID)

nAC ANTICOLLISION Command (not matched UID)

SELECT SELECT Command (matched UID)

nSELECT SELECT Command (not matched UID)

© ISO/IEC 2001 – All rights reserved


IPR2025-01232
Apple EX1016 Page 44

DESELECT DESELECT Command, defined in ISO/IEC 14443-4

Error transmission error detected

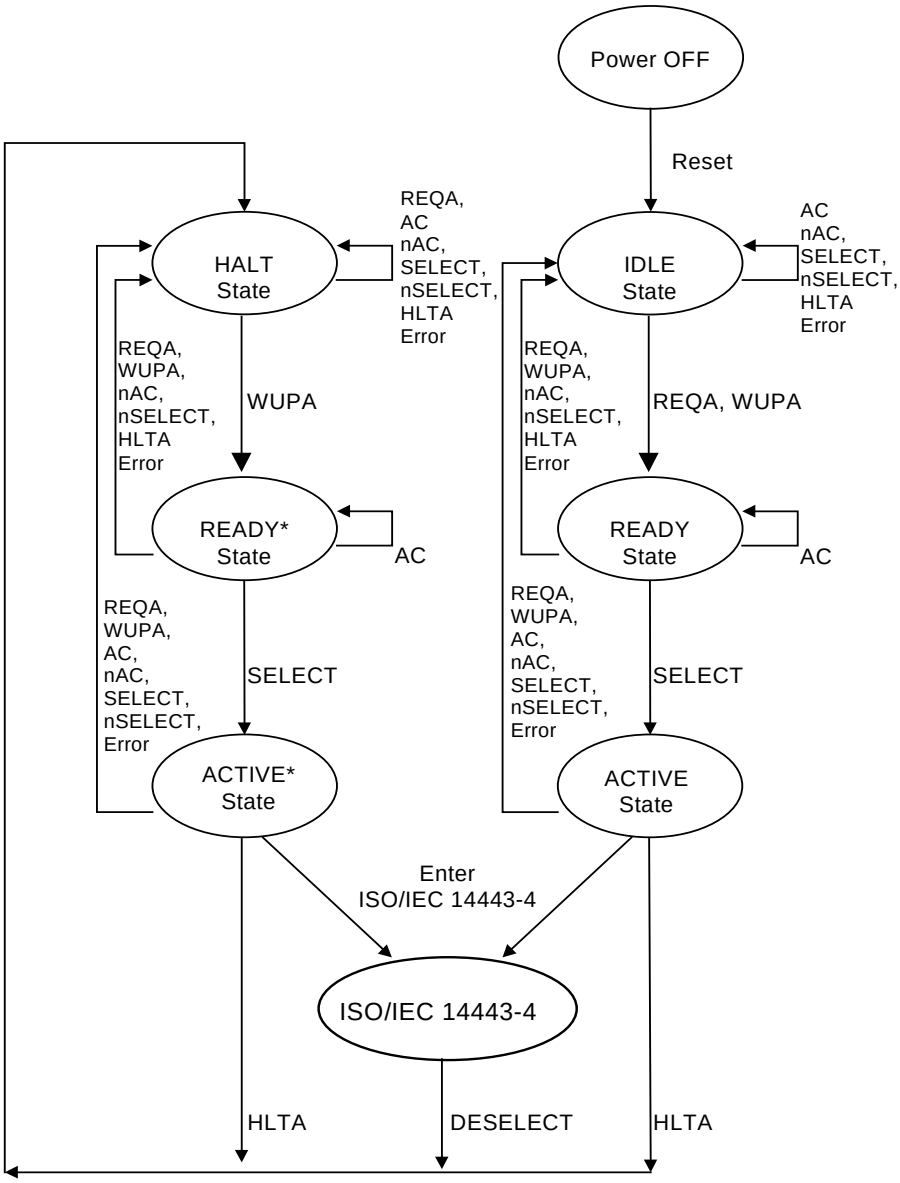


**Figure 6 — PICC Type A state diagram**

PICCs being compliant with ISO/IEC 14443-3 but not using ISO/IEC 14443-4 may leave the ACTIVE or ACTIVE* State by proprietary commands.

### 6.2.1 POWER-OFF State

**Description**:

In the POWER-OFF State, the PICC is not powered due to a lack of carrier energy.


© ISO/IEC 2001 – All rights reserved

IPR2025-01232
Apple EX1016 Page 45

**State exit conditions and transitions**:

If the PICC is in an energizing magnetic field greater than $H_{min}$ (see ISO/IEC 14443-2), it shall enter its IDLE State within a delay not greater than defined in clause 5.

### 6.2.2 IDLE State

**Description**:

In the IDLE State, the PICC is powered. It listens for commands and shall recognize REQA and WUPA Commands.

**State exit conditions and transitions**:

The PICC enters the READY State after it has received a valid REQA or WUPA Command and transmitted its ATQA.

### 6.2.3 READY State

**Description**:

In the READY State, either the bit frame anticollision or a proprietary anticollision method can be applied. Cascade levels are handled inside this state to get the complete UID.

**State exit conditions and transitions**:

The PICC enters the ACTIVE State when it is selected with its complete UID.

### 6.2.4 ACTIVE State

**Description**:

In the ACTIVE State, the PICC listens to any higher layer message.

**State exit conditions and transitions**:

The PICC enters the HALT State when a valid HLTA Command is received.

NOTE In the higher layer protocol, specific commands may be defined to return the PICC to its HALT State.

### 6.2.5 HALT State

**Description**:

In the HALT State, the PICC shall respond only to a WUPA Command.

**State exit conditions and transitions**:

The PICC enters the READY* State after it has received a valid WUPA Command and transmitted its ATQA.

### 6.2.6 READY* State

**Description**:

The READY* State is similar to the READY State, either the bit frame anticollision or a proprietary anticollision method can be applied. Cascade levels are handled inside this state to get complete UID.

© ISO/IEC 2001 – All rights reserved


IPR2025-01232
Apple EX1016 Page 46

**State exit conditions and transitions**:

The PICC enters the ACTIVE* State when it is selected with its complete UID.

### 6.2.7 ACTIVE* State

**Description**:

The ACTIVE* State is similar to the ACTIVE State, the PICC is selected and listens to any higher layer message.

**State exit conditions and transitions**:

The PICC enters the HALT State when a valid HLTA Command is received.

## 6.3 Command set

The commands used by the PCD to manage communication with several PICCs are:

— REQA;

— WUPA;

— ANTICOLLISION;

— SELECT;

— HLTA.

The commands use the byte and frame formats described above.

### 6.3.1 REQA and WUPA Commands

The REQA and WUPA Commands are sent by the PCD to probe the field for PICCs of Type A. They are transmitted within a short frame.

See Figure 6 to check in which cases PICC actually have to answer to these respective commands.

Particularly the WUPA Command is sent by the PCD to put PICCs which have entered the HALT State back into the READY* State. They shall then participate in further anticollision and selection procedures.

Table 2 shows the coding of REQA and WUPA Commands which use the Short frame format.

**Table 2 — Coding of Short Frame**

| b7 | b6 | b5 | b4 | b3 | b2 | b1 | Meaning |
|---|---|---|---|---|---|---|---|
| 0 | 1 | 0 | 0 | 1 | 1 | 0 | ‘26’ = REQA |
| 1 | 0 | 1 | 0 | 0 | 1 | 0 | ‘52’ = WUPA |
| 0 | 1 | 1 | 0 | 1 | 0 | 1 | ‘35’ = Optional timeslot method, see Annex C |
| 1 | 0 | 0 | x | x | x | x | ‘40’ to ‘4F’ = Proprietary |
| 1 | 1 | 1 | 1 | x | x | x | ‘78’ to ‘7F’ = Proprietary |
| all other values | | | | | | | RFU |


© ISO/IEC 2001 – All rights reserved

IPR2025-01232
Apple EX1016 Page 47

### 6.3.2 ANTICOLLISION and SELECT Commands

These commands are used during an anticollision loop (see Figure 4 and 5). The ANTICOLLISION and SELECT Commands consist of:

— select code SEL (1 byte);

— number of valid bits NVB (1 byte, for coding see Table 7);

— 0 to 40 data bits of UID CLn according to the value of NVB.

SEL specifies the cascade level CL*n*.

The ANTICOLLISION Command is transmitted within bit oriented anticollision frame.

The SELECT Command is transmitted within standard frame

As long as NVB does not specify 40 valid bits, the command is called ANTICOLLISION Command, where the PICC remains in READY or READY* State.

If NVB specifies 40 data bits of UID CLn (NVB='70'), a CRC_A shall be appended. This command is called SELECT Command.

If the PICC has transmitted the complete UID, it transits from READY State to ACTIVE State or from READY* State to ACTIVE* State and indicates in its SAK response that UID is complete.

Otherwise, the PICC remains in READY or READY* State and the PCD shall initiate a new anticollision loop with increased cascade level.

### 6.3.3 HLTA Command

The HLTA Command consists of two bytes followed by CRC_A and shall be transmitted within Standard Frame.

First bit transmitted
↓

| | | | | |
|---|---|---|---|---|
| S | ‘50’ | ‘00’ | CRC_A | E |

**Figure 7 — Standard frame containing HLTA Command**

If the PICC responds with any modulation during a period of 1 ms after the end of the frame containing the HLTA Command, this response shall be interpreted as 'not acknowledge'.

## 6.4 Select sequence

The purpose of the select sequence is to get the UID from one PICC and to select this PICC for further communication.

© ISO/IEC 2001 – All rights reserved


IPR2025-01232
Apple EX1016 Page 48

### 6.4.1 Select sequence flowchart

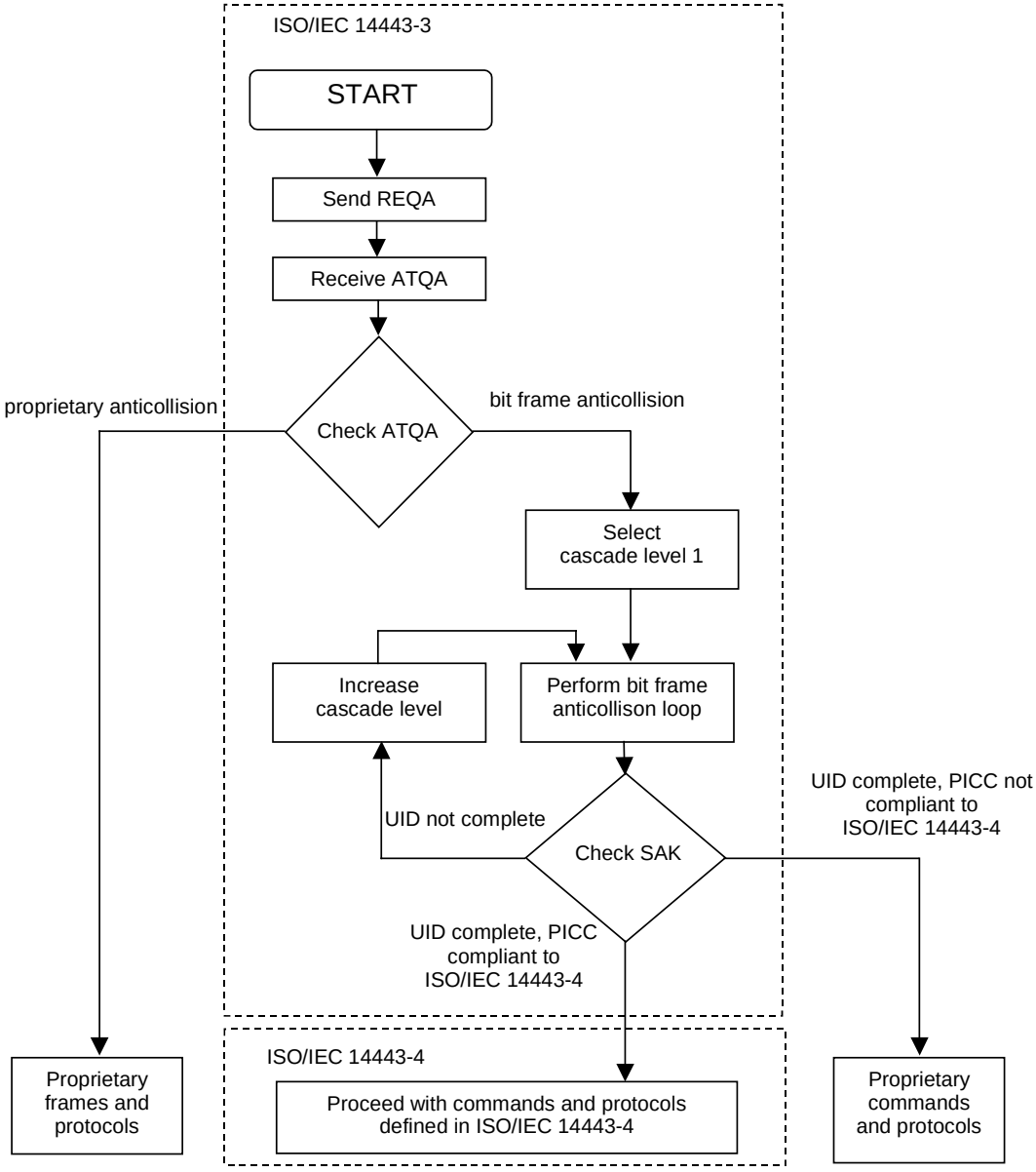


**Figure 8 — Initialization and anticollision flowchart for PCD**

### 6.4.2 ATQA - Answer To Request

After a REQA Command is transmitted by the PCD, all PICCs in the IDLE State shall respond synchronously with ATQA.

After a WUPA Command is transmitted by the PCD, all PICCs in the IDLE or HALT State shall respond synchronously with ATQA.

The PCD shall detect any collision that may occur when multiple PICCs respond.

An example is given in annex A.


© ISO/IEC 2001 – All rights reserved

IPR2025-01232
Apple EX1016 Page 49

#### 6.4.2.1 Coding of ATQA

**Table 3 — Coding of ATQA**

MSB LSB

| b16 | b15 | b14 | b13 | b12 | b11 | b10 | b9 | b8 | b7 | b6 | b5 | b4 | b3 | b2 | b1 |
|---|---|---|---|---|---|---|---|---|---|---|---|---|---|---|---|
| RFU | | | | Proprietary coding | | | | UID size bit frame | | RFU | Bit frame anticollision | | | | |

All RFU bits shall be set to 0.

#### 6.4.2.2 Coding rules for bit frame anticollision

— Rule 1: Bits b7 and b8 code the UID size (single, double or triple, see Table 4).

— Rule 2: One out of the five bits b1, b2, b3, b4 or b5 shall be set to (1)b to indicate bit frame anticollision (see Table 5)

NOTE Bit 9 to bit 12 indicate additional and proprietary methods

**Table 4 — Coding of b7, b8 for bit frame anticollision**

| b8 | b7 | Meaning |
|---|---|---|
| 0 | 0 | UID size: single |
| 0 | 1 | UID size: double |
| 1 | 0 | UID size: triple |
| 1 | 1 | RFU |

**Table 5 — Coding of b1 - b5 for bit frame anticollision**

| b5 | b4 | b3 | b2 | b1 | Meaning |
|---|---|---|---|---|---|
| 1 | 0 | 0 | 0 | 0 | bit frame anticollision |
| 0 | 1 | 0 | 0 | 0 | bit frame anticollision |
| 0 | 0 | 1 | 0 | 0 | bit frame anticollision |
| 0 | 0 | 0 | 1 | 0 | bit frame anticollision |
| 0 | 0 | 0 | 0 | 1 | bit frame anticollision |

© ISO/IEC 2001 – All rights reserved


IPR2025-01232
Apple EX1016 Page 50

### 6.4.3 Anticollision and Select

#### 6.4.3.1 Anticollision loop within each cascade level

The following algorithm shall apply to the anticollision loop:

| | |
|---|---|
| Step 1 | The PCD shall assign SEL with the code for the selected anticollision type and cascade level. |
| Step 2 | The PCD shall assign NVB with the value of ‘20’.<br>NOTE This value defines that the PCD will transmit no part of UID CLn. Consequently this command forces all PICCs in the field to respond with their complete UID CLn. |
| Step 3 | The PCD shall transmit SEL and NVB. |
| Step 4 | All PICCs in the field shall respond with their complete UID CLn. |
| Step 5 | Assuming the PICCs in the field have unique serial numbers, then if more than one PICC responds, a collision occurs. If no collision occurs, steps 6 to 10 shall be skipped. |
| Step 6 | The PCD shall recognize the position of the first collision. |
| Step 7 | The PCD shall assign NVB with a value that specifies the number of valid bits of UID CLn. The valid bits shall be part of the UID CLn that was received before a collision occurred followed by a (0)b or (1)b, decided by the PCD. A typical implementation adds a (1)b. |
| Step 8 | The PCD shall transmit SEL and NVB, followed by the valid bits. |
| Step 9 | Only PICCs of which the part of UID CLn is equal to the valid bits transmitted by the PCD shall transmit their remaining bits of the UID CLn. |
| Step 10 | If further collisions occur, steps 6 to 9 shall be repeated. The maximum number of loops will be 32. |
| Step 11 | If no further collision occurs, the PCD shall assign NVB with the value of ‘70’.<br>NOTE This value defines that the PCD will transmit the complete UID CLn. |
| Step 12 | The PCD shall transmit SEL and NVB, followed by all 40 bits of UID CLn, followed by CRC_A checksum. |
| Step 13 | The PICC which UID CLn matches the 40 bits shall respond with its SAK. |
| Step 14 | If the UID is complete, the PICC shall transmit SAK with cleared cascade bit and shall transit from READY State to ACTIVE State or from READY* State to ACTIVE* State. |
| Step 15 | The PCD shall check if the cascade bit of SAK is set to decide whether further anticollision loops with increased cascade level shall follow. |

If the UID of a PICC is complete and known by the PCD, the PCD may skip step 2 - step 10 to select this PICC without performing the anticollision loop.

NOTE Figure 9 explains steps 1 to 13.


© ISO/IEC 2001 – All rights reserved

IPR2025-01232
Apple EX1016 Page 51

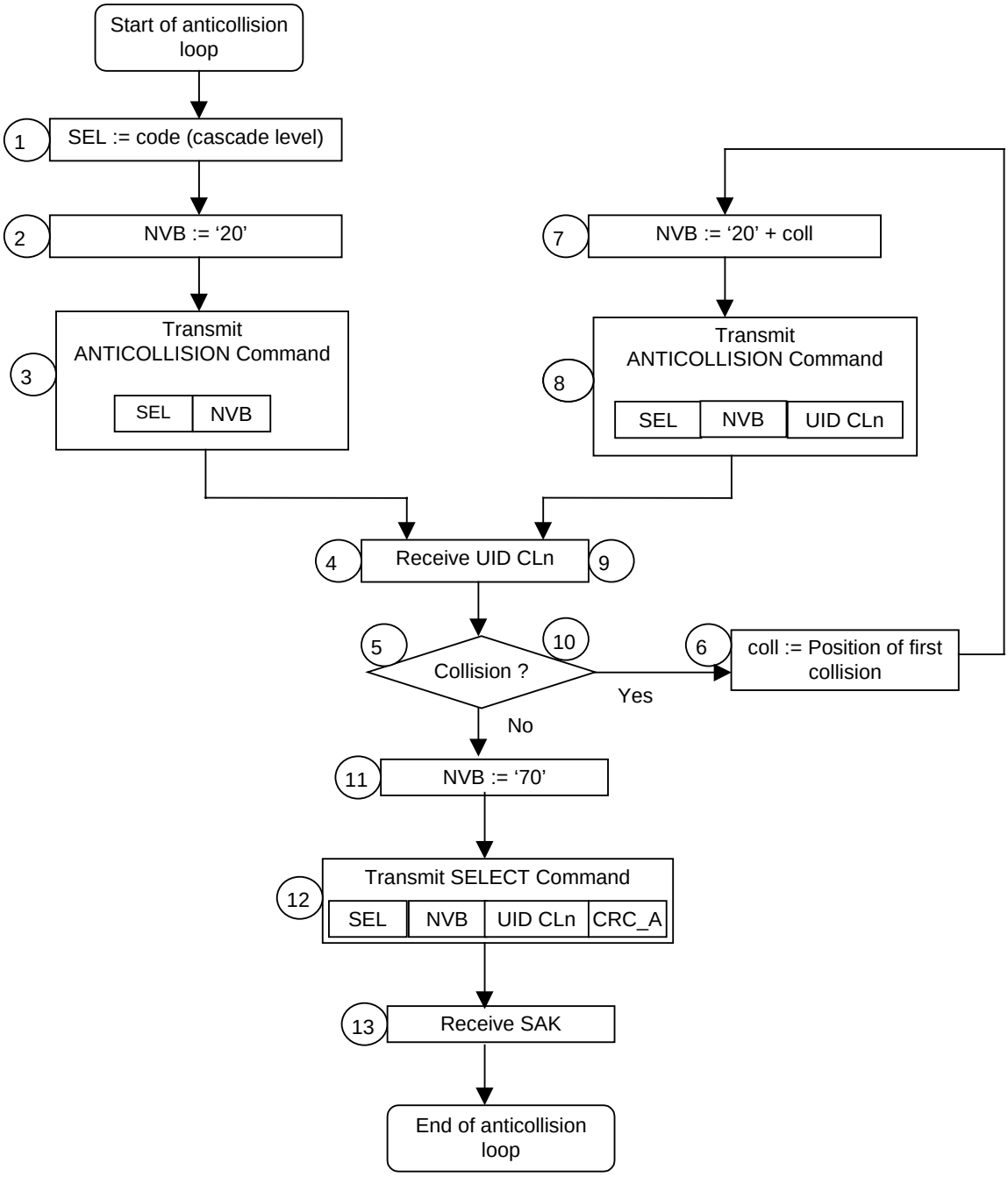


**Figure 9 — Anticollision loop, flowchart for PCD**

NOTE The circled numbers correspond to the steps of the algorithm.

#### 6.4.3.2 Coding of SEL (Select code)

Length: 1 byte
Possible values: ‘93’, ‘95’, ‘97’

© ISO/IEC 2001 – All rights reserved


IPR2025-01232
Apple EX1016 Page 52

**Table 6 — Coding of SEL**

| b8 | b7 | b6 | b5 | b4 | b3 | b2 | b1 | Meaning |
|---|---|---|---|---|---|---|---|---|
| 1 | 0 | 0 | 1 | 0 | 0 | 1 | 1 | ‘93’: Select cascade level 1 |
| 1 | 0 | 0 | 1 | 0 | 1 | 0 | 1 | ‘95’: Select cascade level 2 |
| 1 | 0 | 0 | 1 | 0 | 1 | 1 | 1 | ‘97’: Select cascade level 3 |
| 1 | 0 | 0 | 1 | other values except those here above | | | | RFU |

#### 6.4.3.3 Coding of NVB (Number of Valid Bits)

Length: 1 byte

The upper 4 bits are called “Byte count” and specify the integer part of the number of all valid data bits transmitted by the PCD (including SEL and NVB) divided by 8. Consequently, the minimum value of “Byte count” is 2 and the maximum value is 7.

The lower 4 bits are called “bit count” and specify the number of all valid data bits transmitted by the PCD (including SEL and NVB) modulo 8.

**Table 7 — Coding of NVB**

| b8 | b7 | b6 | b5 | Meaning |
|---|---|---|---|---|
| 0 | 0 | 1 | 0 | Byte count = 2 |
| 0 | 0 | 1 | 1 | Byte count = 3 |
| 0 | 1 | 0 | 0 | Byte count = 4 |
| 0 | 1 | 0 | 1 | Byte count = 5 |
| 0 | 1 | 1 | 0 | Byte count = 6 |
| 0 | 1 | 1 | 1 | Byte count = 7 |

| b4 | b3 | b2 | b1 | Meaning |
|---|---|---|---|---|
| 0 | 0 | 0 | 0 | bit count = 0 |
| 0 | 0 | 0 | 1 | bit count = 1 |
| 0 | 0 | 1 | 0 | bit count = 2 |
| 0 | 0 | 1 | 1 | bit count = 3 |
| 0 | 1 | 0 | 0 | bit count = 4 |
| 0 | 1 | 0 | 1 | bit count = 5 |
| 0 | 1 | 1 | 0 | bit count = 6 |
| 0 | 1 | 1 | 1 | bit count = 7 |

#### 6.4.3.4 Coding of SAK (Select acknowledge)

SAK is transmitted by the PICC when NVB has specified 40 valid data bits and when all these data bits match with UID CLn.

| 1st byte | 2nd, 3rd bytes |
|---|---|
| **SAK** (1 byte) | **CRC_A** (2 bytes) |
| MSB LSB | MSB LSB |

**Figure 10 — Select acknowledge (SAK)**

The coding of bits b3 (cascade bit) and b6 is given in Table 8.


© ISO/IEC 2001 – All rights reserved

IPR2025-01232
Apple EX1016 Page 53

**Table 8 — Coding of SAK**

| b8 | b7 | b6 | b5 | b4 | b3 | b2 | b1 | Meaning |
|---|---|---|---|---|---|---|---|---|
| x | x | x | x | x | 1 | x | x | Cascade bit set: UID not complete |
| x | x | 1 | x | x | 0 | x | x | UID complete,<br>PICC compliant with ISO/IEC 14443-4 |
| x | x | 0 | x | x | 0 | x | x | UID complete,<br>PICC not compliant with ISO/IEC 14443-4 |

### 6.4.4 UID contents and cascade levels

The UID consists of 4, 7 or 10 UID bytes. Consequently, the PICC shall handle up to 3 cascade levels to get all UID bytes. Within each cascade level, a part of UID shall be transmitted to the PCD. According to the cascade level, three types of UID size are defined. This UID size shall be consistent with Table 4.

**Table 9 — UID size**

| Cascade level | UID size | Number of UID bytes |
|---|---|---|
| 1 | single | 4 |
| 2 | double | 7 |
| 3 | triple | 10 |

The UID is a fixed unique number or a random number which is dynamically generated by the PICC. The first byte (uid0) of the UID assigns the content of the following bytes of the UID.

**Table 10 — Single size UIDs**

| uid0 | Description |
|---|---|
| '08' | uid1 to uid3 is a random number which is dynamically generated |
| 'x0' - 'x7' | proprietary fixed number |
| 'x9' - 'xE' | |
| '18' - 'F8' | RFU |
| 'xF' | |

The value '88' of the cascade tag CT shall not be used for uid0 in single size UID.

**Table 11 — Double and triple size UIDs**

| uid0 | Description |
|---|---|
| Manufacturer ID according to ISO/IEC 7816-6/AM1* | Each manufacturer is responsible for the uniqueness of the value of the other bytes of the unique number. |
| * The values '81' to 'FE', which are marked for 'Private use' in ISO/IEC 7816-6/AM1 shall not be allowed in this context. | |

© ISO/IEC 2001 – All rights reserved


IPR2025-01232
Apple EX1016 Page 54

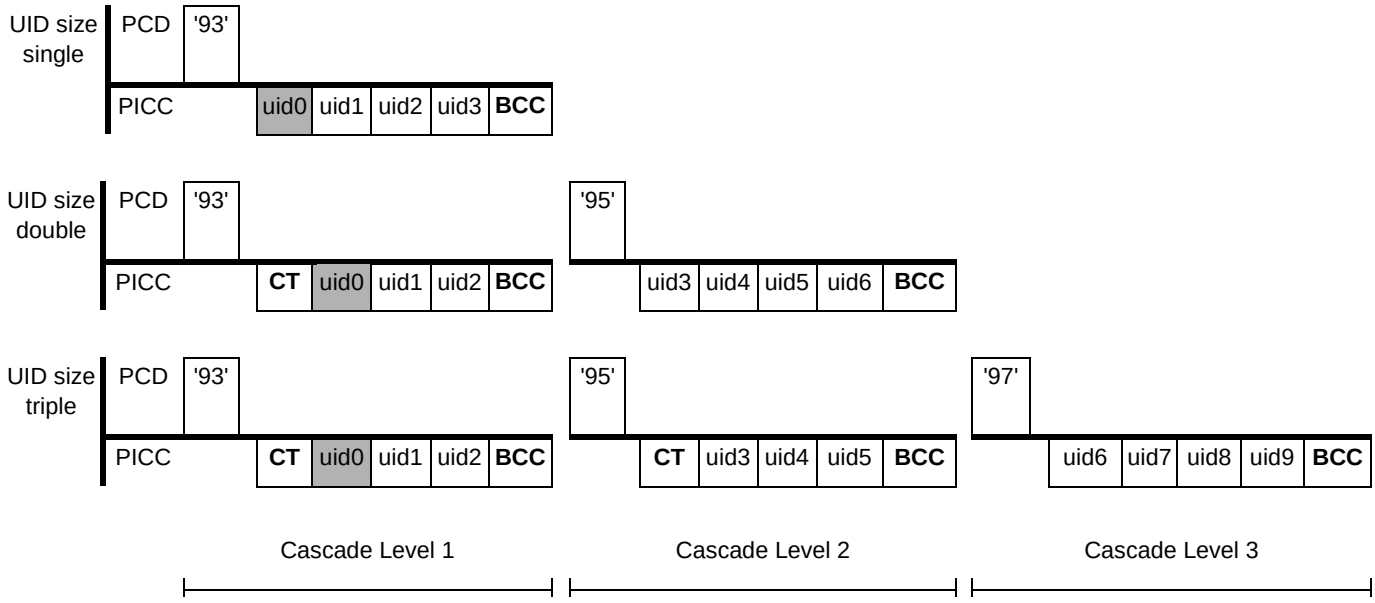


**Figure 11 — Usage of cascade levels**

NOTE The purpose of the cascade tag is to force a collision with PICCs that have a smaller UID size.

The following algorithm shall apply to the PCD to get the complete UID:

| | |
|---|---|
| Step 1 | The PCD selects cascade level 1 |
| Step 2 | The anticollision loop shall be performed |
| Step 3 | The PCD shall check the cascade bit of SAK |
| Step 4 | If the cascade bit is set, the PCD shall increase the cascade level and initiate a new anticollision loop |

# 7 Type B – Initialization and anticollision

This section describes the initialization and collision detection protocol applicable for PICCs of Type B.

## 7.1 Character, frame format and timing

This section defines the character, frame format and timing used during communication initialization and anticollision for PICCs of Type B. For bit representation and coding refer to ISO/IEC 14443-2.

### 7.1.1 Character transmission format

Bytes are transmitted and received between PICCs and a PCD by characters, the format of which during the Anti-collision sequence is as follows:

— 1 start bit at logic "0";

— 8 data bits transmitted, LSB first;

— 1 stop bit at logic "1".

The transmission of one byte is performed with a character requiring 10 etu as illustrated below.


© ISO/IEC 2001 – All rights reserved

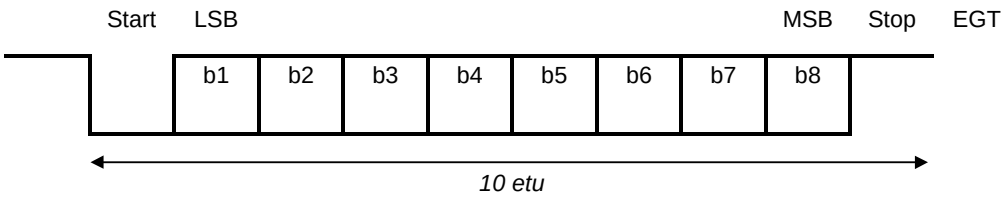


**Figure 12 — Character format**

Bit boundaries within a character shall occur between (n - 0,125) etu and (n + 0,125) etu where n is the number of bit boundaries after the start bit falling edge (1 ≤ n ≤ 9).

### 7.1.2 Character separation

A character is separated from the next one by the extra guard time EGT.

The EGT between 2 consecutive characters sent by the PCD to the PICC shall be between 0 and 57 µs.

The EGT between 2 consecutive characters sent by the PICC to the PCD shall be between 0 and 19 µs.

### 7.1.3 Frame format

PCDs and PICCs shall send characters as frames. The frame is normally delimited by SOF and by EOF. See 7.10.3 for exceptions.

| | | |
|---|---|---|
| SOF | Characters | EOF |

**Figure 13 — Frame Format**

### 7.1.4 SOF

SOF is composed of:

— one falling edge;

— followed by 10 etu with a logic "0";

— followed by one single rising edge located anywhere within the following etu;

— followed by at least 2 etu (but no more than 3 etu) with a logic "1".

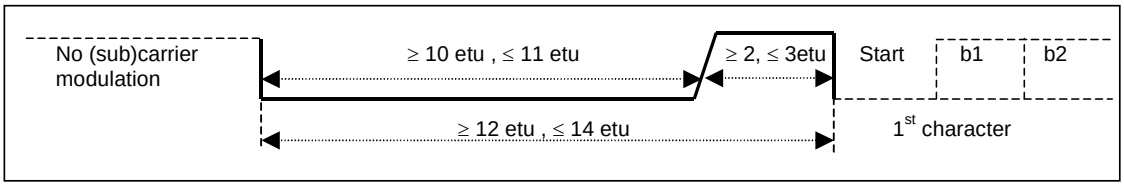


**Figure 14 — SOF**

© ISO/IEC 2001 – All rights reserved


IPR2025-01232
Apple EX1016 Page 56

### 7.1.5 EOF

EOF is composed of:

— one falling edge;

— followed by 10 etu with a logic "0";

— followed by one single rising edge located anywhere within the following etu.

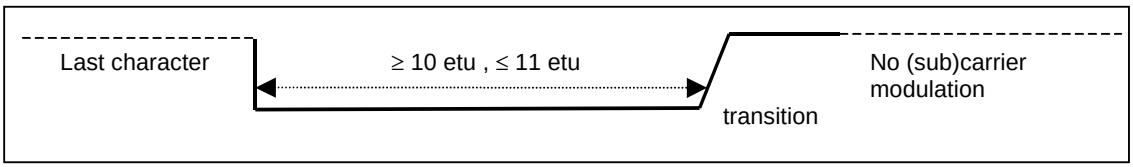


**Figure 15 — EOF**

NOTE The probability of receiving a false EOF is low and corresponds to the transmission of a '00' character with a wrong reception of the stop bit.

### 7.1.6 Timing before the PICC SOF

PICC start of communication after a PCD data transmission shall respect the timing defined in Figure 16.

The default minimum values of TR0 and TR1 are defined in ISO/IEC 14443-2 and may be reduced by the PCD, see 7.10.3.

The maximum value of TR0 is 256/*fs* for ATQB only and $(256/fs)*2^{FWI}$ for all other frames (see 7.9.4.3).

The maximum value of TR1 is 200/*fs*.

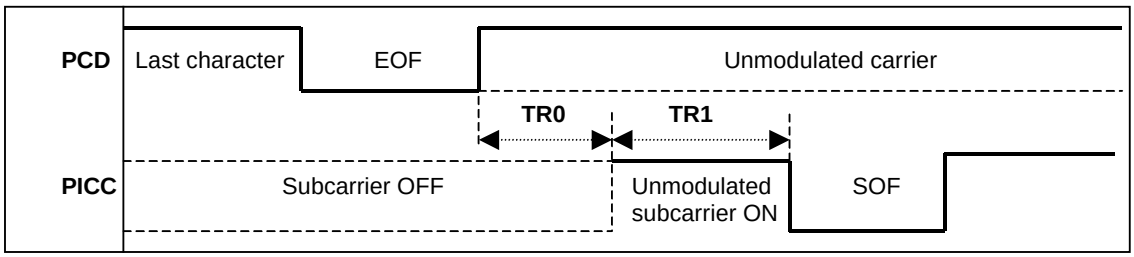


**Figure 16 — PICC subcarrier SOF**

A PICC may turn on the subcarrier only if it intends to begin transmitting information.

### 7.1.7 Timing before the PCD SOF

PCD start of communication after a PICC data transmission and EOF shall respect the timing in Figure 17.

The PICC shall turn off its subcarrier after the transmission of the EOF. The subcarrier signal shall:

— not be stopped before the end of the EOF;

— be stopped no later than 2 etu after the end of the EOF.


© ISO/IEC 2001 – All rights reserved

IPR2025-01232
Apple EX1016 Page 57

The minimum delay between the PICC EOF start (falling edge) and the PCD SOF start (falling edge) is 10 etu + 32 /*fs*.

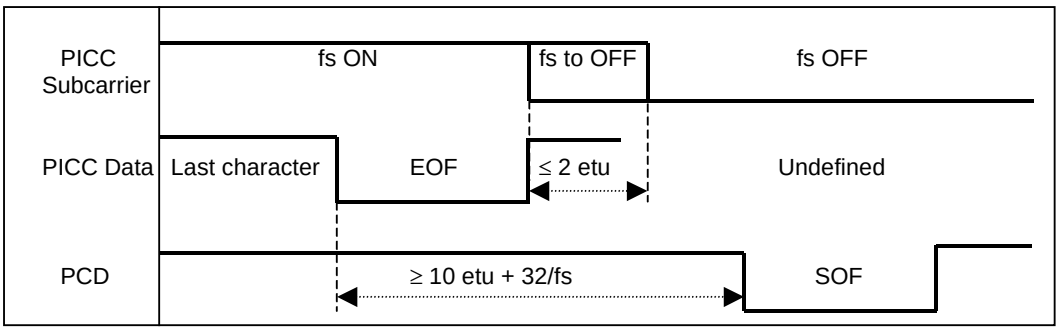


**Figure 17 — PICC to PCD EOF**

## 7.2 CRC_B

| 1st,…….bytes | |
|---|---|
| **Data bytes** (n bytes) | **CRC_B** (2 bytes) |

MSB LSB MSB LSB

**Figure 18 — Position of a CRC_B within a frame**

A frame shall only be considered correct if it is received with a valid CRC_B value.

The frame CRC_B is a function of k data bits, which consist of all the data bits in the frame, excluding start bits, stop bits, delays between bytes, SOF and EOF, and the CRC_B itself. Since data is encoded in bytes, the number of bits k is a multiple of 8.

For error checking, the two CRC_B bytes are included in the frame, after the data bits and before the EOF. The CRC_B is as defined in ISO/IEC 13239. The initial register content shall be all ones: ‘FFFF’.

For example refer to annex B.

## 7.3 Anticollision sequence

An anticollision sequence is managed by the PCD through a set of commands detailed in this section.

The PCD is the master of the communication with one or more PICCs. It initiates PICC communication activity by issuing a REQB Command to prompt for PICCs to respond.

During the anticollision sequence it may happen that two or more PICCs respond simultaneously: this is a collision. The command set allows the PCD to handle sequences to separate PICC transmissions in time. The PCD may repeat its anticollision procedure until it finds all PICCs in the operating volume.

Having completed the anticollision sequence, PICC communication will be under control of the PCD, allowing only one PICC to talk at a time.

The anticollision scheme is based on definition of timeslots in which PICCs are invited to answer with minimum identification data. The number of slots is parameterized in the REQB/WUPB and can vary from one to some integer number. PICC response probability in each timeslot is also controllable. PICCs are allowed to answer only once in the anticollision sequence.

© ISO/IEC 2001 – All rights reserved


IPR2025-01232
Apple EX1016 Page 58

Consequently, even in case of multiple PICCs present in the PCD field, there will probably be a slot in which only one PICC answers and where the PCD is able to capture the identification data. Based on the identification data the PCD is able to establish a communication channel with the identified PICC.

An anticollision sequence allows selection of one or more PICCs for further communication at any time.

The set of commands allows implementation of different anticollision management strategies at the PCD level. This strategy is under the control of the application designer and can include:

— probabilistic (repetitive single slot prompt with response probability less than or equal to 1);

— pseudo-deterministic (multiple slots with scanning of them during the anticollision sequence to have the maximum probability that all present PICCs answer);

— any combination of these methods that can be conducted dynamically.

## 7.4 PICC states description

Different states and transition conditions between states describe the PICC detailed behaviour during the anticollision sequence.


© ISO/IEC 2001 – All rights reserved

IPR2025-01232
Apple EX1016 Page 59

### 7.4.1 State transition diagram

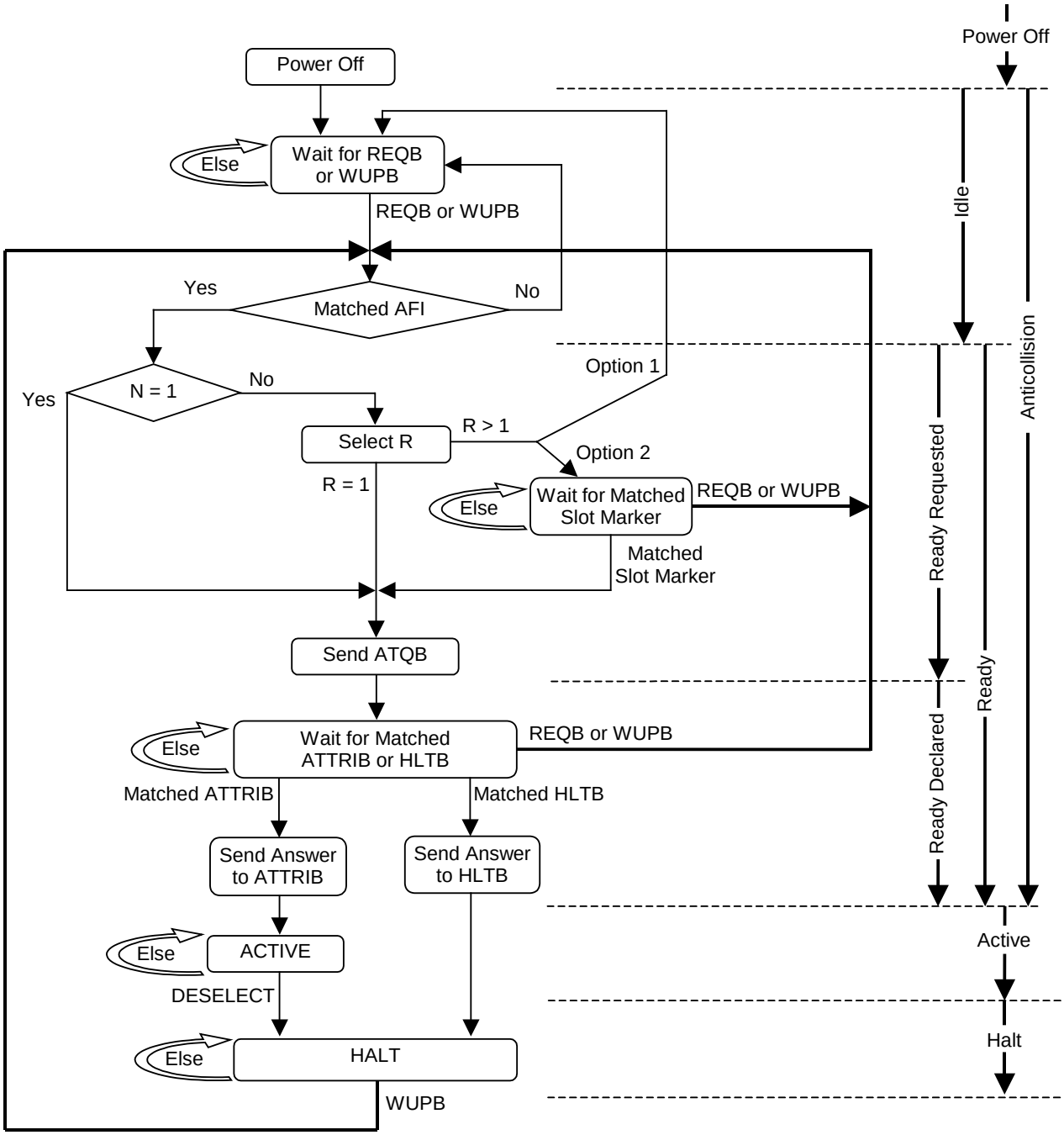


**Figure 19 — PICC state transition flowchart example**

NOTE 1 R is a random number chosen by the PICC in the range from 1 to N (for coding of N see 7.7.4).

NOTE 2 Option 1 – For PICCs not supporting Slot-MARKER Command (Probabilistic approach).

Option 2 – For PICCs supporting Slot-MARKER Command (Timeslot approach).

© ISO/IEC 2001 – All rights reserved


IPR2025-01232
Apple EX1016 Page 60

### 7.4.2 General statement for state description and transitions

To any state the following shall apply:

— the PICC shall return to POWER_OFF State if the RF field disappears.

To any state specific to the anticollision sequence (except ACTIVE State) the following shall apply:

— default communication parameters as defined in ISO/IEC 14443-2 and in the previous sections shall be used;

— the PICC shall not emit subcarrier except to transmit response frames as specified in the previous sections;

— if a frame from the PCD is valid (correct CRC_B), the PICC shall perform the required action and/or response depending on its state;

— as in anticollision commands the first 3 bits of the data in a frame are (101)b (3 first bits of anticollision Prefix byte) the PICC shall not answer to any command frame not starting with (101)b;

— the PICC shall only react to valid frames received (no response sent when transmission errors are detected).

### 7.4.3 POWER-OFF State

**Description**:

In the POWER-OFF State, the PICC is not powered due to a lack of carrier energy.

**State exit conditions and transitions**:

If the PICC is in an energizing magnetic field greater than Hmin (see ISO/IEC 14443-2), it shall enter its IDLE State within a delay not greater than defined in clause 5.

### 7.4.4 IDLE State

**Description**:

In the IDLE State, the PICC is powered. It listens for frames and shall recognize REQB and WUPB messages.

**State exit conditions and transitions**:

On reception of a valid REQB or WUPB Command frames the PICC moves onto the READY REQUESTED sub-state. (Valid REQB/WUPB means valid frame with REQB/WUPB Command and matched AFI. See REQB/WUPB Command specification for more details).

### 7.4.5 READY-REQUESTED sub-state

**Description**:

In the READY-REQUESTED sub-state, the PICC is powered and has received a valid REQB or WUPB Commands with a control parameter N. The PICC calculate a random number R which is used to control its subsequent operation as described in 7.6.

**State exit conditions and transitions**:

See 7.6 for details.


© ISO/IEC 2001 – All rights reserved

IPR2025-01232
Apple EX1016 Page 61

### 7.4.6 READY-DECLARED sub-state

**Description**:

In the READY-DECLARED sub-state, the PICC is powered and has sent its ATQB corresponding to the last valid REQB/WUPB message received.

It listens to frames and shall recognize REQB/WUPB, ATTRIB and HLTB commands.

**State exit conditions and transitions**:

On reception of a valid ATTRIB Command the PICC shall enter the ACTIVE State if the PUPI in the ATTRIB Command matches the PICC PUPI.

If the PUPI in the ATTRIB Command does not match the PICC PUPI the PICC remains in the READY-DECLARED sub-state.

On reception of a valid REQB/WUPB Command frame the same conditions and transitions apply as on reception of a valid REQB/WUPB Command frame in the IDLE State.

On reception of a matched HLTB Command the PICC shall enter the HALT State.

### 7.4.7 ACTIVE State

**Description**:

The PICC is powered and has entered a higher layer mode since a Card Identifier (CID) has been assigned to this PICC through the ATTRIB Command.

The PICC listens to any higher layer message properly formatted (proper CID and valid CRC_B).

The PICC shall not emit subcarrier following any frame with invalid CRC_B or with another CID than the one assigned.

**State exit conditions and transitions**:

The PICC enters the HALT State when a valid DESELECT Command frame is received (DESELECT Command is defined in ISO/IEC 14443-4).

**Specific remarks**:

Valid REQB/WUPB or Slot-MARKER frames shall not be answered.

A valid frame with an ATTRIB Command shall not be answered.

In the higher layer protocol, specific commands may be defined to return the PICC to other states (IDLE or HALT). The PICC may return to these states only following reception of such commands.

### 7.4.8 HALT State

**Description**:

The PICC shall respond only to a WUPB Command which brings it back to the IDLE State.

**State exit conditions and transitions**:

The PICC returns to the POWER_OFF State if the RF field disappears.

© ISO/IEC 2001 – All rights reserved


IPR2025-01232
Apple EX1016 Page 62

## 7.5 Command set

Four primitive commands are used to manage multi-node communication channels:

— REQB/WUPB;

— Slot-MARKER;

— ATTRIB;

— HLTB.

All four commands use the character, frame format and timing detailed in 7.1.

The commands and the responses of the PICC to these commands are described in the following sections.

Any frame received with a wrong format (wrong frame identifiers or invalid CRC_B) shall be ignored.

## 7.6 Anticollision response rules

A PICC which is in the READY-REQUESTED sub-state, after receiving a valid REQB/WUPB Command (Requested AFI=0 or AFI matched with an internal application), shall respond according to the following rules, where the parameter N has been given in the REQB/WUPB Command:

If N = 1 the PICC shall send an ATQB and shall move to the READY-DECLARED sub-state

If N > 1 the PICC shall internally generate a random number R which shall be evenly distributed between 1 to N

If R = 1 the PICC shall send an ATQB and shall move to the READY-DECLARED sub-state.

If R > 1:

— PICCs employing the probabilistic approach (informative option 1) shall return to IDLE State;

— PICCs employing the slot marker approach (informative option 2) shall wait until they have received a Slot-MARKER Command with a matched slot number (slot number = R) before sending the ATQB and moving to the READY-DECLARED sub-state.

## 7.7 REQB/WUPB Command

The REQB and WUPB Commands sent by the PCD are used to probe the field for PICCs of Type B.

In addition WUPB is particularly used to also wake up PICCs which are in HALT State.

The number of slots N is included in the command as a parameter to optimize the anti-collision algorithm for a given application. See Figure 19 for detailed description of when the PICC shall respond to these respective commands.

### 7.7.1 REQB/WUPB Command format

REQB/WUPB Command has the following format:

| 1st byte | 2nd byte | 3rd byte | 4th, 5th bytes |
|---|---|---|---|
| **APf** (1 byte) | **AFI** (1 byte) | **PARAM** (1 byte). | **CRC_B** (2 bytes) |

MSB LSB MSB LSB MSB LSB MSB LSB

**Figure 20 — REQB/WUPB Command format**


© ISO/IEC 2001 – All rights reserved

IPR2025-01232
Apple EX1016 Page 63

### 7.7.2 Coding of Anticollision Prefix byte APf

The Anticollision Prefix byte is APf = ‘05’ = (0000 0101)b.

### 7.7.3 Coding of AFI

AFI (Application Family Identifier) represents the type of application targeted by the PCD and is used to preselect PICCs before the ATQB. Only PICCs with applications of the type indicated by the AFI may answer to a REQB/WUPB Command with AFI different to ‘00’.

When AFI equals ‘00’, all PICCs shall process the REQB/WUPB.

The most significant half byte of AFI is used to code one specific or all application families, as defined in Table 12.

The least significant half byte of AFI is used to code one specific or all application sub-families. Sub-family codes different from 0 are proprietary.

**Table 12 — AFI coding**

| AFI Most Significant half byte | AFI Least Significant half byte | Meaning – PICCs respond from | Examples / Note |
|---|---|---|---|
| ‘0’ | ‘0’ | All families and sub-families | No application preselection |
| X | ‘0’ | All sub-families of family X | Wide application preselection |
| X | Y | Only the Yth sub-family of family X | |
| ‘0’ | Y | Proprietary sub-family Y only | |
| ‘1’ | ‘0’, Y | Transport | Mass transit, Bus, Airline,... |
| ‘2’ | ‘0’, Y | Financial | IEP, Banking, Retail,... |
| ‘3’ | ‘0’, Y | Identification | Access Control,... |
| ‘4’ | ‘0’, Y | Telecommunication | Public Telephony, GSM,... |
| ‘5’ | ‘0’, Y | Medical | |
| ‘6’ | ‘0’, Y | Multimedia | Internet services.... |
| ‘7’ | ‘0’, Y | Gaming | |
| ‘8’ | ‘0’, Y | Data Storage | Portable Files, ... |
| ‘9’-’F’ | ‘0’, Y | RFU | |

NOTE X = ‘1’ to ‘F’, Y = ‘1’ to ‘F’

### 7.7.4 Coding of PARAM

| b8 | b7 | b6 | b5 | b4 | b3 | b2 | b1 |
|---|---|---|---|---|---|---|---|
| RFU | | | | REQB / WUPB | N (Number of slots) | | |

All RFU bits shall be set to 0

**Figure 21 — Coding of PARAM**

b4 = 0 defines REQB: PICCs in IDLE State or READY State shall process this command
b4 = 1 defines WUPB: PICCs in IDLE State or READY State or HALT State shall process this command
b1, b2 and b3 are used to code the number of slots N according to Table 13.

© ISO/IEC 2001 – All rights reserved


IPR2025-01232
Apple EX1016 Page 64

**Table 13 — Coding of N**

| b3 | b2 | b1 | N |
|---|---|---|---|
| 0 | 0 | 0 | $1 = 2^0$ |
| 0 | 0 | 1 | $2 = 2^1$ |
| 0 | 1 | 0 | $4 = 2^2$ |
| 0 | 1 | 1 | $8 = 2^3$ |
| 1 | 0 | 0 | $16 = 2^4$ |
| 1 | 0 | 1 | RFU |
| 1 | 1 | x | RFU |

NOTE For each PICC, the probability of response (ATQB) in the first slot is 1/N. Thus, if the probabilistic approach is used in the PCD, N is not used to adjust the number of slots but the probability for the PICC to return its ATQB in this unique slot.

## 7.8 Slot-MARKER Command

After a REQB/WUPB Command, the PCD may send up to (N-1) Slot-MARKER Commands to define the start of each timeslot.

Slot-MARKER Commands can be sent:

— after the end of an ATQB message received by the PCD to mark the start of the next slot;

— or earlier if no ATQB is received (no need to wait until the end of a slot, if this slot is known to be empty).

It is not mandatory for a PICC to support this command. In this case, the PICC shall ignore any Slot-MARKER Command. The PICC may only send its ATQB after REQB (in the first slot) in a probabilistic approach.

### 7.8.1 Slot-MARKER Command format

Slot-MARKER Command has the following format:

| 1st byte | 2nd, 3rd bytes |
|---|---|
| **APn**<br>(1 byte) | **CRC_B**<br>(2 bytes) |

MSB LSB MSB LSB

**Figure 22 — Slot-MARKER Command format**

### 7.8.2 Coding of Anticollision Prefix byte APn

APn = (nnnn 0101)b where nnnn codes the slot number as defined in the Table 14.

**Table 14 — Coding of slot number**

| nnnn | Slot number |
|---|---|
| 0001 | 2 |
| 0010 | 3 |
| 0011 | 4 |
| ……. | ……. |
| 1110 | 15 |
| 1111 | 16 |

NOTE It is not mandatory that the Slot-MARKER Commands are sent sequentially with incremental slot numbers.


© ISO/IEC 2001 – All rights reserved

IPR2025-01232
Apple EX1016 Page 65

## 7.9 ATQB Response

The response to both REQB/WUPB and Slot-MARKER Commands is named ATQB.

### 7.9.1 ATQB Response format

ATQB Response has the following format:

| 1st byte | 2nd, 3rd, 4th, 5th bytes | 6th, 7th, 8th, 9th, bytes | 10th, 11th, 12th, bytes | 13th, 14th bytes |
|---|---|---|---|---|
| **'50'** (1 byte) | **PUPI** (4 bytes) | **Application Data** (4 bytes) | **Protocol Info** (3 bytes) | **CRC_B** (2 bytes) |
| MSB LSB | MSB LSB | MSB LSB | MSB LSB | MSB LSB |

**Figure 23 — ATQB Response format**

### 7.9.2 PUPI (Pseudo-Unique PICC Identifier)

A Pseudo-Unique PICC Identifier (PUPI) is used to differentiate PICCs during anticollision. This 4-byte number may be either a number dynamically generated by the PICC or a diversified fixed number. The PUPI may only change in the IDLE State.

### 7.9.3 Application Data

The Application data field is used to inform the PCD which applications are currently installed in the PICC. This information allows the PCD to select the desired PICC in the presence of more than one PICC.

The application data is defined dependent upon the ADC (Application Data Coding) field in the Protocol Info (see 7.9.4.), which defines if either the CRC_B compressing method described below or proprietary coding is used.

When the CRC_B compressing coding is used, Application Data field contains the following:

| 1st byte | 2nd, 3rd bytes | 4th byte |
|---|---|---|
| AFI (1 byte) | CRC_B(AID) (2 bytes) | Numbers of Applications (1 byte) |
| MSB LSB | MSB LSB | MSB LSB |

**Figure 24 — Application Data format**

#### 7.9.3.1 AFI

For mono application PICCs AFI gives the family of the application (see AFI coding in Table 12).

For multi application PICCs AFI gives the family of the application described in CRC_B(AID).

#### 7.9.3.2 CRC_B(AID)

CRC_B(AID) is the result of calculation of CRC_B of the AID (as defined in ISO/IEC 7816-5) of an application in the PICC matching the AFI given in the REQB/WUPB Command.

#### 7.9.3.3 Numbers of Applications

Indicates on presence of other applications in the PICC.

The most significant half byte value gives the number of applications corresponding to the AFI given in Application Data with '0' meaning no application and 'F' meaning 15 applications or more.

© ISO/IEC 2001 – All rights reserved


IPR2025-01232
Apple EX1016 Page 66

The least significant half byte value gives the total number of applications in the PICC with ‘0’ meaning no application and ‘F’ meaning 15 applications or more.

### 7.9.4 Protocol Info

The Protocol Info field indicates the parameters supported by the PICC. It is formatted as detailed below.

| 1st byte | 2nd byte | | 3rd byte | | |
|---|---|---|---|---|---|
| **Bit_Rate_capability** (8 bits) | **Max_Frame_Size** (4 bits) | **Protocol_Type** (4 bits) | **FWI** (4 bits) | **ADC** (2 bits) | **FO** (2 bit) |
| MSB LSB | MSB | LSB | MSB | | LSB |

**Figure 25 — Protocol Info format**

#### 7.9.4.1 FO

**Table 15 — Frame Option supported by the PICC**

| b2 | b1 | Meaning |
|---|---|---|
| 1 | x | NAD supported by the PICC |
| x | 1 | CID supported by the PICC |

#### 7.9.4.2 ADC

**Table 16 — Application Data Coding supported by the PICC**

| b4 | b3 | Meaning |
|---|---|---|
| 0 | 0 | Application is proprietary |
| 0 | 1 | Application is coded as described in 7.9.3. |
| Other values are RFU | | |

#### 7.9.4.3 FWI

Frame Waiting time Integer (4 bits):

FWI codes an integer value used to define the FWT.

The FWT defines the maximum time for a PICC to start its response after the end of a PCD frame.

FWT is calculated by the formula:

$$FWT = (256 \times 16/fc) \times 2^{FWI}$$

where the value of FWI has the range from 0 to 14 and the value of 15 is RFU.

For FWI = 0, FWT is minimal (~ 302 µs);

For FWI = 14, FWT is maximal (~ 4949 ms).


© ISO/IEC 2001 – All rights reserved

IPR2025-01232
Apple EX1016 Page 67

#### 7.9.4.4 Protocol_Type

**Table 17 — Protocol Types supported by the PICC**

| b4 | b3 | b2 | b1 | Meaning |
|---|---|---|---|---|
| 0 | 0 | 0 | 1 | PICC compliant with ISO/IEC 14443-4 |
| 0 | 0 | 0 | 0 | PICC not compliant with ISO/IEC 14443-4 |
| Other values are RFU. | | | | |

#### 7.9.4.5 Max_Frame_Size

**Table 18 — Maximum frame size**

| Maximum Frame Size Code in ATQB | 0 | 1 | 2 | 3 | 4 | 5 | 6 | 7 | 8 | 9-F |
|---|---|---|---|---|---|---|---|---|---|---|
| Maximum Frame Size (bytes) | 16 | 24 | 32 | 40 | 48 | 64 | 96 | 128 | 256 | RFU > 256 |

#### 7.9.4.6 Bit_Rate_capability

**Table 19 — Bit rates supported by the PICC**

| b8 | b7 | b6 | b5 | b4 | b3 | b2 | b1 | Meaning |
|---|---|---|---|---|---|---|---|---|
| 0 | 0 | 0 | 0 | 0 | 0 | 0 | 0 | PICC supports only 106 kbit/s in both directions |
| 1 | x | x | x | 0 | x | x | x | Same bit rate from PCD to PICC and from PICC to PCD compulsory |
| x | x | x | 1 | 0 | x | x | x | PICC to PCD, 1etu = 64 / *fc*, bit rate supported is 212 kbit/s |
| x | x | 1 | x | 0 | x | x | x | PICC to PCD, 1etu = 32 / *fc*, bit rate supported is 424 kbit/s |
| x | 1 | x | x | 0 | x | x | x | PICC to PCD, 1etu = 16 / *fc*, bit rate supported is 847 kbit/s |
| x | x | x | x | 0 | x | x | 1 | PCD to PICC, 1etu = 64 / *fc*, bit rate supported is 212 kbit/s |
| x | x | x | x | 0 | x | 1 | x | PCD to PICC, 1etu = 32 / *fc*, bit rate supported is 424 kbit/s |
| x | x | x | x | 0 | 1 | x | x | PCD to PICC, 1etu = 16 / *fc*, bit rate supported is 847 kbit/s |
| Other values (with b4 = 1) are RFU. | | | | | | | | |

## 7.10 ATTRIB Command

The ATTRIB Command sent by the PCD shall include information required to select a single PICC.

A PICC receiving an ATTRIB Command with its identifier becomes selected and assigned to a dedicated channel. After being selected, this PICC only responds to commands defined in ISO/IEC 14443-4 which include its unique CID.

### 7.10.1 ATTRIB Command format

ATTRIB Command has the following format:

| 1st byte | 2nd, 3rd, 4th, 5th bytes | 6th byte | 7th byte | 8th byte | 9th byte | 10th,…….bytes | |
|---|---|---|---|---|---|---|---|
| **'1D'** (1 byte) | **Identifier** (4 bytes) | **Param 1** (1 byte) | **Param 2** (1 byte) | **Param 3** (1 byte) | **Param 4** (1 byte) | **Higher layer - INF** (optional – 0 or more bytes) | **CRC_B** (2 bytes) |

MSB LSB MSB LSB MSB LSB MSB LSB MSB LSB MSB LSB MSB LSB MSB LSB

**Figure 26 — ATTRIB Command format**

© ISO/IEC 2001 – All rights reserved


IPR2025-01232
Apple EX1016 Page 68

### 7.10.2 Identifier

This identifier is the value of the PUPI sent by the PICC in the ATQB.

### 7.10.3 Coding of Param 1

| b8 | b7 | b6 | b5 | b4 | b3 | b2 | b1 |
|---|---|---|---|---|---|---|---|
| Minimum TR0 | | Minimum TR1 | | EOF | SOF | RFU | |

All RFU bits shall be set to 0 if not otherwise specified

**Figure 27 — Coding of Param 1**

#### 7.10.3.1 Minimum TR0

Minimum TR0 indicates to the PICC the minimum delay before responding after the end of a command sent by a PCD. The default value has been defined in ISO/IEC 14443-2, 9.2.5.

**Table 20 — Minimum TR0 coding**

| b8 | b7 | Minimum TR0 |
|---|---|---|
| 0 | 0 | default value |
| 0 | 1 | 48/*fs* |
| 1 | 0 | 16/*fs* |
| 1 | 1 | RFU |

NOTE Minimum TR0 is required by the PCD when switching from transmit to receive and its value depends on the PCD performance.

#### 7.10.3.2 Minimum TR1

Minimum TR1 indicates to the PICC the minimum delay between subcarrier modulation start and beginning of data transmission. The default value has been defined in ISO/IEC 14443-2, 9.2.5.

**Table 21 — Minimum TR1 coding**

| b6 | b5 | Minimum TR1 |
|---|---|---|
| 0 | 0 | default value |
| 0 | 1 | 64/*fs* |
| 1 | 0 | 16/*fs* |
| 1 | 1 | RFU |

NOTE Minimum TR1 is required by the PCD for synchronization with the PICC and its value depends on the PCD performance.


© ISO/IEC 2001 – All rights reserved

IPR2025-01232
Apple EX1016 Page 69

#### 7.10.3.3 EOF/SOF

b3 and b4 indicate the PCD capability to support suppression of the EOF and/or SOF from PICC to PCD, which may reduce communication overhead. The suppression of EOF and/or SOF is optional for the PICC. The coding of b3 and b4 is as follows:

**Table 22 — SOF handling**

| b3 | SOF required |
|---|---|
| 0 | Yes |
| 1 | No |

**Table 23 — EOF handling**

| b4 | EOF required |
|---|---|
| 0 | Yes |
| 1 | No |

### 7.10.4 Coding of Param 2

The least significant half byte (b4 to b1) is used to code the maximum frame size that can be received by the PCD as specified in Table 24.

**Table 24 — Coding of b4 to b1 of Param 2**

| Maximum Frame Size Code in ATTRIB | 0 | 1 | 2 | 3 | 4 | 5 | 6 | 7 | 8 | 9-F |
|---|---|---|---|---|---|---|---|---|---|---|
| Maximum Frame Size (bytes) | 16 | 24 | 32 | 40 | 48 | 64 | 96 | 128 | 256 | RFU > 256 |

The most significant half byte (b8 to b5) is used for bit rate selection, as specified in Tables 25 and 26.

**Table 25 — Coding of b6 & b5 of Param 2**

| b6 | b5 | Meaning |
|---|---|---|
| 0 | 0 | PCD to PICC, 1etu = 128 / *fc*, bit rate is 106 kbit/s |
| 0 | 1 | PCD to PICC, 1etu = 64 / *fc*, bit rate is 212 kbit/s |
| 1 | 0 | PCD to PICC, 1etu = 32 / *fc*, bit rate is 424 kbit/s |
| 1 | 1 | PCD to PICC, 1etu = 16 / *fc*, bit rate is 847 kbit/s |

**Table 26 — Coding of b8 & b7 of Param 2**

| b8 | b7 | Meaning |
|---|---|---|
| 0 | 0 | PICC to PCD, 1etu = 128 / *fc*, bit rate is 106 kbit/s |
| 0 | 1 | PICC to PCD, 1etu = 64 / *fc*, bit rate is 212 kbit/s |
| 1 | 0 | PICC to PCD, 1etu = 32 / *fc*, bit rate is 424 kbit/s |
| 1 | 1 | PICC to PCD, 1etu = 16 / *fc*, bit rate is 847 kbit/s |

### 7.10.5 Coding of Param 3

The least significant half byte (b4 to b1) is used for confirmation of the protocol type as specified in Table 17.

The most significant half byte (b8 to b5) is set to (0000)b, all other values are RFU.

© ISO/IEC 2001 – All rights reserved


IPR2025-01232
Apple EX1016 Page 70

### 7.10.6 Coding of Param 4

The Param 4 byte consists of two parts:

— the least significant half byte (b4 to b1) is named Card Identifier (CID) and defines the logical number of the addressed PICC in the range from 0 to 14. The value 15 is RFU. The CID is specified by the PCD and shall be unique for each active PICC. If the PICC does not support CID, code value (0000)b shall be used;

— the most significant half byte (b8 to b5) is set to (0000)b, all other values are RFU.

### 7.10.7 Higher layer INF

Any higher layer command transferable as the INF field of ISO/IEC 14443-4 may be included.

It is not mandatory for the PICC to process successfully any command in this context.

The PICC shall however process successfully such message if no application command is included.

## 7.11 Answer to ATTRIB Command

The PICC shall answer to any valid ATTRIB Command (correct PUPI and valid CRC_B) with the format described below.

| 1st byte | | 2nd ……bytes | |
|---|---|---|---|
| **MBLI** | **CID** | **Higher layer Response** | **CRC_B** |
| (1 byte) | | (optional 0 or more bytes) | (2 bytes) |
| MSB LSB | | MSB LSB | MSB LSB |

**Figure 28 — Format of the Answer to an ATTRIB Command**

The first byte consists of two parts:

— the least significant half byte (b4 to b1) contains the returned CID. If the PICC does not support CID, code value (0000)b is returned;

— the most significant half byte (b8 to b5) is called the Maximum Buffer Length Index (MBLI). It is used by the PICC to let the PCD know the limit of its internal buffer to received chained frames. The coding of MBLI is as follows:

  — MBLI = 0 means that the PICC provides no information on its internal input buffer size;

  — MBLI > 0 is used to calculate the actual internal maximum buffer length (MBL) according to the following formula: MBL = (PICC Maximum Frame Size)* $2^{(MBLI-1)}$ where the PICC maximum frame size is returned by the PICC in its ATQB. When it send chained frames to a PICC, the PCD shall ensure that the accumulated length is never greater than MBL.

Remaining bytes are optional and used for higher layer response.


© ISO/IEC 2001 – All rights reserved

IPR2025-01232
Apple EX1016 Page 71

As illustrated below, a PICC shall answer the empty (no higher layer INF field) ATTRIB Command with an empty higher layer response:

| 1st byte | | 2nd, 3rd bytes |
|---|---|---|
| **MBLI** | **CID** | **CRC_B** |
| (1 byte) | | (2 bytes) |

MSB LSB MSB LSB

**Figure 29 — PICC Answer to ATTRIB format without higher layer response**

NOTE 1 A valid Answer (same CID and valid CRC_B) to an ATTRIB Command (as defined in Figure 28 or 29) is the means for a PCD to verify that PICC selection has been successful.

NOTE 2 Higher layer response indicating that the higher layer command is not supported by the PICC within this context is allowed as long as the PICC response meets the format described above.

## 7.12 HLTB Command and Answer

The HLTB Command is used to set a PICC in HALT State and stop responding to a REQB.

After answering to this command the PICC shall ignore any commands except the WUPB Command (see 7.7)

HLTB Command has the following format:

| 1st byte | 2nd, 3rd, 4th, 5th bytes | 6th, 7th bytes |
|---|---|---|
| **'50'** (1 byte) | **Identifier** (4 bytes) | **CRC_B** (2 bytes) |

MSB LSB MSB LSB MSB LSB

**Figure 30 — Format of the HLTB Command**

The 4 bytes identifier is the value of the PUPI sent by the PICC in the ATQB.

The format of Answer to a HLTB Command from the PICC is as follows:

| 1st byte | 2nd, 3rd bytes |
|---|---|
| **'00'** (1 byte) | **CRC_B** (2 bytes) |

MSB LSB MSB LSB

**Figure 31 — Format of PICC Answer to HLTB Command**

© ISO/IEC 2001 – All rights reserved


IPR2025-01232
Apple EX1016 Page 72

# Annex A
(informative)

## Communication example Type A

This example shows the select sequence with 2 PICCs in the field on the assumption of:

— PICC #1 with UID size: single, value of uid0 is ‘10’;

— PICC #2 with UID size: double.

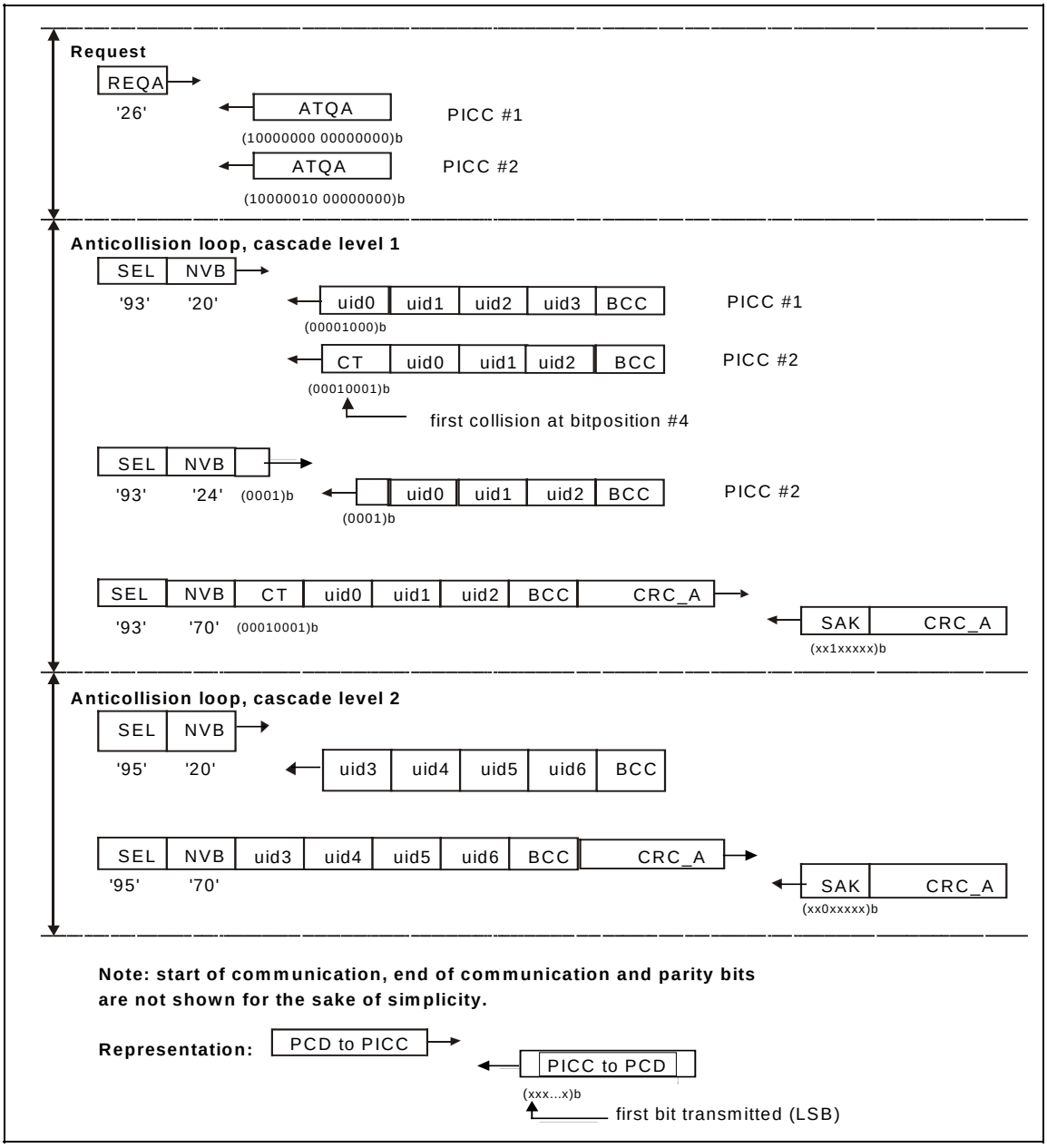


**Figure A.1 — Select sequence with bit frame anticollision**


© ISO/IEC 2001 – All rights reserved

IPR2025-01232
Apple EX1016 Page 73

**Explanations to Figure A.1**:

| | |
|---|---|
| Request | — PCD transmits the REQA Command<br>— All PICCs respond with their ATQA:<br>  — PICC #1 indicates bit frame anticollision and UID size: single;<br>  — PICC #2 indicates bit frame anticollision and UID size: double. |
| Anticollision loop, cascade level 1 | — PCD transmits an ANTICOLLISION Command:<br>— SEL specifies bit frame anticollision and cascade level 1;<br>— the value ‘20’ of NVB specifies that the PCD will transmit no part of UID CL1;<br>— consequently all PICCs in the field respond with their complete UID CL1;<br>— due to the value ‘88’ of the cascade tag, the first collision occurs at bit position #4;<br>— PCD transmits another ANTICOLLISION Command that includes the first 3 bits of UID CL1 that were received before the collision occurs, followed by a (1)b. Consequently the PCD assigns NVB with the value ‘24’;<br>— these 4 bits correspond to the first bits of UID CL1 of PICC #2;<br>— PICC #2 responds with its 36 remaining bits of UID CL1. Since PICC #1 does not respond, no collision occurs;<br>— since the PCD "knows" all bits of UID CL1 of PICC #2, it transmits a SELECT Command for PICC #2;<br>— PICC #2 responds with SAK, indicating that UID is not complete;<br>— consequently, the PCD increases the cascade level. |
| Anticollision loop, cascade level 2 | — PCD transmits another ANTICOLLISION Command:<br>— SEL specifies bit frame anticollision and cascade level 2;<br>— NVB is reset to ‘20’ to force PICC #2 to respond with its complete UID CL2;<br>— PICC #2 responds with all 40 bits of its UID CL2;<br>— PCD transmits the SELECT Command for PICC #2, cascade level 2;<br>— PICC #2 responds with SAK, indicating that UID is complete, and transits from READY State to ACTIVE State. |

© ISO/IEC 2001 – All rights reserved


IPR2025-01232
Apple EX1016 Page 74

# Annex B
(informative)

# CRC_A and CRC_B encoding

## CRC_A encoding

This annex is provided for explanatory purposes and indicates the bit patterns that will exist in the physical layer. It is included for the purpose of checking an ISO/IEC 14443-3 Type A implementation of CRC_A encoding.

The process of encoding and decoding may be conveniently carried out by a 16-stage cyclic shift register with appropriate feedback gates. According to ITU-T Recommendation V.41, ANNEX I, figures I-1/V.41 and I-2/V.41 the flip-flops of the register shall be numbered from FF0 to FF15. FF0 shall be the leftmost flip-flop where data is shifted in. FF15 shall be the rightmost flip-flop where data is shifted out.

Table B.1 defines the initial content of the register.

**Table B.1 — Initial content of 16-stage shift register according to value ‘6363’**

| FF0 | FF1 | FF2 | FF3 | FF4 | FF5 | FF6 | FF7 | FF8 | FF9 | FF10 | FF11 | FF12 | FF13 | FF14 | FF15 |
|---|---|---|---|---|---|---|---|---|---|---|---|---|---|---|---|
| 0 | 1 | 1 | 0 | 0 | 0 | 1 | 1 | 0 | 1 | 1 | 0 | 0 | 0 | 1 | 1 |

Consequently, FF0 corresponds to the MSB and FF15 to the LSB.

**Examples of bit patterns that will be transmitted via standard frames**

EXAMPLE 1 Transmission of data, first byte = ‘00’, second byte = ‘00’, CRC_A appended.

Calculated CRC_A = ‘1EA0’

First bit transmitted
↓

| | | | | | | | | | |
|---|---|---|---|---|---|---|---|---|---|
| S | 0000 0000 | 1 | 0000 0000 | 1 | 0000 0101 | 1 | 0111 1000 | 1 | E |
| | ‘00’ | P | ‘00’ | P | ‘A0’ | P | ‘1E’ | P | |

**Figure B.1 — Example 1 for CRC_A encoding**

**Table B.2 — Content of 16-stage shift register according to value ‘1EA0’**

| FF0 | FF1 | FF2 | FF3 | FF4 | FF5 | FF6 | FF7 | FF8 | FF9 | FF10 | FF11 | FF12 | FF13 | FF14 | FF15 |
|---|---|---|---|---|---|---|---|---|---|---|---|---|---|---|---|
| 0 | 0 | 0 | 1 | 1 | 1 | 1 | 0 | 1 | 0 | 1 | 0 | 0 | 0 | 0 | 0 |

EXAMPLE 2 Transmission of data block, first byte = ‘12’, second byte = ‘34’, CRC_A appended.

Calculated CRC_A = ‘CF26’

First bit transmitted
↓

| | | | | | | | | | |
|---|---|---|---|---|---|---|---|---|---|
| S | 0100 1000 | 1 | 0010 1100 | 0 | 0110 0100 | 0 | 1111 0011 | 1 | E |
| | ‘12’ | P | ‘34’ | P | ‘26’ | P | ‘CF’ | P | |

**Figure B.2 — Example 2 for CRC_A encoding**


© ISO/IEC 2001 – All rights reserved

IPR2025-01232
Apple EX1016 Page 75

**Table B.3 — Content of 16-stage shift register according to value ‘CF26’**

| FF0 | FF1 | FF2 | FF3 | FF4 | FF5 | FF6 | FF7 | FF8 | FF9 | FF10 | FF11 | FF12 | FF13 | FF14 | FF15 |
|---|---|---|---|---|---|---|---|---|---|---|---|---|---|---|---|
| 1 | 1 | 0 | 0 | 1 | 1 | 1 | 1 | 0 | 0 | 1 | 0 | 0 | 1 | 1 | 0 |

**CRC_B encoding**

This annex is provided for explanatory purposes and indicates the bit patterns that will exist in the physical layer. It is included for the purpose of checking an ISO/IEC 14443-3 Type B implementation of CRC_B encoding. Refer to ISO/IEC 13239 and CCITT X.25 #2.2.7 and V.42 #8.1.1.6.1 for further details.

Initial Value = 'FFFF'

**Examples of bit patterns that will be transmitted via standard frames**

EXAMPLE 1 Transmission of first byte = ‘00’, second byte = ‘00’, third byte = ‘00’, CRC_B appended.

Calculated CRC_B = ‘C6CC’

| | | **1st byte** | **2nd byte** | **3rd byte** | **CRC_B** | | |
|---|---|---|---|---|---|---|---|
| Frame = | SOF | '00' | '00' | '00' | 'CC' | 'C6' | EOF |

**Figure B.3 — Example 1 for CRC_B encoding**

EXAMPLE 2 Transmission of first byte = ‘0F’, second byte = ‘AA’, third byte = ‘FF’, CRC_B appended.

Calculated CRC_B = ‘D1FC’

| | | **1st byte** | **2nd byte** | **3rd byte** | **CRC_B** | | |
|---|---|---|---|---|---|---|---|
| Frame = | SOF | '0F' | 'AA' | 'FF' | 'FC' | 'D1' | EOF |

**Figure B.4 — Example 2 for CRC_B encoding**

EXAMPLE 3 Transmission of first byte = ‘0A’, second byte = ‘12’, third byte = ‘34’, fourth byte = '56', CRC_B appended.

Calculated CRC_B = ‘F62C’

| | | **1st byte** | **2nd byte** | **3rd byte** | **4th byte** | **CRC_B** | | |
|---|---|---|---|---|---|---|---|---|
| Frame = | SOF | '0A' | '12' | '34' | '56' | '2C' | 'F6' | EOF |

**Figure B.5 — Example 3 for CRC_B encoding**

© ISO/IEC 2001 – All rights reserved


IPR2025-01232
Apple EX1016 Page 76

**Code sample written in C language for CRC calculation**

```
#include <stdio.h>
#include <stdlib.h>
#include <string.h>
#include <ctype.h>

#define CRC_A 1
#define CRC_B 2
#define BYTE unsigned char

unsigned short UpdateCrc(unsigned char ch, unsigned short *lpwCrc)
{
  ch = (ch^(unsigned char)((*lpwCrc) & 0x00FF));

  ch = (ch^(ch<<4));

  *lpwCrc = (*lpwCrc >> 8)^((unsigned short)ch << 8)^((unsigned short)ch<<3)^((unsigned short)ch>>4);

  return(*lpwCrc);
}

void ComputeCrc(int CRCType, char *Data, int Length,
  BYTE *TransmitFirst, BYTE *TransmitSecond)
{
  unsigned char chBlock;
  unsigned short wCrc;

  switch(CRCType) {
    case CRC_A:
      wCrc = 0x6363;  /* ITU-V.41 */
      break;
    case CRC_B:
      wCrc = 0xFFFF;  /* ISO/IEC 13239 (formerly ISO/IEC 3309) */
      break;
    default:
      return;
  }

  do {
    chBlock = *Data++;
    UpdateCrc(chBlock, &wCrc);
  } while (--Length);
  if (CRCType == CRC_B)
    wCrc = ~wCrc; /* ISO/IEC 13239 (formerly ISO/IEC 3309) */

  *TransmitFirst = (BYTE) (wCrc & 0xFF);
  *TransmitSecond = (BYTE) ((wCrc >> 8) & 0xFF);

  return;
}

BYTE BuffCRC_A[10] = {0x12, 0x34};
BYTE BuffCRC_B[10] = {0x0A, 0x12, 0x34, 0x56};
unsigned short Crc;
BYTE First, Second;
FILE *OutFd;
int i;
```


© ISO/IEC 2001 – All rights reserved

IPR2025-01232
Apple EX1016 Page 77

```
int main(void)
{
  printf("CRC-16 reference results ISO/IEC 14443-3\n");
  printf("Crc-16 G(x) = x^16 + x^12 + x^5 + 1\n\n");
  printf("CRC_A of [ ");
  for(i=0; i<2; i++) printf("%02X ",BuffCRC_A[i]);
  ComputeCrc(CRC_A, BuffCRC_A, 2, &First, &Second);
  printf("] Transmitted: %02X then %02X.\n", First, Second);
  printf("CRC_B of [ ");
  for(i=0; i<4; i++) printf("%02X ",BuffCRC_B[i]);
  ComputeCrc(CRC_B, BuffCRC_B, 4, &First, &Second);
  printf("] Transmitted: %02X then %02X.\n", First, Second);

  return(0);
}
```

© ISO/IEC 2001 – All rights reserved


IPR2025-01232
Apple EX1016 Page 78

# Annex C
(informative)

# Type A timeslot – Initialization and anticollision

This annex describes the timeslot detection protocol applicable for PICCs of Type A. A PCD supporting Polling for both of Type A and Type B is not required to support this detection protocol as a mandatory anticollision protocol as described in clause 5.

## C.1 Terms and abbreviations

The following are specific to this section of ISO/IEC 14443-3.

| | |
|---|---|
| ATQA_t | Answer To reQuest of Type A_ timeslot |
| ATQ-ID | Answer To REQ-ID |
| CID_t | Card IDentifier of Type A_timeslot |
| HLTA_t | HALT Command of Type A_timeslot |
| REQA_t | REQuest Command of Type A_timeslot |
| REQ-ID | REQuest-ID Command |
| SAK_t | Select AKnowledge of Type A_timeslot |
| SEL_t | SELect Command of Type A_timeslot |

## C.2 Timing and frame format

### C.2.1 Timing definitions

**Polling reset time**
Polling reset times of Type A_timeslot are equal to those of Type A in clause 5.

**Time interval from REQA_t to ATQA_t**
PICC returns ATQA_t after waiting for 32+/-2 etu upon receiving REQA_t. The PCD may not recognize the coding of the ATQA_t.

**Request Guard Time**
The Request Guard Time is defined as the minimum time between the start of bits of two consecutive Request commands. Its value shall be 0,5 ms.

**Frame Guard Time**
The Frame Guard Time is defined as the minimum time between the rising edge of the last bit and the falling edge of the start bit of two consecutive frames in opposite direction. Its value shall be 10 etu.

**Timeslot length**
The first timeslot starts in 32 etu after REQ-ID. Each timeslot length is 104 etu consisting of 94 etu for ATQ-ID reception and 10 etu frame guard time succeeding.

### C.2.2 Frame formats

**REQA_t frame**
See 6.1.5.1 and table 2. The data content is ‘35’ for a REQA_t.

**Standard frame**
The LSB of each byte is transmitted first. Each byte has no parity. CRC_B is defined in 7.2.


© ISO/IEC 2001 – All rights reserved

IPR2025-01232
Apple EX1016 Page 79

| | | | | | | |
|---|---|---|---|---|---|---|
| S | data: n *(8 data bits +no parity) | | | | CRC_B 2 bytes | E |
| | 1byte command or response | (0 or 1byte) (parameter 1) | (0 or 1 byte) (parameter 2) | (0 or 8 bytes) (UID) | | |

**C.3 PICC states**

The following clauses provide the states for a PICC, Type A_timeslot.

**POWER-OFF State**
In the POWER-OFF State, the PICC is not energized due to lack of carrier and shall not emit subcarrier.

**IDLE State**
This state is entered after the field has been active within a 5 ms delay. The PICC recognizes REQA_t.

**READY State**
This state is entered by REQA_t. The PICC recognizes REQA_t, REQ-ID and SEL_t.

**ACTIVE State**
This state has two substates. The first sub-state is entered by SEL_t with its complete UID and CID_t. In this sub-state, the PICC recognizes HLTA_t and proprietary higher layer commands. The second sub-state is in ISO/IEC 14443-4 and entered from the first sub-state by a command defined in ISO/IEC 14443-4.

**HALT State**
This state is entered by HLTA_t from ACTIVE State. In this state, the PICC is mute.

**C.4 Command/response set**

Four sets of command and response are used.

| Type | Name | Coding (b8-b1) | Meaning |
|---|---|---|---|
| command | REQA_t | (b7-b1)<br>(0110101)b (=‘35’) | Request PICC Type A timeslot to answer ATQA_t. |
| Response | ATQA_t | any one-byte content of ‘00’ to ‘FF’ | Answer to REQA_t. PCD can recognize the existence of Type A timeslot PICC. However, the PCD is not required to recognize the coding of the ATQA_t |
| command | REQ-ID | (00001000)b (= ‘08’) | Request the PICC to answer its UID to one of timeslots. REQ-ID is followed by two parameters |
| Response | ATQ-ID | (00000110)b (= ‘06’) | Answer 8-byte UID to one of 4 timeslots. ATQ-ID is followed by its 8-byte UID |
| command | SEL_t | (01000NNN)b, (NNN=CID_t No.(0-7))<br>(01100NNN)b, (NNN+8=CID_t No.(8-15)) | Select the PICC with its UID and set the CID_t<br>SEL_t is followed by 8-byte UID |
| Response | SAK_t | b8-b5 (1000)b: Additional information available in protocols<br>b8-b5 (1100)b: Default mode in protocols<br>b4-b1(0000)b: Other than ISO/IEC 14443-4<br>b4-b1(0001)b: PICC supports ISO/IEC 14443-4 | Acknowledge SEL_t |
| command | HLTA_t | (00011NNN)b, (NNN=CID_t No.(0-7))<br>(00111NNN)b, (NNN+8=CID_t No.(8-15)) | Halt the PICC with its CID_t |
| Response | Answer to HLTA_t | (00000110)b (= ‘06’) | Acknowledge HLTA_t |

© ISO/IEC 2001 – All rights reserved


IPR2025-01232
Apple EX1016 Page 80

IPR2025-01232
Apple EX1016 Page 81



Parameters of REQ-ID Command

| Parameters | | Meaning |
|---|---|---|
| P1 | b8-b7 | Timeslot length, b7=1: for 8-byte UID, b8=0 |
| | b6-b1 | Number of timeslots,.b3=1:for 4 timeslots, Others=0 |
| P2 | | '00' |

### C.5 Timeslot anticollision sequence

The flow chart of PICC anticollision sequence is shown as below in Figure C.1.

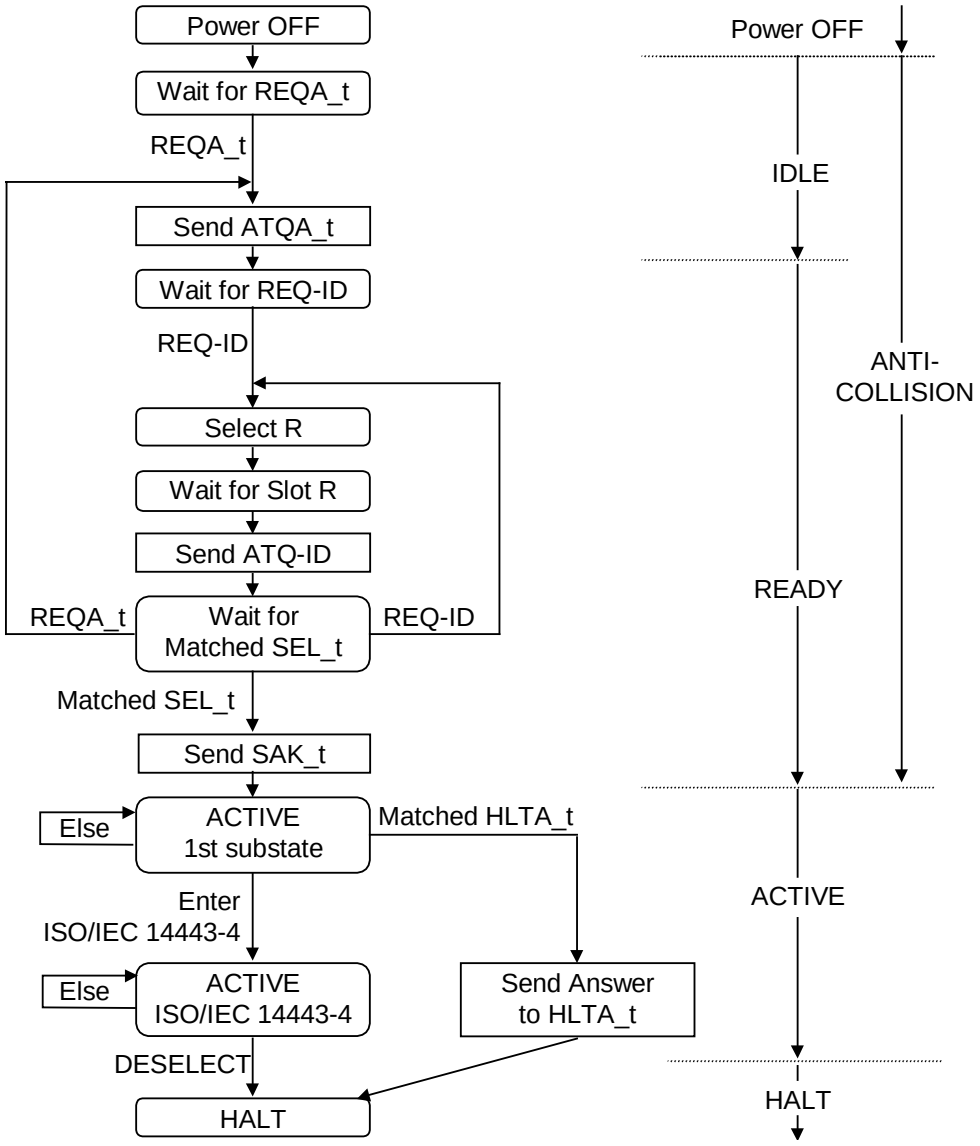


**Figure C.1 — Flow chart of PICC anticollision sequence**


© ISO/IEC 2001 – All rights reserved

# Annex D
(informative)

## Type B - Example of Anticollision Sequence

NOTE Type B anticollision is a flexible set of commands to allow the anticollision strategy to be developed for the application.

**PCD** **PICCs**

**PCD**

Start of anticollision Sequence
Transport Application, AFI = `10‘
Number of slot, N = 1

Transmit `REQB ‘

| APf | AFI | Param | CRC | CRC |
|---|---|---|---|---|
| 05 | 10 | 00 | xx | xx |

**PICC1**

Transport PICC
Matched AFI
N =1

Transmit `ATQB‘

**PICC2**

Medical PICC
Not Matched AFI
Wait for next REQB/WUPB

**PICC3**

Multi application PICC
Matched AFI
N = 1

Transmit `ATQB‘

**PCD**

Collision detected
Change Number of slots, N = 4

Transmit `REQB'

| APf | AFI | Param | CRC | CRC |
|---|---|---|---|---|
| 05 | 10 | 02 | xx | xx |

**PICC1**

Transport PICC
Matched AFI
Randomly selects R between 1 and N
R = 2, so waits for slot marker for slot 2

**PICC2**

Medical PICC
Not Matched AFI
Wait for next REQB/WUPB

Continued next page

© ISO/IEC 2001 – All rights reserved


IPR2025-01232
Apple EX1016 Page 82

**PICC3**

Multi application PICC
Matched AFI
Randomly selects R between 1 and N
R = 1, so transmit in slot 1

Transmit `ATQB‘

**PCD**

PCD has now a choice depending on its application… select the PICC3 and send no more slot marker, continue sending slot markers, or other possibilities.
For this example the PCD will continue to send slot markers.

Transmit slot marker for slot 2

| APn | CRC | CRC |
|---|---|---|
| 15 | xx | xx |

**PICC1**

Transport PICC
Matched AFI
R = 2, so transmit in slot 2

Transmit `ATQB‘

**PICC2**

Medical PICC
Waiting for next REQB/WUPB

**PICC3**

Multi application PICC
Waiting for HLTB or ATTRIB

**PCD**

The PCD now has two PICC responses
For this example the PCD will continue to send slot markers.

Transmit slot marker for slot 3, No response
Transmit slot marker for slot 4, No response

**PCD**

PCD application decides to select the transport PICC1 with the ATTRIB Command and may stop PICC3 with a HLTB Command



© ISO/IEC 2001 – All rights reserved

IPR2025-01232
Apple EX1016 Page 83

**ICS 35.240.15**

Price based on 48 pages

© ISO/IEC 2001 – All rights reserved

INTERNATIONAL STANDARD

# ISO/IEC 14443-4

First edition
2001-02-01

# Identification cards — Contactless integrated circuit(s) cards — Proximity cards —

## Part 4: Transmission protocol

*Cartes d'identification — Cartes à circuit(s) intégré(s) sans contact — Cartes de proximité —*

*Partie 4: Protocole de transmission*

Reference number
ISO/IEC 14443-4:2001(E)

© ISO/IEC 2001

IPR2025-01232
Apple EX1016 Page 86

**PDF disclaimer**

This PDF file may contain embedded typefaces. In accordance with Adobe's licensing policy, this file may be printed or viewed but shall not be edited unless the typefaces which are embedded are licensed to and installed on the computer performing the editing. In downloading this file, parties accept therein the responsibility of not infringing Adobe's licensing policy. The ISO Central Secretariat accepts no liability in this area.

Adobe is a trademark of Adobe Systems Incorporated.

Details of the software products used to create this PDF file can be found in the General Info relative to the file; the PDF-creation parameters were optimized for printing. Every care has been taken to ensure that the file is suitable for use by ISO member bodies. In the unlikely event that a problem relating to it is found, please inform the Central Secretariat at the address given below.

© ISO/IEC 2001

All rights reserved. Unless otherwise specified, no part of this publication may be reproduced or utilized in any form or by any means, electronic or mechanical, including photocopying and microfilm, without permission in writing from either ISO at the address below or ISO's member body in the country of the requester.

ISO copyright office
Case postale 56 • CH-1211 Geneva 20
Tel. + 41 22 749 01 11
Fax + 41 22 749 09 47
E-mail copyright@iso.ch
Web www.iso.ch

Printed in Switzerland



IPR2025-01232
Apple EX1016 Page 87

## Contents


1 Scope ... 1

2 Normative references ... 1

3 Terms and definitions ... 1

4 Symbols and abbreviated terms ... 2

5 Protocol activation of PICC Type A ... 4
5.1 Request for answer to select ... 6
5.2 Answer to select ... 6
5.2.1 Structure of the bytes ... 7
5.2.2 Length byte ... 7
5.2.3 Format byte ... 7
5.2.4 Interface byte TA(1) ... 8
5.2.5 Interface byte TB(1) ... 8
5.2.6 Interface byte TC(1) ... 9
5.2.7 Historical bytes ... 9
5.3 Protocol and parameter selection request ... 10
5.3.1 Start byte ... 10
5.3.2 Parameter 0 ... 11
5.3.3 Parameter 1 ... 11
5.4 Protocol and parameter selection response ... 12
5.5 Activation frame waiting time ... 12
5.6 Error detection and recovery ... 12
5.6.1 Handling of RATS and ATS ... 12
5.6.2 Handling of PPS request and PPS response ... 13
5.6.3 Handling of the CID during activation ... 13

6 Protocol activation of PICC Type B ... 14

7 Half-duplex block transmission protocol ... 14
7.1 Block format ... 15
7.1.1 Prologue field ... 15
7.1.2 Information field ... 17
7.1.3 Epilogue field ... 18
7.2 Frame waiting time ... 18
7.3 Frame waiting time extension ... 18
7.4 Power level indication ... 19
7.5 Protocol operation ... 20
7.5.1 Multi-Activation ... 20
7.5.2 Chaining ... 20
7.5.3 Block numbering rules ... 21
7.5.4 Block handling rules ... 21
7.5.5 Error detection and recovery ... 22

8 Protocol deactivation of PICC Type A and Type B ... 23
8.1 Deactivation frame waiting time ... 23
8.2 Error detection and recovery ... 23

**Annex A** (informative) **Multi-Activation example** ... 24

**Annex B** (informative) **Protocol scenarios** ... 25
B.1 Notation ... 25
B.2 Error-free operation ... 25
B.2.1 Exchange of I-blocks ... 25
B.2.2 Request for waiting time extension ... 26


© ISO/IEC 2001 – All rights reserved


IPR2025-01232
Apple EX1016 Page 88

**B.2.3 DESELECT** ..... **26**
**B.2.4 Chaining** ..... **26**
**B.3 Error handling** ..... **27**
**B.3.1 Exchange of I-blocks** ..... **27**
**B.3.2 Request for waiting time extension** ..... **28**
**B.3.3 DESELECT** ..... **30**
**B.3.4 Chaining** ..... **30**

**Annex C** (informative) **Block and frame coding overview** ..... **33**


© ISO/IEC 2001 – All rights reserved

IPR2025-01232
Apple EX1016 Page 89

## Foreword

ISO (the International Organization for Standardization) and IEC (the International Electrotechnical Commission) form the specialized system for worldwide standardization. National bodies that are members of ISO or IEC participate in the development of International Standards through technical committees established by the respective organization to deal with particular fields of technical activity. ISO and IEC technical committees collaborate in fields of mutual interest. Other international organizations, governmental and non-governmental, in liaison with ISO and IEC, also take part in the work.

International Standards are drafted in accordance with the rules given in the ISO/IEC Directives, Part 3.

In the field of information technology, ISO and IEC have established a joint technical committee, ISO/IEC JTC 1. Draft International Standards adopted by the joint technical committee are circulated to national bodies for voting. Publication as an International Standard requires approval by at least 75 % of the national bodies casting a vote.

International Standard ISO/IEC 14443-4 was prepared by Joint Technical Committee ISO/IEC JTC 1, *Information technology*, Subcommittee SC 17, *Identification cards and related devices*.

ISO/IEC 14443 consists of the following parts, under the general title *Identification cards — Contactless integrated circuit(s) cards — Proximity cards*:

— *Part 1: Physical characteristics*

— *Part 2: Radio frequency power and signal interface*

— *Part 3: Initialization and anticollision*

— *Part 4: Transmission protocol*

Annexes A, B and C of this part of ISO/IEC 14443 are for information only.

© ISO/IEC 2001 – All rights reserved


IPR2025-01232
Apple EX1016 Page 90

## Introduction

ISO/IEC 14443 is one of a series of International Standards describing the parameters for identification cards as defined in ISO/IEC 7810, and the use of such cards for international interchange.

The protocol as defined in this part of ISO/IEC 14443 is capable of transferring the application protocol data units as defined in ISO/IEC 7816-4. Thus application protocol data units may be mapped as defined in ISO/IEC 7816-4 and application selection may be used as defined ISO/IEC 7816-5.

ISO/IEC 14443 is intended to allow operation of proximity cards in the presence of other contactless cards conforming to ISO/IEC 10536 and ISO/IEC 15693.

The International Organization for Standardization (ISO) and International Electrotechnical Commission (IEC) draw attention to the fact that it is claimed that compliance with this part of ISO/IEC 14443 may involve the use of patents.

ISO and IEC take no position concerning the evidence, validity and scope of this patent right.

The holders of these patent rights have assured ISO and IEC that they are willing to negotiate licences under reasonable and non discriminatory terms and conditions with applicants throughout the world. In this respect, the statements of the holders of patent rights are registered with ISO and IEC. Information may be obtained from:

| | |
|---|---|
| US Patent US5359323 | FRANCE TELECOM<br>Centre National d'Etudes des Télécommunications<br>38-40 rue de Général Leclerc<br>92794 Issy-les-Molineaux<br>Cedex 9<br>France |
| | MOTOROLA<br>Motorola ESG<br>207 route de Ferney<br>P O Box 15<br>1218 Grand-Saconnex<br>Geneva<br>Switzerland |
| JP 2129209, JP 2561051, JP 2981517<br><br>Contactless Responding Unit | OMRON<br>Intellectual Property Department<br>Law & Intellectual Property H.Q.<br>20, Igadera Shimokaiinji<br>Nagaokakyo City<br>Kyoto 617-8510<br>Japan |
| Patent EP 0 492 569 B1<br><br>A system and method for the non-contact transmission of data. | ON-TRACK INNOVATIONS<br>Z.H.R. Industrial Zone<br>P O Box 32<br>Rosh-Pina 12000<br>Israel |


© ISO/IEC 2001 – All rights reserved

IPR2025-01232
Apple EX1016 Page 91

The following companies may hold patents relating to this part of ISO/IEC 14443 but have not provided details of the patents or agreed to provide licences.

| | |
|---|---|
| US 4 650 981 | WAYNE S FOLETTA<br>CA 95129, USA<br>4760 Castlewood Drive<br>San Jose, California CA 9512<br>USA |
| US Patent No. 4, 661,691 | JOHN W HALPERN<br>C/O Vincent M DeLuca<br>Rothwell, Figg, Ernst & Kurz, p.c.<br>555 Thirteenth Street, N.W.<br>Suite 701 East Tower<br>Washington, D.C. 20004 |
| WO 89 05549 A | MAGELLAN CORPORATION<br>8717 Research Drive<br>Irvine<br>CA 92618<br>USA |

Attention is drawn to the possibility that some of the elements of this part of ISO/IEC 14443 may be the subject of patent rights other than those identified above. ISO and IEC shall not be held responsible for identifying any or all such patent rights.

© ISO/IEC 2001 – All rights reserved


IPR2025-01232
Apple EX1016 Page 92

# Identification cards — Contactless integrated circuit(s) cards — Proximity cards — Part 4: Transmission protocol

## 1 Scope

This part of ISO/IEC 14443 specifies a half-duplex block transmission protocol featuring the special needs of a contactless environment and defines the activation and deactivation sequence of the protocol.

This part of ISO/IEC 14443 is intended to be used in conjunction with other parts of ISO/IEC 14443 and is applicable to proximity cards of Type A and Type B.

## 2 Normative references

The following normative documents contain provisions, which, through reference in this text, constitute provisions of this part of ISO/IEC 14443. For dated references, subsequent amendments to, or revisions of, any of these publications do not apply. However, parties to agreements based on this part of ISO/IEC 14443 are encouraged to investigate the possibility of applying the most recent editions of the normative documents indicated below. For undated references, the latest edition of the normative document referred to applies. Members of ISO and IEC maintain registers of currently valid International Standards.

ISO/IEC 7816-3, *Information technology – Identification cards – Integrated circuit(s) cards with contacts – Part 3: Electronic signals and transmission protocols*.

ISO/IEC 7816-4, *Information technology – Identification cards – Integrated circuit(s) cards with contacts – Part 4: Interindustry commands for interchange*.

ISO/IEC 7816-5, *Identification cards – Integrated circuit(s) cards with contacts – Part 5: Numbering system and registration procedure for application identifiers*.

ISO/IEC 14443-2, *Identification cards – Contactless integrated circuit(s) cards – Proximity cards – Part 2: Radio frequency power and signal interface*.

ISO/IEC 14443-3, *Identification cards – Contactless integrated circuit(s) cards – Proximity cards – Part 3: Initialization and anticollision*.

## 3 Terms and definitions

For the purposes of this part of ISO/IEC 14443, the following terms and definitions apply.

**3.1**
**bit duration**
one elementary time unit (etu), calculated by the following formula:

1 etu = 128 / (D x *fc*)

The initial value of the divisor D is 1, giving the initial etu as follows:

1 etu = 128 / *fc*

Where *fc* is the carrier frequency as defined in ISO/IEC 14443-2.

© ISO/IEC 2001 – All rights reserved


IPR2025-01232
Apple EX1016 Page 94

**3.2**
**block**
special type of frame, which contains a valid protocol data format

NOTE A valid protocol data format includes I-blocks, R-blocks or S-blocks.

**3.3**
**invalid block**
type of frame, which contains an invalid protocol format

NOTE A time-out, when no frame has been received, is not interpreted as an invalid block.

**3.4**
**frame**
sequence of bits as defined in ISO/IEC 14443-3

NOTE The PICC Type A uses the standard frame defined for Type A and the PICC Type B uses the frame defined for Type B.

## 4 Symbols and abbreviated terms

ACK positive ACKnowledgement

ATS Answer To Select

ATQA Answer To reQuest, Type A

ATQB Answer To reQuest, Type B

CID Card IDentifier

CRC Cyclic Redundancy Check, as defined for each PICC Type in ISO/IEC 14443-3

D Divisor

DR Divisor Receive (PCD to PICC)

DRI Divisor Receive Integer (PCD to PICC)

DS Divisor Send (PICC to PCD)

DSI Divisor Send Integer (PICC to PCD)

EDC Error Detection Code

etu elementary time unit

*fc* carrier frequency

FSC Frame Size for proximity Card

FSCI Frame Size for proximity Card Integer

FSD Frame Size for proximity coupling Device

FSDI Frame Size for proximity coupling Device Integer

FWI Frame Waiting time Integer


© ISO/IEC 2001 – All rights reserved

IPR2025-01232
Apple EX1016 Page 95

| | |
|---|---|
| FWT | Frame Waiting Time |
| $FWT_{TEMP}$ | temporary Frame Waiting Time |
| HLTA | HALT Command, Type A |
| I-block | Information block |
| INF | INformation Field |
| MAX | Index to define a maximum value |
| MIN | Index to define a minimum value |
| NAD | Node ADdress |
| NAK | Negative AcKnowledgement |
| OSI | Open Systems Interconnection |
| PCB | Protocol Control Byte |
| PCD | Proximity Coupling Device |
| PICC | Proximity Card |
| PPS | Protocol and Parameter Selection |
| PPSS | Protocol and Parameter Selection Start |
| PPS0 | Protocol and Parameter Selection parameter 0 |
| PPS1 | Protocol and Parameter Selection parameter 1 |
| R-block | Receive ready block |
| R(ACK) | R-block containing a positive acknowledge |
| R(NAK) | R-block containing a negative acknowledge |
| RATS | Request for Answer To Select |
| REQA | REQuest Command, Type A |
| RFU | Reserved for Future Use |
| S-block | Supervisory block |
| SAK | Select AcKnowledge |
| SFGI | Start-up Frame Guard time Integer |
| SFGT | Start-up Frame Guard Time |
| WUPA | Wake-Up Command, Type A |
| WTX | Waiting Time eXtension |
| WTXM | Waiting Time eXtension Multiplier |

© ISO/IEC 2001 – All rights reserved


IPR2025-01232
Apple EX1016 Page 96

## 5 Protocol activation of PICC Type A

The following activation sequence shall be applied:

— PICC activation sequence as defined in ISO/IEC 14443-3 (request, anticollision loop and select).

— At the beginning the SAK byte shall be checked for availability of an ATS. The SAK is defined in ISO/IEC 14443-3.

— The PICC may be set to HALT state, using the HLTA Command as defined in ISO/IEC 14443-3, if no ATS is available.

— The RATS may be sent by the PCD as next command after receiving the SAK if an ATS is available.

— The PICC shall send its ATS as answer to the RATS. The PICC shall only answer to the RATS if the RATS is received directly after the selection.

— If the PICC supports any changeable parameters in the ATS, a PPS request may be used by the PCD as the next command after receiving the ATS to change parameters.

— The PICC shall send a PPS Response as answer to the PPS request.

A PICC does not need to implement the PPS, if it does not support any changeable parameters in the ATS.

The PCD activation sequence for a PICC Type A is shown in Figure 1.


© ISO/IEC 2001 – All rights reserved

IPR2025-01232
Apple EX1016 Page 97

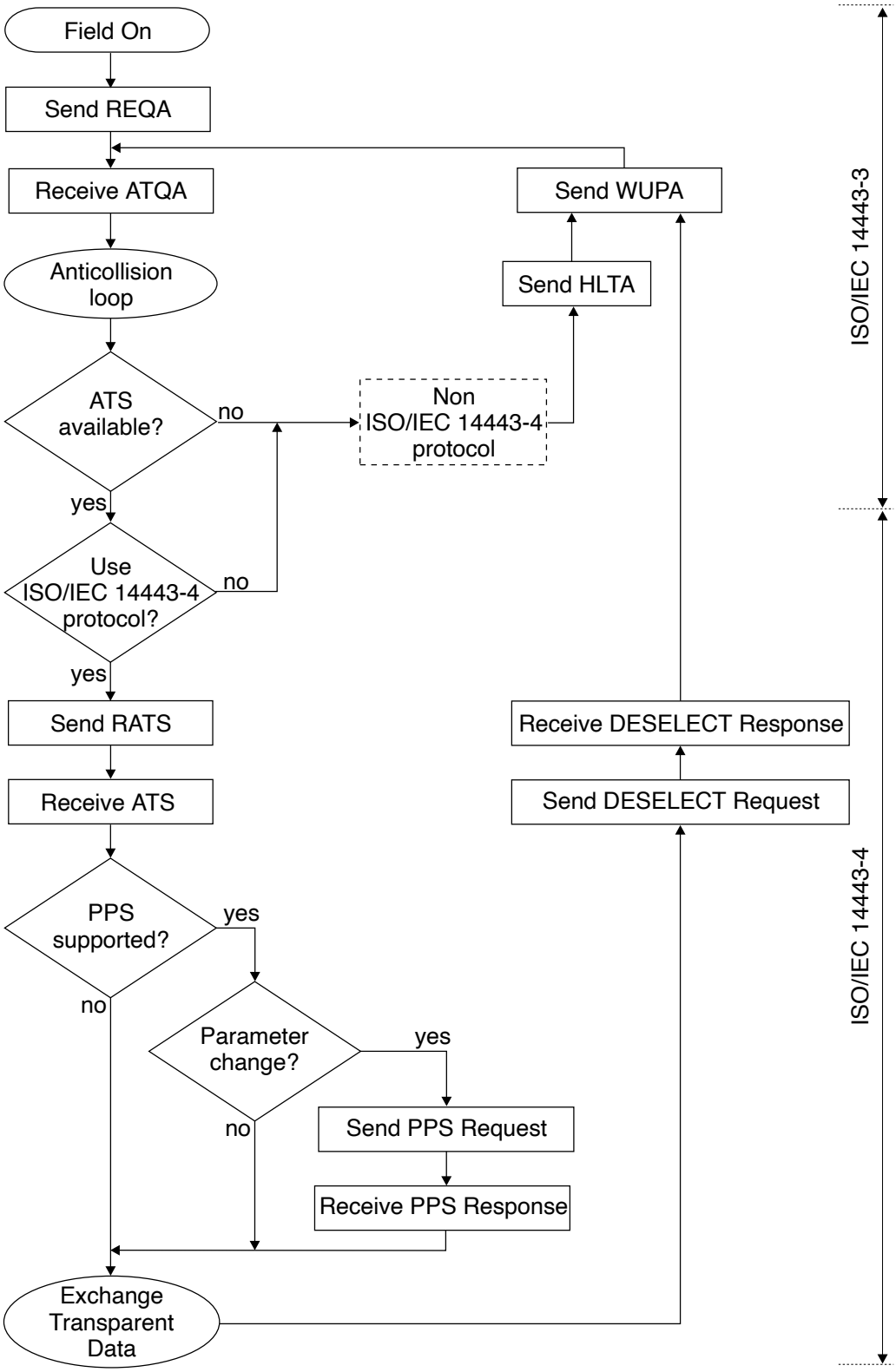


**Figure 1 — Activation of a PICC Type A by a PCD**

© ISO/IEC 2001 – All rights reserved


IPR2025-01232
Apple EX1016 Page 98

## 5.1 Request for answer to select

This clause defines the RATS with all its fields (see Figure 2).

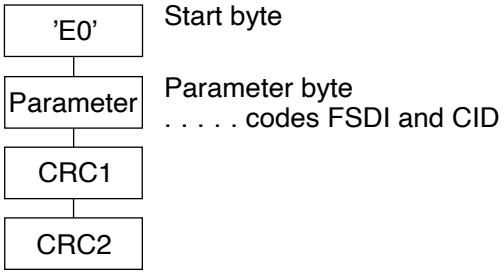


**Figure 2 — Request for answer to select**

The parameter byte consists of two parts (see Figure 3):

— The most significant half-byte b8 to b5 is called FSDI and codes FSD. The FSD defines the maximum size of a frame the PCD is able to receive. The coding of FSD is given in Table 1.

— The least significant half byte b4 to b1 is named CID and it defines the logical number of the addressed PICC in the range from 0 to 14. The value 15 is RFU. The CID is specified by the PCD and shall be unique for all PICCs, which are in the ACTIVE state at the same time. The CID is fixed for the time the PICC is active and the PICC shall use the CID as its logical identifier, which is contained in the first error-free RATS received.

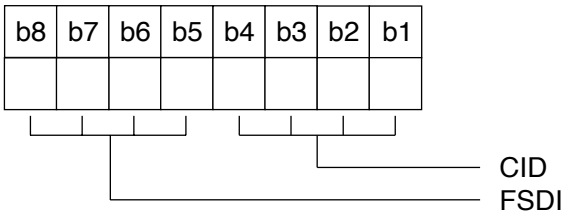


**Figure 3 — Coding of RATS parameter byte**

**Table 1 — FSDI to FSD conversion**

| FSDI | '0' | '1' | '2' | '3' | '4' | '5' | '6' | '7' | '8' | '9'-'F' |
|---|---|---|---|---|---|---|---|---|---|---|
| FSD (bytes) | 16 | 24 | 32 | 40 | 48 | 64 | 96 | 128 | 256 | RFU >256 |

## 5.2 Answer to select

This clause defines the ATS with all its available fields (see Figure 4).

In the case that one of the defined fields is not present in an ATS sent by a PICC the default values for that field shall apply.


© ISO/IEC 2001 – All rights reserved

IPR2025-01232
Apple EX1016 Page 99

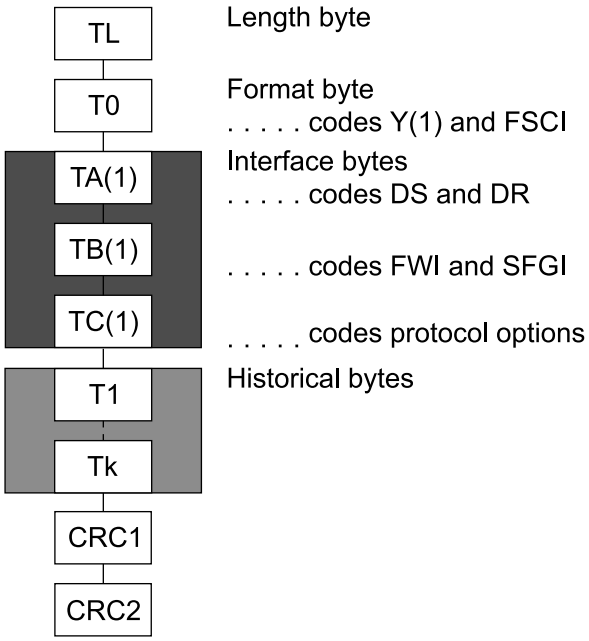


**Figure 4 — Structure of the ATS**

#### 5.2.1 Structure of the bytes

The length byte TL is followed by a variable number of optional subsequent bytes in the following order:

— format byte T0,

— interface bytes TA(1), TB(1), TC(1) and

— historical bytes T1 to Tk.

#### 5.2.2 Length byte

The length byte TL is mandatory and specifies the length of the transmitted ATS including itself. The two CRC bytes are not included in TL. The maximum size of the ATS shall not exceed the indicated FSD. Therefore the maximum value of TL shall not exceed FSD-2.

#### 5.2.3 Format byte

The format byte T0 is optional and is present as soon as the length is greater than 1. The ATS can only contain the following optional bytes when this format byte is present.

T0 consists of three parts (see Figure 5):

— The most significant bit b8 shall be set to 0. The value 1 is RFU.

— The bits b7 to b5 contain Y(1) indicating the presence of subsequent interface bytes TC(1), TB(1) and TA(1).

— The least significant half byte b4 to b1 is called FSCI and codes FSC. The FSC defines the maximum size of a frame accepted by the PICC. The default value of FSCI is 2 and leads to a FSC of 32 bytes. The coding of FSC is equal to the coding of FSD (see Table 1).

© ISO/IEC 2001 – All rights reserved


IPR2025-01232
Apple EX1016 Page 100

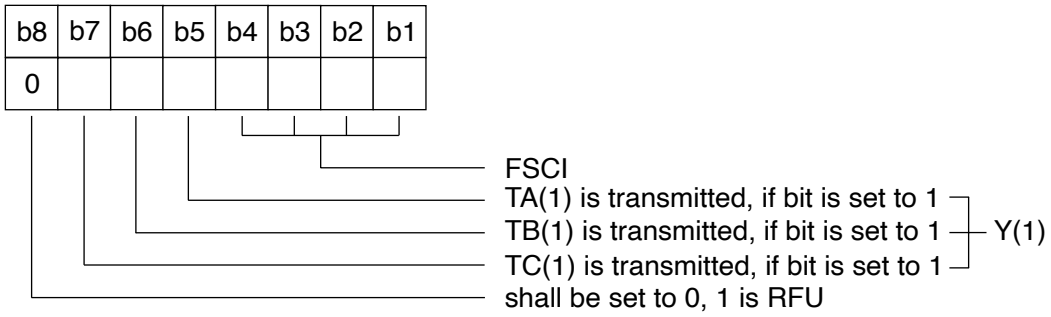


**Figure 5 — Coding of format byte**

### 5.2.4 Interface byte TA(1)

The interface byte TA(1) consists of four parts (see Figure 6):

— The most significant bit b8 codes the possibility to handle different divisors for each direction. When this bit is set to 1 the PICC is unable to handle different divisors for each direction.

— The bits b7 to b5 code the bit rate capability of the PICC for the direction from PICC to PCD, called DS. The default value shall be (000)b.

— The bit b4 shall be set to (0)b and the other value is RFU.

— The bits b3 to b1 code the bit rate capability of the PICC for the direction from PCD to PICC, called DR. The default value shall be (000)b.

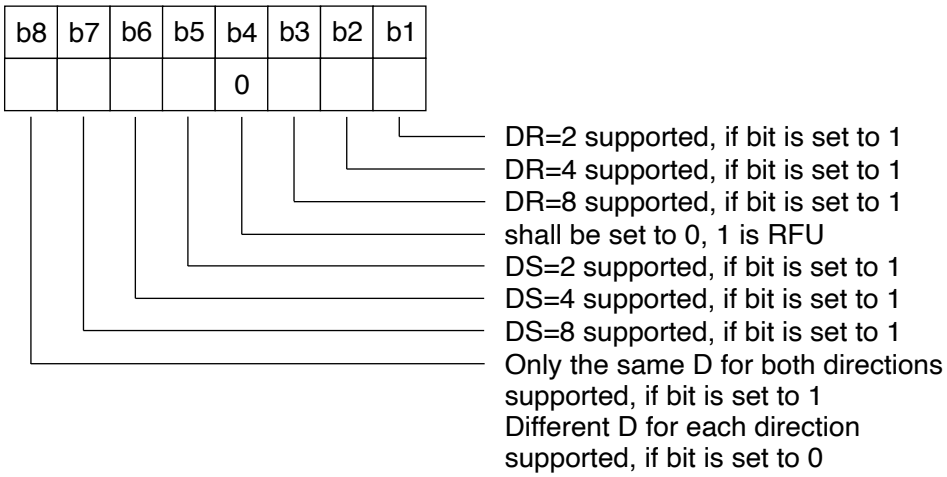


**Figure 6 — Coding of interface byte TA(1)**

The selection of a specific divisor D for each direction may be done by the PCD using a PPS.

### 5.2.5 Interface byte TB(1)

The interface byte TB(1) conveys information to define the frame waiting time and the start-up frame guard time.

The interface byte TB(1) consists of two parts (see Figure 7):

— The most significant half-byte b8 to b5 is called FWI and codes FWT (see 7.2).


© ISO/IEC 2001 – All rights reserved

IPR2025-01232
Apple EX1016 Page 101

— The least significant half byte b4 to b1 is called SFGI and codes a multiplier value used to define the SFGT. The SFGT defines a specific guard time needed by the PICC before it is ready to receive the next frame after it has sent the ATS. SFGI is coded in the range from 0 to 14. The value of 15 is RFU. The value of 0 indicates no SFGT needed and the values in the range from 1 to 14 are used to calculate the SFGT with the formula given below. The default value of SFGI is 0.

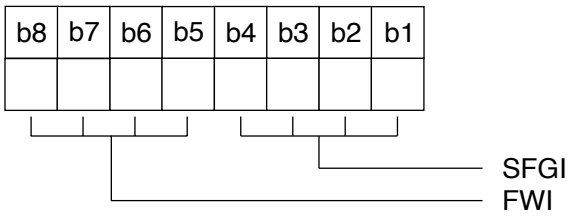


**Figure 7 — Coding of interface byte TB(1)**

SFGT is calculated by the following formula:

$SFGT = (256 \times 16 / fc) \times 2^{SFGI}$

$SFGT_{MIN}$ = minimum value of the frame delay time as defined in ISO/IEC 14443-3

$SFGT_{DEFAULT}$ = minimum value of the frame delay time as defined in ISO/IEC 14443-3

$SFGT_{MAX}$ = ~4949 ms

### 5.2.6 Interface byte TC(1)

The interface byte TC(1) specifies a parameter of the protocol.

The specific interface byte TC(1) consists of two parts (see Figure 8):

— The most significant bits b8 to b3 shall be (000000)b and all other values are RFU.

— The bits b2 and b1 define which optional fields in the prologue field a PICC does support. The PCD is allowed to skip fields, which are supported by the PICC, but a field not supported by the PICC shall never be transmitted by the PCD. The default value shall be (10)b indicating CID supported and NAD not supported.

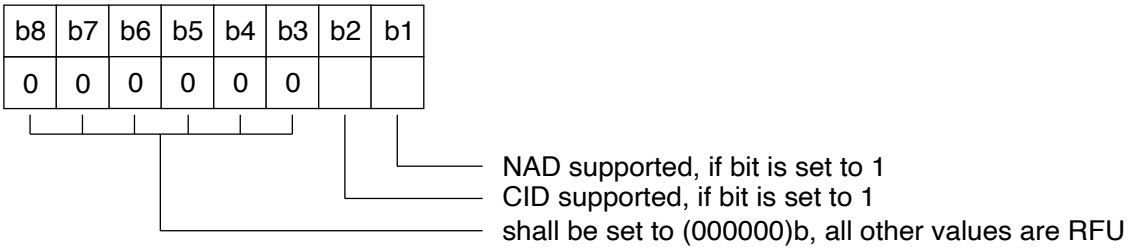


**Figure 8 — Coding of interface byte TC(1)**

### 5.2.7 Historical bytes

The historical bytes T1 to Tk are optional and designate general information. The maximum length of the ATS gives the maximum possible number of historical bytes. ISO/IEC 7816-4 specifies the content of the historical bytes.

© ISO/IEC 2001 – All rights reserved


IPR2025-01232
Apple EX1016 Page 102

## 5.3 Protocol and parameter selection request

PPS request contains the start byte that is followed by two parameter bytes (see Figure 9).

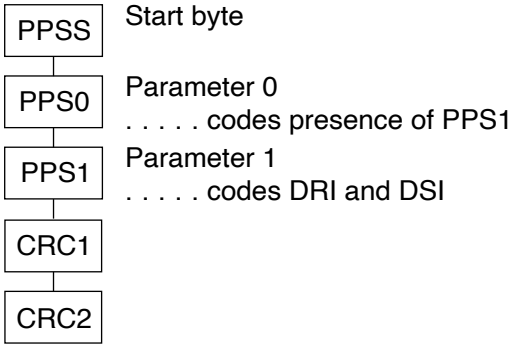


**Figure 9 — Protocol and parameter selection request**

### 5.3.1 Start byte

PPSS consists of two parts (see Figure 10):

— The most significant half byte b8 to b5 shall be set to ‘D’ and identifies the PPS.

— The least significant half byte b4 to b1 is named CID and it defines the logical number of the addressed PICC.

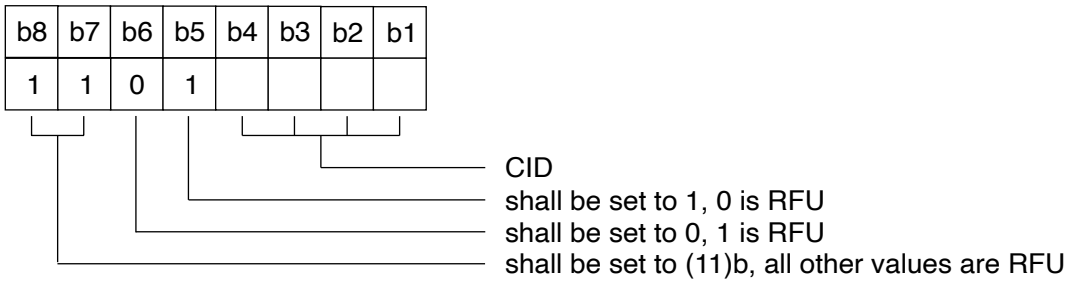


**Figure 10 — Coding of PPSS**


© ISO/IEC 2001 – All rights reserved

IPR2025-01232
Apple EX1016 Page 103

### 5.3.2 Parameter 0

PPS0 indicates the presence of the optional byte PPS1 (see Figure 11).

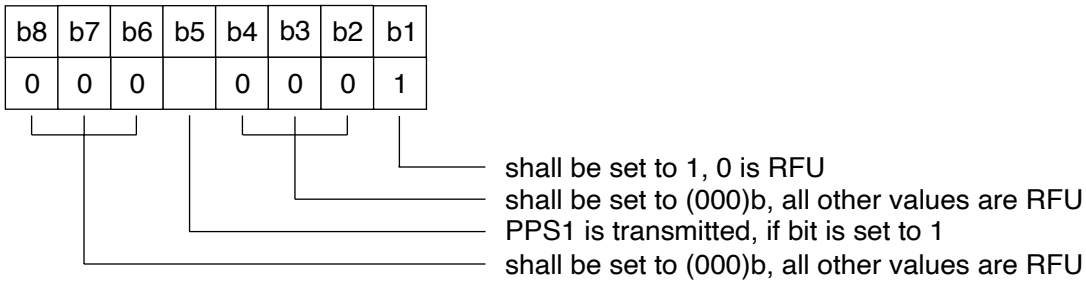


**Figure 11 — Coding of PPS0**

### 5.3.3 Parameter 1

PPS1 consists of three parts (see Figure 12):

— The most significant half byte b8 to b5 shall be (0000)b and all other values are RFU.

— The bits b4 and b3 are called DSI and code the selected divisor integer from PICC to PCD.

— The bits b2 and b1 are called DRI and code the selected divisor integer from PCD to PICC.

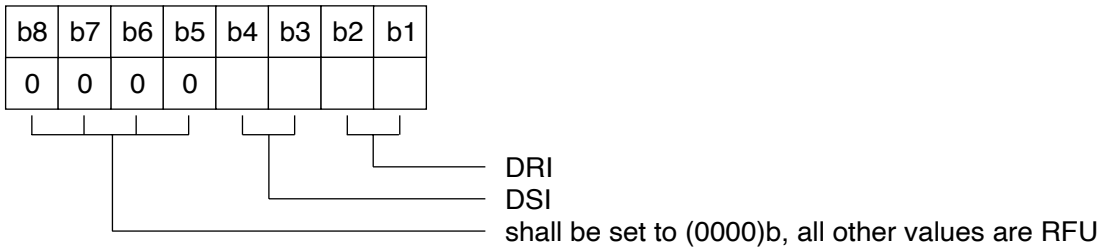


**Figure 12 — Coding of PPS1**

For the definition of DS and DR, see 5.2.4.

The coding of D is given in Table 2.

**Table 2 — DRI, DSI to D conversion**

| DRI, DSI | (00)b | (01)b | (10)b | (11)b |
|---|---|---|---|---|
| D | 1 | 2 | 4 | 8 |

© ISO/IEC 2001 – All rights reserved


IPR2025-01232
Apple EX1016 Page 104

## 5.4 Protocol and parameter selection response

The PPS response acknowledges the received PPS request (see Figure 13) and it contains only the start byte (see 5.3.1).

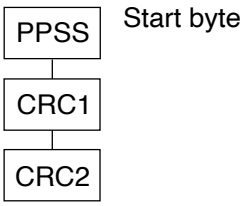


**Figure 13 — Protocol and parameter selection response**

## 5.5 Activation frame waiting time

The activation frame waiting time defines the maximum time for a PICC to start sending its response frame after the end of a frame received from the PCD and has a value of 65536/*fc* (~4833 µs).

NOTE The minimum time between frames in any direction is defined in ISO/IEC 14443-3.

## 5.6 Error detection and recovery

### 5.6.1 Handling of RATS and ATS

#### 5.6.1.1 PCD rules

When the PCD has sent the RATS and receives a valid ATS the PCD shall continue operation.

In any other case the PCD may retransmit the RATS before it shall use the deactivation sequence as defined in clause 8. In case of failure of this deactivation sequence it may use the HLTA Command as defined in ISO/IEC 14443-3.

#### 5.6.1.2 PICC rules

When the PICC has been selected with the last command and

a) receives a valid RATS, the PICC

— shall send back its ATS and

— shall disable the RATS (stop responding to received RATS).

b) receives any other block valid or invalid, except a HLTA Command, the PICC

— shall ignore the block and

— shall remain in receive mode.


© ISO/IEC 2001 – All rights reserved

IPR2025-01232
Apple EX1016 Page 105

### 5.6.2 Handling of PPS request and PPS response

#### 5.6.2.1 PCD rules

When the PCD has sent a PPS request and received a valid PPS response the PCD shall activate the selected parameters and continue operation.

In any other case the PCD may retransmit a PPS request and continue operation.

#### 5.6.2.2 PICC rules

When the PICC has received a RATS, sent its ATS and

a) received a valid PPS request, the PICC

— shall send the PPS response,

— shall disable the PPS request (stop responding to received PPS requests) and

— shall activate the received parameter.

b) received an invalid block, the PICC

— shall disable the PPS request (stop responding to received PPS requests) and

— shall remain in receive mode.

c) received a valid block, except a PPS request, the PICC

— shall disable the PPS request (stop responding to received PPS requests) and

— shall continue operation.

### 5.6.3 Handling of the CID during activation

When the PCD has sent a RATS containing a CID=*n* not equal to 0 and

a) received an ATS indicating CID is supported, the PCD

— shall send blocks containing CID=*n* to this PICC and

— shall not use the CID=*n* for further RATS while this PICC is in ACTIVE state.

b) received an ATS indicating CID is not supported, the PCD

— shall send blocks containing no CID to this PICC and

— shall not activate any other PICC while this PICC is in ACTIVE state.

When the PCD has sent a RATS containing a CID equal to 0 and

a) received an ATS indicating CID is supported, the PCD

— may send blocks containing CID equal to 0 to this PICC and

— shall not activate any other PICC while this PICC is in ACTIVE state.

© ISO/IEC 2001 – All rights reserved


IPR2025-01232
Apple EX1016 Page 106

b) received an ATS indicating CID is not supported, the PCD shall

— send blocks containing no CID to this PICC and

— not activate any other PICC while this PICC is in ACTIVE state.

## 6 Protocol activation of PICC Type B

The activation sequence for a PICC Type B is described in ISO/IEC 14443-3.

## 7 Half-duplex block transmission protocol

The half-duplex block transmission protocol addresses the special needs of contactless card environments and uses the frame format as defined in ISO/IEC 14443-3.

Other relevant elements of the frame format are:

— block format,

— maximum frame waiting time,

— power indication and

— protocol operation.

This protocol is designed according to the principle layering of the OSI reference model, with particular attention to the minimization of interactions across boundaries. Four layers are defined:

— Physical layer exchanges bytes according to ISO/IEC 14443-3.

— Data link layer exchanges blocks as defined in this clause.

— Session layer combined with the data link layer for a minimum overhead.

— Application layer processing commands, which involve the exchange of at least one block or chain of blocks in either direction.

NOTE Application selection may be used as defined in ISO/IEC 7816-5. Implicit application selection is not recommended to be used with multi-application PICCs.


© ISO/IEC 2001 – All rights reserved

IPR2025-01232
Apple EX1016 Page 107

## 7.1 Block format

The block format (see Figure 14) consists of a prologue field (mandatory), an information field (optional) and an epilogue field (mandatory).

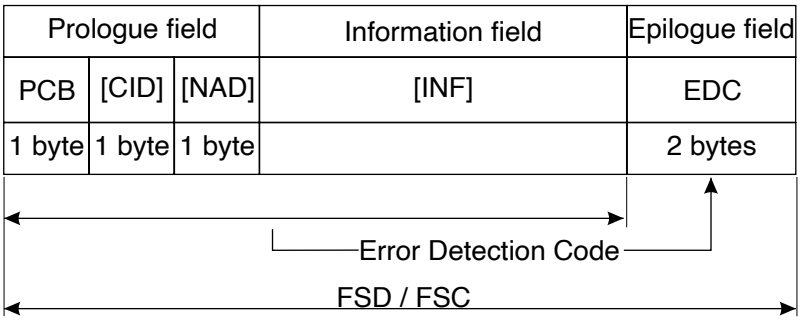


NOTE The items in brackets indicate optional requirements.

**Figure 14 — Block format**

### 7.1.1 Prologue field

The prologue field is mandatory and consists of up to three bytes:

— Protocol Control Byte (mandatory),

— Card IDentifier (optional),

— Node ADdress (optional).

#### 7.1.1.1 Protocol control byte field

The PCB is used to convey the information required to control the data transmission.

The protocol defines three fundamental types of blocks:

— I-block used to convey information for use by the application layer.

— R-block used to convey positive or negative acknowledgements. An R-block never contains an INF field. The acknowledgement relates to the last received block.

— S-block used to exchange control information between the PCD and the PICC. Two different types of S-blocks are defined:

1) Waiting time extension containing a 1 byte long INF field and

2) DESELECT containing no INF field.

The coding of the PCB depends on its type and is defined by the following figures. PCB coding not defined here are either used in other clauses of ISO/IEC 14443 or are RFU. The coding of I-blocks, R-blocks and S-blocks are shown in Figure 15, Figure 16 and Figure 17.

© ISO/IEC 2001 – All rights reserved


IPR2025-01232
Apple EX1016 Page 108

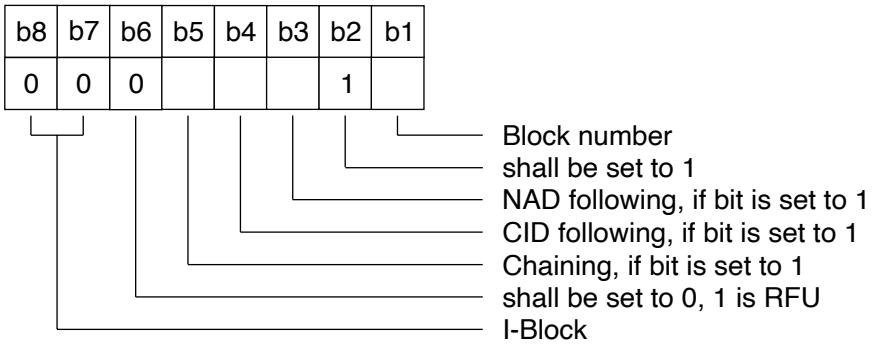


**Figure 15 — Coding of I-block PCB**

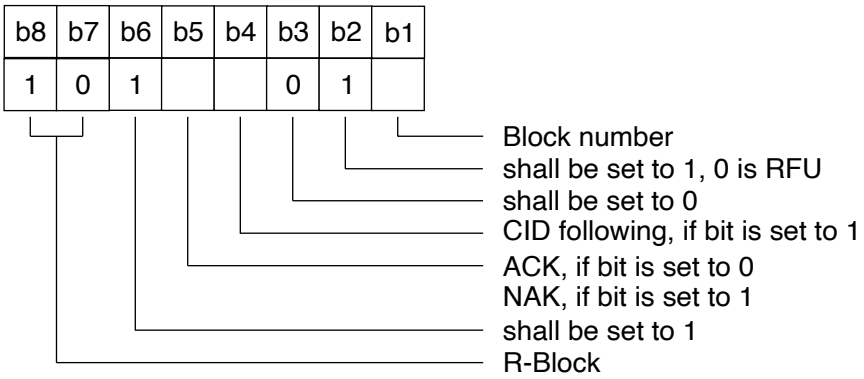


**Figure 16 — Coding of R-block PCB**

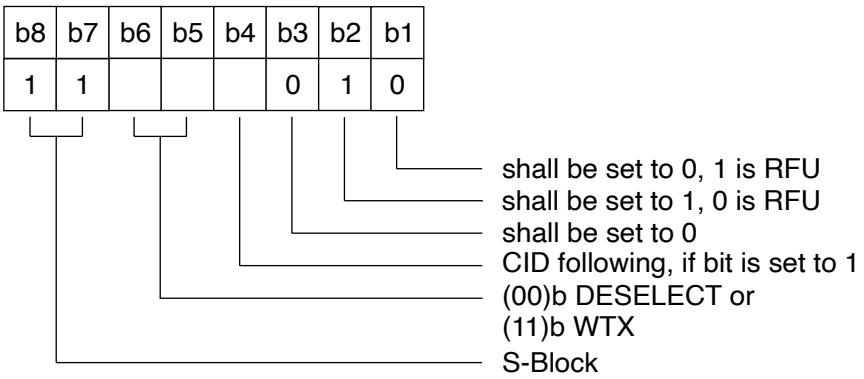


**Figure 17 — Coding of S-block PCB**

#### 7.1.1.2 Card identifier field

The CID field is used to identify a specific PICC and consists of three parts (see Figure 18):

— The two most significant bits b8 and b7 are used to indicate the power level indication received by a PICC from a PCD. These two bits shall be set to (00)b for PCD to PICC communication. For a definition of power level indication, see 7.4.


© ISO/IEC 2001 – All rights reserved

IPR2025-01232
Apple EX1016 Page 109

— The bits b6 and b5 are used to convey additional information, which are not defined and shall be set to (00)b and all other values are RFU.

— The bits b4 to b1 code the CID.

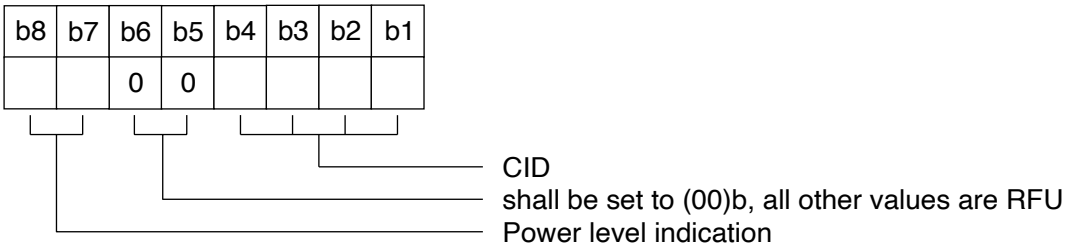


**Figure 18 — Coding of card identifier**

The coding of CID is given in 5.1 for Type A and ISO/IEC 14443-3 for Type B.

The handling of the CID by a PICC is described below:

A PICC, which does not support a CID

— shall ignore any block containing a CID.

A PICC, which does support a CID

— shall respond to blocks containing its CID by using its CID,

— shall ignore blocks containing other CIDs and

— shall, in case its CID is 0, respond also to blocks containing no CID by using no CID.

#### 7.1.1.3 Node address field

The NAD in the prologue field is reserved to build up and address different logical connections. The usage of the NAD shall be compliant with the definition from ISO/IEC 7816-3, when the bits b8 and b4 are both set to 0. All other values are RFU.

The following definitions shall apply for the usage of the NAD:

a) The NAD field shall only be used for I-blocks.

b) When the PCD uses the NAD, the PICC shall also use the NAD.

c) During chaining the NAD shall only be transmitted in the first block of chain.

d) The PCD shall never use the NAD to address different PICCs (The CID shall be used to address different PICCs).

e) When the PICC does not support the NAD, it shall ignore any block containing the NAD.

### 7.1.2 Information field

The INF field is optional. When present, the INF field conveys either application data in I-blocks or non-application data and status information in S-blocks. The length of the information field is calculated by counting the number of bytes of the whole block minus length of prologue and epilogue field.

© ISO/IEC 2001 – All rights reserved


IPR2025-01232
Apple EX1016 Page 110

### 7.1.3 Epilogue field

The epilogue field contains the EDC of the transmitted block, which is the CRC defined in ISO/IEC 14443-3.

## 7.2 Frame waiting time

The FWT defines the time within which a PICC shall start its response frame after the end of a PCD frame (see Figure 19).

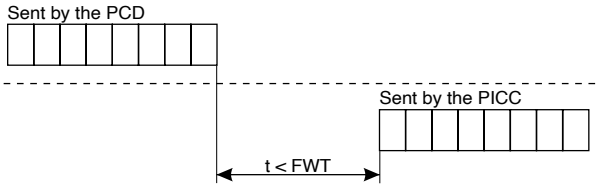


**Figure 19 — Frame waiting time**

NOTE The minimum time between frames in any direction is defined in ISO/IEC 14443-3.

FWT is calculated by the following formula:

$$FWT = (256 \times 16 / fc) \times 2^{FWI}$$

where the value of FWI has the range from 0 to 14 and the value of 15 is RFU. For Type A, if TB(1) is omitted, the default value of FWI is 4, which gives a FWT value of ~ 4,8 ms.

For FWI = 0, FWT = $FWT_{MIN}$ (~302 µs)

For FWI = 14, FWT = $FWT_{MAX}$ (~4949 ms)

The FWT value shall be used by the PCD to detect a protocol error or an unresponsive PICC. The PCD obtains the right to re-transmit if the start of a response from the PICC is not received within FWT.

The FWI field for Type B is located in ATQB as defined in ISO/IEC 14443-3. The FWI field for Type A is located in the ATS (see 5.2.5).

## 7.3 Frame waiting time extension

When the PICC needs more time than the defined FWT to process the received block it shall use an S(WTX) request for a waiting time extension. An S(WTX) request contains a 1 byte long INF field that consists of two parts (see Figure 20):

— The two most significant bits b8 and b7 code the power level indication (see 7.4).

— The least significant bits b6 to b1 code the WTXM. The WTXM is coded in the range from 1 to 59. The values 0 and 60 to 63 are RFU.


© ISO/IEC 2001 – All rights reserved

IPR2025-01232
Apple EX1016 Page 111

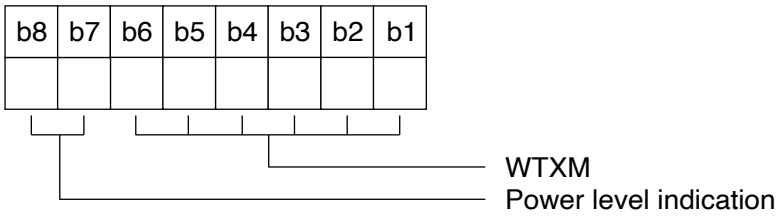


**Figure 20 — Coding of INF field of an S(WTX) request**

The PCD shall acknowledge by sending an S(WTX) response containing also a 1 byte long INF field that consists of two parts (see Figure 21) and contains the same WTXM as received in the request:

— The most significant bits b8 and b7 shall be (00)b and all other values are RFU.

— The least significant bits b6 to b1 codes the acknowledged WTXM value used to define a temporary FWT.

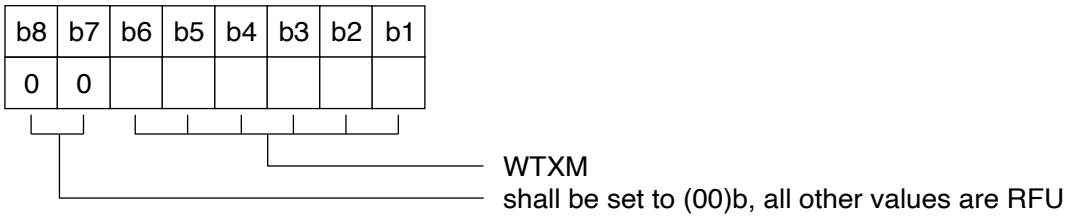


**Figure 21 — Coding of INF field of an S(WTX) response**

The corresponding temporary value of FWT is calculated by the following formula:

$FWT_{TEMP}$ = FWT x WTXM.

The time $FWT_{TEMP}$ requested by the PICC, starts after the PCD has sent the S(WTX) response.

$FWT_{MAX}$ shall be used, when the formula results in a value higher than $FWT_{MAX}$.

The temporary FWT applies only until the next block has been received by the PCD.

## 7.4 Power level indication

The power level indication is coded as shown in Table 3 using two bits embedded in the CID field (when present) and in the S-block sent by the PICC (see 7.1.1.2 and 7.3).

**Table 3 — Coding of power level indication**

| | |
|---|---|
| (00)b | PICC does not support the power level indication |
| (01)b | Insufficient power for full functionality |
| (10)b | Sufficient power for full functionality |
| (11)b | More than sufficient power for full functionality |

NOTE Interpretation of the power level indication by the PCD is optional.

© ISO/IEC 2001 – All rights reserved


IPR2025-01232
Apple EX1016 Page 112

## 7.5 Protocol operation

After the activation sequence the PICC shall wait for a block as only the PCD has the right to send. After sending a block, the PCD shall switch to receive mode and wait for a block before switching back to transmit mode. The PICC may transmit blocks only in response to received blocks (it is insensitive to time delays). After responding, the PICC shall return to the receive mode.

The PCD shall not initiate a new pair of command / response until the current pair of command / response has been completed or if the frame waiting time is exceeded with no response.

### 7.5.1 Multi-Activation

The Multi-Activation feature allows the PCD to hold several PICCs in the ACTIVE state simultaneously. It allows switching directly between several PICCs without needing additional time for deactivation of a PICC and activation of another PICC.

For an example of Multi-Activation, see Annex A.

NOTE The PCD needs to handle a separate block number for each activated PICC.

### 7.5.2 Chaining

The chaining feature allows the PCD or PICC to transmit information that does not fit in a single block as defined by FSC or FSD respectively, by dividing the information into several blocks. Each of those blocks shall have a length less than or equal to FSC or FSD respectively.

The chaining bit in the PCB of an I-block controls the chaining of blocks. Each I-block with the chaining bit set shall be acknowledged by an R-block.

The chaining feature is shown in Figure 22 using a 16 bytes long string transmitted in three blocks.

Notation:

$I(1)_X$ I-block with chaining bit set and block number x

$I(0)_X$ I-block with chaining bit not set (last block of chain) and block number x

$R(ACK)_X$ R-block that indicates a positive acknowledge.


© ISO/IEC 2001 – All rights reserved

IPR2025-01232
Apple EX1016 Page 113

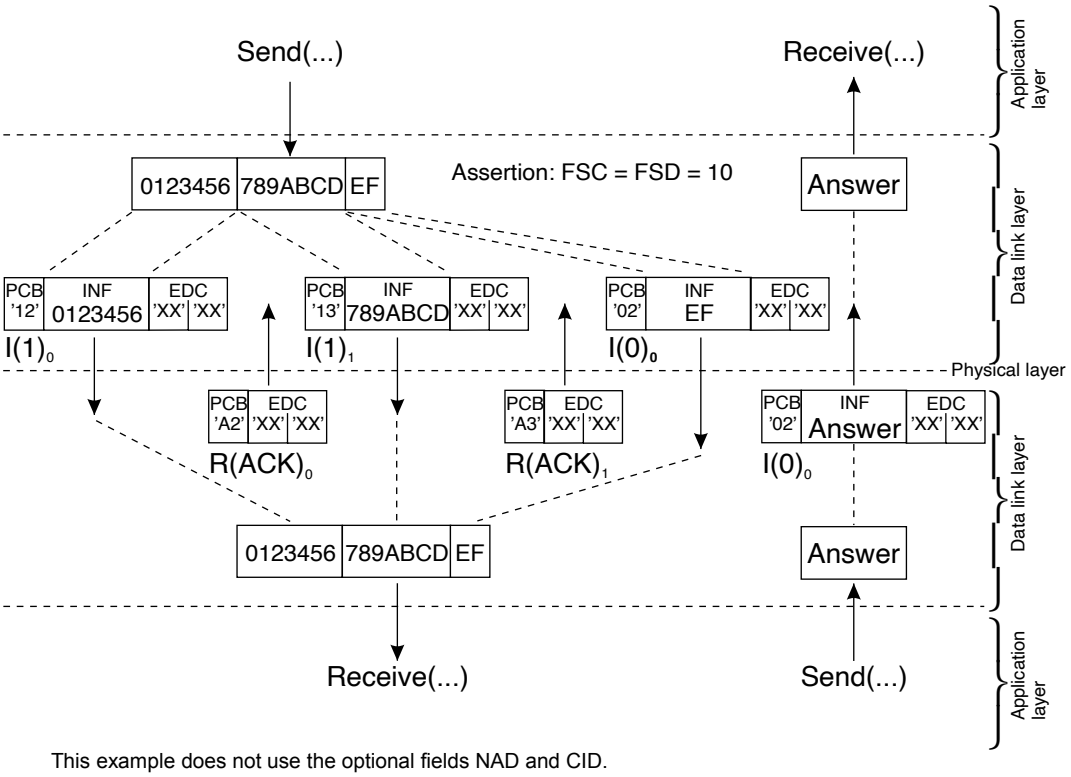


NOTE This example does not use the optional fields NAD and CID.

**Figure 22 — Chaining**

### 7.5.3 Block numbering rules

#### 7.5.3.1 PCD rules

Rule A. The PCD block number shall be initialized to 0 for each activated PICC.

Rule B. When an I-block or an R(ACK) block with a block number equal to the current block number is received, the PCD shall toggle the current block number for that PICC before optionally sending a block.

#### 7.5.3.2 PICC rules

Rule C. The PICC block number shall be initialized to 1 at activation.

Rule D. When an I-block is received (independent of its block number), the PICC shall toggle its block number before sending a block.

Rule E. When an R(ACK) block with a block number not equal to the current PICC's block number is received, the PICC shall toggle its block number before sending a block.

### 7.5.4 Block handling rules

#### 7.5.4.1 General rules

Rule 1. The first block shall be sent by the PCD.

Rule 2. When an I-block indicating chaining is received, the block shall be acknowledged by an R(ACK) block.

© ISO/IEC 2001 – All rights reserved


IPR2025-01232
Apple EX1016 Page 114

Rule 3. S-blocks are only used in pairs. An S(...) request block shall always be followed by an S(...) response block (see 7.3 and 8).

#### 7.5.4.2 PCD rules

Rule 4. When an invalid block is received or a FWT time-out occurs, an R(NAK) block shall be sent (except in the case of PICC chaining or S(DESELECT)).

Rule 5. In the case of PICC chaining, when an invalid block is received or a FWT time-out occurs, an R(ACK) block shall be sent.

Rule 6. When an R(ACK) block is received, if its block number is not equal to the PCD's current block number, the last I-block shall be re-transmitted.

Rule 7. When an R(ACK) block is received, if its block number is equal to the PCD's current block number, chaining shall be continued.

Rule 8. If the S(DESELECT) request is not answered by an error-free S(DESELECT) response the S(DESELECT) request may be re-transmitted or the PICC may be ignored.

#### 7.5.4.3 PICC rules

Rule 9. The PICC is allowed to send an S(WTX) block instead of an I-block or an R(ACK) block.

Rule 10. When an I-block not indicating chaining is received, the block shall be acknowledged by an I-block.

Rule 11. When an R(ACK) or an R(NAK) block is received, if its block number is equal to the PICC's current block number, the last block shall be re-transmitted.

Rule 12. When an R(NAK) block is received, if its block number is not equal to the PICC's current block number, an R(ACK) block shall be sent.

Rule 13. When an R(ACK) block is received, if its block number is not equal to the PICC's current block number, and the PICC is in chaining, chaining shall be continued.

### 7.5.5 Error detection and recovery

When errors are detected the following recovery rules shall be attempted. The definitions made in this clause overrule the block handling rules (see 7.5.3).

The following errors shall be detected by the PCD:

a) Transmission error (Frame error or EDC error) or FWT time-out

The PCD shall attempt error recovery by the following techniques in the order shown:

— Application of PCD rules (see 7.5.4.2),

— Use of S(DESELECT) request,

— Ignore the PICC.

b) Protocol error (infringement of PCB coding or infringement of protocol rules)

The PCD shall attempt error recovery by the following techniques in the order shown:

— Use of S(DESELECT) request,


© ISO/IEC 2001 – All rights reserved

— Ignore the PICC.

The following errors shall be detected by the PICC:

a) Transmission error (Frame error or EDC error),

b) Protocol error (infringement of the protocol rules).

The PICC shall attempt no error recovery. The PICC shall always return to receive mode, when a transmission error or a protocol error occurs and it shall accept an S(DESELECT) request at any time.

NOTE An R(NAK) block is never sent by the PICC.

## 8 Protocol deactivation of PICC Type A and Type B

The PICC shall be set to the HALT state, after the transactions between PCD and PICC have been completed.

The deactivation of a PICC is done by using a DESELECT Command.

The DESELECT Command is coded as an S-block of the protocol and consists of an S(DESELECT) request block sent by the PCD and an S(DESELECT) response sent as acknowledge by the PICC.

### 8.1 Deactivation frame waiting time

The deactivation frame waiting time defines the maximum time for a PICC to start sending its S(DESELECT) response frame after the end of the S(DESELECT) request frame received from the PCD and has a value of 65536/*fc* (~4,8 ms).

NOTE The minimum time between frames in any direction is defined in ISO/IEC 14443-3.

### 8.2 Error detection and recovery

When the PCD has sent an S(DESELECT) request and has received an S(DESELECT) response, the PICC has been set successfully to the HALT state and the CID assigned to it is released.

When the PCD fails to receive an S(DESELECT) response the PCD may retry the deactivation sequence.

© ISO/IEC 2001 – All rights reserved


IPR2025-01232
Apple EX1016 Page 116

# Annex A
(informative)

## Multi-Activation example

The following table describes an example of the usage of Multi-Activation for three PICCs.

**Table A.1 — Multi-Activation**

| PCD Action | Status PICC 1 | Status PICC 2 | Status PICC 3 |
|---|---|---|---|
| Power On field | | | |
| Three PICC enter the field. | IDLE | IDLE | IDLE |
| Activate PICC with CID=1 | ACTIVE(1) | IDLE | IDLE |
| Any data transmission with CID=1 | ACTIVE(1) | IDLE | IDLE |
| ... | | | |
| Activate PICC with CID=2 | ACTIVE(1) | ACTIVE(2) | IDLE |
| Any data transmission with CID=1,2 | ACTIVE(1) | ACTIVE(2) | IDLE |
| ... | | | |
| Activate PICC with CID=3 | ACTIVE(1) | ACTIVE(2) | ACTIVE(3) |
| Any data transmission with CID=1,2,3 | ACTIVE(1) | ACTIVE(2) | ACTIVE(3) |
| ... | | | |
| S(DESELECT) Command with CID=3 | ACTIVE(1) | ACTIVE(2) | HALT |
| S(DESELECT) Command with CID=2 | ACTIVE(1) | HALT | HALT |
| S(DESELECT) Command with CID=1 | HALT | HALT | HALT |
| ... | | | |


© ISO/IEC 2001 – All rights reserved

IPR2025-01232
Apple EX1016 Page 117

# Annex B
(informative)

# Protocol scenarios

This annex gives some scenarios for an error-free operation as well as for error handling. These scenarios may be used to build test cases for compliance tests.

## B.1 Notation

| | | |
|---|---|---|
| Any block | ===> | correctly received |
| Any block | =≠=> | erroneously received |
| Any block | = => | nothing received (FWT time-out) |
| Separator line | ____ | end of the smallest protocol operation |
| $I(1)_x$ | I-block with chaining bit set and block number x | |
| $I(0)_X$ | I-block with chaining bit not set (last block of chain) and block number x | |
| $R(ACK)_x$ | R-block indicating a positive acknowledge | |
| $R(NAK)_x$ | R-block indicating a negative acknowledge | |
| S(... ) | S-block | |

The block numbering in a scenario always starts with the PCD's current block number for the destination PICC. For ease of presentation, scenarios start after the PICC activation sequence and hence the current block numbers start with 0 for the PCD and with 1 for the PICC.

## B.2 Error-free operation

### B.2.1 Exchange of I-blocks

Scenario 1 Exchange of I-blocks

| Comment | | Block No. (0) | PCD | | PICC | Block No. (1) | Comment |
|---|---|---|---|---|---|---|---|
| 1. | rule 1 | | $I(0)_0$ | ===> | | 0 | rule D |
| 2. | rule B | 1 | | <=== | $I(0)_0$ | | rule 10 |
| 3. | | | $I(0)_1$ | ===> | | 1 | rule D |
| 4. | rule B | 0 | | <=== | $I(0)_1$ | | rule 10 |

© ISO/IEC 2001 – All rights reserved


IPR2025-01232
Apple EX1016 Page 118

### B.2.2 Request for waiting time extension

Scenario 2 Waiting time extension

| | Comment | Block No. (0) | PCD | | PICC | Block No. (1) | Comment |
|---|---|---|---|---|---|---|---|
| 1. | rule 1 | | $I(0)_0$ | ===> | | 0 | rule D |
| 2. | | | | <=== | S(WTX) request | | rule 9 |
| 3. | rule 3 | | S(WTX) response | ===> | | | |
| 4. | rule B | 1 | | <=== | $I(0)_0$ | | rule 10 |
| 5. | | | $I(0)_1$ | ===> | | 1 | rule D |
| 6. | rule B | 0 | | <=== | $I(0)_1$ | | rule 10 |

### B.2.3 DESELECT

Scenario 3 DESELECT

| | Comment | Block No. (0) | PCD | | PICC | Block No. (1) | Comment |
|---|---|---|---|---|---|---|---|
| 1. | rule 1 | | $I(0)_0$ | ===> | | 0 | rule D |
| 2. | rule B | 1 | | <=== | $I(0)_0$ | | rule 10 |
| 3. | | | S(DESELECT) request | ===> | | | |
| 4. | | | | <=== | S(DESELECT) response | | rule 3 |

### B.2.4 Chaining

Scenario 4 PCD uses chaining

| | Comment | Block No. (0) | PCD | | PICC | Block No. (1) | Comment |
|---|---|---|---|---|---|---|---|
| 1. | rule 1 | | $I(1)_0$ | ===> | | 0 | rule D |
| 2. | rule B | 1 | | <=== | $R(ACK)_0$ | | rule 2 |
| 3. | rule 7 | | $I(0)_1$ | ===> | | 1 | rule D |
| 4. | rule B | 0 | | <=== | $I(0)_1$ | | rule 10 |
| 5. | | | $I(0)_0$ | ===> | | 0 | rule D |
| 6. | rule B | 1 | | <=== | $I(0)_0$ | | rule 10 |


© ISO/IEC 2001 – All rights reserved

IPR2025-01232
Apple EX1016 Page 119

Scenario 5 PICC uses chaining

| | Comment | Block No. (0) | PCD | | PICC | Block No. (1) | Comment |
|---|---|---|---|---|---|---|---|
| 1. | rule 1 | | $I(0)_0$ | ===> | | 0 | rule D |
| 2. | rule B | 1 | | <=== | $I(1)_0$ | | rule 10 |
| 3. | rule 2 | | $R(ACK)_1$ | ===> | | 1 | rule E |
| 4. | rule B | 0 | | <=== | $I(0)_1$ | | rule 13 |
| 5. | | | $I(0)_0$ | ===> | | 0 | rule D |
| 6. | rule B | 1 | | <=== | $I(0)_0$ | | rule 10 |

## B.3 Error handling

### B.3.1 Exchange of I-blocks

Scenario 6 Start of protocol

| | Comment | Block No. (0) | PCD | | PICC | Block No. (1) | Comment |
|---|---|---|---|---|---|---|---|
| 1. | rule 1 | | $I(0)_0$ | =≠=> | | | |
| 2. | time-out | | | <= = | - | | |
| 3. | rule 4 | | $R(NAK)_0$ | ===> | | | |
| 4. | | no change | | <=== | $R(ACK)_1$ | | rule 12 |
| 5. | rule 6 | | $I(0)_0$ | ===> | | 0 | rule D |
| 6. | rule B | 1 | | <=== | $I(0)_0$ | | rule 10 |
| 7. | | | $I(0)_1$ | ===> | | 1 | rule D |
| 8. | rule B | 0 | | <=== | $I(0)_1$ | | rule 10 |

Scenario 7 Exchange of I-blocks

| | Comment | Block No. (0) | PCD | | PICC | Block No. (1) | Comment |
|---|---|---|---|---|---|---|---|
| 1. | rule 1 | | $I(0)_0$ | ===> | | 0 | rule D |
| 2. | rule B | 1 | | <=== | $I(0)_0$ | | rule 10 |
| 3. | | | $I(0)_1$ | =≠=> | | | |
| 4. | time-out | | | <= = | - | | |
| 5. | rule 4 | | $R(NAK)_1$ | ===> | | | |
| 6. | | no change | | <=== | $R(ACK)_0$ | | rule 12 |
| 7. | rule 6 | | $I(0)_1$ | ===> | | 1 | rule D |
| 8. | rule B | 0 | | <=== | $I(0)_1$ | | rule 10 |
| 9. | | | $I(0)_0$ | ===> | | 0 | rule D |
| 10. | rule B | 1 | | <=== | $I(0)_0$ | | rule 10 |

© ISO/IEC 2001 – All rights reserved


IPR2025-01232
Apple EX1016 Page 120

Scenario 8 Exchange of I-blocks

| | Comment | Block No. (0) | PCD | | PICC | Block No. (1) | Comment |
|---|---|---|---|---|---|---|---|
| 1. | rule 1 | | $I(0)_0$ | ===> | | 0 | rule D |
| 2. | | | | <=≠= | $I(0)_0$ | | rule 10 |
| 3. | rule 4 | | $R(NAK)_0$ | ===> | | | |
| 4. | rule B | 1 | | <=== | $I(0)_0$ | | rule 11 |
| 5. | | | $I(0)_1$ | ===> | | 1 | rule D |
| 6. | rule B | 0 | | <=== | $I(0)_1$ | | rule 10 |

Scenario 9 Exchange of I-blocks

| | Comment | Block No. (0) | PCD | | PICC | Block No. (1) | Comment |
|---|---|---|---|---|---|---|---|
| 1. | rule 1 | | $I(0)_0$ | ===> | | 0 | rule D |
| 2. | | | | <=≠= | $I(0)_0$ | | rule 10 |
| 3. | rule 4 | | $R(NAK)_0$ | =≠=> | | | |
| 4. | time-out | | | <= = | - | | |
| 5. | rule 4 | | $R(NAK)_0$ | ===> | | | |
| 6. | rule B | 1 | | <=== | $I(0)_0$ | | rule 11 |
| 7. | | | $I(0)_1$ | ===> | | 1 | rule D |
| 8. | rule B | 0 | | <=== | $I(0)_1$ | | rule 10 |

### B.3.2 Request for waiting time extension

Scenario 10 Request for waiting time extension

| | Comment | Block No. (0) | PCD | | PICC | Block No. (1) | Comment |
|---|---|---|---|---|---|---|---|
| 1. | rule 1 | | $I(0)_0$ | ===> | | 0 | rule D |
| 2. | | | | <=≠= | S(WTX) request | | rule 9 |
| 3. | rule 4 | | $R(NAK)_0$ | ===> | | | |
| 4. | | | | <=== | S(WTX) request | | rule 11 |
| 5. | rule 3 | | S(WTX) response | ===> | | | |
| 6. | rule B | 1 | | <=== | $I(0)_0$ | | rule 10 |
| 7. | | | $I(0)_1$ | ===> | | 1 | rule D |
| 8. | rule B | 0 | | <=== | $I(0)_1$ | | rule 10 |


© ISO/IEC 2001 – All rights reserved

IPR2025-01232
Apple EX1016 Page 121

Scenario 11 Request for waiting time extension

| | Comment | Block No. (0) | PCD | | PICC | Block No. (1) | Comment |
|---|---|---|---|---|---|---|---|
| 1. | rule 1 | | $I(0)_0$ | ===> | | 0 | rule D |
| 2. | | | | <=≠= | S(WTX) request | | rule 9 |
| 3. | rule 4 | | $R(NAK)_0$ | =≠=> | | | |
| 4. | time-out | | | <= = | - | | |
| 5. | rule 4 | | $R(NAK)_0$ | ===> | | | |
| 6. | | | | <=== | S(WTX) request | | rule 11 |
| 7. | rule 3 | | S(WTX) response | ===> | | | |
| 8. | rule B | 1 | | <=== | $I(0)_0$ | | rule 10 |
| 9. | | | $I(0)_1$ | ===> | | 1 | rule D |
| 10. | rule B | 0 | | <=== | $I(0)_1$ | | rule 10 |

Scenario 12 Request for waiting time extension

| | Comment | Block No. (0) | PCD | | PICC | Block No. (1) | Comment |
|---|---|---|---|---|---|---|---|
| 1. | rule 1 | | $I(0)_0$ | ===> | | 0 | rule D |
| 2. | | | | <=== | S(WTX) request | | rule 9 |
| 3. | rule 3 | | S(WTX) response | =≠=> | | | |
| 4. | time-out | | | <= = | - | | |
| 5. | rule 4 | | $R(NAK)_0$ | ===> | | | |
| 6. | | | | <=== | S(WTX) request | | rule 11 |
| 7. | rule 3 | | S(WTX) response | ===> | | | |
| 8. | rule B | 1 | | <=== | $I(0)_0$ | | rule 10 |
| 9. | | | $I(0)_1$ | ===> | | 1 | rule D |
| 10. | rule B | 0 | | <=== | $I(0)_1$ | | rule 10 |

Scenario 13 Request for waiting time extension

| | Comment | Block No. (0) | PCD | | PICC | Block No. (1) | Comment |
|---|---|---|---|---|---|---|---|
| 1. | rule 1 | | $I(0)_0$ | ===> | | 0 | rule D |
| 2. | | | | <=== | S(WTX) request | | rule 9 |
| 3. | rule 3 | | S(WTX) response | ===> | | | |
| 4. | | | | <=≠= | $I(0)_0$ | | rule 10 |
| 5. | rule 4 | | $R(NAK)_0$ | ===> | | | |
| 6. | rule B | 1 | | <=== | $I(0)_0$ | | rule 11 |
| 7. | | | $I(0)_1$ | ===> | | 1 | rule D |
| 8. | rule B | 0 | | <=== | $I(0)_1$ | | rule 10 |

© ISO/IEC 2001 – All rights reserved


IPR2025-01232
Apple EX1016 Page 122

Scenario 14 Request for waiting time extension

| | Comment | Block No. (0) | PCD | | PICC | Block No. (1) | Comment |
|---|---|---|---|---|---|---|---|
| 1. | rule 1 | | $I(0)_0$ | ===> | | 0 | rule D |
| 2. | | | | <=== | S(WTX) request | | rule 9 |
| 3. | rule 3 | | S(WTX) response | ===> | | | |
| 4. | | | | <=≠= | $I(0)_0$ | | rule 10 |
| 5. | rule 4 | | $R(NAK)_0$ | =≠=> | | | |
| 6. | time-out | | | <= = | - | | |
| 7. | rule 4 | | $R(NAK)_0$ | ===> | | | |
| 8. | rule B | 1 | | <=== | $I(0)_0$ | | rule 11 |
| 9. | | | $I(0)_1$ | ===> | | 1 | rule D |
| 10. | rule B | 0 | | <=== | $I(0)_1$ | | rule 10 |

### B.3.3 DESELECT

Scenario 15 DESELECT

| | Comment | Block No. (0) | PCD | | PICC | Block No. (1) | Comment |
|---|---|---|---|---|---|---|---|
| 1. | rule 1 | | $I(0)_0$ | ===> | | 0 | rule D |
| 2. | rule B | | | <=== | $I(0)_0$ | | rule 10 |
| 3. | | | S(DESELECT) request | =≠=> | | | |
| 4. | time-out | | | <= = | - | | |
| 5. | rule 8 | | S(DESELECT) request | ===> | | | |
| 6. | | | | <=== | S(DESELECT) response | | rule 3 |

### B.3.4 Chaining

Scenario 16 PCD uses chaining

| | Comment | Block No. (0) | PCD | | PICC | Block No. (1) | Comment |
|---|---|---|---|---|---|---|---|
| 1. | rule 1 | | $I(1)_0$ | ===> | | 0 | rule D |
| 2. | | | | <=≠= | $R(ACK)_0$ | | rule 2 |
| 3. | rule 4 | | $R(NAK)_0$ | ===> | | | |
| 4. | rule B | 1 | | <=== | $R(ACK)_0$ | | rule 11 |
| 5. | rule 7 | | $I(1)_1$ | ===> | | 1 | rule D |
| 6. | rule B | 0 | | <=== | $R(ACK)_1$ | | rule 2 |
| 7. | rule 7 | | $I(0)_0$ | ===> | | 0 | rule D |
| 8. | rule B | 1 | | <=== | $I(0)_0$ | | rule 10 |
| 9. | | | $I(0)_1$ | ===> | | 1 | rule D |
| 10. | rule B | 0 | | <=== | $I(0)_1$ | | rule 10 |


© ISO/IEC 2001 – All rights reserved

IPR2025-01232
Apple EX1016 Page 123

Scenario 17 PCD uses chaining

| | Comment | Block No. (0) | PCD | | PICC | Block No. (1) | Comment |
|---|---|---|---|---|---|---|---|
| 1. | rule 1 | | $I(1)_0$ | ===> | | 0 | rule D |
| 2. | rule B | 1 | | <=== | $R(ACK)_0$ | | rule 2 |
| 3. | rule 7 | | $I(1)_1$ | =≠=> | | | |
| 4. | time-out | | | <= = | - | | |
| 5. | rule 4 | | $R(NAK)_1$ | ===> | | | |
| 6. | | no change | | <=== | $R(ACK)_0$ | | rule 12 |
| 7. | rule 6 | | $I(1)_1$ | ===> | | 1 | rule D |
| 8. | rule B | 0 | | <=== | $R(ACK)_1$ | | rule 2 |
| 9. | rule 7 | | $I(0)_0$ | ===> | | 0 | rule D |
| 10. | rule B | 1 | | <=== | $I(0)_0$ | | rule 10 |
| 11. | | | $I(0)_1$ | ===> | | 1 | rule D |
| 12. | rule B | 0 | | <=== | $I(0)_1$ | | rule 10 |

Scenario 18 PCD uses chaining

| | Comment | Block No. (0) | PCD | | PICC | Block No. (1) | Comment |
|---|---|---|---|---|---|---|---|
| 1. | rule 1 | | $I(1)_0$ | ===> | | 0 | rule D |
| 2. | | | | <=≠= | $R(ACK)_0$ | | rule 2 |
| 3. | rule 4 | | $R(NAK)_0$ | =≠=> | | | |
| 4. | time-out | | | <= = | - | | |
| 5. | rule 4 | | $R(NAK)_0$ | ===> | | | |
| 6. | rule B | 1 | | <=== | $R(ACK)_0$ | | rule 11 |
| 7. | rule 7 | | $I(1)_1$ | ===> | | 1 | rule D |
| 8. | rule B | 0 | | <=== | $R(ACK)_1$ | | rule 2 |
| 9. | rule 7 | | $I(0)_0$ | ===> | | 0 | rule D |
| 10. | rule B | 1 | | <=== | $I(0)_0$ | | rule 10 |
| 11. | | | $I(0)_1$ | ===> | | 1 | rule D |
| 12. | rule B | 0 | | <=== | $I(0)_1$ | | rule 10 |

© ISO/IEC 2001 – All rights reserved


IPR2025-01232
Apple EX1016 Page 124

Scenario 19 PICC uses chaining

| | Comment | Block No. (0) | PCD | | PICC | Block No. (1) | Comment |
|---|---|---|---|---|---|---|---|
| 1. | rule 1 | | $I(0)_0$ | ===> | | 0 | rule D |
| 2. | rule B | 1 | | <=== | $I(1)_0$ | | rule 10 |
| 3. | rule 2 | | $R(ACK)_1$ | =≠=> | | | |
| 4. | time-out | | | <= = | - | | |
| 5. | rule 5 | | $R(ACK)_1$ | ===> | | 1 | rule E |
| 6. | rule B | 0 | | <=== | $I(1)_1$ | | rule 13 |
| 7. | rule 2 | | $R(ACK)_0$ | ===> | | 0 | rule E |
| 8. | rule B | 1 | | <=== | $I(0)_0$ | | rule 13 |
| 9. | | | $I(0)_1$ | ===> | | 1 | rule D |
| 10. | rule B | 0 | | <=== | $I(0)_1$ | | rule 10 |

Scenario 20 PICC uses chaining

| | Comment | Block No. (0) | PCD | | PICC | Block No. (1) | Comment |
|---|---|---|---|---|---|---|---|
| 1. | rule 1 | | $I(0)_0$ | ===> | | 0 | rule D |
| 2. | rule B | 1 | | <=== | $I(1)_0$ | | rule 10 |
| 3. | rule 2 | | $R(ACK)_1$ | ===> | | 1 | rule E |
| 4. | | | | <=≠= | $I(1)_1$ | | rule 13 |
| 5. | rule 5 | | $R(ACK)_1$ | ===> | | no change | |
| 6. | rule B | 0 | | <=== | $I(1)_1$ | | rule 11 |
| 7. | rule 2 | | $R(ACK)_0$ | ===> | | 0 | rule E |
| 8. | rule B | 1 | | <=== | $I(0)_0$ | | rule 13 |
| 9. | | | $I(0)_1$ | ===> | | 1 | rule D |
| 10. | rule B | 0 | | <=== | $I(0)_1$ | | rule 10 |


© ISO/IEC 2001 – All rights reserved

IPR2025-01232
Apple EX1016 Page 125

# Annex C
(informative)

## Block and frame coding overview

This clause gives an overview of the different block and frame coding sent by the PCD. The type of a block respectively frame is indicated by the first byte.

Definitions made in ISO/IEC 14443-3:

| | |
|---|---|
| REQA | (0100110)b (7 bit) |
| WUPA | (1010010)b (7 bit) |
| REQB / WUPB | (00000101)b |
| Slot-MARKER (Type B only) | (xxxx0101)b |
| SELECT (Type A only) | (1001xxxx)b |
| ATTRIB (Type B only) | (00011101)b |
| HLTA | (01010000)b |
| HLTB | (01010000)b |

Definitions made in this part of ISO/IEC 14443:

| | |
|---|---|
| RATS | (11100000)b |
| PPS | (1101xxxx)b |
| I-block | (00xxxxxx)b (not (00xxx101)b) |
| R-block | (10xxxxxx)b (not (1001xxxx)b) |
| S-block | (11xxxxxx)b (not (1110xxxx)b and not (1101xxxx)b) |

© ISO/IEC 2001 – All rights reserved


IPR2025-01232
Apple EX1016 Page 126

The following table describes the first byte of the defined block and frame coding.

**Table C.1 — Block and frame coding**

| Bit | I-block PCB | R-block PCB | S-block PCB DESELECT | S-block PCB WTX | REQB / WUPB | Slot-MARKER | SELECT | ATTRIB | HLTA | HLTB | RATS | PPS |
|---|---|---|---|---|---|---|---|---|---|---|---|---|
| b8 | 0 | 1 | 1 | | 0 | X | 1 | 0 | 0 | 0 | 1 | 1 |
| b7 | 0 | 0 | 1 | | 0 | X | 0 | 0 | 1 | 1 | 1 | 1 |
| b6 | 0 (RFU) | 1 | 0 | 1 | X | X | 0 | 0 | 0 | 0 | 1 | 0 |
| b5 | Chaining | ACK/NAK | 0 | 1 | X | X | 1 | 1 | 1 | 1 | 0 | 1 |
| b4 | CID | CID | CID | | 0 | 0 | X | 1 | 0 | 0 | 0 | X |
| b3 | NAD | 0 (no NAD) | 0 (no NAD) | | 1 | 1 | X | 1 | 0 | 0 | 0 | X |
| b2 | 1 | 1 (RFU) | 1 (RFU) | | 0 | 0 | X | 0 | 0 | 0 | 0 | X |
| b1 | block number | block number | 0 (RFU) | | 1 | 1 | X | 1 | 0 | 0 | 0 | X |


© ISO/IEC 2001 – All rights reserved

IPR2025-01232
Apple EX1016 Page 127

**ICS 35.240.15**

Price based on 34 pages

© ISO/IEC 2001 – All rights reserved