UNITED STATES PATENT AND TRADEMARK OFFICE

BEFORE THE PATENT TRIAL AND APPEAL BOARD

APPLE INC.
Petitioner

v.

TELCOM VENTURES LLC
Patent Owner

Case No. IPR2025-01235
U.S Patent No. 10,674,432

DECLARATION OF STUART LIPOFF

TABLE OF CONTENTS

I. INTRODUCTION 1
A. Education Background and Professional Experience 1
II. MATERIALS CONSIDERED 10
III. OVERVIEW AND LEGAL STANDARDS 13
A. Person of Ordinary Skill in the Art 14
B. Obviousness 14
C. Claim Construction 19
i. "Physiological Parameter" 19
IV. LEVEL OF A PERSON OF ORDINARY SKILL 22
V. SUMMARY OF THE '432 PATENT 24
A. The '432 Patent's Alleged Invention 24
B. The '432 Patent's Prosecution 26
VI. OVERVIEW OF THE TECHNOLOGY 27
A. Fingerprint Authentication 27
B. Wireless Transactions 29
C. NFC-Based Transactions 32
VII. OVERVIEW OF THE PRIOR ART 34
A. Overview of *Carlson* 34
B. Overview of *Holloway* 37
C. Overview of *Jazayeri* 39
D. Overview of *ISO-14443* 40
E. Overview of *Lin* 41
F. Overview of *Sherman* 46
G. Overview of *Murakami* 48
VIII. SUMMARY OF UNPATENTABILITY 50
IX. OPINIONS REGARDING GROUND 1: CLAIMS 1-3, 5-6, AND 10-15 ARE OBVIOUS OVER *CARLSON* IN VIEW OF *HOLLOWAY* AND *ISO-14443* 51
A. Claim 1 51

i. [1(Pre)] A method of operating a smartphone in performing a plurality of financial transactions, the method comprising:.....51

ii. [1(a)] responsive to at least one physiological parameter having been sensed by at least one sensor of the smartphone, enabling a mode to communicate by the smartphone information requesting an authorization; 53

iii. [1(b)] while the mode is enabled, transmitting by the smartphone first data to a first device, the first data relating to a plurality of financial transactions to be conducted;.....61

iv. [1(c)] receiving by the smartphone second data from the first device responsive to said transmitting by the smartphone the first data, the second data relating to the plurality of financial transactions to be conducted and differing from the first data; 62

v. [1(d)] performing a first transaction of the plurality of financial transactions by:.....63

vi. [1(d)(i)] detecting by the smartphone that a proximity condition is satisfied between the smartphone and a first entity, wherein the first entity is distinct from the first device;....63

vii. [1(d)(ii)] establishing, using a first air interface, a wireless short-range communications link between the smartphone and the first entity, in response to the proximity condition having been satisfied between the smartphone and the first entity; 76

viii. [1(d)(iii)] receiving, using the first air interface, a short-range signal from the first entity; and.....78

ix. [1(d)(iv)] responsive to receiving the short-range signal from the first entity, sending by the smartphone to the first entity over the first air interface, information associated with the second data received from the first device; and.....79

x. [1(e)] independent of performing said first transaction, receiving by the smartphone a communications service from a wireless network, using a second air interface that differs from the first air interface,.....79

Carlson, Fig. 1 (annotated).....82

xi. [1(f)] wherein said transmitting by the smartphone first data and said receiving by the smartphone second data are performed over an air interface that differs from the first air interface. 82

B. Claim 2 83

i. The method of claim 1, wherein establishing the wireless short-range communications link between the smartphone and the first entity is performed responsive to at least one physiological parameter having been sensed by at least one sensor of the smartphone. 83

C. Claim 3 84

i. The method of claim 1, wherein sending by the smartphone to the first entity, information associated with the second data, is performed responsive to at least one physiological parameter having been sensed by at least one sensor of the smartphone. 84

D. Claim 5 85

i. [5(a)] The method of claim 1, wherein the method further comprises: performing a second transaction of the plurality of financial transactions by: 85

ii. [5(b)] detecting by the smartphone that a proximity condition is satisfied between the smartphone and a second entity, wherein the second entity is distinct from the first entity and is further distinct from the first device; 85

iii. [5(c)] establishing, using the first air interface, a wireless short-range communications link between the smartphone and the second entity, in response to the proximity condition having been satisfied between the smartphone and the second entity; 86

iv. [5(d)] receiving, using the first air interface, a short-range signal from the second entity; and....87

v. [5(e)] responsive to receiving the short-range signal from the second entity, sending by the smartphone to the second entity over the first air interface, information associated with the second data received from the first device....87

E. Claim 6 87

i. [6(a)] The method of claim 1, wherein said transmitting by the smartphone first data to a first device includes transmitting by the smartphone data relating to a request to pay for a transaction; and 87

ii. [6(b)] wherein said receiving by the smartphone second data from the first device includes receiving by the smartphone data relating to an acknowledgement and/or authorization of enabling a mode/function to pay for a transaction. 88

F. Claim 10 88

i. [10(Pre)] A smartphone that is configured to perform operations associated with a plurality of financial transactions; the operations comprising: 88

ii. [10(a)] responsive to at least one physiological parameter having been sensed by at least one sensor of the smartphone, enabling a mode to communicate by the smartphone information requesting an authorization; 89

iii. [10(b)] while the mode is enabled, transmitting first data to a first device as a precursor to performing the plurality of financial transactions; and 89

iv. [10(c)] receiving second data from the first device responsive to said transmitting the first data; 89

v. [10(d)] performing a first financial transaction of the plurality of financial transactions by: 89

vi. [10(d)(i)] detecting by the smartphone that a proximity condition is satisfied between the smartphone and a first entity, wherein the first entity is distinct from the first device; 89

vii. [10(d)(ii)] establishing, using a first air interface, a wireless short-range communications link between the smartphone and the first entity, in response to the proximity condition having been satisfied between the smartphone and the first entity; 90

viii. [10(d)(iii)] receiving, using the first air interface, a short-range signal from the first entity; and 90

ix. [10(d)(iv)] responsive to receiving the short-range signal from the first entity, sending to the first entity over the first air

interface, information based on the second data received from the first device; and.....90

x. [10(e)] independent of performing a transaction to pay for one or more items, receiving by the smartphone a communications service from a wireless network, using a second air interface that differs from the first air interface,.....90

xi. [10(f)] wherein said transmitting first data and said receiving second data are performed over an air interface that differs from the first air interface.....90

G. Claim 11 90

i. The smartphone of claim 10, wherein establishing the wireless short-range communications link between the smartphone and the first entity is performed responsive to at least one physiological parameter having been sensed by at least one sensor of the smartphone. 90

H. Claim 12 91

i. The smartphone of claim 10, wherein sending by the smartphone to the first entity, information based on the second data, is performed responsive to at least one physiological parameter having been sensed by at least one sensor of the smartphone.....91

I. Claim 13 91

i. The smartphone of claim 10, wherein sending by the smartphone to the first entity, information based on the second data, is performed responsive to a value of at least one parameter associated with the smartphone.....91

J. Claim 14 91

i. [14(a)] The smartphone of claim 10, wherein the operations further comprise: performing a second financial transaction of the plurality of financial transactions by: 91

ii. [14(b)] detecting by the smartphone that a proximity condition is satisfied between the smartphone and a second entity; wherein the second entity is distinct from the first entity and is further distinct from the first device;.....91

iii. [14(c)] establishing, using the first air interface, a wireless short-range communications link between the smartphone and the second entity, in response to the proximity condition having been satisfied between the smartphone and the second entity; 91

iv. [14(d)] receiving, using the first air interface, a short-range signal from the second entity; and 92

v. [14(e)] responsive to receiving the short-range signal from the second entity, sending by the smartphone to the second entity over the first air interface; information associated with the second data received from the first device. 92

K. Claim 15 92

i. [15(a)] The smartphone of claim 10, wherein said transmitting by the smartphone first data to a first device includes transmitting by the smartphone data relating to a request to pay for a transaction; and 92

ii. [15(b)] wherein said receiving by the smartphone second data from the first device includes receiving by the smartphone data relating to an acknowledgement and/or authorization of enabling a mode/function to pay for a transaction. 92

X. OPINIONS REGARDING GROUND 2: CLAIMS 7-8 AND 16-17 ARE OBVIOUS OVER *CARLSON* IN VIEW OF *HOLLOWAY, ISO-14443* AND *LIN* 92

A. Claim 7 92

i. [7(a)] The method of claim 1, comprising: transmitting by the smartphone third data to a second device; the second device being distinct from the first device and further being distinct from the first entity; and 93

ii. [7(b)] receiving by the smartphone fourth data from the second device relating to an acknowledgement and/or authorization of enabling a mode/function to pay for a financial transaction, ... 99

iii. [7(c)] wherein said transmitting by the smartphone third data to a second device and said receiving by the smartphone fourth data from the second device are performed over the air interface that differs from the first air interface. 100

B. Claim 8 100

i. [8(Pre)] The method of claim 1, wherein said operations further comprise: 100

ii. [8(a)] responsive to performing a financial transaction, causing data to be transmitted selectively to a plurality of predetermined devices and further causing data to be received selectively from said plurality of predetermined devices. 100

C. Claim 16 105

i. [16(Pre)] The smartphone of claim 10, wherein said operations further comprise: 105

ii. [16(a)] transmitting third data to a second device; the second device being distinct from the first device and further being distinct from the first entity; and 106

iii. [16(b)] receiving by the smartphone fourth data from the second device relating to an acknowledgement and/or authorization of enabling a mode/function to pay for a financial transaction; 106

iv. [16(c)] wherein said transmitting by the smartphone third data to a second device and said receiving by the smartphone fourth data from the second device are performed over the air interface that differs from the first air interface 106

D. Claim 17 106

i. [17(Pre)] The smartphone of claim 10, wherein said operations further comprise: 106

ii. [17(a)] responsive to performing a financial transaction, causing data to be transmitted selectively to a plurality of predetermined devices and further causing data to be received selectively from said plurality of predetermined devices. 106

XI. OPINIONS REGARDING GROUND 3: CLAIM 9 IS OBVIOUS OVER *CARLSON* IN VIEW OF *HOLLOWAY, ISO-14443,* AND *SHERMAN* 107

A. Claim 9 107

i. The method of claim 1, wherein the second air interface comprises an Orthogonal Frequency Division Multiplexed

and/or an Orthogonal Frequency Division Multiple Access (OFDM/OFDMA) technology. ***107***

XII. OPINIONS REGARDING GROUND 4: CLAIMS 2-4, 11-13 ARE OBVIOUS OVER *CARLSON* IN VIEW OF *HOLLOWAY, ISO-14443,* AND *JAZAYERI* **110**

A. Claim 4 ..... **110**

i. The method of claim 1, wherein sending by the smartphone to the first entity, information associated with the second data, is performed responsive to a value of at least one parameter associated with the smartphone. ***110***

B. Claims 2-4 and 11-13 ..... **117**

XIII. OPINIONS REGARDING GROUNDS 5-8: CLAIMS 1-3, 5-6, AND 10-15 ARE OBVIOUS OVER *CARLSON* IN VIEW OF *MURAKAMI* AND *ISO-14443*; CLAIMS 7-8 AND 16-17 ARE OBVIOUS OVER *CARLSON* IN VIEW OF *MURAKAMI, ISO-14443* AND *LIN*; CLAIM 9 IS OBVIOUS OVER *CARLSON* IN VIEW OF *MURAKAMI, ISO-14443* AND *SHERMAN;* CLAIMS 2-4 AND 11-13 ARE OBVIOUS OVER *CARLSON* IN VIEW OF *MURAKAMI, ISO-14443,* AND *JAZAYERI.* **122**

A. *Murakami's* Teachings **123**

B. *Carlson* Modified Pursuant to *Murakami* **125**

XIV. CONCLUSION **129**

I, Stuart Lipoff, declare the following:

I. INTRODUCTION

1. I have been retained by counsel for Petitioner as a technical expert in the above-captioned case. Specifically, I have been asked to render certain opinions regarding the IPR petition with respect to U.S. Patent No. 10,674,432 (the "'432 Patent"). I understand that the Challenged Claims are 1-17, and my opinions are limited to those claims. A true and correct copy of my Curriculum Vitae, which provides further details about my background and experience, is appended to this Declaration.

A. Education Background and Professional Experience

2. I earned a Bachelor of Science in Electrical Engineering in 1968 and a Bachelor of Science in Engineering Physics, both from Lehigh University. I later completed a Master of Science in Electrical Engineering at Northeastern University in 1974, followed by a Master of Business Administration from Suffolk University in 1983. I also hold a General Radiotelephone Operator License issued by the Federal Communications Commission (FCC) and a Certificate in Data Processing from the Institute for the Certification of Computing Professionals (ICCP). In addition, I am a licensed Professional Engineer (PE) in both the Commonwealth of Massachusetts and the State of Nevada.

3. I am a Fellow of the Institute of Electrical and Electronics Engineers (IEEE) Consumer Electronics, Communications, Computer, Circuits, and Vehicular Technology Groups. Since 1981, I have been a member of the IEEE Consumer Electronics Society National Board of Governors. From 1996 to 1997, I served as the President of the IEEE Consumer Electronics Society, and from 1999 to 2018, I served as the Chairman of the Society's Technical Activities and Standards Committee and the Society's Vice President of Publications. From 2018 to 2023, I also served as the Vice President of Industry and Standards Activities for the IEEE Consumer Technology Society. I currently serve the IEEE Consumer Technology Society on the Board of Governors as The Historian. I have also chaired the search committee for the IEEE Mazura Ibuka Award in consumer electronics.

4. I have published numerous papers in IEEE proceedings and delivered multiple presentations at professional conferences. In the fall of 2000, I served as general program chair for the IEEE Vehicular Technology Conference on advanced wireless communications technology. I have also organized sessions at the International Conference on Consumer Electronics, where I served as the program chairman in 1984. For my contributions to the fields of communications and information technology, I received the IEEE's Centennial Medal in 1984 and the Millenium Medal in 2000.

5. As Vice President and Standards Group Chairman of the Associated of Computer Users (ACU) from 1980 to 1983, I served as the ACU representative to the ANSI X3 Standards Group (now known as the InterNational Committee for Information Technology Standards). From 1976 to 1978, I served as Chairman of the task group on user rule compliance for the FCC's Citizens advisory committee on Citizen's Band Radio.

6. In addition to my involvement with various IEEE organizations, I have also been an elected member of the Society of Cable Telecommunications Engineers, the Association for Computing Machinery, and the Society of Motion Picture and Television Engineers.

7. I am a named inventor on seven U.S. patents related to electronic commerce, electronic device authorization systems, and telecommunications. I have also published articles on data communications in Electronics Design, Microwaves, Electronics Design Network, the Proceedings of the Frequency Control Symposium, Optical Spectra, and numerous IEEE publications.

8. Since beginning my professional career in 1969, I have been heavily involved in the study, analysis, evaluation, design, and implementation of technologies and products related to telecommunications, consumer electronics and electronic appliances. From 1976 to 2001, I worked for Arthur D. Little, Inc. (ADL), where I served as the Vice President and Director of Communications, Information

Technology, and Electronics (CIE) from 1991 to 2001. At ADL, I was responsible for the firm's global CIE practice in laboratory-based contract engineering, product development, and technology-based consulting. I was also involved in pioneering efforts to identify and explore customer-to-business and business-to-business electronic commerce and transaction information processing opportunities (e-commerce). These projects involved technology assessment and analysis as well as developing architectures and systems to support multiple applications.

9. From 1969 to 1972, I worked as Project Engineer for Motorola's Communications Division, where I had project design responsibilities for paging and wireless communications products. While employed at Motorola, I was involved in projects related to paging systems that included digital voice storage, voice compression, and voice synthesis. I also worked on projects that interfaced wireless data communications terminals to public safety computer systems for mobile data retrieval and data entry.

10. From 1972 to 1976, I worked as Section Manager for Bell & Howell Communications Company, where I had project design responsibilities for wireless communication products. The projects I supported included voice recording systems, radio paging systems, and systems related to data retrieval from servers.

11. Throughout my career, I have also contributed to a variety of projects in the areas of e-commerce systems and wireless technologies. These projects include the following.

12. While supporting the Next Generation Network Architecture (NGNA) LLC (consortium of Comcast, Cox and Time Warner), I led a project that developed the advanced architecture needed by the cable industry to support e-commerce transactions, sale of content, and the associated rights management and security needed to support high value applications. This project involved exploration of security tokens, including Smart Cards, to support renewable security means.

13. I participated in several projects for the United States Postal Service (USPS) where I explored roles for the USPS in facilitating e-commerce including directory services and public key certificate authority.

14. I participated in an IBM project to define the range of opportunities in e-commerce for third party providers of systems and services and developing strategy and tactical plans to exploit e-commerce. The e-commerce systems included means for end customers to use human-friendly interfaces to access remote servers for the purpose of information retrieval, shopping, financial payments, and order-placing transactions.

15. I supported the Multimedia Cable Network System consortium of major cable system operators, including Rogers, Comcast, Time Warner, TCI and Cox, in

the development of enhancements to the North American DOCSIS specifications. These enhancements enabled interactive and electronic commerce services for residential and small business users.

16. I supported Mastercard and Visa in the development of applications and security issues associated with the use of smart cards in a mixed environment of remote e-commerce applications over data networks and in-person transactions. This project explored both physical security properties of the card media as well as issues associated with the back-end information processing servers. For example, I explored electronic watermarks resident on a credit card where the watermark digital content was captured at point of sale and then uploaded to the back-end credit card processer so that the card media could be authenticated as genuine.

17. I participated in a project for a multiclient consortium of newspapers and information publishers to understand opportunities for electronic home information and transaction services over data networks using both dedicated videotext terminals and home computers.

18. I studied the security and encryption requirements to support electronic banking in support of a multiclient study of new opportunities for financial industry firms. This work involved consideration of counterfeit projection for media, physical security of systems, and the development of security protocols for home banking videotex terminals. The home banking terminals employed HTML markup

languages for communications with the bank's remote servers for customer self-service applications, as well as facilitating financial transactions.

19. I worked on a project for the grocery industry consortium of the Food Marketing Institute and the Grocery Manufacturers Association, where I developed standards used by the industry for direct exchange electronic data interchange (DEX/UCS EDI). This project focused on developing a business model for vendors that deliver merchandise directly to retail stores. The goal was to enable the capture of legacy paper receipts and customer signatures using handheld portable computers, which would later upload the data to the vendors' billing systems for invoice generation.

20. I worked with Cambridge Silicon Radio to develop a prioritized list of applications for their Bluetooth component offerings. The project mapped applications into specific target customers, and based upon a market analysis, a prioritized roadmap of produces was developed to steer the R&D portfolio. A primary focus of the project was to explore short-range wireless applications for home automation and control.

21. While supporting International Mobile Machines, a firm that licenses patents to cellphone OEMs, I developed a roadmap of future services, architectures, and technology to support alternative visions of the development of cellular. I then worked with the firm to generate R&D projects designed to increase the base of

patents for IMM to license in the future. The service concepts I generated employed technologies that supported distributed software applications that have a graphical user interface.

22. I worked as a technical advisor for the banks providing financing to the Iridium Mobile Satellite Service, where I assisted in developing the contracts between the banks and Motorola. This role included examination of the manufacturing costs, methods, and processes of Motorola's Subscriber Products Group including voice and data applications of cell phones, pagers, and related portable wireless data communication devices.

23. I supported Symbol Technology, a manufacturer of hand-held industrial computing products, where I co-developed the protocol for a wireless local area network that was the basis for the current IEEE 802.11 wireless LAN standard. Later, I worked with this same client to select voice over internet protocol (VoIP) codecs and algorithms that support the client's current product offering including cordless industrial voice telephone over a quality of service (QoS) managed wireless IP network.

24. I helped lead a project for CableLabs that studied the technology and economics of wireless personal communications technology. The project included the selection of CDMA technologies and the development of strategies to compete with incumbent cellular carriers including the offering of non-voice multimedia

services. This effort led to the formation of a consortium between Sprint and the cable MSOs that has evolved into the present PCS business.

25. I served as the CTO for a pre-revenue startup electronic wallet venture and interacted with several cellular handset and PDA OEMs exploring the integration of this electronic wallet technology into next generation products.

26. For an association of credit card issuers, I performed several projects related to security properties of card media. These projects involved the consideration and evaluation of technologies including magnetic watermark, smart cards, optical storage cards, and holographic storage cards.

27. For an operator of a credit card authorization network, I investigated new card media technologies and their contribution to system security and impact upon operational logistics. This study involved consideration of smart cards, optical storage cards, card calculators, and other developing technology.

28. For The New York Metropolitan Transit Authority (MTA), I supported a major project to develop recommendations for an automatic fare collection system. The project involved investigation of smart cards and other pre-paid card media and compatible reading equipment. The technology review considered tradeoffs in cost, security, resistance to tampering, ease of use, reliability, and range of features/functions.

29. My background, training, and experience have made me an expert in telecommunications broadly, with specific expertise in wireless communications, e-commerce systems, electronic consumer devices, and communication standards.

II. MATERIALS CONSIDERED

30. I have relied upon my education, knowledge, and experience with mobile communication devices that perform secure transactions, as well as the other materials as discussed in this declaration in forming my opinions.

31. In developing my opinions, I have considered the following materials:

Exhibit	Description
1001	U.S. Patent No. 10,674,432 ("*the '432 Patent*")
1002	File History of the '432 Patent ("*File History*")
1003	Intentionally Left Blank
1004	Intentionally Left Blank
1005	U.S. Patent No. 8,229,852 to Carlson ("*Carlson*")
1006	U.S. Patent No. 9,558,485 to Griffin and Stone ("*Griffin*")
1007	U.S. Patent Publication No. 2008/0155268 to Jazayeri et al. ("*Jazayeri*")
1008	Intentionally Left Blank
1009	WIPO International Publication No. WO 01/95246 to Murakami et al. ("*Murakami*")
1010	Intentionally Left Blank
1011	Intentionally Left Blank
1012	Intentionally Left Blank
1013	Intentionally Left Blank
1014	U.S. Patent Publication No. 2007/0232358 to Sherman ("*Sherman*")
1015	Intentionally Left Blank
1016	Int'l Org. for Standardization & Int'l Electrotechnical Comm'n, *ISO/IEC 14443-1: Identification Cards—Contactless Integrated Circuit(s) Cards—Proximity Cards—Part 1: Physical Characteristic*s (1st ed. Apr. 15, 2000)

	Int'l Org. for Standardization & Int'l Electrotechnical Comm'n, *ISO/IEC 14443-2: Identification Cards—Contactless Integrated Circuit(s) Cards—Proximity Cards—Part 2: Radio Frequency Power and Signal Interface* (1st ed. July 1, 2001) Int'l Org. for Standardization & Int'l Electrotechnical Comm'n, *ISO/IEC 14443-3: Identification Cards—Contactless Integrated Circuit(s) Cards—Proximity Cards—Part 3: Initialization and Anticollision* (1st ed. Feb. 1, 2001) Int'l Org. for Standardization & Int'l Electrotechnical Comm'n, *ISO/IEC 14443-4: Identification Cards—Contactless Integrated Circuit(s) Cards—Proximity Cards—Part 4: Transmission Protocol* (1st ed. Feb. 1, 2001) (collectively, "*ISO-14443*")
1017	Intentionally Left Blank
1018	Intentionally Left Blank
1019	Intentionally Left Blank
1020	Merriam-Webster's Collegiate Dictionary (10th ed. 1998) ("*Merriam-Webster*")
1021	Smart Card Alliance, *Contactless Payment and the Retail Point of Sale: Applications, Technologies and Transaction Models* (Mar. 2003) ("*Smartcard Alliance 2003*")
1022	Sony Corp., *Philips and Sony Announce Strategic Cooperation to Define Next-Generation Near Field Radio-Frequency Communications* (Sept. 5, 2002), https://www.sony.com/en/SonyInfo/News/Press/200209/02-0905E/ ("*Sony*")
1023	Smart Card Alliance, *Proximity Mobile Payments: Leveraging NFC and the Contactless Financial Payments Infrastructure* (Sept. 2007) ("*SC Alliance 2007*")
1024	Agnieszka Zmijewska, *Evaluating Wireless Technologies in Mobile Payments—A Customer Centric Approach*, in Proc. Int'l Conf. on Mobile Bus. (ICMB '05) (2005) ("*Zmijewska*")
1025	Kaveh Pahlavan & Prashant Krishnamurthy, *Principles of Wireless Networks* (Prentice Hall 2002) ("*Wireless Networks*")
1026	Vedat Coskun, Kerem Ok & Busra Ozdenizci, *Near Field Communication: From Theory to Practice* (John Wiley & Sons Ltd. 2012) ("*NFC Textbook*")
1027	Klaus Finkenzeller, RFID Handbook: Fundamentals and Applications in Contactless Smart Cards, Radio Frequency

	Identification, and Near-Field Communication (2d ed. John Wiley & Sons Ltd 2003) ("*RFID Handbook*")
1028	Rudolf Graf, *Modern Dictionary of Electronics* (7th ed. Newnes 1999) ("*Graf*")
1029	Harry Newton, *Newton's Telecom Dictionary* (23d ed. Flatiron Publishing 2007) ("*Newton's Telecom Dictionary*")
1030	U.S. Patent No 10,380,573 to Lin et al. ("*Lin*")
1031	Intentionally Left Blank
1032	WIPO International Publication No. WO 02/49322 to Holloway and Falck ("*Holloway*")
1033	Intentionally Left Blank
1034	Brent A. Miller & Chatschik Bisdikian, *Bluetooth Revealed: The Insider's Guide to an Open Specification for Global Wireless Communications* (Prentice Hall 2001) ("*Bluetooth Revealed*")
1035	CNET, *Photos: Hands-On With the Porsche P9521 Phone* (2007), https://www.cnet.com/tech/mobile/photos-hands-on-with-the-porsche-p9521-phone/ ("*Porsche P9521*")
1036	Mobile Phone Museum, *Portégé G910* (Jan. 21, 2008), https://www.mobilephonemuseum.com/phone-detail/portege-g910 ("*Toshiba G910*")
1037	CNET, *Toshiba Portege G500* Review (June 2007), https://www.cnet.com/reviews/toshiba-portege-g500-review/ ("*Toshiba G500*")
1038	CNET, *Toshiba Portégé G900 Review* (2007), https://www.cnet.com/reviews/toshiba-portege-g900-review/ ("*Toshiba G900*")
1039	Farpoint Group, *The Broad Reach of Biometrics: Fingerprint Recognition and Mobile Security*, Farpoint Grp. Tech. Note No. FPG 2008-435.1 (Nov. 2008), https://media.techtarget.com/searchMobileComputing/downloads/Fingerprint_Recognition_and_Mobile_Security.pdf ("*Farpoint Group*")
1040	U.S. Patent No. 8,943,580 to Fadell et al. ("*Fadell*")
1041	Inst. of Elec. & Elecs. Eng'rs, *IEEE Standard for Information Technology—Telecommunications and Information Exchange Between Systems—Local and Metropolitan Area Networks—Specific Requirements—Part 15.1: Wireless Medium Access Control (MAC) and Physical Layer (PHY) Specifications for*

	Wireless Personal Area Networks (WPANs), IEEE Std 802.15.1™-2005 (June 14, 2005) ("*Bluetooth*")

32. I have considered these materials from the viewpoint of a person of ordinary skill in the art ("POSITA") as of the priority date of the '432 Patent. For the purposes of this declaration, I have been asked to assume that the priority date of the '432 Patent is November 4, 2008. I note that my opinions provided in this Declaration are made from the perspective of a POSITA as of this priority date of the '432 Patent, unless expressly stated otherwise. To the extent that I use any verb tense in this Declaration that is present tense (e.g., "a POSITA would understand" instead of "a POSITA would have understood"), such verb tense should be understood to be my opinion as of the '432 Patent's priority date (again, unless expressly stated otherwise). I merely use the present verb tense for ease of reading.

III. OVERVIEW AND LEGAL STANDARDS

33. In formulating my opinions, I have been instructed to apply certain legal standards. I am not a lawyer. I do not offer any testimony regarding what the law is. Instead, the following sections summarize the law as I have been instructed to apply it in formulating and rendering my opinions found later in this declaration. I understand that, in an inter partes review ("IPR") proceeding, patent claims may be deemed unpatentable if it is shown that they are anticipated or rendered obvious in view of the prior art. I understand that prior art in an IPR is limited to patents or

printed publications that predate the priority date of the patent at issue. I understand that questions of claim clarity (definiteness) and enablement cannot be considered as a ground for considering the patentability of a claim in these proceedings.

A. Person of Ordinary Skill in the Art

34. I understand that the ’432 Patent, the record of the proceedings at the Patent Office (which I understand is called the “File History” or “Prosecution History”), and the teachings of the prior art are evaluated from the perspective of a POSITA. I understand that the factors considered in determining the ordinary level of skill in the art may include: (i) the levels of education of the inventor; (ii) the types of problems encountered in the art; (iii) prior art solutions to those problems; (iv) the rapidity with which innovations are made; (v) the sophistication of the technology; and (vi) the educational level of persons working in the field.

35. I understand that a person of ordinary skill in the art is not a specific real individual, but rather a hypothetical individual having the qualities reflected by the factors above. The hypothetical person is presumed to have the same level of skill as the typical practitioner of the art and is presumed to have knowledge of all prior art in the relevant field. I understand that the inventor’s actual knowledge or lack of knowledge of prior art reference is irrelevant to the obviousness determination.

B. Obviousness

36. I understand that a claim may be invalid under 35 U.S.C. § 103(a) if the subject matter described by the claim as a whole would have been "obvious" to a POSITA in view of a single or combination of prior art references at the time the claimed invention was made. I further understand that a POSITA is assumed to know and to have all relevant prior art in the field of endeavor covered by the patent-in-suit and all analogous prior art. I understand that obviousness in an IPR proceeding is evaluated using a preponderance of the evidence standard, which means that the claims must be more likely obvious than nonobvious.

37. I also understand that an obviousness determination includes the consideration of various factors including: (1) the scope and content of the prior art, (2) the differences between the prior art and the claim at issue, and (3) the level of ordinary skill in the pertinent art. I understand that secondary considerations of non-obviousness such as commercial success, long-felt but unresolved needs, failure of others, and so forth may be assessed as well. I have been informed that an obviousness analysis must consider the full scope of the claims to avoid impermissibly using hindsight to invalidate a patent.

38. In considering whether certain prior art renders a particular patent claim obvious, I have been informed that I can consider the scope and content of the prior art, including the fact that a POSITA would regularly look to the disclosures in patents, trade publications, journal articles, conference papers, industry standards,

product literature and documentation, texts describing competitive technologies, requests for comment published by standard setting organizations, and materials from industry conferences, as examples.

39. I have been informed that to establish that a claimed invention was obvious based on a combination of prior art elements, an articulation of the reason(s) why a claimed invention would have been obvious must be provided. Specifically, I have been informed that the prior art, either as a single reference or a combination of multiple items of prior art, renders a patent claim obvious when there was an apparent reason for a POSITA, at the time of the invention, to combine or modify the prior art. Rationales for combining or modifying the prior art include, but are not limited to, any of the following: (A) combining prior art methods according to known methods to yield predictable results; (B) substituting one known element for another to obtain predictable results; (C) using a known technique to improve a similar device in the same way; (D) applying a known technique to a known device ready for improvement to yield predictable results; (E) trying a finite number of identified, predictable potential solutions, with a reasonable expectation of success; (F) identifying that known work in one field of endeavor may prompt variations of it for use in either the same field or a different one based on design incentives or other market forces if the variations are predictable to one of ordinary skill in the art; or (G) identifying an explicit teaching, suggestion, or motivation in the prior art that

would have led one of ordinary skill to modify the prior art reference or to combine the prior art references to arrive at the claimed invention.

40. I have also been informed that where there is a motivation to combine, claims may be rejected as obvious provided a POSITA would have had a reasonable expectation of success regarding the proposed combination. I have also been informed that common sense may be considered. Common sense teaches that familiar items may have obvious uses beyond their primary purposes. I have been informed that if the combination was obvious to try (regardless of whether it was actually tried) or leads to anticipated success, then it is likely the result of ordinary skill and common sense rather than non-obvious innovation.

41. I have been informed that the existence of an explicit teaching, suggestion, or motivation to combine known elements of the prior art is a sufficient, but not a necessary, condition to a finding of obviousness. In determining whether the subject matter of a patent claim is obvious, neither the particular motivation nor the avowed purpose described in the patent-in-suit controls. I have been further informed that the obviousness analysis may consider the effects of demands known to the technological community or present in the marketplace and the background knowledge possessed by a POSITA. These issues may be considered to determine whether there was an apparent reason to combine the known elements in the fashion claimed by the patent.

42. I have been informed that it is improper to combine references where the references teach away from their combination. A reference may be said to teach away when a POSITA, upon reading the reference, would be discouraged from following the path set out in the reference, or would be led in a direction divergent from the path that was taken by the patent applicant. I have also been informed that a reference does not teach away if it merely expresses a general preference for an alternative invention but does not criticize, discredit, or otherwise discourage investigation into the invention claimed.

43. I am informed that even if a case of obviousness is established, the final determination of obviousness must also consider "secondary considerations" if presented. Secondary considerations include: (a) commercial success of a product due to the merits of the claimed invention; (b) a long-felt, but unsatisfied need for the invention; (c) failure of others to find the solution provided by the claimed invention; (d) deliberate copying of the invention by others; (e) unexpected results achieved by the invention; (f) praise of the invention by others skilled in the art; (g) lack of independent simultaneous invention within a comparatively short space of time; and (h) teaching away from the invention in the prior art.

44. I have been further informed that secondary considerations evidence is only relevant if the offering party establishes a connection, or nexus, between the evidence and the claimed invention. The nexus cannot be based on prior art features.

The establishment of a nexus is a question of fact. While I understand that Patent Owner here has not offered any secondary considerations at this time, I will supplement my opinions should Patent Owner raise secondary considerations during the course of this proceeding.

C. Claim Construction

45. I understand that the claim terms in an IPR proceeding are construed according to their plain and ordinary meaning as understood in light of the claim language, the patent's description, and the prosecution history viewed from the perspective of a POSITA. I further understand that where a patent defines claim language, the definition of the patent controls, even if there are other definitions that might be understood by those working in the art. Unless noted otherwise, I have applied this plain and ordinary meaning for all claim language.

46. I have been instructed to adopt the following construction for purposes of this proceeding:

i. "Physiological Parameter"

47. The Challenged Claims each require sensing a "physiological parameter[.]" The intrinsic support for this limitation is slim. Indeed, there are no specific examples described beyond the following list of parameters associated with the device, its environment, or its user:

> velocity, acceleration, ToD, ToM, ToY, humidity, temperature, height, level of brightness, level of darkness***, a blood pressure, a heart rate, a blood content, a physiological state***, a psychological state, etc.

'432 Patent, 6:14-25.

48. A POSITA would understand that blood pressure, heart rate, blood content, a physiological state, and a psychological state are examples of "parameters" that may be associated with the user. '432 Patent, 6:14-25. A POSITA would further understand that the common thread across this entire list, including the physiological parameters[1], is that each exemplary parameter is dynamic in nature and fluctuates over time. Each of blood pressure, heart rate, blood content, a physiological state, and a psychological state are known to be variable in a person across the span of a week, a day, an hour, or even a minute. Supporting this understanding, all other examples identified by the '432 Patent, including velocity, acceleration, ToD, ToM, ToY, humidity, temperature, height, level of brightness, and level of darkness, are also variable. Focusing on the user-related parameters, a user's blood pressure, heart rate, blood content, physiological state, and psychological state

[1] Physiology is "a branch of biology that deals with the functions and activities of life or of living matter (as organs, tissues, or cells) and of the physical and chemical phenomena involved." *Merriam-Webster* (Ex. 1020), 878. A POSITA would understand that blood pressure, heart rate, blood content, and a physiological state are examples of physiological parameters.

are examples of parameters that, by their nature, fluctuate over time. For example, blood pressure and heart rate are known to fluctuate during the day in response to certain factors, including stress and physical activity. Similarly, blood content, such as blood-alcohol content, is further known to fluctuate. Because these parameters fluctuate in time, a POSITA would understand that the value for the parameter is a datapoint representing a snapshot of the variable parameter in time, as the value would be known to *not* be constant across time. For example, a given user may have a normal resting heart rate in a range of 55-60 beats per minute. However, a POSITA would understand that the value for the heart rate parameter may be 100 beats per minute at one point in time following a strenuous activity. But at another point in time, the value for the heart rate parameter may fall back to the normal resting heart rate of 60 beats per minute following a sufficient rest time.

49. I have been asked to consider whether biometric authentication—in the form of a fingerprint or facial geometry—satisfies sensing a "physiological parameter." Biometrics such as fingerprints and facial structure are static, fundamentally different from the variable parameters described by the specification. Fingerprints and facial structure, being static and substantially unique to a person, have long been used to authenticate people. In other words, they do not fluctuate over time and do not satisfy criterion *only some of the time*, as certain claims require. To analogize, static biometric data is like a key. The key does not change over time.

Using a unique biometric such as a fingerprint to authenticate a user is effective precisely because that datapoint is unique and doesn't change.

50. I have been asked to interpret the claims broadly for the purposes of Grounds 1-4. In these grounds, sensing physiological parameters is satisfied by fingerprint-based biometric authentication. Proposed Grounds 5-8 interpret the claims more narrowly and consistent with the specification. In these grounds, sensing a physiological parameter is satisfied by sensing a datapoint representing a snapshot of the parameter in time (e.g., blood flow, heart rate, and blood pressure).

IV. LEVEL OF A PERSON OF ORDINARY SKILL

51. Based on my review and analysis of the '432 Patent, the cited prior art, and the ordinary skill factors described in this section, a POSITA in the field the '432 Patent at the time of the earliest possible priority date (November 4, 2008) would have been knowledgeable regarding the field of mobile communication devices using mobile payment systems and wireless communication systems, including short-range communication technologies. In my experience working in this field, most workers of ordinary skill in the art as of the earliest possible priority date of November 4, 2008, would have had a bachelor's degree in computer science, electrical engineering, computer engineering or equivalent from an accredited academic program with a year of work experience with mobile payment systems or wireless communication systems. A POSITA would also have possessed a working

knowledge of short-range communication technologies in portable wireless devices. A person with less relevant practical experience but with additional education can also qualify as a POSITA in the field of the ’432 Patent. Alternatively, a person with less relevant education but with additional relevant experience can also qualify as a POSITA in the field of the ’432 Patent. When I refer to the understanding of a POSITA, I am referring to the understanding of such a person as of November 4, 2008.

52. As of November 4, 2008, I had more than ordinary skill in the art. I am, however, familiar with the skills and knowledge of those I would have considered to be of ordinary skill in the art as of that date. For example, I regularly worked with such individuals and had myself worked in the fields of telecommunications, electronic commerce systems, and mobile information technology for over 50 years. I earned a Bachelor of Science in Electrical Engineering in 1968 and a Bachelor of Science in Engineering Physics, both from Lehigh University. I later completed a Master of Science in Electrical Engineering at Northeastern University in 1974, followed by a Master of Business Administration from Suffolk University in 1983. I have many years of professional experience working with mobile payment systems and wireless communication systems. Since beginning my professional career, I have interacted with many professionals that would meet the definition of a POSITA.

53. My opinions provided in this declaration would not change in view of minor modifications to this level of ordinary skill

V. SUMMARY OF THE '432 PATENT

A. The '432 Patent's Alleged Invention

54. The '432 Patent is generally directed to "adaptive enablement of one or more communications modes based upon having satisfied a proximity criterion." '432 Patent (Ex. 1001), 1:22-25.

55. The '432 Patent alleges that prior devices suffered by too rigidly offering a wide range of functions at all times, rather than enabling/prioritizing certain functionality only when appropriate. *Id.*, 1:36-44 (noting a device may be configured to prioritize "wallet" functionality "only when it is time to pay for an item and not act as a wallet when there is no need"). The '432 Patent purports to solve this issue with "systems, devices and/or methods that may be used to enable adaptively one or more modes/functions of a device based upon having satisfied by the device (or another device) a proximity condition/criterion." *Id.*, 1:46-51.

56. The '432 Patent provides three examples/applications. In the first, a vehicle radiates a signal containing its identity and a mobile device detects this signal when proximate the vehicle. *Id*., 4:34-6:10. If the detected vehicle identity matches one stored in the device, a function such as "pay toll" is enabled in the mobile device, allowing the device to pay tolls during travel. *Id*., 4:40-53. Once enabled, the mobile

device may detect a signal radiated from a toll booth access point, confirming proximity to the toll booth, which then causes the mobile device to transmit information causing money to be debited from the user's account. *Id*., 4:53-61. This pay toll function remains enabled while the mobile device is in the vehicle, and in some embodiments, further considers sensed parameters like vehicle velocity and acceleration. *Id*., 5:10-26.

57. In a second example, a mobile device estimates (1) its location and (2) another parameter associated with the environment (e.g., humidity, temperature, or brightness), the mobile device (e.g., velocity or acceleration), or the user (e.g., blood pressure, heart rate, blood content, physiological state or psychological state). *Id*., 6:14-8:9. Based on the estimated location and/or parameter value, a particular communication mode is enabled or preferred from among several modes. *Id*., 6:20-7:17. The patent fails to describe use cases captured by this second example with any level of specificity.

58. In a third example, the mobile device is used in conjunction with a shopping cart to track groceries placed in the cart and to purchase said groceries at a checkout counter. *Id.*, 8:12-8:62. The cart detects when items are placed in and taken out of the cart, and price information is transmitted to the mobile device. *Id.*, 8:32-48. When the device is proximate to a checkout counter, a pay function of the

device may be enabled that allows the customer to pay for the products. *Id.*, 8:49-62.

59. The Challenged Claims do not align with any of these examples. Instead, they recite methods and systems for using a smartphone to conduct a financial transaction with an entity. *See id.*, Claims 1 and 6. The financial transaction functionality is enabled when (1) the user's device is proximate an entity and (2) a physiological parameter is sensed. *Id*.

B. The '432 Patent's Prosecution

60. The '432 Patent issued from U.S. Appl. No. 16/251,834 (the "'834 Application") filed on January 18, 2019. The '834 Application is a continuation that tracks priority through a string of continuations to U.S. Appl. No. 12/264/711 filed November 4, 2008, now U.S. Patent No. 9,462,411. I have been asked to apply November 4, 2008, as the priority date.

61. During prosecution, the Examiner initially rejected claims 1–8 for non-statutory double patenting and under 35 U.S.C. § 103. In response, Patent Owner amended claims 1, 3–5, and 7–8, added claims 9–19, and traversed the double patenting rejection, arguing the cited art did not teach transmitting data over different air interfaces. *File History* (Ex. 1002), 154. After a final rejection based on new prior art, Patent Owner filed an RCE with amended claims, contending the art still failed to teach communication responsive to physiological parameters. *Id.*, 253. Following

an interview, claims 9–24 were cancelled, a terminal disclaimer was filed, and the Examiner allowed the claims. *Id.,* 262-277.

VI. OVERVIEW OF THE TECHNOLOGY

A. Fingerprint Authentication

62. Development of advanced functionality and increasingly large amounts of data stored on cellular telephones and personal digital assistants (PDA) necessitated advanced authentication methods for a user to prove his/her identity. While PINs and passwords can be useful, they can be ineffective for a variety of reasons. *Fadell* (Ex. 1040), 1:34-50. Biometric sensors embedded in cellular telephones, smartphones, and PDAs became a popular solution by November 2008. For example, Apple filed a patent titled "Embedded Authentication Systems in an Electronic Device" in September 2008. *Id.* Title. *Fadell* was directed towards "a fingerprint sensor in an input mechanism instead of providing a fingerprint sensor in a separate part of the device house." *Id.,* Abstract. *Holloway* also disclosed a mobile telephone with a fingerprint scanner. *Holloway* (Ex. 1032), 3:29-28. Other organizations and companies developed similar devices with fingerprint authentication sensors. For example, Atrua Technologies, Porsche P'9521, Windows Mobile devices, including the Toshiba G910, G900, and G500 were examples of devices with embedded fingerprint sensors. *Farpoint Group* (Ex. 1039), 5-6, 9. I

have included images of some commercially available devices that had an integrated fingerprint scanner as of November 2008.

Porsche P9521 (Ex. 1035), top-left. *Toshiba G910* (Ex. 1036), top-right. *Toshiba G900* (Ex. 1038), bottom-left. *Toshiba G500* (Ex. 1037), bottom-right.

B. Wireless Transactions

63. Contactless payment options to perform non-cash transactions involving a consumer's device and a merchant's point of sale have existed in the marketplace for decades. *SC Alliance 2003* (Ex. 1021), 6. An early example of a contactless payment system is RFID technology used by toll-roads, available since at least the 1980's. *Id.*, 7. By the early 2000's, several organizations offered contactless payment options, including Hong Kong Octopus Card, ExxonMobil Speedpass, Visa, and MasterCard PayPass. *Id.*, 7-13. Most of these options were compatible with contactless payment technologies, including proximity (ISO/IEC 14443 compliant) and vicinity (ISO/IEC 15693 compliant) smart cards operating at 13.56 MHz, low-frequency RFID solutions operating less than 300 KHz, or ultra-high frequency solutions operating at 900 to 928 MHz. *Id.*, 18-24.

64. Contactless payment options provided multiple benefits to both the consumer and the merchant. For example, the consumer is able to maintain control of the credit card, rather than handing it to a clerk. *SC Alliance 2003*, 12. Merchants enjoy faster transaction times, increased revenue from increased customer loyalty, lower operational costs, and others. *Id.,* 14.

65. However, the merchant experiences some drawbacks to accepting contactless payment. The merchant is responsible for upgrading and maintaining the point-of-sale terminals that enable contactless credit card payment. *Id.*, 15 (discussing retailer maintenance costs), 30-31 (discussing merchant/retailer investment in POS terminals), 44 (lower maintenance costs for retailer). Nevertheless, merchants still benefited from the adoption of these new payment options. *Id.*, 14.

66. One early contactless payment option was contactless smart cards based on ISO/IEC 14443 technology standard, discussed in more detail below. *SC Alliance 2003*, 18. Smart cards based on ISO 14443 operated at 13.56 MHz and were limited to an operational range of up to 4 inches (10 cm). *Id.* This short operational range is beneficial to the security of the transaction as the close proximity reduces unintended communication with malicious eavesdroppers. *Id.,* 19. Other smart cards were compliant with ISO/IEC 15693, providing an operational range up to 1 meter. *Id.*, 20. The longer operational range was considered beneficial for drive-through restaurants and employee access badges. *Id.*

67. In 2002, Sony and Philips announced a joint development of Near-field Communication ("NFC"). *Sony* (Ex. 1022), 1. Sony and Philips described NFC as "short-range communication networks between consumer devices." *Id*. Indeed, NFC was known to operate at 13.56 MHz at distances up to 20 cm. *SC Alliance 2003,* 27.

See also, RFID Handbook (Ex. 1027), 241 (discussing that a typical reader can operate up to 10 cm). Sony envisioned a variety of use cases for the new technology, including "a convenient communication method for services such as payment (including credit cards), ticketing, and accessing online entertainment content (e.g., gaming) through the devices." *Sony*, 1. Sony imagined that the "consumer's primary NFC device (e.g., mobile phone or PDA) acts as a smart key to gain access to chosen services from any NFC device, anywhere, anytime." *Id*.

68. NFC-based mobile transactions are the same as contactless debit and credit cards used in the United States. *SC Alliance 2007* (Ex. 1023), 7. To make mobile payments with NFC-enabled devices, the device is provisioned with a version of the credit or debit card issued by the consumer's financial institution. *Id.,* 6. The payment account information is stored in a secure area of the phone and can be communicated to a merchant's point of sale terminal using NFC. *Id.* The payment and settlement processes of mobile device-based transactions are the same as those of a traditional credit or debit card transaction. *Id.* That is, payment data is linked to a payment card issued to the consumer, and the money itself is not stored on the mobile device. *Id.*, 7. As of 2007, a variety of mobile payment programs were either announced or successfully launched. *Id.*, 8-10. NFC-based mobile transactions offered multiple benefits to the consumer, including a quick transaction time that did not rely on a pairing process and availability even when the device is turned off or

no cellular coverage is available. *Zmijewska* (Ex. 1024), 6-7. Further, NFC allows a mobile device to operate in a power-saving mode, where the device does not need to power the RF communication interface as the communication can be powered by only one side of the communication. *Griffin* (Ex. 1006), 5:4-21.

69. In the United States, radio spectrum falls into two broad categories: licensed and unlicensed frequencies. *Wireless Networks* (Ex. 1025), 11. NFC, operating on 13.56 MHz, is considered an unlicensed frequency. *Griffin,* 4:32-42 ("no licenses are required for use of the NFC devices in the RF band"). Wi-Fi and Bluetooth similarly operate on unlicensed frequencies. *Wireless Networks,* 20. However, cellular operates on licensed frequencies. *Id.,* 20.

C. NFC-Based Transactions

70. NFC was adopted as a standard by a number of organizations, including Europe's ECMA in 2002, the International Organization for Standardization ("ISO") and the International Electrotechnical Commission ("IEC") in 2003, the NFC Forum in 2004, and the European Telecommunications Standards Institute. *NFC Textbook* (Ex. 1026), 8-9. NFC was standardized in ISO/IEC 18092, ECMA-340, ETSI 102.190, ISO/IEC 21481, and ECMA-352. *Griffin*, 2:3-26. Because NFC is based on existing technology and uses the same working principles, it is compatible with ISO/IEC 14443 and ISO/IEC 15693. *Griffin*, 2:27-36. *See also, NFC Textbook,* 7, 92-94.

71. ISO 14443 is an RFID technology enabling proximity transactions between a proximity card and an RFID reader. *NFC Textbook,* 92. The RF layer of NFC is compatible with ISO 14443. *Id.* ISO 14443 defined the physical characteristics of the smart card, the RF power and signal interface, the initialization and anti-collision protocols, and the transmission protocol. *Id.*, 93.

72. NFC broadly encompasses three types of devices: an NFC-enabled mobile phone, an NFC tag, and an NFC reader. *NFC Textbook,* 8, 11. There are three operating modes within NFC: 1) Reader/writer mode providing communication between an NFC-enabled mobile phone and an NFC tag; 2) Peer-to-peer mode providing communication between two NFC-enabled mobile phones; and 3) Card emulation mode providing communication between an NFC-enabled mobile phone, acting as a contactless smart card, and an NFC reader. *Id.*, 12. In reader/writer mode, an NFC-enabled mobile phone can read data stored on an NFC tag, such as a smart poster, wirelessly transferring URLs, phone numbers, etc. *Id.*, 12-13. In peer-to-peer mode, two mobile phones can exchange data, such as business cards images, videos, or initiate Bluetooth pairing. *Id.*, 13. Finally, card emulation mode allows a mobile phone to emulate a smart card for performing secure, contactless transactions. *Id.*

73. Being compatible with ISO 14443, an RFID technology, NFC encompasses characteristics of RFID technology. For example, ISO 14443 devices are inductively coupled, meaning the magnetic field generated by the RFID/NFC

reader device powers the circuit of the NFC tag. *RFID Handbook,* 40-42. In the near field, the magnetic field strength follows a relationship of $1/d^3$, where d is the distance from the antenna. *Id.,* 114. Additionally, NFC communications are half-duplex, which "[r]efers to a communication channel that can receive and transmit, but not simultaneously." *Graf* (Ex. 1028)*,* 335. In other words, "when one device is transmitting, the other has to listen and can start transmitting data after the first one finishes." *NFC Textbook,* 12. *See also, RFID Handbook,* 40 ("In the half-duplex procedure (HDX) the data transfer from the transponder to the reader alternates with data transfer from the reader to the transponder.").

VII. OVERVIEW OF THE PRIOR ART

A. Overview of *Carlson*

74. I have been informed that U.S. Patent No. 8,229,852 to Carlson ("*Carlson*") (Ex. 1005) was filed June 24, 2008, and is prior art to the '432 Patent under at least 35 U.S.C. § 102(e) (pre-AIA). I have also been informed that *Carlson* was neither cited nor considered during the prosecution of the '432 Patent.

75. *Carlson* describes a method and system for conducting transactions between a portable wireless device, such as a cellular phone or PDA, and a contactless reader using a pseudo primary account identifier (PPAI) to prevent an unauthorized user from obtaining and using the primary account identifier (PAI).

Carlson, Abstract, 3:12-15, 2:39-55, 9:63-64. The PPAI represents a "bogus, fake, decoy [or] substitute" PAI to increase user security. *Id.,* 5:30-56.

76. *Carlson* explains that the transaction may begin when the user unlocks the wireless device 102 using biometric information (e.g., fingerprint data). *Id.*, 12:13-24. Once unlocked, the user of the device may then "select which virtual card they wish to use to conduct the transaction[,]" where the "virtual card corresponds to an account that the user has with an issuer and may be identified by the issuer through the use of a primary account identifier." *Id.*, 12:25-29.

77. The device then sends a request for a PPAI that corresponds with a primary account identifier from a payment processing network 110. *Id.*, 12:34-42, Fig. 1. Upon receiving the PPAI request from the wireless device, the payment processing network generates a PPAI associated with the primary account identifier. *Id*., 12:51-56. The payment processing network then stores the PPAI and sends the PPAI back to the device through the communications network for use in subsequent financial transactions. *Id*., 12:56-60.

78. Communication of the PPAI request and generated PPAI between the device and the payment processing network takes place over long-range communication through a wireless access point 118, the access point providing access to a communications network 116, through which the device may communicate with the payment processing network 110. *Id.*, 14:60-65, Fig. 1.

Carlson further describes that the communications network 116 may be a cellular telephone network. *Id.*, 5:60-62, 10:2-6.

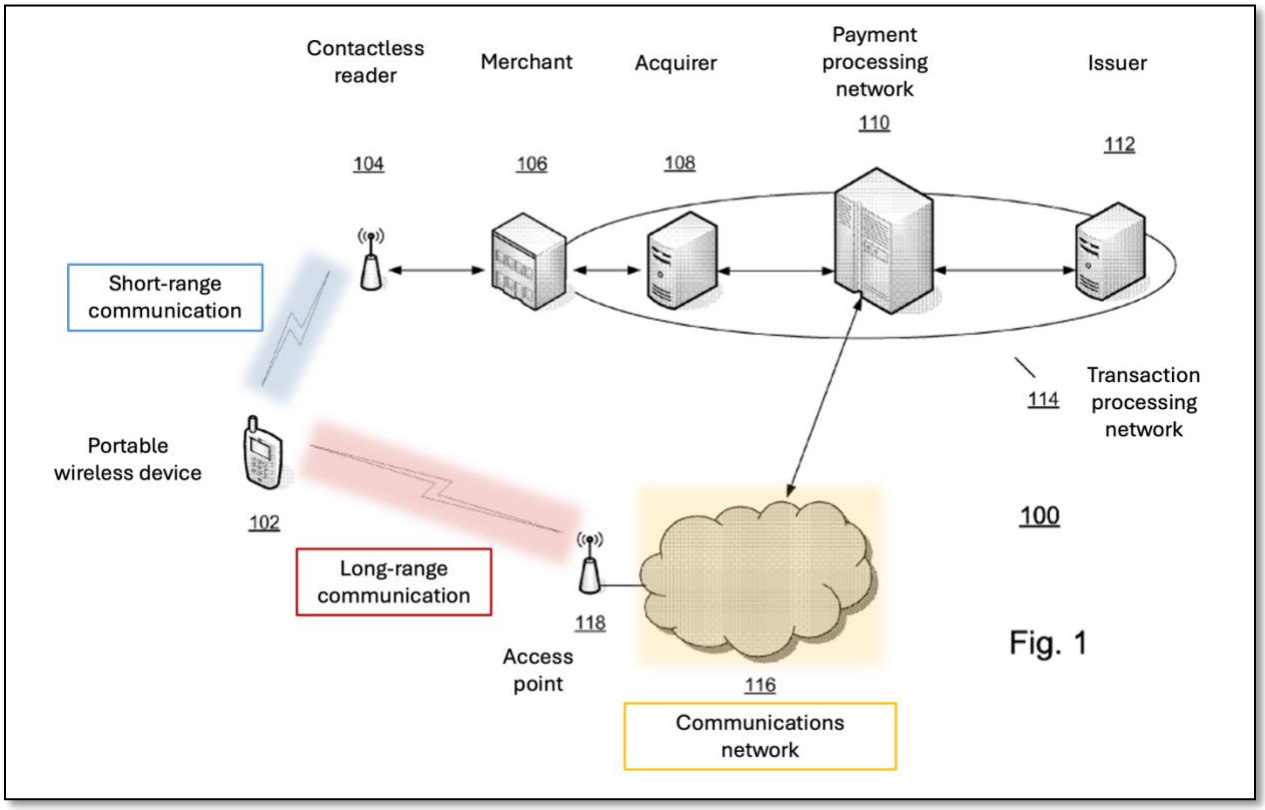

Id., Fig. 1 (annotated).

79. Once the PPAI has been received at the device, the user may conduct a financial transaction by holding the device "in the vicinity 222 of the contactless reader 204." *Id.*, 12:56-60, 13:10-13, Figs. 1-2. Using short-range communications, the PPAI may be transmitted to the contactless reader 104 (204 in Fig. 2) and to the merchant 106 for conducting the financial transaction. *Id.*, 13:13-17, 17:7-15, Fig. 1. More specifically, the contactless element of the wireless device allows for "transferring and receiving data using a near field communications ("NFC")

capability (or near field communications medium) typically in accordance with a standardized protocol or data transfer mechanism (e.g., ISO 14443/NFC)." *Id.*, 17:3-7. The PPAI is subsequently communicated to the payment processing network where it is converted to the primary account number (PAN) and sent to the issuer (e.g., bank). *Id.*, 13:28-33. The issuer then processes the transaction to determine if it should be allowed or denied. *Id.*, 13:33-36, Fig. 2. If the transaction is approved, funds are transferred from the account held at the issuer to the merchant. *Id.*, 14:43-46.

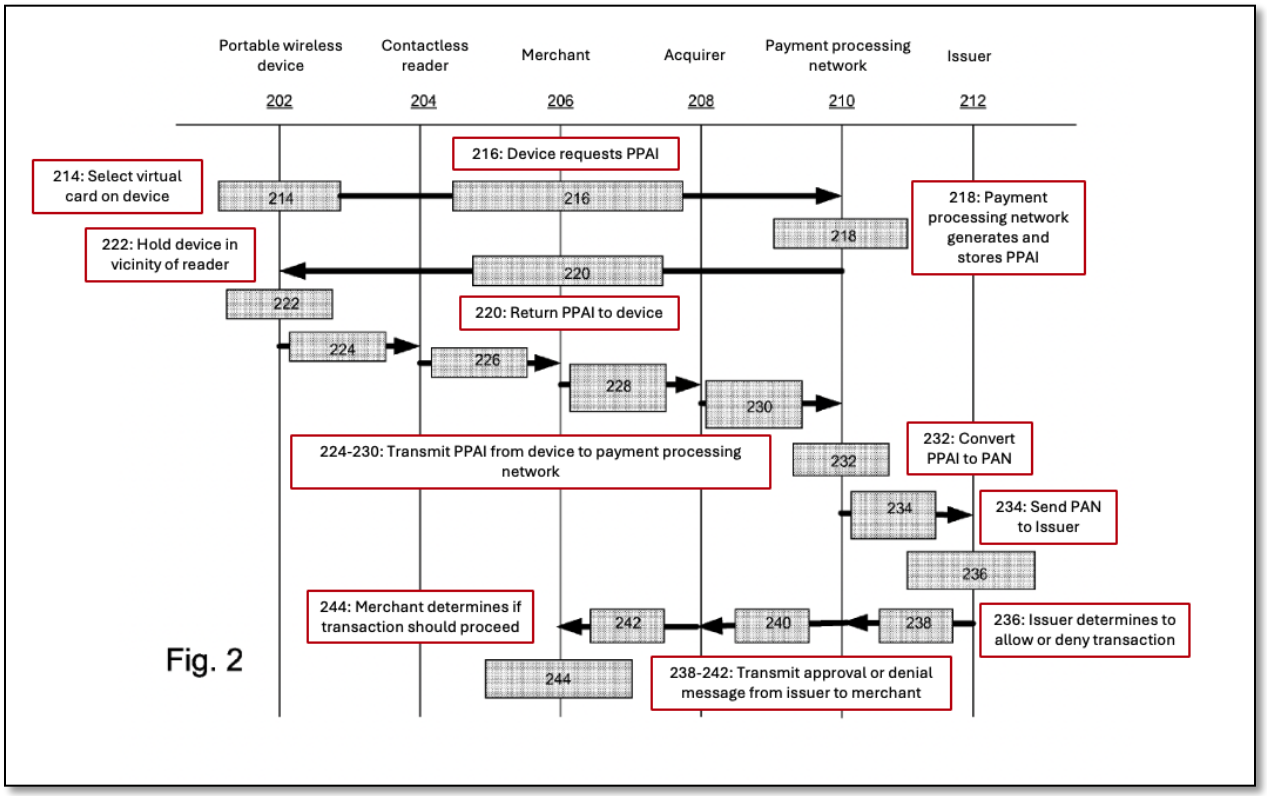

Id., Fig. 2 (annotated).

B. Overview of *Holloway*

80. I have been informed that International Patent Publ. No. WO 02/49322 to Holloway et al. ("*Holloway*") (Ex. 1032) was filed December 11, 2001, published June 20, 2002, and is prior art to the '432 Patent under at least 35 U.S.C. § 102(a), (b), and (e) (pre-AIA). I have also been informed that *Holloway* was neither cited nor considered during the prosecution of the '432 Patent.

81. *Holloway* describes a mobile communication unit "with which a large variety of transactions can be undertaken." *Holloway*, 1, 3-4. The mobile communications unit includes "means for telephone communication connected to means for checking the identity of a user of the unit, so that the result of such a check can be incorporated in a telephone communication." *Id*. 2:3-5. The identity of a user is preferably checked with a fingerprint scanner integrated in the device. *Id*., 2:10-11, 4:5-7. "A fingerprint scanner 15 is also connected to the central processor 11 and is physically mounted at the foot of the keypad 13." *Id*., 4:23-24.

82. The user's identity is verified "[i]n order to operate the telephone," and "[i]n order to log on to [a] bank account," and "[t]o complete [a] transaction[.]" *Id*., 6:4-6, 6:13-17. For example, once the owner of a device is verified via fingerprint, "the mobile telephone is enabled and the user is permitted access to the full range of features. One of these features is the ability of the mobile telephone to function as an RFID smart card" allowing the user to "perform all conventional credit and debit card transactions." *Id*., 9:5-11.

C. Overview of *Jazayeri*

83. I have been informed that U.S. Patent Publ. No. 2008/0155268 to Jazayeri et al. ("*Jazayeri*") (Ex. 1007) was filed December 20, 2006, published June 26, 2008, and is prior art to the '432 Patent under at least 35 U.S.C. § 102(a) and (e) (pre-AIA). I have also been informed that *Jazayeri* was neither cited nor considered during the prosecution of the '432 Patent.

84. *Jazayeri* describes a system for controlling access to secure data or applications on a mobile device via biometric verification. *Jazayeri*, [0005], [0007], [0031] (the mobile device may be a "Personal Digital Assistant (PDA), a cellular phone, a hand held computing device, or any other similar wireless computing device"). The biometric data may be utilized to control access to user account information stored on the mobile device when conducting a wireless transaction. *Id.*, [0007], [0050]. The biometric data used may be fingerprint data collected from a user via a fingerprint reader integrated with the mobile device. *Id.*, [0029].

85. To initiate the transaction, the user selects a payment application on a mobile device and selects an account (e.g., credit or debit account) to use for the purchase. *Id*., [0049]. To verify the user's identity and access account information, the fingerprint reader is used to obtain fingerprint data from the user, which is "converted into match points and then translated into a numeric value which is compared against existing biometric templates stored in the non-volatile memory."

Id., [0050]. If the biometric data does not match, the user is "denied access to the secure assets stored in the non-volatile memory." *Id*., [0048]. If the fingerprint data matches the template, the user is authenticated and has "some amount of time (perhaps 5-10 seconds) to place the mobile device within the range of a transaction terminal before reauthorization is required." *Id*., [0051]. If the user places the mobile device "within the range of a transaction terminal within the allotted time period, the terminal verifies the device and the transaction is complete." *Id*., [0052]. At step 714, the user may then receive a digital receipt on the mobile device via Near-Field Communication (NFC) or may "utilize short message system (SMS) to view transaction details." *Id*., [0052].

D. Overview of *ISO-14443*

86. I have been informed that ISO/IEC 14443 ("*ISO-14443*") (Ex. 1016) was voted on and approved by ISO and IEC national bodies in April 2000, and is prior art to the '432 Patent under at least 35 U.S.C. § 102(a) and (b) (pre-AIA). I have also been informed that *ISO-14443* was neither cited nor considered during the prosecution of the '432 Patent.

87. *ISO-14443*[2] "is one of a series of International Standards describing the parameters for identification cards" for use in "international interchange." *ISO-14443*, 4. *ISO-14443* is a four-part standard. Part 1 specifies "the physical characteristics of proximity cards" ("PICC"). *Id.*, 5. Part 2 specifies "the characteristics of the fields to be provided for power and bi-directional communication between proximity coupled devices (PCDs) and [] (PICCs)." *Id.*, 16. Part 3 specifies polling, byte format, initialization requests, and anticollision methods. *Id.*, 36. Finally, Part 4 specifies "a half-duplex block transmission protocol" and "defines the activation and deactivation sequence of the protocol." *Id.*, 94.

E. Overview of *Lin*

88. I have been informed that U.S. Patent No. 10,380,573 to Lin et al. ("*Lin*") (Ex. 1030) was filed September 30, 2008, and is prior art to the '432 Patent under at least 35 U.S.C. § 102(e) (pre-AIA). I have also been informed that *Lin* was neither cited nor considered during the prosecution of the '432 Patent.

---

[2] As discussed herein, *ISO-14443* is a four-part standard. A POSITA would have understood the four-part standard is intended to operate as a single standard. Thus, when looking to *ISO-14443*, a POSITA would have looked to the standard as a whole, including all four parts. Therefore, the four parts of *ISO-14443* are combined into a single exhibit for purpose of this proceeding.

89. *Lin* teaches a method for conducting peer-to-peer financial transactions between handheld electronic devices. *Lin*, Abstract, 2:8-26, 7:51-53. *Lin* teaches the electronic device may be a "cellular phone" such as "a model of an iPhone®[.]" *Id.,* 8:20-38. The electronic devices are configured to store a user's information regarding financial accounts, such as credit card, bank, or non-cash accounts. *Id.,* 15:36-16:2. The financial transactions may be conducted by two or more parties using Near-Field Communication (NFC). *Id.,* 10:64-11:12, 32:36-54.

90. As illustrated in Figs. 5A-5B*, Lin* describes a method for adding a new credit card account to the electronic device to be used in a future transaction. *Id.,* 21:36-48. Specifically, *Lin* teaches a user selecting the Transaction application icon 34 and then selecting the "Add" icon 130 to add a new credit card account. *Id.*, 22:33-46. The user inputs the required credit card information into the various fields in screen 146 and selects icon 168 to begin the verification process. *Id.,* 23:27-24:8. *Lin* teaches that the verification process "serve[s] the purpose of verifying that the user performing the steps of entering the credit card account into the device 10 is either the credit card account holder or an authorized user." *Id.*, 24:9-10. During verification, credit card account information entered in screen 146 is "transmitted to the corresponding credit card provider." *Id.*, 24:24-25. *Lin* teaches "the transmission of the credit card information may be accomplished through one or more of the [disclosed] communication interfaces," including a Wide Area Network ("WAN"),

Wireless Local Area Network ("WLAN"), or Local Area Network ("LAN"), and "be protected by one or more of the [disclosed] encryption and security methods," including SSL and TSL. *Id*. 24:14-19. 20:6-12, 20:3.

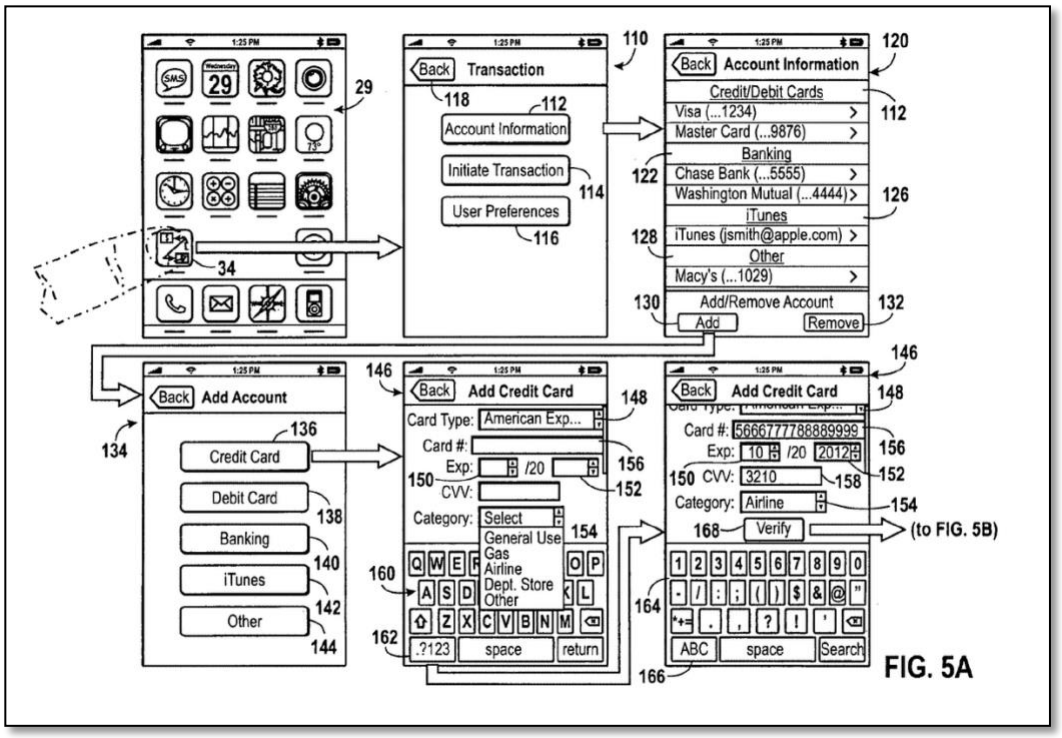

Id., Fig. 5A.

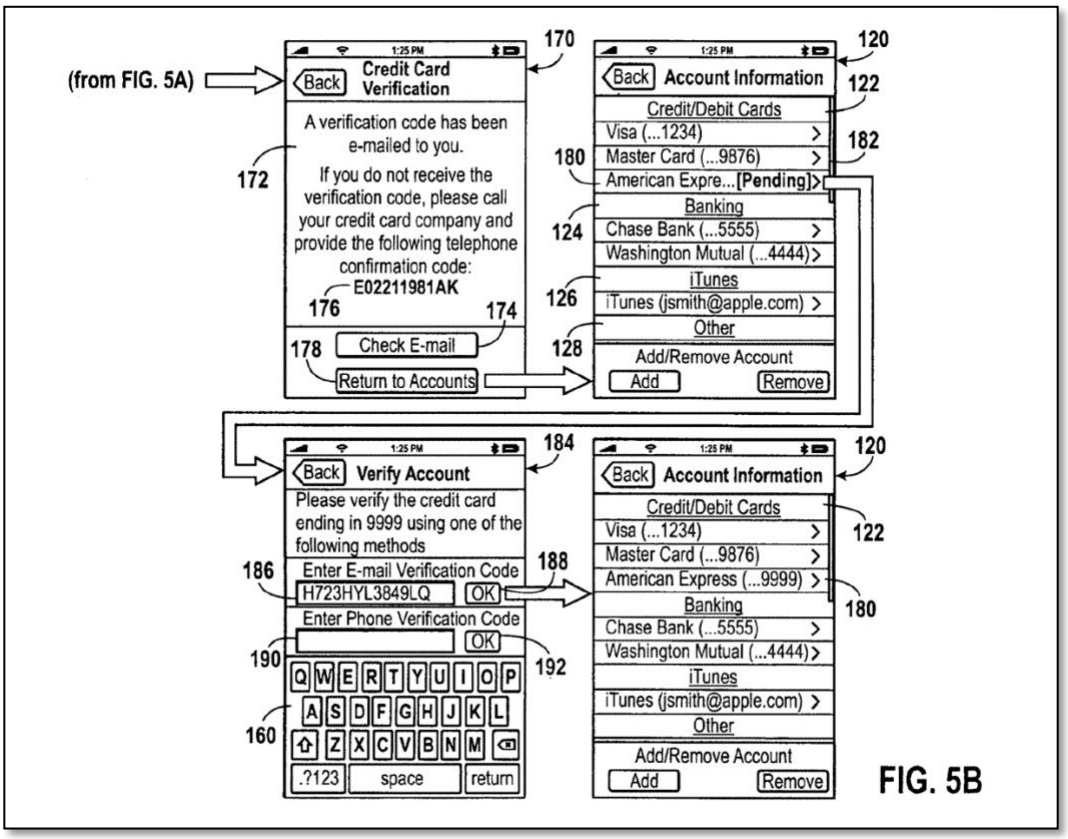

FIG. 5B

Id., Fig. 5B.

91. As illustrated in Fig. 5B, the user verification process continues when an email has been sent with a verification code. After the user provides the correct verification code to the Transaction application, "the newly entered credit card account 180 will be authorized and ready for use in conjunction with the Transaction application 34." *Id*. 24:64-66. The "[p]ending" status of the credit card is then removed, indicating the credit card is authenticated and ready to use for future transactions. *Id.,* Fig. 5B.

92. *Lin* also teaches a system and method for performing a group transaction wherein one initiating device receives payments from one or more payors from the group. *Lin,* 71:22-37. Once the initiator device has conducted a financial transaction directly with the vendor (e.g., a restaurant) on behalf of the group, the initiator device may engage in secondary transactions to obtain payment from the other members of the group. *Id*., 71:60-25, 71:25-28. *Lin* teaches that "[o]nce the group invoice 1180 has been apportioned by the initiator on the initiator device 10, the amounts owed by each of the [other payors], may be communicated to these parties as a partial invoice." *Id.,* 72:52-56, Fig. 28. Subsequently, "a payment account may be selected on the NFC payor device 92 and, thereafter, be transmitted to the initiator device 10" and the payment may be processed. *Id.,* 72:64-73:20.

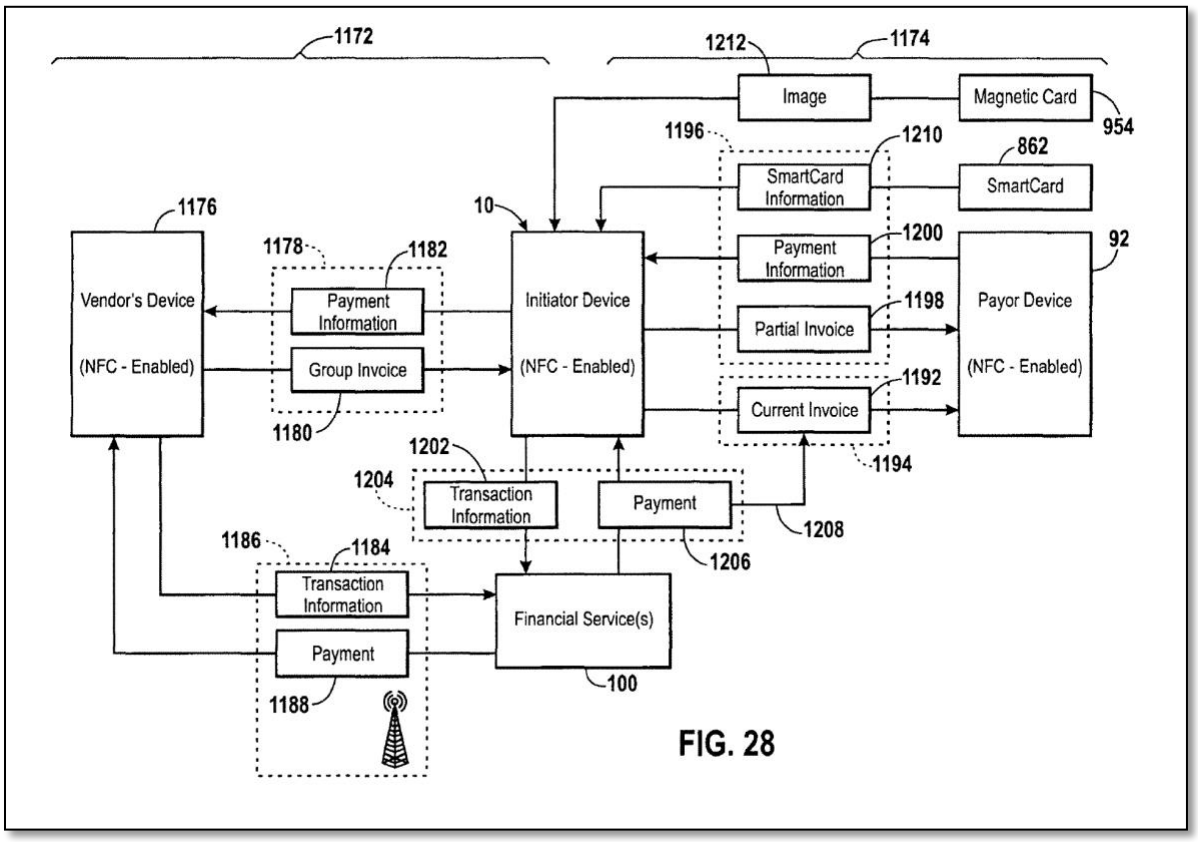

Id., Fig. 28.

F. Overview of *Sherman*

93. I have been informed that U.S. Patent Publ. No. 2007/0232358 to Sherman ("*Sherman*") (Ex. 1014) was filed April 2, 2007, and published October 4, 2007, and is prior art to the '432 Patent under at least 35 U.S.C. § 102(a), (b), and (e) (pre-AIA). I have also been informed that *Sherman* was neither cited nor considered during the prosecution of the '432 Patent.

94. *Sherman* describes a method and apparatus for implementing WiMAX transceivers into a mobile terminal for cellular communication. *Sherman,* Abstract.

The mobile terminal may be a cellular phone or personal digital assistant (PDA). *Id.,* [0021]. Specifically, *Sherman* teaches a cellular phone capable of both Bluetooth and WiMAX communication. *Id.,* Abstract. The communication network may include multiple cellular phones, a Bluetooth headset, and WiMAX base station. *Id.,* [0015], Fig. 1.

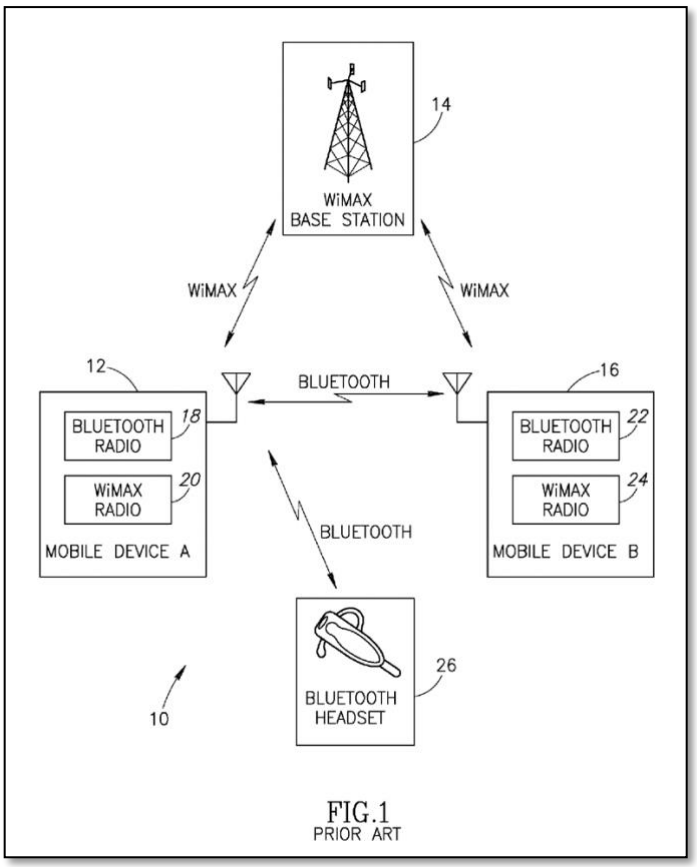

Id., Fig. 1. *Sherman* teaches a cellular phone that includes a processor, RF transceiver, memory, keypad, display, Bluetooth interface, WiMAX interface, and Bluetooth/WiMAX coexistence block. *Id,* [0053]-[0054], Fig. 2. The

Bluetooth/WiMAX coexistence block is operative to "synchronize the time base of the Bluetooth transceiver to WiMAX frames[.]" *Id.* [0028].

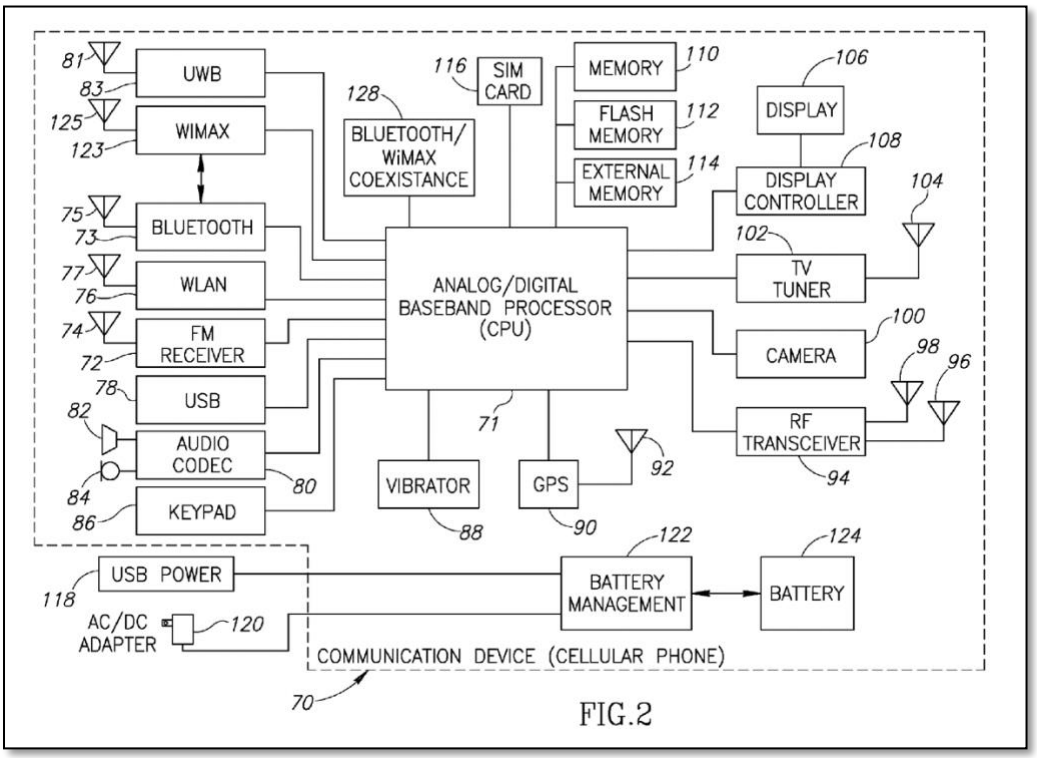

Id., Fig. 2

G. Overview of *Murakami*

95. I have been informed that International Patent Publ. No. WO 01/95246 to Murakami et al. ("*Murakami*") (Ex. 1009) was filed June 7, 2001, published December 13, 2001, and is prior art to the '432 Patent under at least 35 U.S.C. § 102(a) and (b) (pre-AIA). I have also been informed that *Murakami* was neither cited nor considered during the prosecution of the '432 Patent.

96. *Murakami* describes a method and apparatus for using physiological biometric parameters to activate a device, participate in a transaction, or identify a user. *Murakami*, 1:8-13. The biometric parameters may be represented by a "composite waveform reflecting anatomical structure and physiological processes, such as blood flow, heart rate, blood pressure, and surrounding bone and blood vessel structure." *Id.*, 19:9-12. Features of the measured waveforms may be compared to stored waveforms, and based on their similarities, the system may "grant or deny access to a device or [provide] authorization for transaction." *Id.*, 16:35-17:3.

97. As illustrated in Figs. 1-2, *Murakami*'s device may be a mobile phone with a biometric authentication button or switch 26 for enabling the device and a chip 30 for receiving and processing the biometric identifier. *Id.*, 20:18-20, 21:14-16.

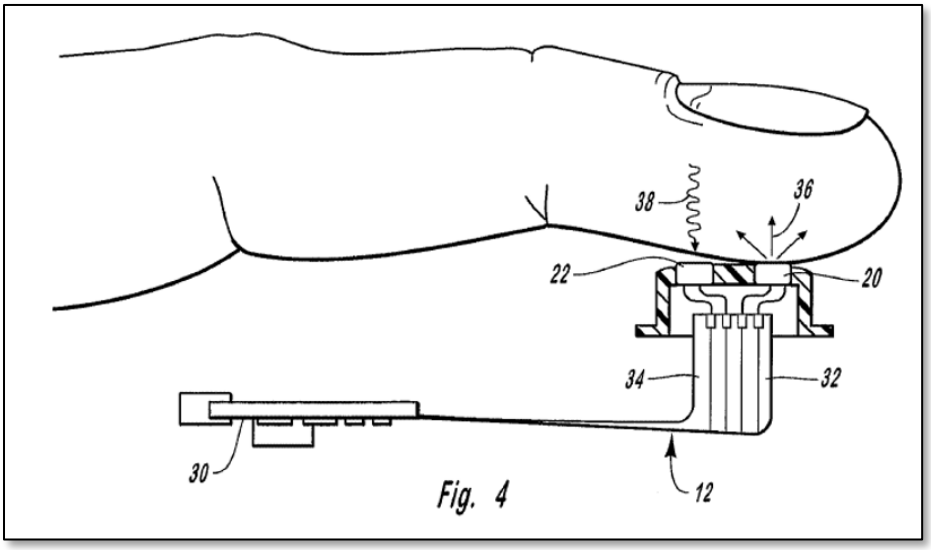

Fig. 4

Id., Fig. 4.

VIII. SUMMARY OF UNPATENTABILITY

98. I have reproduced the Proposed Grounds of Unpatentability from the Petition for ease of reference:

Proposed Ground of Unpatentability	**Exhibits**
Ground 1: Claims 1-3, 5-6, and 10-15 are obvious under pre-AIA 35 U.S.C. § 103 over *Carlson* in view of *Holloway* and *ISO-14443.*	Ex. 1005 Ex. 1032 Ex. 1016
Ground 2: Claims 7-8 and 16-17 are obvious under pre-AIA 35 U.S.C. § 103 over *Carlson* in view of *Holloway, ISO-14443* and *Lin.*	Ex. 1005 Ex. 1032 Ex. 1016 Ex. 1030
Ground 3: Claim 9 is obvious under pre-AIA 35 U.S.C. § 103 over *Carlson* in view of *Holloway, ISO-14443* and *Sherman.*	Ex. 1005 Ex. 1032 Ex. 1016 Ex. 1014
Ground 4: Claims 2-4 and 11-13 are obvious under pre-AIA 35 U.S.C. § 103 over *Carlson* in view of *Holloway, ISO-14443* and *Jazayeri.*	Ex. 1005 Ex. 1032 Ex. 1016 Ex. 1007
Ground 5: Claims 1-3, 5-6, and 10-15 are obvious under pre-AIA 35 U.S.C. § 103 over *Carlson* in view of *Murakami* and *ISO-14443.*	Ex. 1005 Ex. 1009 Ex. 1016
Ground 6: Claims 7-8 and 16-17 are obvious under pre-AIA 35 U.S.C. § 103 over *Carlson* in view of *Murakami, ISO-14443,* and *Lin.*	Ex. 1005 Ex. 1009 Ex. 1016 Ex. 1030
Ground 7: Claim 9 is obvious under pre-AIA 35 U.S.C. § 103 over *Carlson* in view of *Murakami, ISO-14443* and *Sherman.*	Ex. 1005 Ex. 1009 Ex. 1016 Ex. 1014
Ground 8: Claims 2-4 and 11-13 are obvious under pre-AIA 35 U.S.C. § 103 over *Carlson* in view of *Murakami, ISO-14443* and *Jazayeri.*	Ex. 1005 Ex. 1009 Ex. 1016 Ex. 1007

IX. OPINIONS REGARDING GROUND 1: CLAIMS 1-3, 5-6, AND 10-15 ARE OBVIOUS OVER *CARLSON* IN VIEW OF *HOLLOWAY* AND *ISO-14443*

99. *Carlson* teaches a wireless device for conducting financial transactions with a point-of-sale (POS) terminal. *Carlson* acknowledges that a user may unlock the device to perform a financial transaction via fingerprint authentication but does not elaborate on the hardware necessary to do so. Ground 1 relies on *Holloway's* detailed description of fingerprint sensing, establishing that a POSITA would have been motivated to implement *Carlson* pursuant to *Holloway's* fingerprint sensor. *Carlson* also teaches that its device may use standardized NFC protocols, expressly recommending ISO 14443, but does not describe the low-level details of ISO 14443. Ground 1 relies on *ISO-14443* for those details, establishing that a POSITA would have been motivated to implement *Carlson* pursuant to this standardized protocol.

A. Claim 1

i. [1(Pre)] A method of operating a smartphone in performing a plurality of financial transactions, the method comprising:

100. To the extent the preamble is limiting, *Carlson* teaches Claim 1(Pre). *Carlson* discloses "a ***method*** of processing a transaction[.]" *Carlson*, 14:4-5, Fig. 4. *Carlson* further discloses an exemplary system coextensive with the method of <u>*performing a plurality of financial transactions*</u>. *See*, *e.g., id.,* 5:21-23, 3:32-34

(contemplating "***one or more transactions***"), Fig. 1; *also infra* Claim 1(b). The flow diagram of Figure 4 is "in accordance with an embodiment of the present invention." *Id.*, 14:5-6. The Figure 4 discussion outlines a method for a user to make a financial transaction using the system disclosed by *Carlson*. *Id.*, 14:4-46. *Carlson* Figure 1 discloses a "transaction processing system," including at least a "portable wireless device," a "contactless reader," "a merchant," "a transaction processing network," and "a wireless access point." *Id.*, 9:52-57, Fig. 1. The method of obtaining and using a PPAI to make a financial transaction is implemented on the system shown in Figure 1. The transaction processing system of Figure 1 is the only system disclosed by *Carlson*, therefore a POSITA would have understood the Figure 1 system to be coextensive with the method of processing a transaction as discussed in relation to Figure 4.

101. *Carlson* teaches a portable wireless device (e.g., "a mobile cellular phone") with advanced functionality, such that a POSITA would have understood *Carlson's* device to be a *smartphone*. *Carlson* discloses "the portable wireless device 102…may include cellular telephones, Personal Digital Assistants (PDA), pagers and the like." *Carlson*, 9:59-64. *See also, Id.*, 5:21-27. Furthermore, *Carlson* discloses that "[c]ellular telephones, [PDAs], pagers…are being used to perform a wide variety of tasks, such as standard voice communications, e-mail access, internet web surfing, and a whole host of other activities." *Id.*, 1:21-28. The portable wireless

device of Carlson includes "a processor [] for processing the functions of the portable consumer device [,] a display[,] input elements[,] a speaker[,] a microphone[, and] an antenna." *Id.*, 17:16-27. A POSITA would have understood that the term "smartphone" came to prominence with the emergence of mobile phones with advanced functionality. A POSITA would have understood that "smartphone" is a colloquial term for a mobile phone capable of performing operations in addition to standard voice calls. As stated, *Carlson* is capable of performing advanced functionality such as e-mail access, internet surfing, and the focus of the disclosure, financial transactions. Because *Carlson's* mobile cellular phone comprises advanced functionality, such as making a payment, a POSITA would have understood it to be a "smartphone."

ii. [1(a)] responsive to at least one physiological parameter having been sensed by at least one sensor of the smartphone, enabling a mode to communicate by the smartphone information requesting an authorization;

102. *Carlson* in view of *Holloway* teaches Claim 1(a). As discussed above, I have been asked to interpret <u>*physiological parameter*</u> to include static biometric identification features such as fingerprint or facial geometry. *See* Section III.C.i.

1. Responsive to at Least One Physiological Parameter Having Been Sensed by at Least One Sensor of the Smartphone

103. *Carlson-Holloway* teaches sensing a physiological parameter in the form of a fingerprint prior to authenticate a user before conducting a financial transaction.

a. *Carlson's* Teachings

104. *Carlson* discloses enabling a device (e.g., wireless device) to perform a financial transaction by first unlocking the device. *Carlson*, 6:6-11. *Carlson* explains that "biometric information (e.g. ***fingerprint***)" of a user may be used to unlock the device to facilitate the transaction. *Id.,* 12:13-24. The biometric information is *at least one physiological parameter*.

b. *Holloway's* Teachings

105. *Holloway* teaches a mobile communications unit "for checking the identity of a user of the unit[.]" *Holloway,* 2:2-5. The identity of a user "is preferably checked biometrically, such as by voice recognition and/or ***by fingerprint scanning means***." *Id*. 2:10-11. *Holloway's* identity check is performed using a mobile telephone that comprises "[a] fingerprint scanner 15. . . connected to the central processor 11 and is physically mounted at the foot of the keypad[.]" *Id*., 4:21-24.

106. *Holloway* further teaches that the user's fingerprint must be authenticated before operating the phone and/or before performing a financial transaction. *Id*., 6:4-6, 6:13-17. "Having established [the] correct identity, the mobile telephone is enabled and the user is permitted to access the full range of features."

Id. 9:7-8. For example, unlocking the phone includes the ability to "function as an RFID smart card" and "perform all conventional credit and debit card transactions." *Id*., 9:7-11. During a financial transaction, the owner's identity must be verified by using the fingerprint scanner both to initiate the transaction, and to complete the transaction. *Id*., 6:13-17.

c. ***Carlson*** **Modified Pursuant to** ***Holloway***

107. *Carlson-Holloway* teaches *responsive to at least one physiological parameter having been sensed by at least one sensor of the smartphone*. As discussed above, *Carlson* discloses "biometric information (e.g. **fingerprint**)" may be used to unlock a device, including a wireless device. *Carlson*, 12:13-24. *Holloway* discloses details on a fingerprint scanner physically integrated into a mobile telephone, details that are omitted by *Carlson*.

108. A POSITA would have been motivated to implement *Holloway's* fingerprint scanner in *Carlson's* device. First, *Carlson* explicitly contemplates unlocking the device with a fingerprint before a user can proceed with a financial transaction but does not describe the necessary components to do so. *Carlson* acknowledges that unlocking a device with a fingerprint is a "form of well known device access security," but fails to provide a description of the hardware components necessary for wireless device-based fingerprint authentication. *See Carlson*, 12:13-24. *Holloway* describes the specific hardware, using a fingerprint

scanner integrated into a mobile device, for achieving the very type of biometric authentication contemplated by *Carlson*. *Holloway*, 2:10-11, 4:5-7, 4:23-24. A POSITA would have been motivated to modify *Carlson* in light of *Holloway's* fingerprint authentication teachings to realize the benefits *Holloway* expressly teaches—increased security in a low-cost module that is "compact, well proven and accepted by the general public." *Id*., 3:29-4:7 (further teaching that a biometric method (e.g., fingerprint), is preferred "since it provides a higher level of security than a PIN"); 9:17-19 ("The manufacturing cost of incorporating the fingerprint reader and RFID smart card functionality is low in relation to the overall cost of the telephone. In particular, fingerprint readers are already manufactured in high volume so that their cost is acceptable."). A POSITA would have understood that a fingerprint is unique to each individual and would have been harder to mimic than that of an ordinary PIN, therefore offering higher security. *See supra* ¶49 (discussing that fingerprints are unique). *Carlson*'s financial transactions involve access to sensitive information. A POSITA would have understood that strict security protocols, including the necessary fingerprint authentication hardware, were important to secure data on wireless devices, such as the financial transactions of *Carlson*. A POSITA would have recognized that the proposed combination would improve *Carlson's* system in the same way *Holloway's* similar system benefits from more robust security realized by the biometric authentication process, utilizing a

relatively low-cost, compact and convenient sensor integrated into the mobile phone. Both *Carlson* and *Holloway* describe using wireless devices for financial transactions and accessing sensitive information. *See supra* ¶¶75-79 (discussing *Carlson*'s disclosure of cellular telephone/PDA performing *Carlson*'s disclosed financial transaction) and ¶¶81-82 (discussing *Holloway's* mobile device implementing biometric authentication prior to transactions).

109. A POSITA would have further had a reasonable expectation of success in implementing *Holloway's* fingerprint sensor in *Carlson's* device because, as expressly taught in *Holloway*, "fingerprint readers [were] already manufactured in high volume so that their cost [was] acceptable. In addition, they [were] compact, well proven and already generally accepted." *Holloway*, 9:17-20. *Carlson* expressly contemplates fingerprint-based authentication. Additionally, *Carlson* and *Holloway* both describe similar wireless devices. For example, *Carlson* discloses a wireless device which may include "any such device that contains a wireless communication element" including "cellular telephones, Personal Digital Assistants (PDA), pagers and the like." *Carlson*, 9:59-64. *Holloway* similarly discloses "a mobile telephone" comprising a "fingerprint scanner 15 […] connected to the central processor 11 [that] is physically mounted at the foot of the keypad 13." *Holloway,* 4:21-28. Thus, a POSITA would have expected that implementing a commonplace fingerprint reader,

produced at high volumes and accepted by the general public, would successfully secure the financial transactions being executed on *Carlson*'s wireless device.

2. Enabling a Mode to Communicate by the Smartphone Information Requesting an Authorization

110. *Carlson-Holloway* teaches that once a user has been verified via biometric information, the wireless device is unlocked, and a user is allowed to proceed with a financial transaction. *Carlson*, 12:18-24. While the device is unlocked, the user selects which virtual card they would like to use to conduct a financial transaction and "the portable wireless device 202 may then ***request a pseudo primary account identifier [("PPAI")]***[3] that corresponds with a primary account identifier from the payment processing network" and allows the device to complete a purchase. *Id.,* 12:34-37. Upon receiving the request for the PPAI from the wireless device, the payment processing network generates a PPAI, and returns the PPAI to the wireless device to complete that particular transaction or a particular limited set of transactions. *Id*., 12:51-59. More specifically, *Carlson* teaches that a remote, or "back-end," server computer (*first device*) at the payment processing network generates and sends the PPAI before completing that particular transaction

[3] *Carlson* uses "pseudo primary account identifier" and "pseudo primary account number" interchangeably. For consistency, Petitioner uses "PPAI" any time Carlson is referring to the pseudo primary account number/identifier.

or a particular limited set of transactions. *Id*., 3:6-8, 15:56-60. "Once the portable wireless device has received the [PPAI] the transaction may continue." *Id*., 13:10-11, 12:59:61.

111. The device and the payment processing network communicate (e.g., the device sending a PPAI request and receiving a PPAI in response) over long-range communication using communications network 116. *Id*., 14:60-65. *Carlson* teaches establishing a wireless link with a remote server at the payment processing network to request a PPAI, wherein the wireless link is established by communicating "with the cellular network 116 through the use of one or more wireless access points 118." *Id.,* 10:7-10., Fig. 1. The access points "may be wireless base stations that provide coverage to large geographic areas[.]" *Id.,* 10:10-11. *Carlson* further discloses that the wireless device contains a "***long range wireless communications element 504***" to transmit and receive communications between the wireless device and access point 118 to communicate with the payment processing network 110. *Id.,* 14:60-65.

112. Because the financial transaction requires requesting and receiving the PPAI before the process may proceed for that particular transaction or a particular limited set of transactions, the PPAI is <u>*information requesting an authorization*</u> to perform that particular transaction or a particular limited set of transactions in *Carlson's* system. *See infra* Claim 1(d) (detailing transaction process that depends on receiving PPAI). *Carlson* teaches that once the wireless device receives the PPAI

"that is associated with a primary account identifier and has been enabled for use, the user may then proceed to use the portable wireless device to conduct a transaction." *Carlson*, 7:43-47. *Carlson's* Fig. 4 demonstrates at step 406 (green), the system confirms receipt of the PPAI before moving forward with the financial transaction.

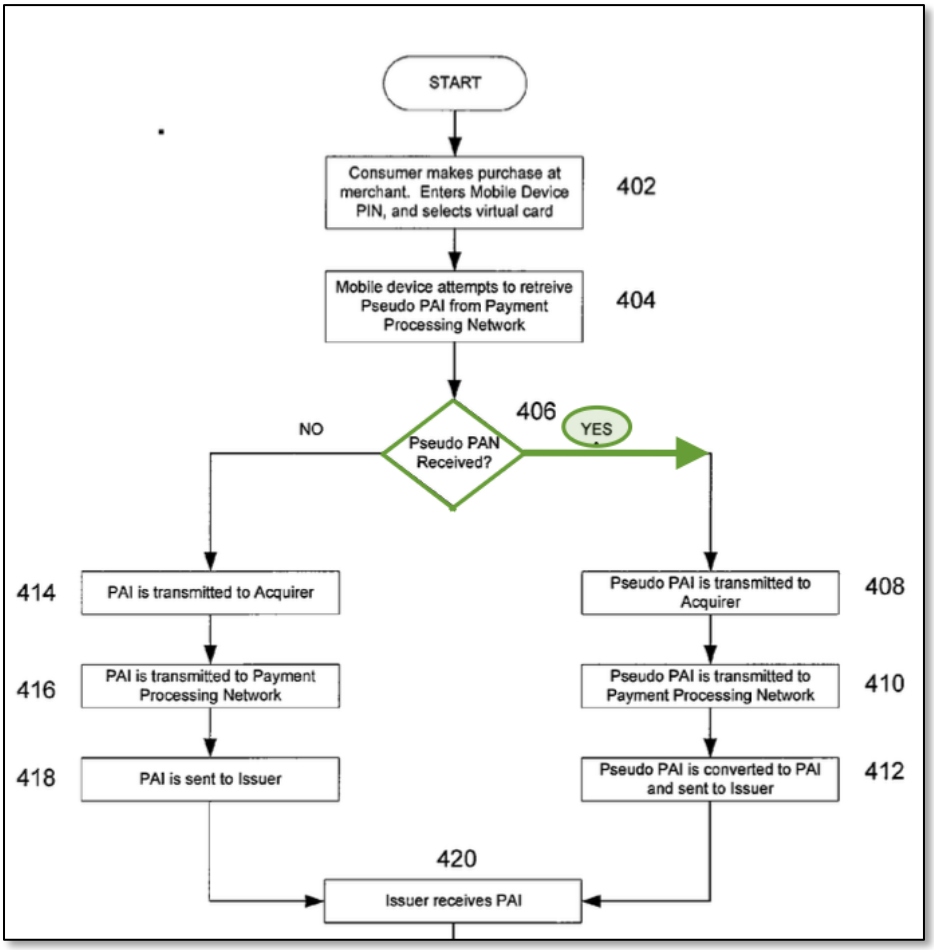

Id., Fig. 4 (excerpted and annotated). If the wireless device confirms receipt of the PPAI at step 406, the process continues through steps 408, 410, and 412, using the PPAI for the financial transaction. *Id.*, 14:15-17; *see also supra* Claim 1(d). In

contrast, "[i]f the portable wireless device fails to retrieve a [PPAI] at step 406 the process continues on to step 414 where the transaction proceeds using the primary account identifier" instead of the PPAI.[4] *Carlson*, 14:24-27. Thus, *Carlson-Holloway* teaches *requesting an authorization*, in the form of a PPAI request, to establish the capability to perform a financial transaction. Further, because selecting the virtual card after unlocking the phone via biometric authentication enables the wireless device (*smartphone*) to communicate the PPAI request *(information requesting authorization*) to the payment processing network via long-range communication, *Carlson-Holloway* teaches *enabling a mode to communicate by the smartphone information requesting an authorization*.

iii. [1(b)] while the mode is enabled, transmitting by the smartphone first data to a first device, the first data relating to a plurality of financial transactions to be conducted;

113. *Carlson-Holloway* teaches that while the wireless device is unlocked and the long-range communications link is established (*mode is enabled*), the

[4] The proposed grounds rely on the PPAI-based financial transaction. Accordingly, when *Carlson's* system determines that ***no*** PPAI was received, in the context of the proposed grounds, it serves as an indication that the function to conduct the PPAI-based financial transaction has ***not*** been established. While it may still be possible in *Carlson's* system to conduct a different financial transaction (e.g., a less secure process that uses a PAN, rather than PPAI), the function relied upon in the Proposed Grounds is not established absent a PPAI.

wireless device sends a request for a PPAI (*first data relating to a plurality of financial transactions to be conducted*) to the remote server computer at the payment processing network (*first device*). *See supra* Claim 1(a). *Carlson* teaches that the PPAI may be used "to conduct ***one or more transactions***." The wireless device requests and receives the PPAI from the remote server computer at the payment processing network wherein the PPAI "may be set to expire after a certain number of transactions[.]" *Carlson*, 6:56-65. Because the PPAI may be used by the wireless device to conduct multiple transactions prior to its expiration, a POSITA would have understood that the request for PPAI (*first data*) relates to *a plurality of financial transactions to be conducted*. Indeed, a POSITA would have understood that the wireless device may use a single PPAI to conduct a plurality of separate transactions.

iv. [1(c)] receiving by the smartphone second data from the first device responsive to said transmitting by the smartphone the first data, the second data relating to the plurality of financial transactions to be conducted and differing from the first data;

114. *Carlson-Holloway* teaches Claim 1(c). Responsive to the request for a PPAI (*first data*), being sent to the remote server computer at the payment processing network (*first device*), the generated PPAI (*second data relating to the plurality of financial transactions*), is sent back to and *[received] by the smartphone*. *See supra,* Claims 1(a)-(b); *Carlson*, 12:51-59. The generated PPAI is different from the first

data because the second data is the generated PPAI while the first data is the *request* for the PPAI.

v. [1(d)] performing a first transaction of the plurality of financial transactions by:

115. *Carlson-Holloway* teaches Claim 1(d). *Carlson* teaches that once the PPAI has been received at the device, the user may conduct, or perform, a plurality of financial transactions. *Carlson*, 12:56-60, 13:10-12, Figs. 1-2. As discussed in Claim 1(b), *Carlson* teaches that a single PPAI may be used to conduct multiple transactions. *See supra* ¶113. Therefore, a POSITA would have understood that the PPAI may be used to conduct a first transaction prior to its use in conducting additional, subsequent transactions. A POSITA would have understood that, in conducting multiple transactions with a single PPAI, as *Carlson* expressly teaches, the first transaction after receiving the PPAI is *a first transaction of the plurality of financial transactions*, as claimed.

vi. [1(d)(i)] detecting by the smartphone that a proximity condition is satisfied between the smartphone and a first entity, wherein the first entity is distinct from the first device;

116. *Carlson-Holloway-ISO-14443* teaches that once the wireless device has been placed in the vicinity of the contactless reader, NFC is employed to facilitate a financial transaction. *Carlson-Holloway-ISO-14443* teaches detecting that a

proximity condition is satisfied by the wireless device detecting a short-range signal from the contactless reader.

1. *Carlson's* Teachings

117. *Carlson* teaches conducting a financial transaction by transmitting the PPAI to the contactless reader over short-range communications upon being held in the vicinity of the contactless reader. *Carlson*, 13:10-18.

118. *Carlson* teaches that the contactless reader is located "at a merchant site" and "can be part of an access device" such as a "point-of-sale (POS) terminal[.]" *Id.,* 7:59-67. Additionally, the contactless reader 104 includes communication hardware to receive primary and pseudo primary account identifiers from the portable wireless device. *Id*., 10:37-42. Thus, a POSITA would have understood *Carlson's* contactless reader is part of an access device (e.g., POS terminal) located at the merchant site based on *Carlson's* express teachings. A POSITA would have further understood the access device and reader are an entity representing the merchant's location, consistent with the '432 Patent's teachings. The '432 Patent describes an entity broadly as "a person, an animal, a vehicle . . . a building . . . a product . . . a store . . . a check-out counter in a store . . . one or more locations in time and/or space, a geographic area and/or a multi-dimensional region in time and/or space." '432 Patent, 3:47-55. The '432 Patent further explains that a device can be associated with an entity by being attached to and/or installed in or on an entity, "(i.e., a device that

is associated with the entity)." *Id*., 3:33-37, 3:61-63. Below, I have provided an annotated version of *Carlson*'s Figure 1, based on both *Carlson*'s discussion of the access device and contactless reader, as well as key terminology from the '432 Patent:

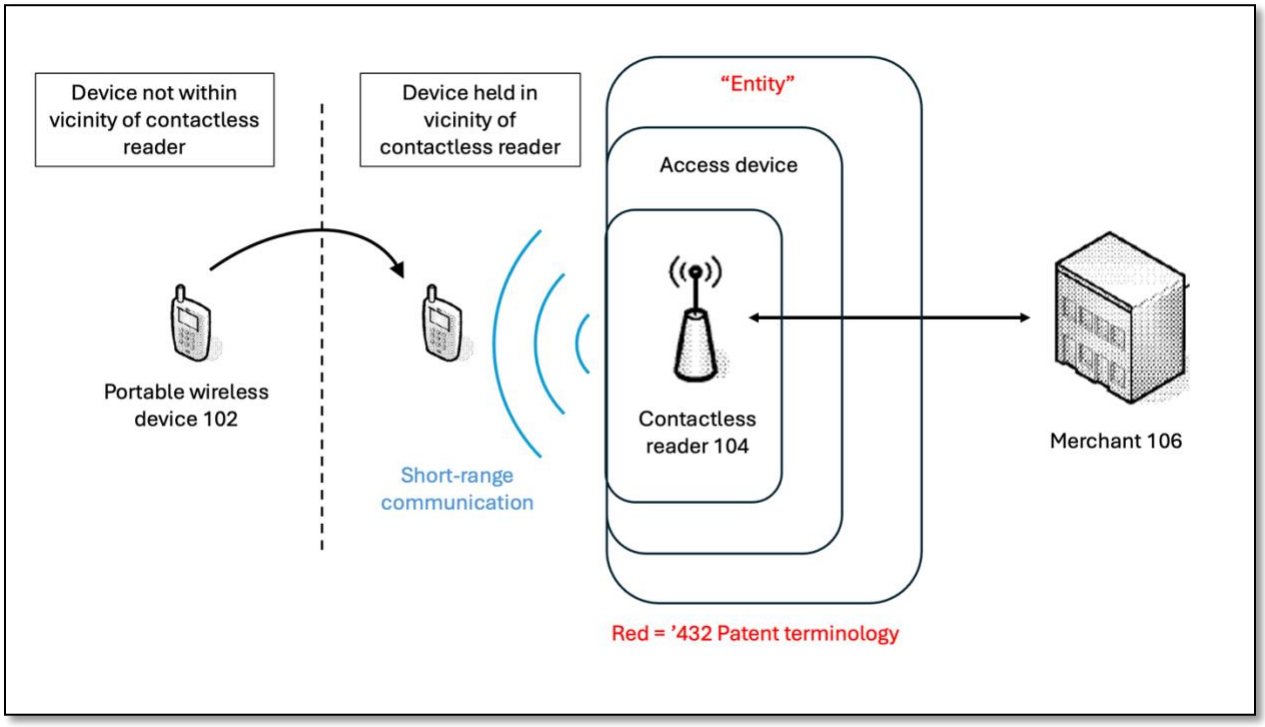

Carlson, Fig. 1 (annotated). This figure compares the disclosure of *Carlson* with the plain language of Claim 1 of the '432 Patent.

119. The contactless reader (*first entity*) is *distinct from the first device* (remote server computer at the payment processing network). *Carlson,* Fig. 1. *Carlson* teaches that the PPAI is generated by a remote server computer at the payment processing network (*first device*). *Id.,* 3:3:6-8; *see supra* Claim 1(a). *Carlson* teaches the remote server computer is "typically a powerful computer or

cluster of computers" such as a "large mainframe, a minicomputer cluster, or a group of servers functioning as a unit." *Carlson,* 11:9-13. *Carlson* discloses messages being serially communicated from the contactless reader through the merchant, acquirer, and payment processing network. *Id.*, 11:65-12:12. *Carlson* further discloses communications being serially communicated from the wireless device through the access point, communications network, and payment processing network. *Id.*, 14:60-15:5. A POSITA would have understood that the remote server computer at the payment processing network is remote from both the wireless device (*smartphone*) and the contactless reader (*first entity*).

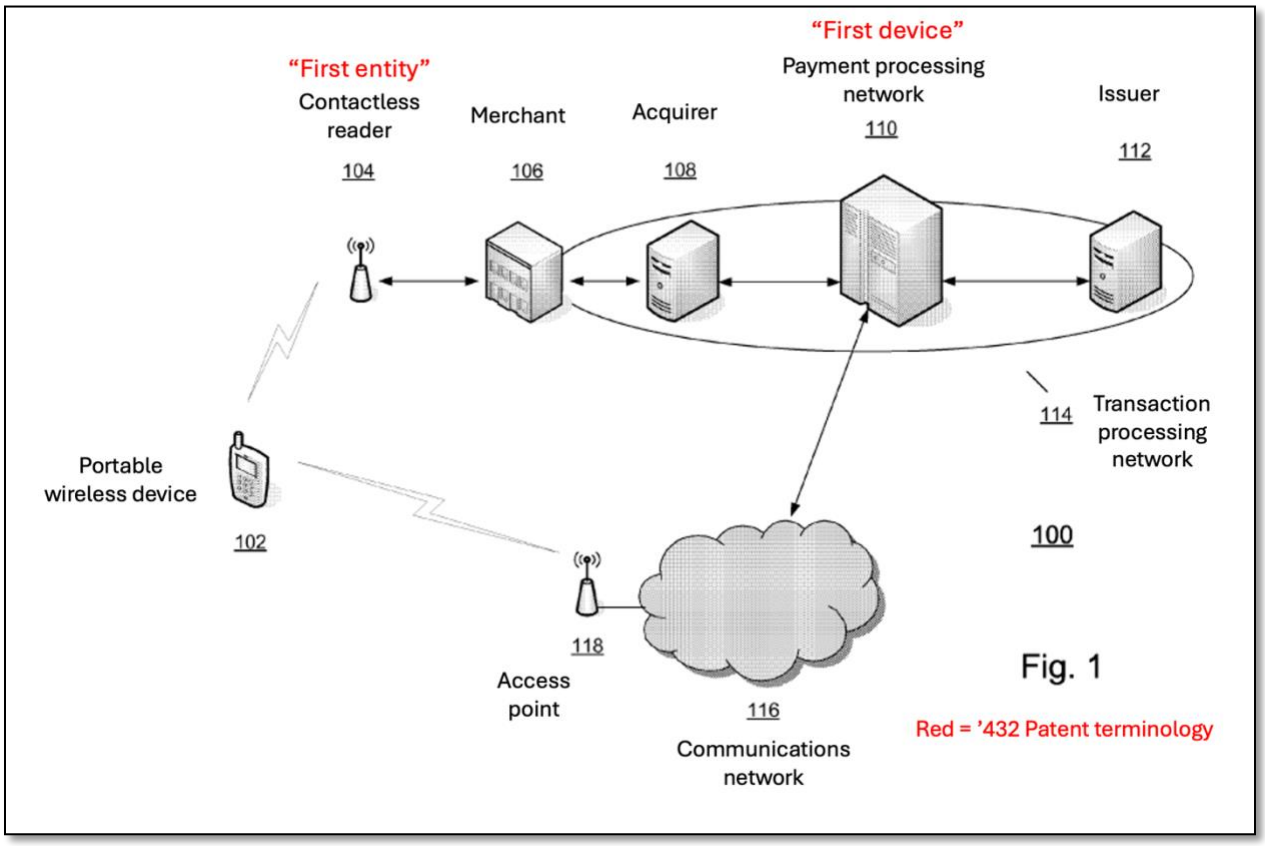

Id., Fig.1 (annotated).

120. *Carlson* describes a wireless device that contains a short-range communications element in the form of a "contactless element." *Id.*, 16:24-17:2. This contactless element permits "transferring and receiving data ***using a near field communications ("NFC") capability*** (or near field communications medium) typically in accordance with a standardized protocol or data transfer mechanism (e.g., ISO 14443/NFC)." *Id.*, 17:3-8 (explaining that "[n]ear field communications capability is a short-range communications capability"). So, *Carlson's* portable wireless device "is capable of communicating and transferring data and/or control instructions via both cellular network and ***near field communications capability***." *Id.*, 17:7-15.

2. *ISO-14443's* Teachings

121. As defined in *ISO-14443*, "[t]he frequency fc of the RF operating field shall be 13,56 MHz[.]" *ISO-14443*, 18. *ISO-14443* specifies a minimum and maximum operating field, H_{min} and H_{max}, of 1.5 A/m and 7.5 A/m, respectively. *Id.*

122. In general, *ISO-14443* discloses the following consecutive operations of the initial dialogue between PCD (e.g., POS terminal) and PICC (e.g., smartcard or smartcard-equipped device): 1) "activation of the PICC by the RF operating field of the PCD;" 2) "the PICC shall wait silently for a command from the PCD;" 3)

"transmission of a command by the PCD;" 4) "transmission of a response by the PICC." *Id*.

123. More specifically, *ISO-14443* specifies a PICC shall exit its POWER-OFF State and enter its IDLE state when it "is in an energizing magnetic field[5] greater than H_{min}[.]" *Id.*, 46. In the IDLE State, "the PICC is powered" and it listens for and recognizes commands from the PCD. *Id*. In other words, the PICC is powered and actively listens for commands only if the magnetic field of the PCD remains above H_{min} (1.5 A/m). *Id*. A POSITA would have understood that magnetic field and distance are directly correlated, e.g., magnetic field strength decreases with increasing distance from the PCD. For example, *ISO-14443* devices are inductively coupled, meaning the magnetic field generated by the RFID/NFC reader device powers the circuit of the NFC tag. *RFID Handbook,* 40-42. In the near field, the magnetic field strength follows a relationship of $1/d^3$, where d is the distance from

[5] For consistency, I adopt "magnetic field." *ISO-14443* uses the terms "RF field" and "magnetic field" interchangeably in its disclosure. *Compare*, *ISO-14443*, 22 ("*H* is the (rms) value of magnetic field strength in A/m"), *Id.*, 46 ("magnetic field greater than H_{min}") with *Id.*, 18 ("RF operating field of the PCD"). The units of A/m disclosed by *ISO-14443* connote a magnetic field strength. *See, e.g., RFID Handbook* at pg. 63 ("Magnetic field strength [Variable]…*H* [Symbol]…Ampere per meter [Unit]…A/m [Abbreviation]").

the antenna. *Id.,* 114. A POSITA would have understood if the PICC is outside of the PCD's range, that is, the PCD's transmitted power has dropped below the threshold, the PICC is no longer receiving power and cannot transmit signals back to the PCD. Thus, the PICC meets a proximity condition because it is close enough to the PCD to experience a magnetic field stronger than 1.5 A/m, meaning it is within a calculable distance where the PCD's magnetic field remains above the threshold. A POSITA would have understood that the range between the PCD and the PICC can be calculated when the interrogation field strength of the PICC and the field strength curve of the PCD are known. *RFID Handbook,* 241; *see also, id.,* Equation 4.3, 61-65. Figure 9.11 of *RFID Handbook* illustrates the field strength curve of "a typical reader," where the field strength drops to the *ISO-14443* minimum (H_{min}) magnetic field strength of 1.5 A/m at a distance of approximately 10 centimeters. *Id.* Further, *RFID Handbook* illustrates other examples of magnetic field strength, each of them dropping below H_{min} at a distance of less than 1 meter. *Id.*, 64. Thus, a POSITA would have understood that the proximity condition associated with the activation of the PICC at 1.5 A/m is calculable, corresponding to approximately 10 centimeters for a typical reader and less than 1 meter for other reader antenna designs.

3. ***Carlson*** **Modified Pursuant to** ***ISO-14443***

124. *Carlson-Holloway* further modified by *ISO-14443* to conduct short-range NFC communications between the wireless device and the access device

teaches the claimed *detecting by the smartphone that a proximity condition is satisfied between the smartphone and a first entity* wherein the entity comprises the contactless reader and access device located at the merchant's location. *Carlson* contemplates using NFC as the short-range communications medium interfacing the wireless device and the contactless reader to perform a transaction. *Carlson*, 17:3-7. *Carlson* acknowledges NFC is "typically in accordance with a standardized protocol or data transfer mechanism (e.g., ISO 14443/NFC)." *Id*. *ISO-14443,* referenced in *Carlson*, includes disclosure on the signal interface, initialization and anticollision protocols, and data transmission protocol. *See supra,* ¶87 (discussing the four parts of *ISO-14443*). Specifically, as discussed in further detail below, *ISO-14443* requires that a proximity condition is satisfied to establish a communications link between a PICC and a PCD.

125. A POSITA would have understood that the teachings of *ISO-14443* would apply to common near-field communications, like those described by *Carlson*. As discussed above, *Carlson* acknowledges that NFC is "typically in accordance" with, for example, *ISO-14443*. *Carlson,* 17:3-7. Indeed, a POSITA would have understood that, as of 2008 (the priority date of *Carlson*), NFC was standardized by a variety of organizations, including ISO, ECMA, and ETSI. *See supra,* ¶70. A POSITA would have further understood that NFC was compatible with *ISO-14443*, meaning NFC-enabled devices, such as those disclosed by *Carlson*,

would be compatible with *ISO-14443*. *Id. ISO-14443* discloses important interface and protocol schemes for short-range communications and specifies initialization schemes for establishing communications between a PCD and a PICC device. *See supra,* ¶¶122-123. For example, *ISO-14443* discloses predicate magnetic field strength conditions for PICC devices. *See supra,* ¶¶121-122 (discussing the four steps to initialize communications between the PICC and PCD).

126. A POSITA would have understood that the proximity condition between a PICC and a PCD is a prerequisite to subsequent communication between the devices, as the standard specifies that the PICC is only powered and only listens for commands if the magnetic field of the PCD remains above H_{min} (1.5 A/m). *ISO-14443*, 46. In the proposed combination, *Carlson's* contactless reader is implemented as the PCD (pursuant to *ISO-14443'*s teachings) and *Carlson's* wireless device is configured to communicate via NFC as the PICC (pursuant to *ISO-14443'*s teachings). Thus, when bringing the wireless device "in the vicinity of the contactless reader," the magnetic field generated by the contactless reader activates the PICC (placing it in the IDLE state) only upon exceeding 1.5 A/m. *Carlson,* 13:11-13; *ISO-14443,* 46. A POSITA would have understood that 1.5 A/m corresponds to a calculable distance of less than 1 meter, typically around 10 centimeters. *See supra,* ¶123.

127. *Carlson-Holloway-ISO-14443* teaches sensing that a proximity condition is met by the wireless device detecting a short-range signal from the contactless reader. Specifically, the wireless device, configured as the PICC in *ISO-14443*, is powered by the magnetic field of the PCD and enters the IDLE state. The PICC "shall recognize" commands from the PCD during initialization. *ISO-14443*, 46*; see also, id.,* 47 (describing "commands used by the PCD") and 47-55 (describing the commands). Commands are messages communicated from the PCD by modulating the magnetic field. *Id.*, 18 ("The PCD shall produce an energizing RF field […] which shall be modulated for communication."), 47 (discussing information communicated within the commands). Specifically, the PCD uses Amplitude Shift Keying modulation of the RF operating field. *Id.*, 19. A signal is "[t]he physical embodiment of a message or of information" or "[a]n electrical wave used to convey information." *Graf,* 691. Thus, a POSITA would have understood that the commands, being communicated via modulated waveforms, are signals and are transmitted by the contactless reader (configured as the PCD pursuant to *ISO-14443*) and detected by the wireless device (configured as the PICC pursuant to *ISO-14443*). A POSITA would have understood that by receiving the commands, the wireless device detects that the proximity condition is satisfied. Thus, *Carlson-Holloway-ISO-14443* teaches *detecting by the smartphone that a proximity condition is satisfied*.

128. A POSITA would have been motivated to implement *ISO-14443*'s teachings in this way for several reasons. First, *Carlson* expressly motivates the combination, teaching that "[c]ontactless element 618 is capable of [communicating] using . . . ('NFC') . . . typically in accordance with a standardized protocol or data transfer mechanism (e.g., ISO 14443/NFC)." *Carlson*, 17:3-7. From this express suggestion to implement NFC functionality "in accordance with" ISO-14443, a POSITA would have been motivated to implement *Carlson's* NFC communications pursuant to *ISO-14443*. Specifically, *Carlson* discloses that the wireless device transfers and receives data "using a near field communications ("NFC") capability [] typically in accordance with a standardized protocol [] (e.g., ISO 14443/NFC)"). *Id.,* 17:3-15. Therefore, a POSITA would have understood that *Carlson* contemplates *ISO-14443* as a protocol for the short-range communications disclosed. However, *Carlson* does not describe how this functionality is implemented, as the surrounding disclosure is silent on the important details of initializing an NFC communication per the *ISO-14443* standard. *ISO-14443* explicitly teaches how short-range communication using NFC is initialized between wireless communication devices like *Carlson's*. NFC was standardized by a variety of organizations since at least 2002, where the NFC standards specified a compliance with *ISO-14443*. *Griffin*, 2:3-36. Therefore, a POSITA would have understood that short-range communications based on *ISO-14443* was well-known and a POSITA

would have been motivated to use *ISO-14443* to guide implementing NFC short-range communications in *Carlson's* system for communication between the wireless device and contactless reader.

129. Additionally, a POSITA would have been motivated to look to *ISO-14443*'s teachings when implementing NFC capability to communicate the PPAI from the wireless device for improved security and efficiency. *ISO-14443* expressly limits the maximum magnetic field strength emitted by a PCD device to 7.5 A/m. *ISO-14443,* 18. Therefore, devices abiding by *ISO-14443* standard can only form a connection within a limited, specified distance. As such, *ISO-14443* makes NFC less susceptible to interference than other forms of short-range communications. A POSITA would have understood that, especially when transferring critical financial information, limiting the risk of interference from a malicious eavesdropper would have benefited *Carlson's* system. Limiting the communications distance is critical when transferring financial information, as an eavesdropper would need to be within the short, 0-20 cm communication distance to intercept the short-range communications. *SC Alliance 2003*, 18-19 (discussing *ISO-14443's* short communication distance reducing unintended communications). A POSITA would have understood this security to have benefited *Carlson's* system, especially because *Carlson* contemplates transactions at merchants (e.g. grocery stores), which are often crowded and therefore more prone to malicious attacks. Indeed, *Carlson*

acknowledges the importance of preventing eavesdropping and emphasizes the value of its invention as an additional safeguard against eavesdropping within the context of contactless readers. *Carlson*, 1:62-2:18. Additionally, short-range communications using NFC as defined in *ISO-14443* do not require a formal pairing process that other short-range communications like Bluetooth would require but instead permits transmission of information immediately upon satisfying the proximity condition, therefore creating more efficient information transfer. *See supra,* ¶68 (discussing benefits of NFC, including a quick transaction time). Lastly, short-range communications using NFC, as defined by *ISO-14443*, operate with lower power consumption because the PCD, upon becoming close enough to the PICC, activates the PICC, absolving the need for additional battery or resource consumption on the phone during transmission. This allows mobile phones, for example, to perform contactless transactions even if the phone's battery is nearly depleted and in power-saving mode. *See supra,* ¶68 (discussing benefits of NFC, including operation with low/no power and poor cellular coverage).

130. Finally, a POSITA would have had a reasonable expectation of success when modifying *Carlson* according to *ISO-14443'*s teachings. Detecting proximity thresholds during short-range communications using NFC was well-known prior to the '432 Patent, as evidenced by *ISO-14443*'s standardized link initialization. As discussed above, *ISO-14443* discloses detecting a threshold magnetic field strength.

ISO-14443, 46. NFC was used in mobile phones for peer-to-peer data transfers, such as sharing files, images, videos, etc. *See supra,* ¶72 (discussing peer-to-peer mode between two NFC-enabled devices). Further, the use of short-range communications using NFC in mobile payment systems specifically were well-known prior to the alleged invention, for example, in card-emulation techniques. *SC Alliance 2007,* 6-10 (discussing available mobile payments via NFC available as of 2007). Thus, a POSITA would have expected success in implementing the teachings of *ISO-14443* into the wireless device of *Carlson* to effectuate short-range communication.

vii. [1(d)(ii)] establishing, using a first air interface, a wireless short-range communications link between the smartphone and the first entity, in response to the proximity condition having been satisfied between the smartphone and the first entity;

131. *Carlson-Holloway-ISO-14443* teaches Claim 1(d)(ii). *Carlson* modified by *ISO-14443* conducts short-range communications between the wireless device and the access device using NFC. *See supra* Claim 1(d)(i). A POSITA would have understood that sending data between the wireless device (*smartphone*) and access device (*first entity*) through NFC (*first air interface*) occurs as the result of *establishing a wireless short-range communications link* between the devices. *See infra* Claims 1(d)(iii)-(iv); *supra* Claim 1(d)(i).

132. *ISO-14443* specifies initialization and anticollision methods "required to initialize communications between a PICC and PCD." *ISO-14443*, 36. For

example, during initialization, the PICC participates in initialization by traversing states in response to commands from the PCD. *Id.*, 44-47.

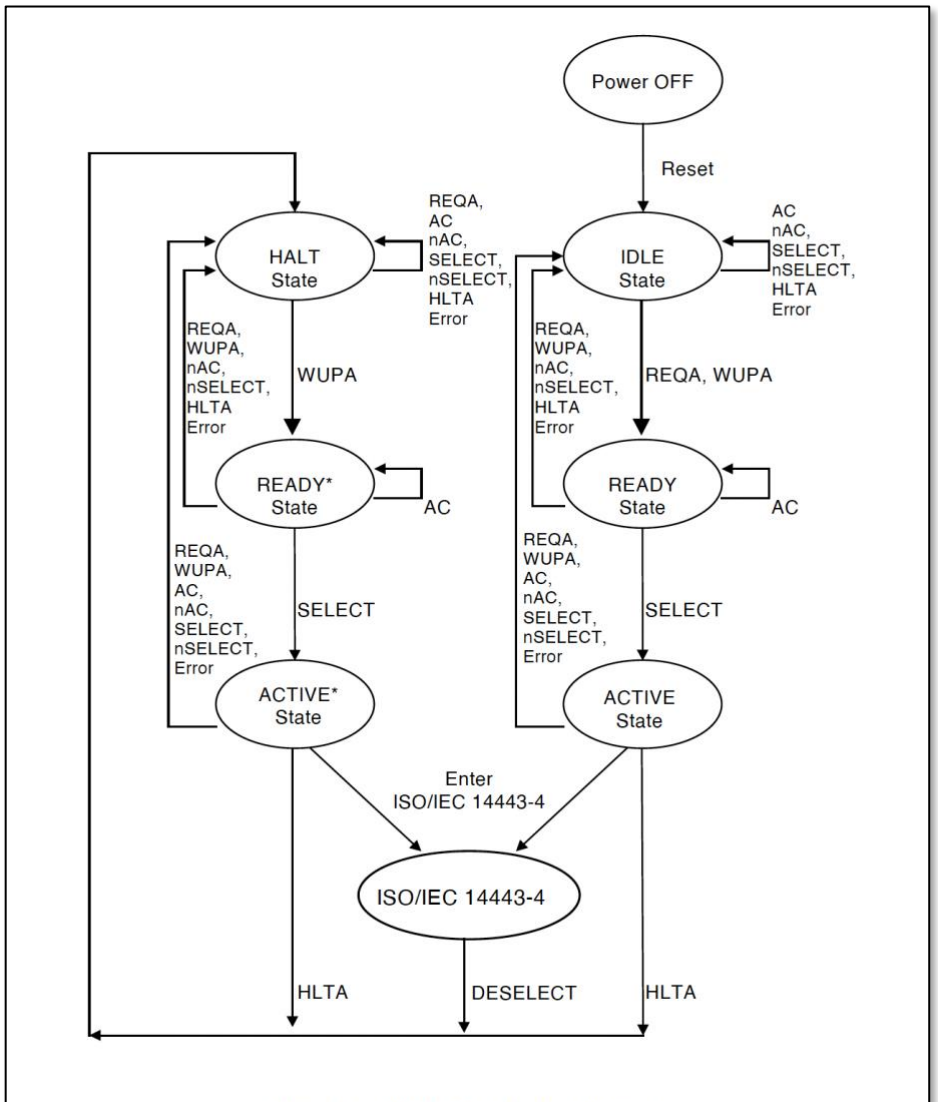

Figure 6 — PICC Type A state diagram

Id., 45 (Fig. 6). The PICC also participates in anticollision, for example, by responding to ANTICOLLISION commands (SEL and NVB) with its UID CL*n*. *Id.*, 48, 51. Successful initialization and anticollision allows data to be exchanged between the PCD and PICC (e.g., the established *wireless short-range*

communications link between the smartphone and the first entity). *Id.*, 98 (illustrating "Exchange Transparent Data"). The PICC plays an active role in successfully initializing the NFC link by responding to commands and requests transmitted by the PCD. Because the data exchange cannot take place until the PICC device has participated in successful initialization and anticollision, a POSITA would have understood the short-range wireless link to be established by the wireless device.

viii. [1(d)(iii)] receiving, using the first air interface, a short-range signal from the first entity; and

133. *Carlson-Holloway-ISO-14443* teaches establishing a wireless short-range NFC (*first air interface*) link upon satisfying a proximity condition between the wireless device and contactless reader. *See supra* Claim 1(d)(i)-(ii). *Carlson-Holloway-ISO-14443* further teaches receiving and detecting a short-range signal, using NFC (*first air interface*), from the reader (*first entity*) as part of the financial transaction. *See supra* Claim 1(d)(i) (discussing commands that are transmitted by the contactless reader and detected by the wireless device). The commands transmitted from the contactless reader to the wireless device during initialization constitute a *short-range signal* because they are transmitted according to *ISO-14443* standards. *Carlson,* 17:7-8 (teaching that NFC capability pursuant to ISO 14443 "is a short-range communications capability."). Thus, the wireless device wirelessly

[receives] a short-range signal via NFC (*first air interface*) from the contactless reader/access device (*first entity*).

ix. [1(d)(iv)] responsive to receiving the short-range signal from the first entity, sending by the smartphone to the first entity over the first air interface, information associated with the second data received from the first device; and

134. *Carlson-Holloway-ISO-14443* teaches receiving a short-range signal from the access device (*see supra* Claim 1(d)(iii)). In response to receiving the short-range signal and establishing NFC between devices, *Carlson* teaches that "the [PPAI] may be transmitted 224 to the contactless reader 204 and to the merchant 206, 226." *Carlson*, 13:15-17. A POSITA would have understood that because the PPAI was originally received (in the form of *second data*) from the remote server computer at the payment processing network (*first device*), the PPAI transmitted *by the smartphone* to the access device is *associated with the second data received from the first device.* A POSITA would have understood that because the wireless device transmits PPAI data to perform a transaction, the transmitted data references the earlier-received PPAI information. A POSITA would have understood that the PPAI data transmitted by the wireless device is *associated* with the PPAI data previously *received* by the wireless device.

x. [1(e)] independent of performing said first transaction, receiving by the smartphone a communications service from a wireless network, using a second air interface that differs from the first air interface,

135. *Carlson-Holloway-ISO-14443* teaches Claim 1(e). *Carlson* teaches that the PPAI may be received using long-range cellular communication (<u>*second air interface*</u>) through a cellular telephone network that is "***completely unrelated to transaction processing***." *Carlson*, 5:57-64. *Carlson* explains that the cellular network can be used for functions like "general voice communication. . . data communications, to enable a user to perform tasks such as surfing the internet, reading e-mail, or any other tasks that are ***associated with a general purpose data network***." *Id*., 5:65-6:3.

136. *Carlson's* wireless device contains "long range wireless communications element 504" and accesses "the communications network through the use of one or more wireless access points provided by the network." *Id*., 6:19-22., 14:60-65. More specifically, the wireless communications network may be accessed by the wireless device "through the use of a wireless network access point" such as a cellular base station. *Id*., 6:26-29, 10:9-11 (explaining that the "access points 118 may be wireless base stations that provide coverage to large geographic areas[.]"). *Carlson* further explains that after gaining access to the communications network, the wireless device can send and receive information from, for example, the remote server computer at the payment processing network via the communications network. *Id*., 6:32-55.

137. Because the communications network enables the transmission of information (e.g., the wireless device requesting a PPAI and receiving a PPAI in response), a POSITA would understand the wireless device to receive a *communications service* from the network. A POSITA would recognize that the transmission of data between the wireless device and the remote server computer via the communications network constitutes the delivery of a *communications service*, as the wireless device relies on the network infrastructure to send and receive data. Further, because the communications network enables the transmission of information "completely unrelated to transaction processing" pursuant to other functions of the device (e.g., voice communications and surfing the internet), a POSITA would also understand that receiving the communications service is *independent of performing said first transaction*. *Carlson,* 5:60-64. That is, a POSITA would recognize that wireless devices routinely access network services for a wide range of unrelated functions, such as "general voice communication . . . surfing the internet, reading e-mail[,]" and that such usage of the communications network is standard in wireless device operation and independent of the transaction. *Id.,* 5:64-6:2. Finally, a POSITA would have understood that the long-range cellular communication (*second air interface*) used to receive the communications service *differs* from the short-range wireless NFC (*first air interface*) used to communicate with the contactless reader. A POSITA would have understood that the long-range

cellular communication (*second air interface*) uses licensed frequencies while the short-range wireless NFC (*first air interface*) uses unlicensed frequencies. *See supra* ¶¶63-69. Furthermore, a POSITA would have understood that the wireless device uses long-range and short-range communication elements to communicate over the *second air interface* and *first air interface,* respectively. *Carlson,* 14:47-59, Fig. 1.

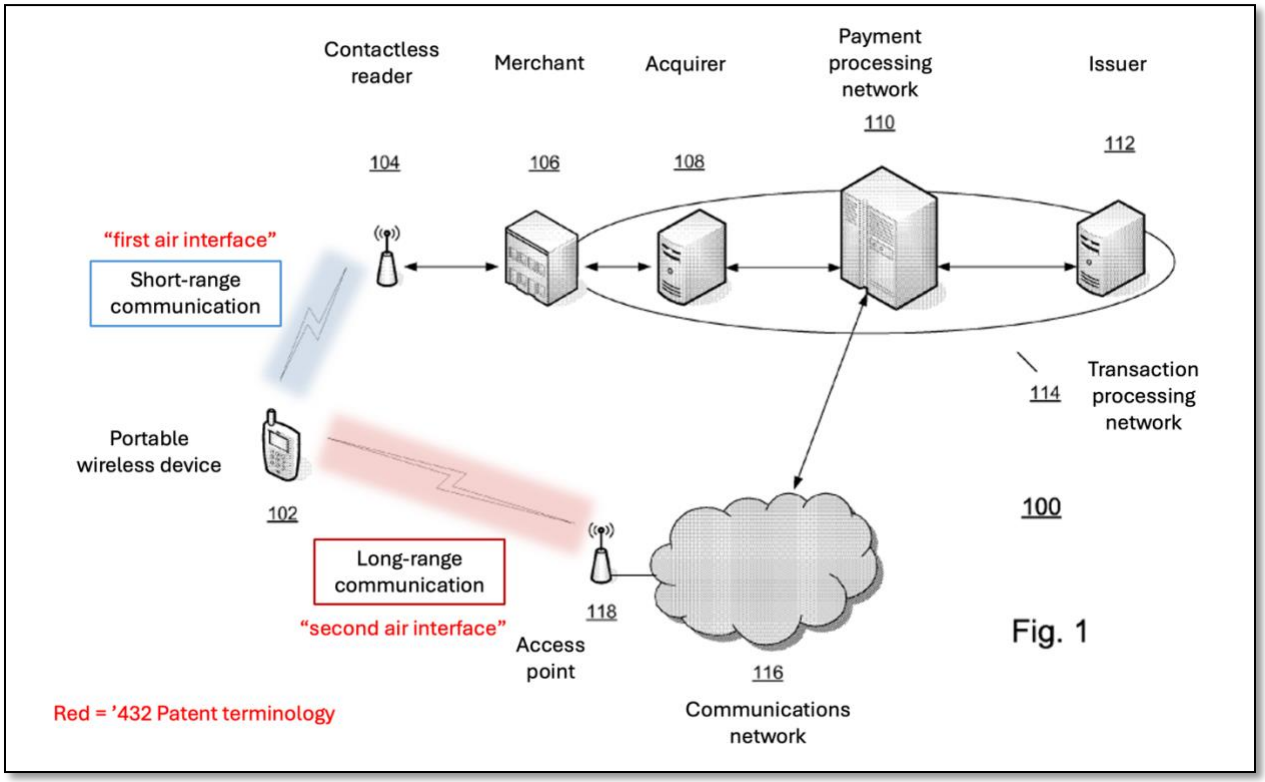

Carlson, Fig. 1 (annotated).

xi. [1(f)] wherein said transmitting by the smartphone first data and said receiving by the smartphone second data are performed over an air interface that differs from the first air interface.

138. *Carlson* teaches *transmitting[,] by the smartphone[,]* a request for a PPAI (*first data*) and *receiving[,] by the smartphone[,]* the PPAI (*second data*) from

the payment processing network via the communications network (*air interface*). *See supra* Claims 1(b)-(c), (e). A POSITA would have understood that the long-range cellular communication (*second air interface*) used to communicate between the wireless device and payment processing network *differs* from the short-range wireless NFC (*first air interface*) used to communicate between the wireless device and contactless reader. *See supra* Claim 1(e).

B. Claim 2

i. The method of claim 1, wherein establishing the wireless short-range communications link between the smartphone and the first entity is performed responsive to at least one physiological parameter having been sensed by at least one sensor of the smartphone.

139. *Carlson-Holloway-ISO-14443* teaches Claim 2. Prior to establishing the wireless short-range link, *Carlson-Holloway-ISO-14443* teaches unlocking the wireless device with a user's fingerprint (*physiological parameter*), which is sensed by a biometric *sensor of the smartphone*. *See supra* Claim 1(a). *Carlson* teaches that the wireless device is unlocked via fingerprint prior to the user selecting a virtual card they wish to use for the transaction (step 214 in Fig. 2) and establishing the short-range NFC link between the device and contactless reader (step 222 in Fig. 2). *Carlson*, 12:13-26, 13:10-18, Fig. 2. Therefore, *Carlson-Holloway-ISO-14443* teaches that the wireless short-range link is established in response to *at least one*

physiological parameter having been sensed by at least one sensor of the smartphone.

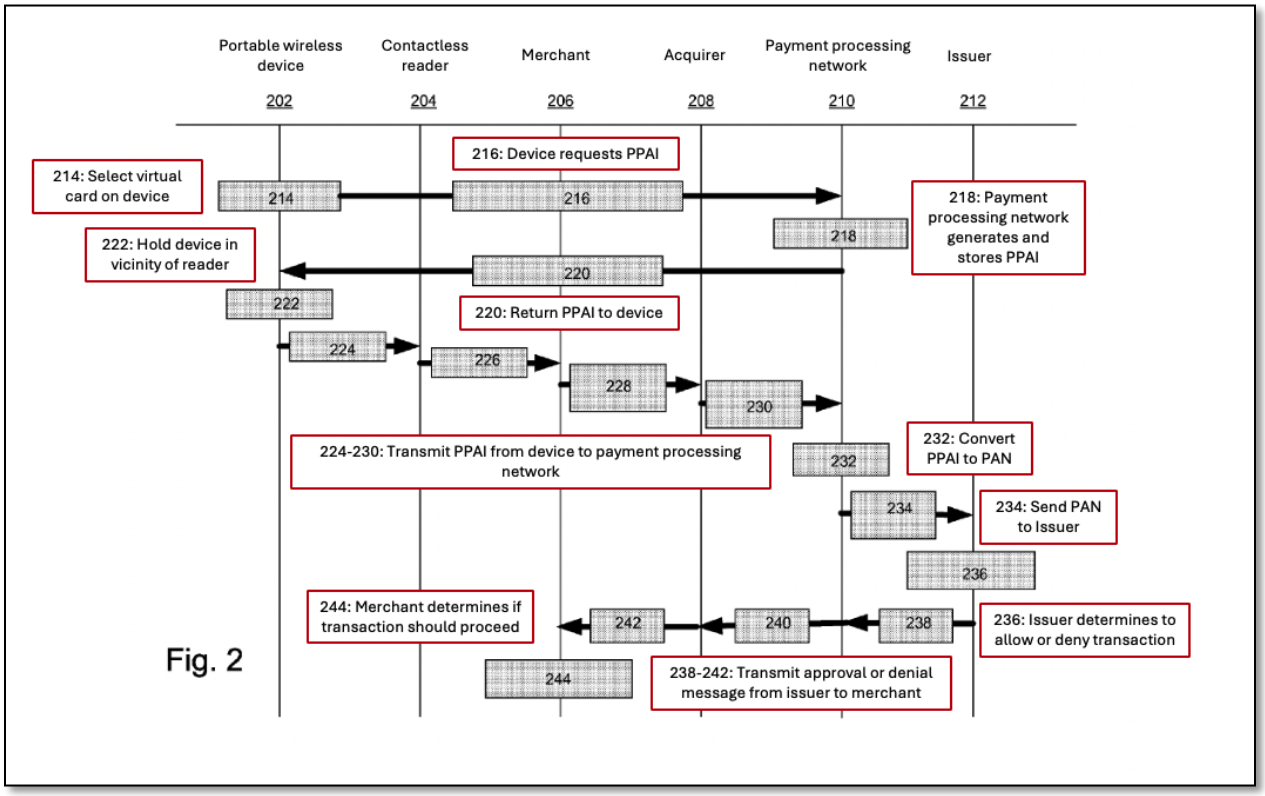

Fig. 2

Id., Fig. 2 (annotated).

C. Claim 3

i. The method of claim 1, wherein sending by the smartphone to the first entity, information associated with the second data, is performed responsive to at least one physiological parameter having been sensed by at least one sensor of the smartphone.

140. *Carlson-Holloway-ISO-14443* teaches Claim 3. *Carlson-Holloway-ISO-14443* teaches unlocking the wireless device with a user's fingerprint (*physiological parameter*) through a biometric *sensor of the smartphone* prior to

sending, by the smartphone, the PPAI (*information*) to the contactless reader/access device (*first entity*). *See supra* Claim 1(a). Because the transmission of the PPAI to the access device does not occur until the phone has been unlocked following biometric authentication, *Carlson* teaches that sending the PPAI to the access device is *performed responsive to at least one physiological parameter having been sensed by at least one sensor of the smartphone*.

D. Claim 5

i. [5(a)] The method of claim 1, wherein the method further comprises: performing a second transaction of the plurality of financial transactions by:

141. *Carlson-Holloway-ISO-14443* teaches Claim 5(a). *Carlson* teaches that the PPAI "may be set to expire after a ***certain number of transactions***[,]" indicating that a single PPAI may be used for multiple transactions. *Carlson,* 6:56-65. A POSITA would have understood that *Carlson's* method of conducting a transaction may be used for a plurality of transactions, including a second transaction, as claimed. *See supra* ¶113, ¶115; *see also supra* Claim 1(Pre).

ii. [5(b)] detecting by the smartphone that a proximity condition is satisfied between the smartphone and a second entity, wherein the second entity is distinct from the first entity and is further distinct from the first device;

142. *Carlson-Holloway-ISO-14443* teaches Claim 5(b). *Carlson* teaches that contactless readers were becoming a marketplace standard. *Carlson,* 1:42-44. *Carlson* further contemplates that multiple merchants may be connected to the

payment processing network. *Id.,* 10:47-50. A POSITA would have understood from these disclosures that *Carlson* teaches or renders obvious using the PPAI at any applicable contactless reader at any applicable merchant to conduct a mobile financial transaction, as it was well understood that interoperability with various merchant systems was a necessary feature for widespread adoption of contactless payment technologies. A POSITA would have further understood that a second transaction would be conducted with a second contactless reader/access device (*second entity*) associated with a second merchant connected to the payment processing network. A POSITA would have recognized that each merchant typically operates its own access device, and that multiple distinct merchants can interface with the same payment processing network to independently conduct transactions. Therefore, *Carlson-Holloway-ISO-14443* teaches *detecting by the smartphone that a proximity condition is satisfied between the smartphone and a second entity*. *See supra* Claim 1(d)(i) (where the *first entity* is substituted for the *second entity*). Finally, a POSITA would have understood that the contactless reader/access device is distinct from the server computer at the payment processing network (*first device*). *See supra* ¶119*; see also supra* Claim 1(d)(i).

iii. [5(c)] establishing, using the first air interface, a wireless short-range communications link between the smartphone and the second entity, in response to the proximity condition having been satisfied between the smartphone and the second entity;

143. *See supra* Claim 1(d)(ii) (where the *first entity* is substituted for the *second entity*).

iv. [5(d)] receiving, using the first air interface, a short-range signal from the second entity; and

144. *See supra* Claim 1(d)(iii) (where the *first entity* is substituted for the *second entity*).

v. [5(e)] responsive to receiving the short-range signal from the second entity, sending by the smartphone to the second entity over the first air interface, information associated with the second data received from the first device.

145. *See supra* Claim 1(d)(iv) (where the *first entity* is substituted for the *second entity*). Because the single PPAI received from the payment processing network is used for both the first and second financial transactions, the PPAI sent to the second entity is *information associated with the second data received from the first device*.

E. Claim 6

i. [6(a)] The method of claim 1, wherein said transmitting by the smartphone first data to a first device includes transmitting by the smartphone data relating to a request to pay for a transaction; and

146. *Carlson-Holloway-ISO-14443* teaches Claim 6(a). *Carlson* teaches *transmitting by the smartphone first data to a first device* in the form of a PPAI request. *See supra* Claims 1(a)-(b) (describing the PPAI request as a request for authorization to conduct a financial transaction). Because the PPAI is an

authorization to conduct a financial transaction (*see supra* Claims 1(a)-(b)), the PPAI request (*first data*) transmitted by the wireless device (*smartphone*) to the remote server at the payment processing network (*first device*) is *data relating to a request to pay for a transaction*.

ii. [6(b)] wherein said receiving by the smartphone second data from the first device includes receiving by the smartphone data relating to an acknowledgement and/or authorization of enabling a mode/function to pay for a transaction.

147. *Carlson-Holloway-ISO-14443* teaches Claim 6(b). *Carlson* teaches *receiving by the smartphone second data from the first device*. *See supra* Claims 1(a)-(c). Because the PPAI (*second data*) is received by the wireless device (*smartphone*) from the remote server at the payment processing network (*first device*) in response to the request for PPAI (*data relating to a request to pay for a transaction*), and because the financial transaction may continue after receiving the PPAI, the PPAI is *data relating to an authorization of enabling a mode/function to pay for a transaction*. *See supra* Claims 1(a)-(c) (describing requesting and receiving an authorization to establish a capability to conduct a financial transaction), 6(a).

F. Claim 10

i. [10(Pre)] A smartphone that is configured to perform operations associated with a plurality of financial transactions; the operations comprising:

148. *Carlson* teaches Claim 10(Pre). *See supra* Claim 1(Pre). A POSITA would have understood that a smartphone *configured to perform* operations is

equivalent to *operating a smartphone,* as described in Claim 1(Pre). The financial transaction process *Carlson-Holloway-ISO-14443* described in Claim 1 is an operation performed on the wireless device (*smartphone*). Claim 10 is mapped to rely on this exact financial transaction process. Therefore, the wireless device is configured to similarly perform the operations of Claim 10. Thus, a POSITA would have understood that an operation performed at the smartphone is equivalent to the smartphone performing an operation in the context of the mappings.

ii. [10(a)] responsive to at least one physiological parameter having been sensed by at least one sensor of the smartphone, enabling a mode to communicate by the smartphone information requesting an authorization;

149. *See supra* Claim 1(a).

iii. [10(b)] while the mode is enabled, transmitting first data to a first device as a precursor to performing the plurality of financial transactions; and

150. *See supra* Claim 1(b).

iv. [10(c)] receiving second data from the first device responsive to said transmitting the first data;

151. *See supra* Claim 1(c).

v. [10(d)] performing a first financial transaction of the plurality of financial transactions by:

152. *See supra* Claim 1(d).

vi. [10(d)(i)] detecting by the smartphone that a proximity condition is satisfied between the smartphone and a first entity, wherein the first entity is distinct from the first device;

153. *See supra* Claim 1(d)(i).

> ***vii. [10(d)(ii)] establishing, using a first air interface, a wireless short-range communications link between the smartphone and the first entity, in response to the proximity condition having been satisfied between the smartphone and the first entity;***

154. *See supra* Claim 1(d)(ii).

> ***viii. [10(d)(iii)] receiving, using the first air interface, a short-range signal from the first entity; and***

155. *See supra* Claim 1(d)(iii).

> ***ix. [10(d)(iv)] responsive to receiving the short-range signal from the first entity, sending to the first entity over the first air interface, information based on the second data received from the first device; and***

156. *See supra* Claim 1(d)(iv).

> ***x. [10(e)] independent of performing a transaction to pay for one or more items, receiving by the smartphone a communications service from a wireless network, using a second air interface that differs from the first air interface,***

157. *See supra* Claim 1(e).

> ***xi. [10(f)] wherein said transmitting first data and said receiving second data are performed over an air interface that differs from the first air interface.***

158. *See supra* Claim 1(f).

G. Claim 11

> ***i. The smartphone of claim 10, wherein establishing the wireless short-range communications link between the smartphone and the first entity is performed responsive to at***

least one physiological parameter having been sensed by at least one sensor of the smartphone.

159. *See supra* Claim 2.

H. Claim 12

i. The smartphone of claim 10, wherein sending by the smartphone to the first entity, information based on the second data, is performed responsive to at least one physiological parameter having been sensed by at least one sensor of the smartphone.

160. *See supra* Claim 3.

I. Claim 13

i. The smartphone of claim 10, wherein sending by the smartphone to the first entity, information based on the second data, is performed responsive to a value of at least one parameter associated with the smartphone.

161. *See supra* Claim 4.

J. Claim 14

i. [14(a)] The smartphone of claim 10, wherein the operations further comprise: performing a second financial transaction of the plurality of financial transactions by:

162. *See supra* Claim 5(a).

ii. [14(b)] detecting by the smartphone that a proximity condition is satisfied between the smartphone and a second entity; wherein the second entity is distinct from the first entity and is further distinct from the first device;

163. *See supra* Claim 5(b).

iii. [14(c)] establishing, using the first air interface, a wireless short-range communications link between the smartphone

and the second entity, in response to the proximity condition having been satisfied between the smartphone and the second entity;

164. *See supra* Claim 5(c).

iv. [14(d)] receiving, using the first air interface, a short-range signal from the second entity; and

165. *See supra* Claim 5(d).

v. [14(e)] responsive to receiving the short-range signal from the second entity, sending by the smartphone to the second entity over the first air interface; information associated with the second data received from the first device.

166. *See supra* Claim 5(e).

K. Claim 15

i. [15(a)] The smartphone of claim 10, wherein said transmitting by the smartphone first data to a first device includes transmitting by the smartphone data relating to a request to pay for a transaction; and

167. *See supra* Claim 6(a).

ii. [15(b)] wherein said receiving by the smartphone second data from the first device includes receiving by the smartphone data relating to an acknowledgement and/or authorization of enabling a mode/function to pay for a transaction.

168. *See supra* Claim 6(b).

X. OPINIONS REGARDING GROUND 2: CLAIMS 7-8 AND 16-17 ARE OBVIOUS OVER *CARLSON* IN VIEW OF *HOLLOWAY, ISO-14443* AND *LIN*

A. Claim 7

i. [7(a)] The method of claim 1, comprising: transmitting by the smartphone third data to a second device; the second device being distinct from the first device and further being distinct from the first entity; and

169. *Carlson-Holloway-ISO-14443-Lin* teaches Claim 7(a).

1. *Carlson's* Teachings

170. *Carlson* teaches a method of performing a financial transaction that begins when the user unlocks a wireless device and selects "which virtual card they wish to use to conduct the transaction." *Carlson*, 12:18-26. The virtual card "corresponds to an account that the user has with an issuer and may be identified through the use of a primary account identifier." *Id.,* 12:26-29. *Carlson* does not disclose details regarding the origination of the virtual card on the wireless device.

2. *Lin's* Teachings

171. *Lin* teaches a method for conducting a contactless transaction using a portable electronic device, wherein the user selects a virtual credit card on the device to use for the transaction. *Lin,* 23:4-9, 24:4-37. Specifically, *Lin* teaches a method wherein a user adds a credit card to a transaction application on the device. *Id.,* 21:36-48. Figs. 5A-5B are the images of the electronic device's screen displayed when a credit card is added to the transaction application. *Id.,* 21:36-39. For instance, screen 120 may display a first listing 122 of presently stored credit card accounts, a second listing 124 of stored banking accounts, a third listing 126 of stored non-cash accounts, and additional listings 128 of other accounts. *Id.,* 22:17-23. The user

initiates the process of entering and storing a new credit card account 136 by selecting graphical button 130. *Id.,* 22:39-41. The user then selects the provider of credit card to be stored in the device, and enters the account number 156, card verification value (CVV) code, and expiration date corresponding to the new credit card. *Id.,* 23:28-35. Once the credit card information has been provided by the user, the user may select the graphical button 168 to begin a credit card verification process. *Id.,* 24:4-7.

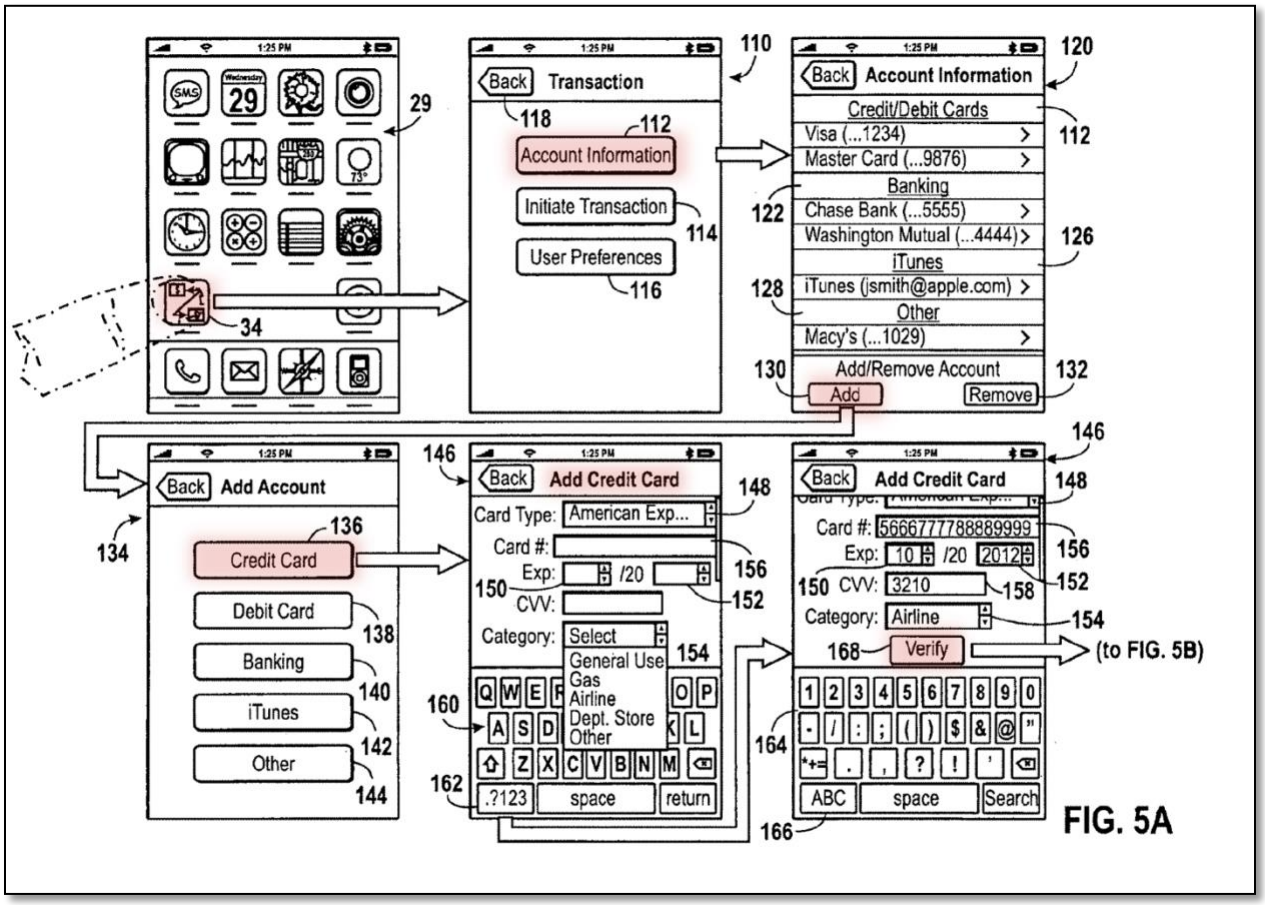

Id., Fig. 5A (annotated).

172. During the verification process (illustrated in Fig. 5B), the credit card information is transmitted to the corresponding credit card provider (e.g. American Express). *Id.,* 24:12-19. Once the credit card provider has verified that the credit card information is valid, the provider may transmit one or more verification codes to the device. *Id.,* 24:20-24. For instance, a notification message 172 may be displayed informing the user that a verification code for activating the credit card to be used on the device has been provided, such as by email. *Id.,* 24:25-28.

3. Carlson Modified Pursuant to *Lin*

173. *Carlson-Lin* uses the method of *Lin* to add a virtual credit card to the wireless device of *Carlson*. This occurs prior to the PPAI based financial transaction taught by *Carlson* and is a prerequisite to selecting the virtual card to be used in the transaction. Namely, *Carlson-Lin* teaches transmitting by the wireless device (*smartphone*) credit card information (*third data*) to the issuer (*second device*) and receiving a verification code from the issuer to enable use of the virtual card on the smartphone.[6] The credit card information and verification code are transmitted to

[6] A POSITA would have understood the issuer in *Carlson* and the credit card provider in *Lin* refer to the institution responsible for issuing credit cards. *Lin* expressly identifies American Express as a credit card provider. *Carlson* expressly identifies American Express as an issuer. *Carlson*, 9:8-10; *Lin*, 23:9-12. Thus, both *Carlson* and *Lin* identify American Express as an exemplary credit card provider/issuer, and

and from the issuer (credit card provider) via the long range-communication network of *Carlson*. *Carlson's* wireless device communicates with the payment processing network via communication with the access point 118 and communications network 116. *Carlson*, 14:60-65. In turn, "the payment processing network 110 is also operatively coupled to one or more issuer 112 systems through the transaction processing network 114." *Id.,* 11:65-67. Thus, a POSITA would have understood that the issuer (*second device*) is *distinct* from the server computer at the payment processing network (*first device*), which includes "data processing subsystems, networks, and operations used to support. . . clearing and settlement services" such as "VisaNet™". *Id.,* 10:62-11:2. *See also id.* 11:35-12:12 (discussing payment processing network 110 separately from issuer 112). The issuer is also *distinct* from the contactless reader/access device (*first entity*) that communicates with the wireless device via a short-range NFC link during the transaction as *Carlson* discloses the issuer receiving a message from the contactless reader through serial communications from the merchant, acquirer, and payment processing network. *Id.*, 11:65-12:12. Therefore, *Carlson-Holloway-ISO-14443-Lin* teaches the claimed *transmitting by the smartphone third data to a second device*.

---

that "issuer" in *Carlson* and "provider" in *Lin* are terms for the same entity—an institution that issues credit cards.

174. A POSITA would have been motivated to implement *Lin's* method of adding a credit card to *Carlson* for a number of reasons, as detailed below. First, *Carlson* expressly teaches a method of performing a transaction that begins when the user unlocks the device and selects a virtual card to use, but *Carlson* does not explain how a virtual card, used in the PPAI process, is initially added to the device. *Id.,* 12:25-33. However, *Carlson* discloses that cellular phones were known to be used as a payment card, storing a user's credit card number that can transmitted to a contactless reader. *Id.*, 1:21-41. *Lin* teaches performing a similar mobile-based financial transaction and details a method for adding virtual cards to a device. In view of *Carlson*'s disclosure of using a virtual card and acknowledgement that wireless devices were known to be used in this manner, a POSITA would have been motivated to use *Lin* as a guide to add a virtual card to the device of *Carlson*. A POSITA would have understood that adding a virtual card is a process that must be performed prior to performing a PPAI based financial transaction. *Id.*, 1:31-61 (discussing allowing the phone to transmit the account number, and a contactless card reader is able to retrieve the payment card information from the device); *see also Lin*, 24:38-53 (discussing the card cannot be used until it has been fully activated on the device). *Lin* provides the necessary disclosure for "entering and storing a new credit card account." *Lin*, 22:39-41, 21:36-25:17, Figs. 5A and 5B. Thus, a POSITA would have understood that *Carlson's* system requires some process

to add virtual cards and that *Lin*'s solution provides a viable means of providing this functionality.

175. Further, a POSITA would have had a reasonable expectation of success when implementing *Lin's* virtual card establishment process with *Carlson*. *Lin's* method of adding a credit card requires simple components that are commonly integrated in systems like *Carlson's.* For example, *Lin*'s device includes common components such as a CPU to execute an operating system, a GUI, RAM, touch screen interface, and one or more memory controllers. *Lin,* 11:32-12:11. *Lin's* device also includes communication interfaces, including WLAN, NFC, USSD, PAN, LAN, WAN, and SMS. *Id.,* 12:57-13:4. A POSITA would have understood these components to be common for wireless devices. *Carlson's* wireless device already includes the necessary elements for *Lin's* method such as a memory, processor, user input mechanism ("keypad entry, touch screen entry. . . and the like"), and long-range (cellular) communications capability. *Carlson*, 14:47-59, 15:45-48, 6:15-18. *Lin's* credit card information and verification code may be communicated via the long-range communication link. *Lin,* 12:65-13:4. Both *Lin* and *Carlson* similarly disclose wireless devices for transmitting information over long-range communication links. Thus, a POSITA would have had a reasonable expectation of success in transmitting the credit card information to, and receiving the verification

code from, the issuer via the long-range communication link in order to establish a virtual card to conduct financial transactions. *Carlson,* 14:60-15:5.

ii. [7(b)] receiving by the smartphone fourth data from the second device relating to an acknowledgement and/or authorization of enabling a mode/function to pay for a financial transaction,

176. *Carlson-Holloway-ISO-14443-Lin* teaches *receiving[,] by the smartphone[,]* a credit card verification code (*fourth data*) from the issuer (*second device*). *See supra* Claim 7(a). The verification code is required to add the credit card to the wireless device and enables the credit card to be used for a mobile transaction (*[enables] a mode/function to pay for a financial transaction*). *Lin,* 24:62-67. Completing the verification process renders the credit card "ready for use in conjunction with the transaction application." *Id.* Without authorizing or activating the credit card, the card "may not be used to make payments from the device." *Id.*, 24:41-46. A POSITA would have understood that rendering the credit card ready for use with the transaction application of *Lin* would subsequently render the *Carlson-Lin* device ready to request a PPAI to perform a financial transaction. Indeed, without a credit card added to the device, the user is unable to request a PPAI and perform a financial transaction. Therefore, a POSITA would have understood that the credit card verification code (*fourth data*) relates to an *authorization of enabling a mode/function to pay for a financial transaction*.

iii. [7(c)] wherein said transmitting by the smartphone third data to a second device and said receiving by the smartphone fourth data from the second device are performed over the air interface that differs from the first air interface.

177. Carlson-Holloway-ISO-14443-Lin teaches *transmitting by the smartphone* credit card information (*third data*) and *receiving by the smartphone* a credit card verification code (*fourth data*) from the issuer (*second device*). *See supra* Claims 7(a)-(b). The credit card information and verification code are transmitted and received, respectively, over the long-range communication (*air interface*) taught by *Carlson*. *See supra* Claim 7(a). Long-range cellular communication *differs* from short-range NFC (*first air interface*). *See supra* Claim 1(e).

B. Claim 8

i. [8(Pre)] The method of claim 1, wherein said operations further comprise:

178. *See supra* Claim 1.

ii. [8(a)] responsive to performing a financial transaction, causing data to be transmitted selectively to a plurality of predetermined devices and further causing data to be received selectively from said plurality of predetermined devices.

179. *Carlson-Holloway-ISO-14443-Lin* teaches transmitting and receiving data to and from a plurality of devices involved in a group transaction after an initial transaction has concluded.

1. *Lin's* Teachings

180. *Lin* teaches a system and method for performing a group transaction wherein one initiating device serves as the payor to the vendor and subsequently serves as the payee to receive payments from one or more payors from the group. *Lin*, 71:22-37. For example, in situations wherein a group of people wish to split a bill at a restaurant, "the initiator device 10 may act as the payor with respect to the vendor device 1176" during a primary transaction. *Id*., 71:55-60. The primary transaction consists of the initiator device conducting a financial transaction directly with the vendor (e.g., restaurant) on behalf of the group. *Id*., 71:60-72:25. Once the primary transaction has concluded, the initiator device may engage in secondary transactions to obtain payment from the other members of the group. *Id*., 72:25-28.

181. *Lin* teaches that "once the primary transaction 1172 has been completed, the initiator device 10 may ***transmit the current invoice 1192 to the NFC payor device 92*** by way of an ad-hoc network." *Id*., 72:36-39, Fig. 28. The current invoice 1192 reflects apportioned amounts owed by each transaction member. *Id*., 72:43-48. "Once the group invoice 1180 has been apportioned by the initiator on the initiator device 10, the amounts owed by each of the [other payors], may be communicated to these parties as a partial invoice." *Id*., 72:52-56, Fig. 28. *Lin* further explains that the partial invoice may be transmitted to an additional payor (e.g., NFC payor device 92, smart card 862, and magnetic credit card 954) via NFC connection. *Id*., 72:56-59. Subsequently, "a payment account may be selected on the NFC payor device 92

and, thereafter, ***be transmitted to the initiator device 10***" and the payment may be processed. *Id*., 72:64-73:20.

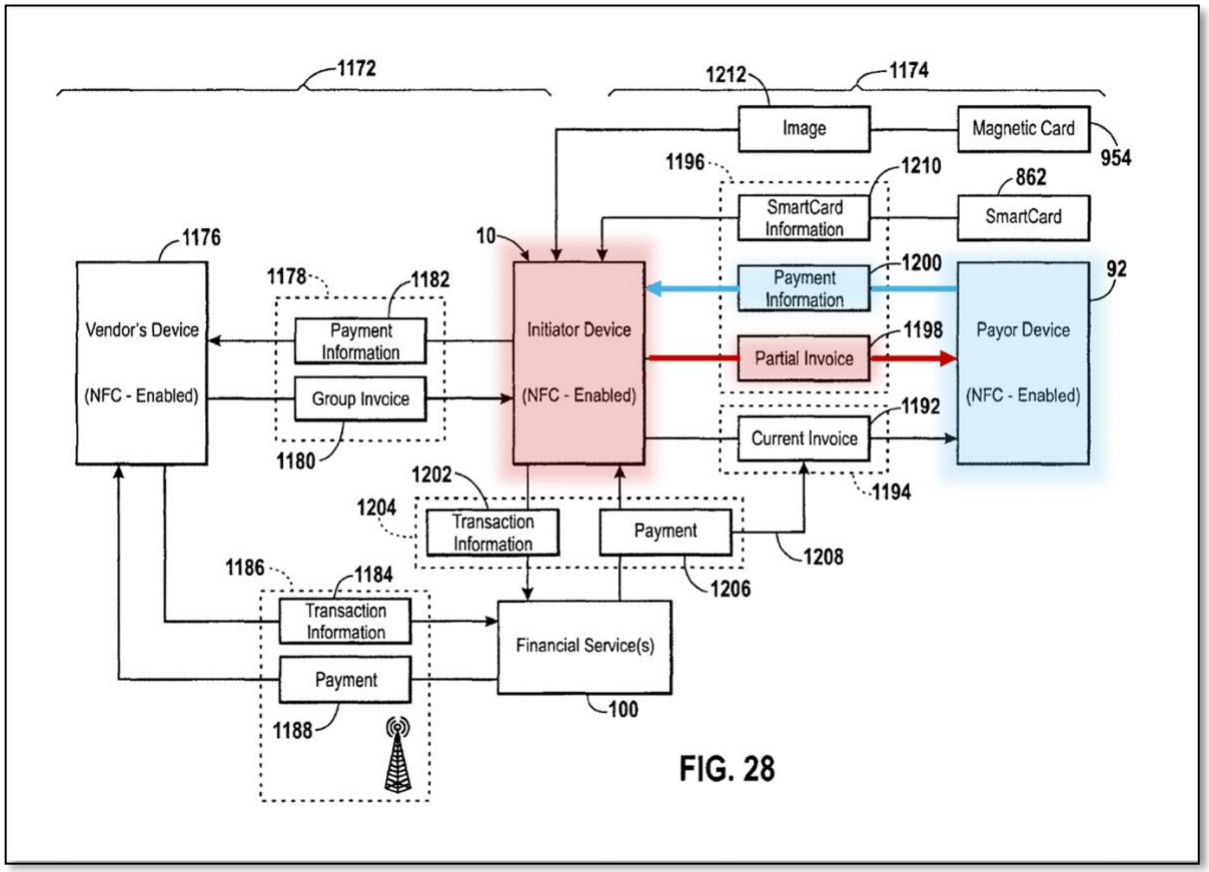

Id., Fig. 28 (annotated).

2. *Carlson* Modified Pursuant to *Lin*

182. *Carlson,* modified to perform group transactions pursuant to *Lin's* teachings, teaches *responsive to performing a financial transaction, causing data to be transmitted [and received] selectively to [and from] a plurality of predetermined devices*. Specifically, *Carlson-Lin* teaches *data* in the form of an invoice to be *transmitted* from the wireless device to additional payors (*plurality of predetermined*

devices) after the financial transaction has concluded (*responsive to performing a financial transaction*). *Carlson-Lin* further teaches *data* in the form of payment account information to be *received* at the wireless device from the same additional payors (*said plurality of predetermined devices*). *Lin* discloses "the initiator may apportion the group invoice 1180 in accordance with the amounts owed by each transaction member." *Lin*, 72:40-45. A POSITA would have understood that a specific payor may be apportioned a certain amount while a different payor may be apportioned a different amount. Thus, a POSITA would have understood the additional payors to be *predetermined* via the user, or initiator, choosing to make a specific payment request associated with a specific payor.

183. A POSITA would have been motivated to implement *Lin's* group transaction teachings with *Carlson* to provide convenience in facilitating split purchases. As described by *Carlson*, "the presence of portable wireless devices carried by consumers has become almost ubiquitous." *Carlson*, 1:21-22. Namely, a POSITA would have understood that *Lin's* process retains simplicity in the primary transaction between the user and the vendor while allowing the group to sort out independent contributions separately. For example, *Lin* describes a transaction application that enables both the primary transaction with the vendor and the secondary transaction with the group. *Lin*, Figs. 30A-30L, 74:36- 84:12 (showing the group transaction within the transaction application). Once the primary

transaction has concluded, *Lin* describes a flexible approach to dealing with the common problem of splitting a restaurant bill amongst multiple people, where each person may owe a different amount. *Id.*, 71:49-54 (describing one party initially paying the entire group's invoice containing amounts owed by each party), 72:41-45 (describing the initiator apportioning the group invoice amongst each party), Fig. 30A-30L. Employing *Lin's* group transaction process promotes flexibility for the group to be able to split the bill however they desire (e.g., equally, by item, or custom amounts). Each of *Carlson* and *Lin* describes similar devices for conducting mobile transactions. The wireless devices of *Carlson* and *Lin* each rely on NFC communication to effectuate short-range communications with neighboring devices. *See supra* ¶¶75-79 (discussing the overview of *Carlson*) and ¶¶89-92 (discussing the overview of *Lin*). Thus, a POSITA would have recognized that the proposed combination would improve *Carlson's* system in the same way *Lin's* similar system benefits from employing group transactions.

184. A POSITA would have had a reasonable expectation of success implementing the teachings of *Lin* with *Carlson*. *Lin's* group transaction process requires simple components already integrated in *Carlson's* system. For example, *Lin*'s device includes common components such as a CPU to execute an operating system, a GUI, RAM, touch screen interface, and one or more memory controllers. *Lin,* 11:32-12:11. *Lin's* device also includes communication interfaces, including

WLAN, NFC, USSD, PAN, LAN, WAN, and SMS. *Id.,* 12:57-13:4. *Lin* discloses the NFC interface is integrated into *Lin*'s electronic device. *Id.*, 13:64-14:17. A POSITA would have understood these components to be common for wireless devices. For example, *Carlson's* wireless device already includes the necessary elements for conducting a financial transaction via short range communications. *See, e.g., supra* Claim 1. Further, *Carlson* teaches conducting financial transactions and communicating via NFC specifically, consistent with *Lin's* teachings for the group transaction. *Compare Carlson,* 17:3-15 (discussing using NFC "typically in accordance with a standardized protocol or data transfer mechanism (e.g., ISO 14443/NFC") *with Lin,* 14:5-8 ("The NFC interface 60 may include one or more protocols, such as the Near Field Communication Interface and Protocols (NFCIP-1), for communicating with another NFC-enabled device."). Thus, a POSITA would have expected success in implementing the teachings of *Lin* into *Carlson's* similar system to include an additional transmission and receipt of information with additional payors.

C. Claim 16

i. [16(Pre)] The smartphone of claim 10, wherein said operations further comprise:

185. *See supra* Claim 10.

ii. [16(a)] transmitting third data to a second device; the second device being distinct from the first device and further being distinct from the first entity; and

186. *See supra* Claim 7(a).

iii. [16(b)] receiving by the smartphone fourth data from the second device relating to an acknowledgement and/or authorization of enabling a mode/function to pay for a financial transaction;

187. *See supra* Claim 7(b).

iv. [16(c)] wherein said transmitting by the smartphone third data to a second device and said receiving by the smartphone fourth data from the second device are performed over the air interface that differs from the first air interface.

188. *See supra* Claim 7(c).

D. Claim 17

i. [17(Pre)] The smartphone of claim 10, wherein said operations further comprise:

189. *See supra* Claim 10.

ii. [17(a)] responsive to performing a financial transaction, causing data to be transmitted selectively to a plurality of predetermined devices and further causing data to be received selectively from said plurality of predetermined devices.

190. *Carlson-Holloway-ISO-14443-Lin* teaches Claim 17(a). *Carlson-Holloway-ISO-14443-Lin* teaches a <u>*smartphone*</u> that causes data to be <u>*transmitted*</u> and <u>*received*</u> from a <u>*plurality of predetermined devices*</u>, wherein the <u>*smartphone*</u> initiates the transmission and subsequent reception of data. *See supra* Claim 8(a).

XI. OPINIONS REGARDING GROUND 3: CLAIM 9 IS OBVIOUS OVER *CARLSON* IN VIEW OF *HOLLOWAY, ISO-14443,* AND *SHERMAN*

A. Claim 9

i. The method of claim 1, wherein the second air interface comprises an Orthogonal Frequency Division Multiplexed and/or an Orthogonal Frequency Division Multiple Access (OFDM/OFDMA) technology.

191. *Carlson-Holloway-ISO-14443-Sherman* teaches Claim 9. As discussed in Claim 1(e), *Carlson* teaches a method of communication between a wireless device and a payment processing network, wherein the communication occurs using long-range cellular communication (<u>*second air interface*</u>). *Carlson*, 10:7-15, 6:26-31.

1. *Sherman's* Teachings

192. *Sherman* teaches a mobile communication device terminal, such as a cellular phone, that utilizes WiMAX transceivers for cellular communication in a manner that allows coexistence with RF communication. *Sherman,* Abstract, [0021], [0043], [0018], [0051]. *Sherman's* communication device comprises a "WiMAX radio and interface 123 and antenna 125." *Id*., [0054]. *Sherman* explains that WiMAX is "a ***long range system that uses licensed spectrum*** to deliver a point-to-point connection to the Internet from an ISP to an end user." *Id*., [0009]. *Sherman* further details that "mobile WiMAX technology is based on the IEEE 802.16e

standard" which defines WiMAX as a Time Division Duplex (TDD) operation that ***implements OFDM protocol***. *Id*., [0064], [0011].

2. Carlson Modified Pursuant to *Sherman*

193. A POSITA would have been motivated to implement *Carlson's* wireless device and communications network with *Sherman's* WiMAX mobile communication module. *Carlson* discloses "the portable wireless device 102 may include any such devices that contains a wireless communication element." *Carlson*, 9:61-62. *Carlson* describes his portable wireless device as having "one or more antennas coupled with wireless transmission elements," including "one or more antennas that are coupled with long range transmission elements." *Id.*, 9:64-66, 10:3-4. *Sherman* discloses the coexistence mechanism enabling WiMAX use "can be incorporated in numerous types of communication devices such [as] a multimedia player, cellular phone, PDA, etc.[.]" *Sherman*, [0044]. Indeed, WiMAX was a well-known and deployed cellular technology used by members of the public for licensed telecommunications. For example, WiMAX is a wireless communications solution based on IEEE 802.16 released as early as 2001. *Id.*, [0010]. *See also, Newton's Telecom Dictionary* (Ex. 1029), 1013. Further, WiMAX operated in a licensed frequency band. *Sherman*, [0009]. *Carlson* expressly teaches that its long-range communications may be conducted over cellular, but it does not specify which cellular technology should be used. A POSITA would have been motivated to look

at existing art to select a cellular technology to implement. *Carlson* contemplates base stations that "provide coverage to large geographic areas." *Carlson*, 10:9-13. WiMAX provides coverage to large areas. *Newton's Telecom Dictionary,* 1013 (discussing a line-of-sight range of 31 miles). *Carlson* and *Sherman* disclose similar cellular telephones and wireless networks. Accordingly, a POSITA would have been motivated to look to *Sherman* as a guide for implementing WiMAX. A POSITA would have understood that WiMAX was one of a small number of technologies deployed at the time for cellular data communications. Accordingly, a POSITA would have understood that the teachings of *Sherman* would apply to common wireless devices, like that described by *Carlson.* A POSITA would have also understood that the teachings of *Sherman* would apply to telecommunications networks, like communications network 116 of *Carlson.* For example, *Carlson* discloses the communications network 116 "may be one of any suitable form," including cellular network, public switched telephone network, RIM network, "or any other network capable of transmitting and receiving data between two or more endpoints." *Carlson*, 10:19-27. Therefore, a POSITA would have been motivated to implement WiMAX as the communications network of *Carlson*.

194. Further, a POSITA would have had a reasonable expectation of success when modifying *Carlson* according to *Sherman's* teachings. *Sherman's* WiMAX communication method requires simple components that are commonly integrated

into wireless devices like that of *Carlson.* For example, *Sherman* discloses the cellular phone includes many common elements, including a CPU, RF transceiver, antennas, and memory. *Sherman*, [0052]. To enable WiMAX communications, *Sherman* discloses a WiMAX radio and interface and antenna as well as a Bluetooth/WiMAX coexistence block. *Id.*, [0054], [0055]. *Carlson's* wireless device already includes a memory, processor, and short-range and long-range communication elements with cellular connectivity. *Carlson,* 14:47-59. *See also id.,* 9:61-66. *Carlson's* communication network also includes access point 118 which provides similar functionality as *Sherman's* WiMAX base station. For example, the communications network 116 communicates with the mobile wireless device via an access point 118, which "may be wireless base stations that provide coverage to large geographic areas." *Id.*, 10:10-11. WiMAX is long range communication protocol, achieving line-of-sight communications up to 31 miles. *Newton's Telecom Dictionary*, 1013. Therefore, WiMAX provides coverage to large geographic areas as contemplated by *Carlson*.

XII. OPINIONS REGARDING GROUND 4: CLAIMS 2-4, 11-13 ARE OBVIOUS OVER *CARLSON* IN VIEW OF *HOLLOWAY, ISO-14443,* AND *JAZAYERI*

A. Claim 4

i. The method of claim 1, wherein sending by the smartphone to the first entity, information associated with the second

data, is performed responsive to a value of at least one parameter associated with the smartphone.

195. *Carlson-Holloway-Jazayeri-ISO-14443* teaches Claim 4. *Carlson-Holloway* teaches *at least one physiological parameter having been sensed by at least one sensor of the smartphone*. *See supra* Claim 1(a). *Carlson-Holloway-Jazayeri* further teaches a biometric authentication process in which the sensed physiological parameter is converted to a numeric value and used to authenticate a user, causing the phone to be unlocked. Thus, *Carlson-Holloway* implementing *Jazayeri's* biometric authentication process teaches *a **value** of at least one parameter associated with the smartphone*.

1. *Jazayeri's* Teachings

196. Like *Carlson* and *Holloway*, *Jazayeri* discloses providing access to secure data on a device using biometric data such as "***fingerprint data*** . . . for identification and authentication purposes." *Jazayeri,* [0029]. To identify a user, *Jazayeri's* device "will capture the user's biometric data ***via the biometric sensor*** 214 then compare the biometric data against biometric templates stored in the non-volatile memory 206 for verification." *Id.,* [0030]. *Jazayeri's* biometric authentication process senses *a value of a parameter*.

197. *Jazayeri* teaches that after the user's biometric data is captured on the mobile device using the biometric sensor, the device, via a software application,

converts the biometric data "into specific match points" which are then "stored as a template used by the security processor to authenticate a user." *Id.,* [0046]. The match points are then "processed into a numeric value." *Id.*, [0046], Fig. 6 (step 606).

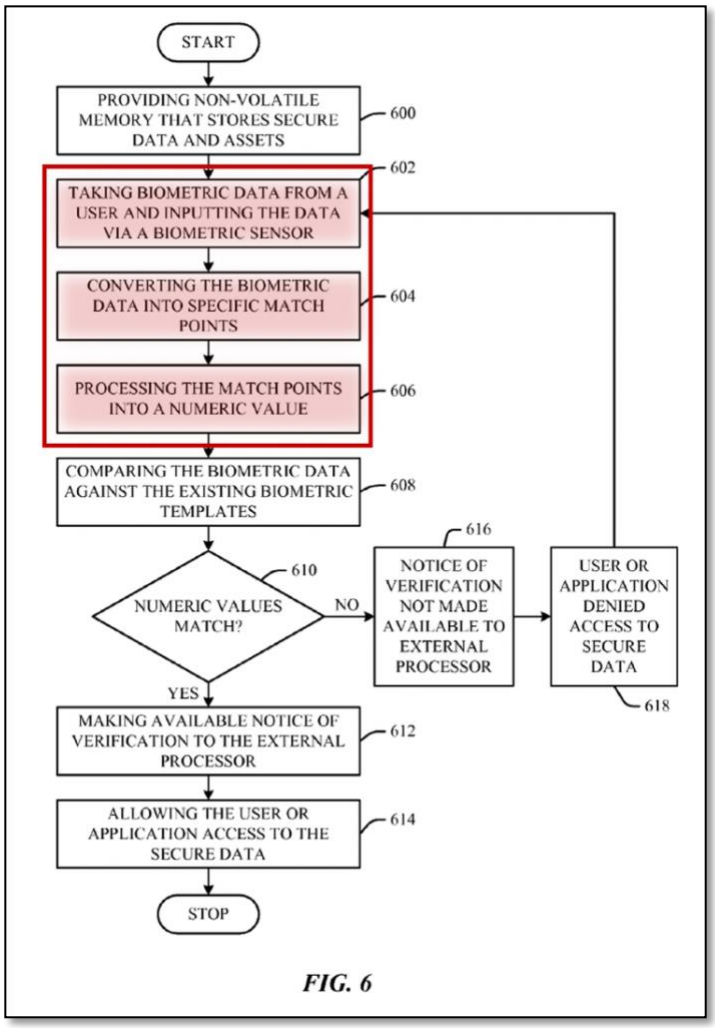

FIG. 6

Id., Fig. 6 (annotated).

2. Carlson Modified Pursuant to *Jazayeri*

198. *Carlson-Holloway* modified to unlock its device pursuant to the biometric authentication process described by *Jazayeri* teaches *a value of at least*

<u>one parameter</u>. As discussed above, *Carlson* discloses "biometric information (e.g. ***fingerprint***)" may be used to unlock a device, including a wireless device. *Carlson*, 12:13-24. *Jazayeri* discloses details on a biometric authentication system, including hardware elements and processing steps omitted by *Carlson,* describing how biometric data is sensed and, subsequently, used to authenticate the user. Specifically, *Jazayeri* discloses the security processor 204 "will capture the user's biometric data via the biometric sensor 214." *Jazayeri*, [0030], [0043] (discussing step 508 of Fig. 5).

199. For several reasons, a POSITA would have been motivated to modify *Carlson-Holloway's* device to implement *Jazayeri's* biometric authentication process. *Carlson* explicitly contemplates unlocking the device with a fingerprint before a user can proceed with a financial transaction but does not describe how this functionality is implemented. Although *Carlson* does not provide the details on unlocking a device through a fingerprint, it acknowledges that unlocking a device with biometric information is a "form of well known device access security." *Carlson*, 12:23-24. *Jazayeri* provides a detailed description of the authentication process for controlling access to a mobile device by scanning and authenticating with a fingerprint. *Jazayeri*, [0028]-[0032], [0041]-[0044]. *Jazayeri* discloses that biometric authentication was well-known and had "long been in use to provide additional security[.]" *Id.*, [0002]. Consistent with *Jazayeri's* teachings, a POSITA

would have understood that unlocking a device with biometric authentication was well-known. *See supra* ¶62. Thus, a POSITA would have been motivated to look to *Jazayeri* as a guide for implementing biometric authentication in *Carlson's* device as one known option.

200. A POSITA would have recognized that the proposed combination would improve Carlson's system in the same way *Jazayeri's* similar system benefits from more robust security realized by the biometric authentication process. *Carlson* and *Jazayeri* each describe similar systems. *Carlson* discloses a wireless device which may include "any such device that contains a wireless communication element" including "cellular telephones, Personal Digital Assistants (PDA), pagers and the like." *Carlson*, 9:59-64. *Jazayeri* similarly discloses a mobile device that can be "a multimedia player, a Personal Digital Assistant (PDA), a cellular phone, a hand held computing device, or any other similar wireless computing device." *Jazayeri*, [0031]. Further, both *Carlson* and *Jazayeri* describe using said wireless devices for financial transactions. *See supra,* ¶¶75-79 (discussing *Carlson*'s disclosure of cellular telephone/PDA performing *Carlson*'s disclosed financial transaction) and ¶¶84-85 (discussing *Jazayeri*'s mobile device implementing biometric authentication to authorize financial transactions).

201. Because *Carlson's* financial transactions involve access to sensitive financial data, a POSITA would have understood that strict security protocols were

necessary to secure that data. *Jazayeri* expressly teaches that "[r]obust security is imperative for network-based systems, particularly for applications that deal with sensitive information, to prevent unauthorized agents from intercepting, corrupting or publishing sensitive data." *Jazayeri*, [0001]. A POSITA would have understood the benefit of using strict security protocols to enable the financial transactions of *Carlson*. Biometric authentication provides added security over other security protocols such as PINs and passwords, which are easier to obtain or guess. Additionally, using a longer PIN or password is slower and less convenient to the user than biometric authentication. Thus, implementing biometric authentication provides added security and user convenience over the use of PINs or passwords.

202. Finally, a POSITA would have recognized that *Jazayeri's* match point-based biometric authentication process accurately detects a user's fingerprint without requiring precise placement on the sensor face. *Jazayeri* expresses a need in security systems to "perform with minimum disruption to users to ensure that authorized users are neither erroneously denied access nor unduly restricted in their duties." *Jazayeri*, [0001]. A POSITA would have understood that *Jazayeri's* match point comparison provides a security system that is both secure and functional. A POSITA would have understood that requiring a perfect match of the full biometric profile would lead to erroneous denials of access, while matching too few features would lead to unauthorized users gaining access. Accordingly, *Jazayeri's* match

point comparison strikes a balance between security and usability. In other words, a POSITA would have understood that the match point system disclosed by *Jazayeri* allows the rightful owner of the device to access the device while still enforcing strict security, both with minimal disruption to the user and minimizing false negatives. A POSITA would have understood that this allows for authorization when the user's fingerprint is not precisely placed on the scanner or where debris on the user's finger or the scanner causes slight variations in the scan.

203. Further, a POSITA would have had a reasonable expectation of success when modifying *Carlson* according to *Jazayeri's* teachings. *Jazayeri's* biometric authentication technique requires simple components that are commonly integrated in systems like *Carlson's*. For example, *Jazayeri*'s memory module 202, integrated into a mobile device (*Jazayeri*, [0031]), includes common hardware elements, including a security processor 204, non-volatile memory 206, and volatile memory 208. *Jazayeri*, [0028], Fig. 2. These elements are no more than common hardware elements housed within the secure memory module 202, where "access control rights of the non volatile memory can be set so that the security processor alone has access" to the contents of the memory. *Id.*, [0029]. In other words, *Jazayeri*'s security processor is secure because the access rights to the memory are secured through biometric authentication, not through sophisticated hardware that was generally unavailable or unknown to a POSITA. A POSITA would have understood *Carlson's*

wireless device already includes the necessary elements for *Jazayeri's* biometric authentication, such as a memory and processor. *Carlson*, 14:47-59. Further, *Carlson-Holloway* teaches the requisite biometric sensors necessary to capture a user's identity for use in *Jazayeri's* process. *Id*. Thus, a POSITA would have expected success in implementing *Jazayeri's* biometric authentication process to secure the financial transactions being executed on *Carlson-Holloway*'s wireless device.

B. Claims 2-4 and 11-13

204. Ground 4 provides an alternative mapping to Claims 2-4 and 11-13 to the extent PO argues that a second biometric authentication step, separate from unlocking the phone, is required. Specifically, *Carlson-Holloway* in view of *Jazayeri* teaches performing a second biometric authentication immediately prior to conducting a financial transaction. Ground 4 differs from Ground 1 only in the proposed modifications to *Carlson* pertaining to sensing a physiological parameter. *See, e.g., supra* Claim 2. In Ground 1, the proposed combination of *Carlson* and *Holloway* involved modifying *Carlson* pursuant to *Holloway's* biometric sensor (e.g., fingerprint scanner). In Ground 4 the proposed combination of *Carlson-Holloway* is unimpacted, and *Jazayeri* is incorporated for the purposes of alternatively mapping an additional biometric authentication step prior to conducting

the financial transaction.[7] All arguments and evidence from Ground 1 are hereby incorporated by reference. Petitioner sets forth the motivation to modify *Carlson* pursuant to *Jazayeri's* second biometric authentication step in the following paragraphs.

1. *Jazayeri's* Teachings

205. *Jazayeri* discloses authenticating a user via biometric data immediately prior to exchanging account information to make a purchase. *Jazayeri*, [0049]-[0052], Fig. 7.

[7] For Claim 4, specifically, *Jazayeri* is also used to teach *a value of at least one parameter*.

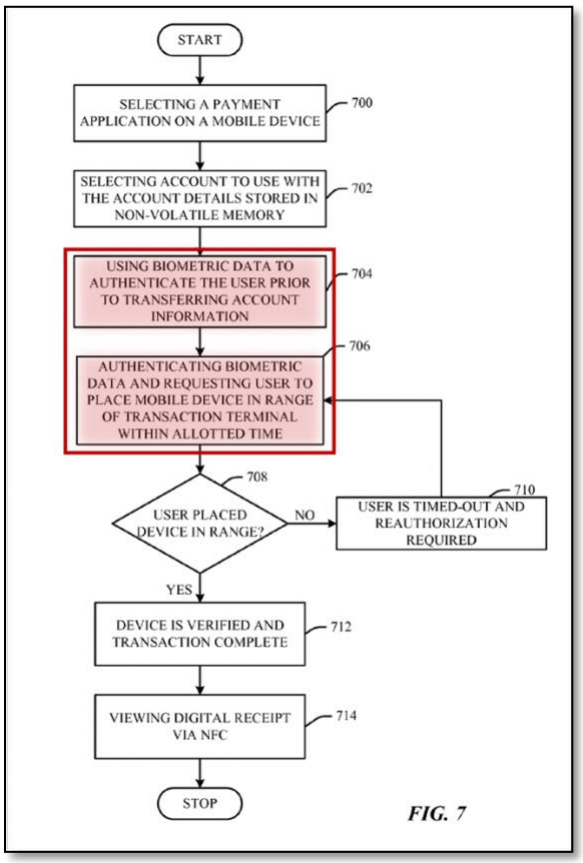

Id., Fig. 7 (annotated). At step 704, "biometric data is used to authenticate the user prior to transferring account information." *Id.*, [0050] ("If the data matches, notification of verification is made available to the user and account information is accessed"). Then, at step 706, "the biometric data is authenticated and the user has some amount of time (perhaps 5-10 seconds) to place the mobile device within the range of a transaction terminal before reauthorization is required." *Id.*, [0051].

2. Carlson Modified Pursuant to *Jazayeri*

206. A POSITA would have been motivated to further modify *Carlson* to include a second biometric authentication step immediately before conducting its

financial transaction, consistent with *Jazayeri's* teachings, for added security. Although *Carlson* teaches that the financial transaction cannot progress without unlocking the wireless device, a POSITA would have understood that there may be instances in which a user unlocks their wireless device independent from making a financial transaction. For example, wireless devices are capable of executing many different applications other than transaction applications, such as applications to make a call, send a text, send an email, or access the internet. *Carlson*, 1:21-30. Unlocking a wireless device provides the user access to the full suite of the device's installed applications, not just to the transaction application(s). *Carlson's* native process allows access to the financial transaction function regardless of the amount of time passed between unlocking the wireless device and selecting a virtual card. Giving access to the full suite of the device's applications based on a single, successful biometric authentication introduces a security risk to a wireless device with financial transaction capabilities. A user may lose possession of the wireless device in the unlocked state, potentially providing an unauthorized user the ability to make a financial transaction. Additionally, if an unlocked wireless device is capable of making financial transactions without further authorization, there is a risk that wireless transmissions can be intercepted while the user is not actively using the device to make a financial transaction, thus exposing the user's sensitive financial information. *Carlson*, 1:62-2:18. *Carlson* acknowledges this risk and proposes

entering a PIN "prior to enabling the short range wireless transmission element" to prevent malicious interception of sensitive information. *Id.*, 2:39-43. Thus, a POSITA would have been motivated to add/require a second biometric authentication, immediately preceding the financial transaction, in order to further protect access to sensitive financial information. Indeed, *Jazayeri* highlights the value in limiting access to financial information to a short temporal window to prevent unwanted or malicious access. *Jazayeri,* [0051] (restricting a user to 5-10 seconds to progress the transaction before requiring authentication again).

207. A POSITA would have considered this a straightforward modification, requiring zero additional components. Indeed, as previously discussed, *Carlson-Holloway* already teaches the biometric authentication to unlock the device. *See supra* Claims 1(a)-(c). Thus, the proposed modification would simply incorporate a temporal component via minimal software changes to facilitate the modification. First, *Carlson* expressly contemplates a user entering a PIN prior to activating the short-range communications element. *Carlson,* 2:39-43 ("it may be possible to require…a…(PIN) to be entered prior to enabling the short range wireless transmission element."). Second, *Carlson-Holloway-Jazayeri* includes the necessary hardware elements to conduct a biometric authentication. Adding a second biometric authentication in place of the PIN, as contemplated by *Carlson*, would have required nothing more than a routine change to the application's source code, something well

within the reach of a POSITA. Thus, a POSITA would have had a reasonable expectation of success in modifying *Carlson* consistent with *Jazayeri's* teachings to incorporate a second biometric authentication immediately prior to accessing financial information and establishing the short-range link.

XIII. OPINIONS REGARDING GROUNDS 5-8: CLAIMS 1-3, 5-6, AND 10-15 ARE OBVIOUS OVER *CARLSON* IN VIEW OF *MURAKAMI* AND *ISO-14443*; CLAIMS 7-8 AND 16-17 ARE OBVIOUS OVER *CARLSON* IN VIEW OF *MURAKAMI, ISO-14443* AND *LIN*; CLAIM 9 IS OBVIOUS OVER *CARLSON* IN VIEW OF *MURAKAMI, ISO-14443* AND *SHERMAN;* CLAIMS 2-4 AND 11-13 ARE OBVIOUS OVER *CARLSON* IN VIEW OF *MURAKAMI, ISO-14443,* AND *JAZAYERI.*

208. As discussed above in Grounds 1-4, *Carlson, Holloway, ISO-14443, Sherman, Lin,* and *Jazayeri* teaches, or at least renders obvious each limitation of the Challenged Claims according to the broad interpretation that I have been asked to apply for *physiological parameter*. *See supra* ¶50. Namely, Grounds 1-4 apply a broader interpretation of *physiological parameter* that captures static biometric data (e.g., a fingerprint). Grounds 5-8 apply a narrower interpretation aligned with the intrinsic record, sensing variable physiological state data. Capturing this narrower interpretation, Grounds 5-8 establish that a POSITA would have been motivated to modify *Carlson* pursuant to *Murakami*.

209. As set forth in detail below, a POSITA would have been motivated to implement *Murakami's* biometric sensor and authentication process taught by

Murakami. The biometric sensor of *Murakami* measures parameters associated with a heart rate and blood pressure of a user and compares the data to expected values to authenticate a user. *Murakami*, 19:4-20. Specifically, in one embodiment the sensor is used to measure a heartbeat waveform, a dynamic variable determined by measuring a user's heartbeat. *Id.*, 32:30-33:6. Measuring a user's heartbeat, as taught by *Murakami*, is a dynamic parameter that is consistent with a *physiological parameter* as described in the '432 Patent specification. *See* Section III.C.i (discussing *physiological parameter*).

210. Grounds 5-8 differ from Grounds 1-4 only in the proposed modifications to *Carlson* pertaining to the biometric sensor and authentication process. *See, e.g., supra* Claim 1(a). In Grounds 1-4, the proposed *Carlson-Holloway-ISO-14443* combination involved modifying *Carlson* pursuant to *Holloway's* biometric sensor (e.g., fingerprint scanner) and authentication. In Grounds 5-8, in place of *Holloway*, the proposed combination involves modifying *Carlson* pursuant to *Murakami's* biometric sensor and authentication process.

211. All arguments and evidence from Grounds 1-4 are hereby incorporated by reference. Petitioner sets forth the motivation to modify *Carlson* pursuant to *Murakami* in the following paragraphs.

A. *Murakami's* Teachings

212. Like *Carlson*, *Murakami* discloses providing access on a device after using biometric data to authenticate a user. *Murakami* describes a method and apparatus for using physiological biometric parameters to activate a device, participate in a transaction, or identify a user. *Murakami*, 1:8-13. *Murakami* discloses an infrared "***biometric authentication device 12***" (a sensor) incorporated into a mobile phone. *Id.*, 20:19-20, Figs. 1-2.

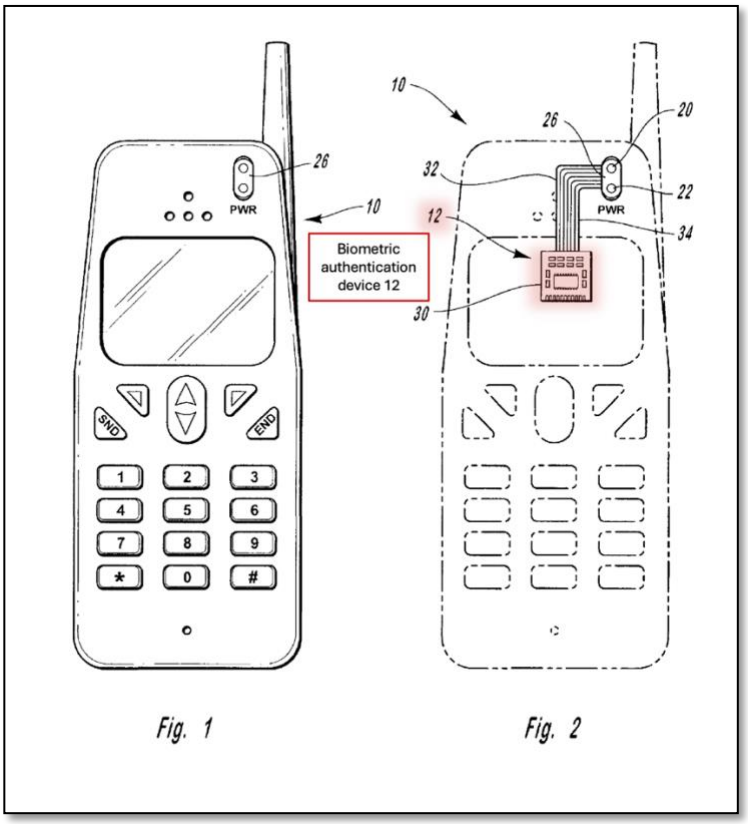

Id., Figs. 1 and 2 (annotated).

213. *Murakami* teaches that biometric parameters may be represented by a "composite waveform reflecting anatomical structure and physiological processes, such as blood flow, heart rate, blood pressure, and surrounding bone and blood vessel

structure." *Id.*, 19:9-12. When a user places their finger on the sensor, a signal is emitted by transmitter 20, partially absorbed by the user's tissue, and partially reflected into receiver 22. *Id.*, 20:27-33. The sensed signal is filtered and digitized into a waveform. *Id.*, 21:14-16. Features of the measured waveforms may be compared to stored waveforms, and based on their similarities, the system may "grant or deny access to a device or [provide] authorization for transaction." *Id.*, 16:35-17:3.

B. *Carlson* Modified Pursuant to *Murakami*

214. *Carlson* modified to unlock its device pursuant to the biometric authentication process described by *Murakami* teaches the claimed *physiological parameter* limitations. Specifically, *Murakami* discloses a biometric authentication device that measures parameters such as blood flow, heart rate, blood pressure, and others to authenticate the user. *Murakami*, 19:9-12.

215. A POSITA would have understood that modifying *Carlson* pursuant to *Murakami* would provide several benefits including increased privacy, minimized costs, consistency, and greater safety:

> For example, use of a physiological marker such as arterial blood pressure is ***less likely to raise the types of privacy issues associated with the use of fingerprints***, ***does not require expensive scanning equipment***, ***is not subject to behavioral variability***, and ***does not raise***

issues of undesirable and potentially infectious contact with sensitive tissues.

Id., 7:4-10. *Carlson* acknowledges the inherent risk of storing sensitive information on wireless devices and using the device to perform a financial transaction. *Carlson*, 12:13-24, 1:62-2:48. Accordingly, *Carlson* discloses a fingerprint authentication to unlock a wireless device and subsequent PIN authentication prior to performing transactions. *Id.*, 12:13-24, 1:62-2:48. *Murakami* similarly addresses authentication on wireless devices. *Murakami*, 1:8-28, Figs. 1 and 2. Thus, a POSITA would have recognized that the proposed combination would improve *Carlson's* system in the same way *Murakami's* similar system benefits from using a physiological marker for biometric authentication.

216. In addition to the reasons listed explicitly in *Murakami,* a POSITA would have been further motivated to implement *Murakami's* biometric authentication teachings to provide a system that balances user convenience and security. Biometric authentication systems such as *Murakami* often trade-off between security and usability. Demanding high precision from biometric readings creates a highly secure system—only the intended user is able to provide such high precision biometric data. But this often creates a poor user experience, resulting in the intended user being improperly rejected when his or her biometric data falls even slightly outside the narrow allowed window of values (often referred to as a "false

negative"). *Murakami* discloses a layering technique, which "employs the use of more than one biometric marker for authentication." *Murakami*, 9:5-11. Using multiple biometric markers increases security by reducing the likelihood an unauthorized individual will have biometric characteristics that will improperly grant them access to the device. *Murakami* further discloses a method to calibrate biometric markers, as certain markers are known to change with a user's age. *Id.*, 9:22-11:20. As part of the calibration, *Murakami* discloses that certain parameters are allowed to fall within a certain range and adjusting the template, for calibration purposes, based in part on the new authenticated value. *Id.*, 11:21-29. This allowance for biometric variance, including to account for changes to a user's physiology over time, ***improves the user experience*** by decreasing the prevalence of false negatives. A POSITA would have understood that *Murakami's* template comparison allows for expected variance in a user's physiology over time, avoiding false negatives while still providing a high level of accuracy/security, which results in a security system that is both secure and functional.

217. Further, a POSITA would have had a reasonable expectation of success when modifying *Carlson* according to *Murakami's* teachings. For example, *Murakami*'s authentication system is "designed to operate on a portable computerized device such as a PDA or cell phone." *Murakami*, 44:21-23. *Murakami's* biometric authentication technique requires simple components that are

commonly integrated in systems like *Carlson's*. Indeed, *Murakami* discloses the biometric authentication device "is incorporated into the power button 26 of the phone." *Id.*, 20:18-23, Fig. 1. *Carlson's* wireless device already includes the necessary elements for *Murakami's* biometric authentication such as a memory and processor. *Carlson*, 14:47-59. Further, biometric sensors were prolific in wireless devices at the time for use in biometric authentication. *See supra,* ¶62. *Murakami* states the computer industry has "recognized a growing need for sophisticated security systems [to] prevent unauthorized use." *Murakami*, 1:19-21. Further, Carlson expressly contemplates fingerprint-based authentication. *Carlson* explains that the transaction may begin when the user unlocks the wireless device 102 using biometric information (e.g., fingerprint data). *Carlson*, 12:13-24. Thus, a POSITA would have expected success implementing *Murakami's* biometric sensor on *Carlson*'s wireless device. This is supported by *Carlson's* explicit contemplation of using a fingerprint to unlock its wireless device. *Id.*

XIV. CONCLUSION

218. I declare that all statements made herein of my knowledge are true, and that all statements made on information and belief are believed to be true, and that these statements were made with the knowledge that willful false statements and the like so made are punishable by fine or imprisonment, or both, under Section 1001 of Title 18 of the United States Code.

Date: August 4, 2025

By: Stuart J Lipoff
Stuart Lipoff

Stuart J. Lipoff

Mr. Lipoff is president of IP Action Partners Inc, a consulting practice in TIME (telecommunications, information technology, media, electronics, and ebusiness) industries and technologies. He draws upon his over 50 years of experience in a wide variety of technologies and industries to assist clients with knowledge based consulting services involving complex business decisions and problem resolution.

Mr. Lipoff was employed 25 years by Arthur D Little, Inc (ADL) as VP and Director of Communications, Information Technology, and Electronics (CIE); 4 years by Bell & Howell Communications Company as a Section Manager, and 3 years by Motorola's Communications Division as a Project Engineer. At ADL he was responsible for the firm's global CIE practice in laboratory based contract engineering, product development, and technology based consulting. At both Bell & Howell and Motorola, he had project design responsibility for wireless communications and paging products.

Stuart Lipoff has Bachelor's Degrees in Electrical Engineering and in Engineering Physics, both from Lehigh University. He also has received a Masters Degree in Electrical Engineering from Northeastern University, and a MBA degree from Suffolk University.

Mr. Lipoff is a fellow of the IEEE Consumer Electronics, Communications, Computer, Circuits, and Vehicular Technology groups. He is a member of the IEEE Consumer Electronics Society National Board of Governors, and was the Boston Chapter Chairman of the IEEE Vehicular Technology Society. He served as 1996-7 President of the IEEE Consumer Electronics Society and as Chairman of the Consumer Electronics Society Technical Activities and Standards Committee. He served as VP of Publications for The Society and last year as VP of Industry and Standards for The IEEE Consumer Electronics Society. He is currently the historian for The Consumer Technology Society (formerly CESoc). He has also chaired the search committee for Sony supported Mazura Ibuka Award in consumer electronics and is a current committee member. As Vice President and Standards Group Chairman of the Association of Computer Users, he served as the ACU representative to The ANSI X3 Standards group. For the Federal Communications Commission's Citizens advisory committee on CB radio (PURAC), he served as Chairman of the task group on user rule compliance. He has been elected to membership in the Society of Cable Television Engineers (SCTE), The Association of Computing Machinery (ACM) , and The Society of Motion Picture and Television Engineers (SMPTE). He was also elected to membership in The Cable Television Pioneers.

Stuart Lipoff holds a FCC General Radiotelephone License and a Certificate in Data Processing (CDP) from the ACM supported Institute for the Certification of Computing Professionals (ICCP). He is a registered professional engineer (by examination) in The Commonwealth of Massachusetts and The State of Nevada.

Mr. Lipoff holds nine USA patents and has published articles in Electronics Design, Microwaves, EDN, The Proceedings of the Frequency Control Symposium, Optical Spectra, and numerous IEEE publications. He has presented papers at many IEEE and other meetings. In the fall of 2000, he served as general program chair for The IEEE Vehicular Technology Conference on advanced wireless communications technology. He has organized sessions at The International Conference on Consumer Electronics and was the 1984 program chairman. He

conducted an eight week IEEE sponsored short course on Fiber Optics Systems Design. In 1984, he was awarded IEEE's Centennial Medal and in 2000 IEEE's Millennium Metal.

He has served as a member of the USA advisory board to the National Science Museum of Israel and has presented a short course on international product development strategies as a faculty member of Technion Institute of Management in Israel. He also served as a member of the board of directors of The Massachusetts Future Problem Solving Program.

Mr Lipoff is internationally recognized as an authority and opinion leader in new economy related businesses and technology. Citations supporting his recognition can be found on his web site at http://www.ipaction.com .

Some examples of projects he has performed in the cable TV and broadband telecommunications sector include:

- Leadership of the project which developed the series of DOCSIS specifications for high speed residential cable modems. The scope of work included developing a roadmap and strategic framework for evolving the business from simple high speed internet services to multimedia broadband services combining voice, data, and secure electronic content delivery. This project was performed under contract to the MCNS consortium of cable TV operators representing 85% of the subscriber base in North America and has since been adopted by the United Nations as a global telecommunications standard.

- Under contract to The National Cable Telecommunications Association (NCTA), I represented the point of view of the cable industry in an FCC workshop on universal broadband availability. This project involved a presentation on the technical capabilities of the cable industry DOCSIS cablemodem infrastructure, a comparison of cablemodem services with DSL, fiber to home, and wireless broadband. Issues related to net neutrality were included in the discussion. Following the FCC workshop, I was further commissioned by NCTA to prepare a white paper comparing DOCSIS cablemodem services with fiber to the home services such as FiOS.

- For Next Generation Network Architecture llc (NGNA llc) consortium of Comcast, Cox, and Time-Warner; I managed the project that produced a five year planning horizon vision for the services and technology the cable industry will seek to deploy. The services and vision were then mapped to overall architectures impacting network elements in the back office, head-end, outside plant, and customer premises and documented in next generation network recommendations. The project involved coordination with over fifty senior technical staff in the three cable MSO sponsors as well as interactions with over 100 suppliers of systems, software, and products to the cable industry. The recommendations and findings were wide ranging including, for example: software defined downloadable conditional access (CA) systems, migration of the outside plant from low to mid split, bridging from network CA to in-home network digital rights management systems (DRM), and migration from 1way to 2way digital TV.

- For The National Association of Broadcasters (NAB) I managed a project to engage NAB members in the development of new applications and services for over-the-air radio and television broadcasting. The project included developing a list and priority recommendations for research projects for consideration of funding by NAB which would explore the most promising candidate research projects.

- For the cable operator consortium SpectrumCo I supported exploration of alternative means to provide competitive public network wireless services to existing cable and new customers. The project involves exploring 3rd and 4th generation wireless air-interface technologies and developing models that integrate capital expenditures forecasts with operating profits to develop financial performance perspectives of alternatives. A unique aspect of this project includes developing technology forecasts and estimates of subscriber equipment capable of supporting video and multimedia content delivery to handsets.

- For COMCAST Cablevision of Philadelphia, I assisted in the development of a family of advanced two-way, residential digital services, including: development of system/service concepts and specification/selection of a range of equipment to provide this service. Detailed operating and balance sheet financial models of were developed to measure financial attractiveness of alternatives and use as a tool to select specific strategies.

- For a division of Westinghouse in cooperation with Kansai Electric (Japan), I developed detailed business plans for the launch of cable TV and associated broadband services. The project involved demand studies to assess adoption and desires of consumers followed by recommendations on marketing, operating, and technology strategies.

- For the Westinghouse Teleprompter Cable Company, I studied the market for a fiberoptic based institutional data network in Pittsburgh and developed the business and financial models to examine the financial attractiveness of offering these services.

- For Times Mirror Cable TV, I developed business plans for the upgrade of selected systems to 2way capability and exploration of alternative telephony and other advanced services to be provided. I worked with the client to develop risk/reward perspectives for specific service options and develop a roadmap in order of most attractive priorities.

- Analysis and recommendations in a study funded by CableLabs which led to today's hybrid-fiber coax architecture widely deployed worldwide for delivering broadband multimedia services to the home. The project involved developing forecasts of technology trends in parallel with projecting the business applications. Detailed proforma financial models were developed to make the cost/benefit of deploying this technology visible to the cable industry, and strategies were developed and recommended to the industry.

- Leadership of a project jointly funded by The National Association of Broadcasters and Maximum Service TV Association to analyze options to accelerate the adoption of digital TV technology by consumers. My recommendations were provided to the FCC and were the basis for the August 2002 report and order the FCC issued to mandate a roll-out schedule for digital TV receivers.

- For Bell South I contributed to a major operations improvement project involving developing forecasts of the future competitive environment, customer needs, a strategy to compete, and new business models. These forecasts were then applied to develop business redesign recommendations and a list of new services offerings.

- For Magnavox Cable TV (a division of N.A. Philips) I performed comparative cost and technical analysis of fiber optics versus conventional coax systems. This analysis was followed by the development of strategies and sales support materials to pitch the new HFC systems to cable TV operators.

- I performed additional work for The Cable Television Laboratories in which I studied the application of remote and distributed antennas supporting microcellular PCS on hybrid fiber-coax cable TV systems. A key issue explored was the requirement for the fiber optic portion of the plant to carry the PCS carriers in analog form and deal with the wide dynamic range demands for inbound signals.

- For a consortium of the major cable TV operators consisting of Comcast, Time Warner, Cox, and Rogers; I developed models for prediction of reliability of alternative HFC architectures and their suitability to provide local exchange voice services competitive with ILECs. The project required understanding the reliability specifications employed in conventional local exchange carrier telephone plant and the contributions between hardware, power, and workmanship failures. Each of three alternative fiber optic architectures for cable delivered voice telephony were studied and modeled to develop reliability predictions and recommendations were made as to which aspects of the three alternatives were the best choice for cable delivered voice telephony.

- For GTE Systems I prepared a presentation on developing commercial opportunities for wide-bandwidth ATM switching. The scope of applications included: metro area network LAN interconnect, broadcast studio digital video routing and switching, and distributed switching for digital wireless personal communications networks. The goal of the project was to explore cable TV and other commercial applications for their military systems broadband switching technology.

- For Bellcore (now Telcordia division of SAIC), I evaluated the R&D portfolio of their Applied Research Group. The main components of this portfolio were DWDM technologies for long haul interLATA communications as well as optical multiplexing components for passive optical network applications in cable TV and advanced broadband residential services. I provided R&D planning assistance on the allocation of funding and priorities to the R&D efforts and identified opportunities for securing intellectual property rights to critical R&D efforts.

- For the ViaSat Division of Modern Times Group (Sweden) I developed business plans for the launch of a new service that bundled discounted long distance telephone services with direct to home satellite TV services and other interactive services including gambling via the set-top box.

- For Magnavox Cable TV, I supported the development of a set-top-box cable converter with a microcomputer based user interface and conditional access system. The product was sold in both the USA and Canada.

- For Southern New England Telephone (SNET), he supported the launch of a video dial tone service. He contribution to the project included engineering and cost analysis of system alternatives as well as assisting with the preparing of RFPs for set-top-boxes and other network elements.

• Provided expert report and deposition testimony as technical expert, retained by Samsung in the cases captioned below:

UNITED STATES PATENT AND TRADEMARK
OFFICE BEFORE THE PATENT TRIAL AND APPEAL
BOARD
SAMSUNG ELECTRONICS AMERICA, INC,
Petitioner vs
PARUS HOLDINGS, LLC, Patent Owner
IPR2023-00163
Patent
7,386,455 and
IPR2023-00162
Patent 6,721,705

• Provided expert report as technical expert, retained by Local Networks in the case captioned below:

NORTHERN DISTRICT OF INDIANA
FORT WAYNE DIVISION
Civil Action No. 1:21-cv-00088
WESTWOOD ONE, LLC Plaintiff
vs
LOCAL RADIO NETWORKS, LLC,Defendant

U.S. Patent Nos. 7,412,203 and 7,860,448

• Provided expert report as technical expert, retained by KAJEET in the case captioned below:

UNITED STATES PATENT AND TRADEMARK
OFFICE
BEFORE THE PATENT TRIAL AND APPEAL
BOARDNORTONLIFELOCK, INC.,Petitioner
v.
KAJEET, INC., Patent Owner
U.S. Patent No. 8,667,559
Inter Partes Review Case No.: IPR2022-00001

• Provided Declaration and Deposition as technical expert, retained by GoTV in the case captioned below:

THE UNITED STATES PATENT AND TRADEMARK OFFICE
ex parte review (“EPR”) of U.S. Patent No. 8,989,715

and

IN THE UNITED STATES DISTRICT COURT
CENTRAL DISTRICT OF CALIFORNIA—WESTERN DIVISION
Case No. 2:22-cv-07556-RGK-SHK
GOTV STREAMING, LLC, Plaintiff
v.
NETFLIX, INC., Defendant
REGARDING PATENTABILITY AND NON-INVALIDITY OF U.S. PATENT
NOS. 8,478,245; 8,989,715; AND 8,103,86

• Provided declaration as technical expert, retained by Google in the case captioned below:

UNITED STATES PATENT AND TRADEMARK OFFICE
BEFORE THE PATENT TRIAL AND APPEAL BOARD

SONOS, INC., Petitioner,
v.
GOOGLE, LLC, Patent Owner.

Case No. IPR2023-00118
U.S. Patent No. 10,134,398

and

Case No. IPR2023-00119
U.S. Patent No. 10,593,330

and

Case No. IPR2023-00118
U.S. Patent No. 10,134,398

• Provided expert report as technical expert, retained by BMW in the case captioned below:

UNITED STATES DISTRICT COURT
FOR THE EASTERN DISTRICT OF TEXAS
MARSHALL DIVISION
Case No. 2:22-cv-00486-JRG (Lead Case)

NORTHSTAR SYSTEMS LLC, Plaintiff,
v.
VOLKSWAGEN AG, Defendant.

AND Case No. 2:22-cv-00496-JRG (Member Case)

NORTHSTAR SYSTEMS LLC, Plaintiff,
v.
BAYERISCHE MOTOREN WERKE AG, Defendant

• Provided declaration as technical expert, retained by Google in the case captioned below:

UNITED STATES PATENT AND TRADEMARK OFFICE
BEFORE THE PATENT TRIAL AND APPEAL BOARD

GOOGLE LLC, Petitioner,
v.
DH INTERNATIONAL LTD., Patent Owner.

Case No. IPR2024-01322
Patent No. 9,022,294

Case IPR2024-01321
Patent No. 7,628,333

• Provided expert report and deposition testimony as technical expert, retained by Samsung in the cases captioned below:

UNITED STATES PATENT AND TRADEMARK OFFICE BEFORE THE PATENT TRIAL AND APPEAL BOARD
SAMSUNG ELECTRONICS AMERICA, INC,
Petitioner vs
PARUS HOLDINGS, LLC, Patent Owner
IPR2023-00163
Patent
7,386,455 and
IPR2023-00162
Patent 6,721,705

• Provided expert report and deposition testimony as technical expert, retained by HID in the cases captioned below:

THE UNITED STATES PATENT AND TRADEMARK OFFICE
BEFORE THE PATENT TRIAL AND APPEAL BOARD
ASSA ABLOY AB, ASSA ABLOY Inc., ASSA ABLOY Residential Group, Inc., August Home, Inc., HID Global Corporation, and ASSA ABLOY Global Solutions, Inc.,Petitioners,
vs
CPC Patent Technologies PTY LTD.,Patent Owner. Case No. IPR2022-01006
Patent No.
9,665,705 and
Case IPR2022-01045
Patent 9,269,208 (Claims 1-9)
and
Case IPR2022-01089
Patent 9,269,208 (Claims 10-13)

• Provided expert report and deposition testimony as technical expert, retained by HID in the cases captioned below:

THE UNITED STATES PATENT AND TRADEMARK
OFFICE BEFORE THE PATENT TRIAL AND APPEAL
BOARD
ASSA ABLOY AB, ASSA ABLOY INC., ASSA ABLOY RESIDENTIAL GROUP, INC., AUGUST HOME, INC., HID GLOBAL CORPORATION, ASSA ABLOY GLOBAL SOLUTIONS, INC.,
Petitioner, vs
CPC PATENT TECHNOLOGIES PTY LTD., Patent Owner.
Case IPR2022-01093 (US Patent No. 8,620,039)
and
Case IPR2022-01094 (US Patent No. 8,620,039)

• Provided expert report and deposition testimony as technical expert, retained by Google in the cases captioned below:

THE UNITED STATES PATENT AND TRADEMARK
OFFICE BEFORE THE PATENT TRIAL AND APPEAL
BOARD
GOOGLE LLC, Petitioner,

v.
PARUS HOLDINGS INC., Patent Owner.
Case No. IPR2022-00358
Patent No. 7,881,941
and
Case No. IPR2022-00523
Patent No. 8,185,402

• Provided expert report and deposition testimony as technical expert, retained by Samsung in the case captioned below:

IN THE UNITED STATES DISTRICT COURT FOR THE WESTERN DISTRICT OF TEXAS, WACO DIVISION
PROXENSE, LLC, Plaintiff,
vs.
SAMSUNG ELECTRONICS, CO., LTD., and SAMSUNG ELECTRONICS AMERICA, INC.,Defendants.
Case No.6:21-cv-00210-ADA

• Provided expert report and deposition testimony as technical expert, retained by WSOU INVESTMENTS in the case captioned below:

In THE UNITED STATES DISTRICT COURT FOR THE WESTERN DISTRICT OF TEXAS. WACO DIVISION
WSOU INVESTMENTS, LLC D/B/A, BRAZOS LICENSING AND DEVELOPMENT,:Plaintiff,
vs. · · · :
MICROSOFT CORPORATION, Defendant
No. 6:20-CV-00464-ADA·

• Provided expert declarations and deposition testimony as a technical expert in support of IPRs before The United States Patent Office Trial and Appeal Board

Clients: 3G LICENSING S.A.-Sisvel Patent Owner

Adverse Party: DELL, INC, Petitioners

In the matter of PTAB Case No. IPR2020-1157 U.S. Patent No. 7,274,933
PTAB Case No. IPR2021-0584 U.S. Patent No. 7,551,625
PTAB Case No. IPR2020-1162 U.S. Patent No. 8,948,756
PTAB Case No. IPR2020-1158 U.S. Patent No. 7,460,868
PTAB Case No. IPR2020-1159 U.S.Patent No 7,596,375
PTAB Case No. IPR2020-1160 U.S. Patent No. 8,275,374
PTAB Case No. IPR2020-1161 U.S. Patent No. 8,472,955

• Provided expert report, deposition testimony, and testified at ITC hearing as technical expert, retained by Roku in the case captioned below:

Before The UNITED STATES INTERNATIONAL TRADE COMMISSION
CERTAIN ELECTRONIC DEVICES, INCLUDING STREAMING PLAYERS, TELEVISIONS,SET TOP BOXES, REMOTE CONTROLLERS, AND COMPONENTS THEREOF
Investigation No.337-TA-1200

• Provided expert report and deposition testimony as technical expert, retained by Sisvel International in the case captioned below:

UNITED STATES DISTRICT COURT SOUTHERN DISTRICT OF FLORIDA
Miami Division
SISVEL INTERNATIONAL S.A., 3G
LICENSING S.A., and SISVEL S.p.A.,
Plaintiffs,
v.
HMD AMERICA, INC. and
HMD GLOBAL OY,
Defendants.
Case No.: 20-22051-CIV-GAYLES

• Provided expert report and deposition testimony as technical expert, retained by Sisvel International in the case captioned below:

UNITED STATES DISTRICT COURT NORTHERN DISTRICT OF TEXAS
SISVEL INTERNATIONAL S.A., 3G LICENSING S.A.,
Plaintiffs,
v.
ZTE (USA), INC. AND ZTE CORPORATION,
Defendants.
Civil Action No. 3:19-cv-01694-N

• Provided expert declarations and deposition testimony as a technical expert in support of an IPR before The United States Patent Office Trial and Appeal Board

Clients: GOOGLE LLC,, Petitioners

Adverse Party: PARUS HOLDINGS INC., Patent Owner.

In the matter of PTAB Case No. IPR2022-00279 U.S. Patent No. 6,721,705

• Provided expert declarations and deposition testimony as a technical expert in support of IPRs before The United States Patent Office Trial and Appeal Board

Clients: GOOGLE LLC,SAMSUNG ELECTRONICS CO.,LTD., SAMSUNG ELECTRONICS AMERICA,INC., LG ELECTRONICS INC.,and LG ELECTRONICS U.S.A.,INC., Petitioners

Adverse Party: PARUS HOLDINGS INC., Patent Owner.

In the matter of PTAB Case No.IPR2020-00846 U.S. Patent No.7,076,431
PTAB Case No.IPR2020-00847 U.S. Patent No.9,451,084
PTAB Case No.IPR2022-00355 U.S. Patent No.7,386,455
PTAB Case No.IPR2022-00358 U.S. Patent No. 7,881,941

• Provided expert declarations and deposition testimony as a technical expert in support of IPRs before The United States Patent Office Trial and Appeal Board

Client: GOOGLE LLC Petitioner

Adverse Party: HAMMON DEVELOPMENT INTERNATIONAL, INC. Patent owner

In the matter of: PTAB CASES IPR2020-00020 and IPR2020-00080
U.S. Patent No. 9,264,483 and U.S. Patent No. 10,264,032

• Provided expert reports and deposition testimony on invalidity and trial testimony retained by DISH Network L.L.C.and EchoStar Technologies L.L.C .as a technical expert in the case captioned below:

THE UNITED STATES DISTRICT COURT FOR THE DISTRICT OF UTAH
Case No. 2:14-cv-00191-DN

In the Matter of United States Patent Numbers 7,577,970; 7,526,784; 7,543,318; and 6,898,799

Plaintiffs: ClearPlay, Inc.,

Defendants: DISH Network L.L.C.and EchoStar Technologies L.L.C

• Provided expert declarations and deposition testimony as a technical expert in support of IPRs before The United States Patent Office Trial and Appeal Board

Client: TCT MOBILE (US)INC. & TCT MOBILE,INC.Petitioners,

Adverse Party: WIRELESS PROTOCOL INNOVATIONS,INC. Patent Owner

In the matter of U.S.Patent No.8,274,991 PTAB Case IPR2016-01494

• Provided expert report, deposition testimony, and trial testimony as a technical expert retained by Samsung in the case captioned below:

The United States International Trade Commission
Investigation No. 337-TA-1170
In the Matter of CERTAIN MOBILE DEVICES WITH MULTIFUNCTION EMULATORS
Complainants: DYNAMICS INC
Respondents: SAMSUNG ELECTRONICS CO. LTD

• Provided expert report, deposition testimony, and testified at ITC hearing as technical expert, retained by ONE WORLD in the case captioned below:

The United States International Trade Commission

Investigation No. 337-TA-1016 (Modification Proceeding)

In the Matter of–CERTAIN ACCESS CONTROL SYSTEMS AND COMPONENTS THEREOF

Complainants: THE CHAMBERLAIN GROUP, INC
Respondents: ONE WORLD TECHNOLOGIES, INC. D/B/A TECHTRONIC INDUSTRIES POWER EQUIPMENT.

• Provided hearing testimony before The U.S. Court of International Trade on behalf of ONE WORLD TECHNOLOGIES relative to U.S. PATENT NO. 7,161,319 in the matter captioned below:

Court No. 18-00200
ONE WORLD TECHNOLOGIES, INC., :Plaintiff,
v.
UNITED STATES, UNITED STATES :
DEPARTMENT OF HOMELAND SECURITY, :
UNITED STATES CUSTOMS AND BORDER :
PROTECTION, and COMMISSIONER KEVIN K. MCALEENAN, Defendants. :

• Provided declarations in support of IPRs before The United States Patent Office Trial and Appeal Board

Client: SECURUS TECHNOLOGIES, INC.
Adverse Party: GLOBAL TEL*LINK CORPORATION In the matters of: U.S. PATENT No. 9,521,250
U.S. PATENT No. 9,307,386
U.S PATENT No. 9,094,500
U.S PATENT No. 8,929,525
U.S PATENT No. 7,248,685
U.S. PATENT No. 9,509,856

• Provided declarations and deposition testimony in support of IPRs before The United States Patent Office Trial and Appeal Board

Client: SECURUS TECHNOLOGIES, INC.
Adverse Party: GLOBAL TEL*LINK CORPORATION In the matters of: U.S. PATENT No. 8,855,280 and U.S PATENT No. 8,606,229

• Provided declarations in support of an IPR before The United States Patent Office Trial and Appeal Board

Client: TCT MOBILE (US) INC. & TCT MOBILE, INC
Adverse Party: WIRELESS PROTOCOL INNOVATIONS, INC. In the matter of: U.S. PATENT NO. 9,125,051

• Provided declarations in support of a petition for petition for covered business method review before The United States Patent Office Trial and Appeal Board
Client: COMCAST CABLE COMMUNICATIONS, LLC, Petitioner
Adverse Party: PROMPTU SYSTEMS CORPORATION, Patent Owner.
In the matters of: U.S. Patent RE44,326
U.S. Patent 7,047,196

• Provided declarations and deposition testimony in support of IPRs before The United States Patent Office Trial and Appeal Board
Client: TCT MOBILE (US) INC. & TCT MOBILE, INC
Adverse Party: WIRELESS PROTOCOL INNOVATIONS, INC. In the matters of: U.S. PATENT NO. 8,565,256
U.S. PATENT NO. 8,274,991

• Provided expert report and testified at ITC hearing as technical expert, retained by ONE WORLD in the case captioned below:
The United States International Trade Commission
Investigation No. 337-TA-1016
In the Matter of–CERTAIN ACCESS CONTROL SYSTEMS AND COMPONENTS THEREOF
Complainants: THE CHAMBERLAIN GROUP, INC
Respondents: ONE WORLD TECHNOLOGIES, INC. D/B/A TECHTRONIC INDUSTRIES POWER EQUIPMENT.

• Provided declarations in support of IPRs before The United States Patent Office Trial and Appeal Board
Client: Comcast Cable Communications, LLC, Petitioner
Adverse Party: Adverse Party: OpenTV, Inc., Patent Owner
In the matters of: U.S. Patent 7,028,327
U.S. Patent 6,345,389

• Provided declarations in support of IPRs before The United States Patent Office Trial and Appeal Board
Client: ONE WORLD TECHNOLOGIES, INC. D/B/A TECHTRONIC INDUSTRIES POWER EQUIPMENT
Adverse Party: THE CHAMBERLAIN GROUP, INC In the matters of: U.S. PATENT NO. 7,224,275
U.S. PATENT NO. 7,161,319
U.S. PATENT NO. 7,339,336
U.S. PATENT NO. 7,196,611
U.S. PATENT NO. 7,635,966
U.S. PATENT NO. 6,998,977

• Provided expert reports and deposition testimony on invalidity, retained by Google as a technical expert in the case captioned below:

In The United States District Court for the District of Delaware
Civil Action No. 13-429-SLR
Plaintiffs: HBAC MATCHMAKER MEDIA,
INC Defendants: GOOGLE INC., et al
In the matter of U.S. PATENT NOS. 5,774,170 AND 6,002,393

• Provided declarations in support of IPRs before The United States Patent Office Trial and Appeal Board in the matter captioned below:

Client: GOOGLE ,INC., Petitioner,

Adverse Party: UNILOC USA,INC.and UNILOC LUXEMBOURG,S.A., Patent Owner.

In the matters of: U.S.Patent No.7,853,000
U.S.Patent No.7,804,948
U.S.Patent No.8,571,194

• Provided declarations in support of IPRs before The United States Patent Office Trial and Appeal Board

Client: LIVE PERSON, INC., PETITIONER
Adverse Party: 24/7 CUSTOMER, INC. 24/7 CUSTOMER INTERNATIONAL HOLDINGS, LTD., PATENT OWNER
In the matters of: U.S. Patent 6,798,876
U.S. Patent 7,027,586
U.S. Patent 7,751,552
U.S. Patent 9,077,804

• Provided declarations in support of IPRs before The United States Patent Office Trial and Appeal Board

Client: DTS, Inc. and Phorus, Inc., PETITIONER
Adverse Party: Broadcom Limited and Avago Technologies General IP (Singapore) Pte. Ltd., PATENT OWNER
In the matter of: U.S. Patent 6,684,060

• Provided expert reports and deposition testimony on invalidity, retained by DirecTV as a technical expert in the case captioned below:

In The United States District Court for the District of Delaware
Civil Action No. 13-432-SLR
Plaintiffs: HBAC MATCHMAKER MEDIA,
INC Defendant : THE DIRECTV GROUP, INC.

• Provided expert report and testified at ITC hearing as technical expert, retained by Samsung in the case captioned below:

The United States International Trade Commission
Investigation No. 337-TA-882
In the Matter of CERTAIN DIGITAL MEDIA DEVICES, INCLUDING TELEVISIONS, BLU-RAY DISC PLAYERS, HOME THEATER SYSTEMS, TABLETS AND MOBILE PHONES, COMPONENTS THEREOF AND ASSOCIATED SOFTWARE

Complainants: Black Hills Media, LLC

Respondents: Samsung Electronics Co. Ltd.

• Provided expert reports and deposition testimony on invalidity and rebuttal to infringement, retained by Comcast et al as a technical expert in the case captioned below:

The United States District Court, Eastern District of Texas, Marshall Division
Civil Action No. 2:11-CV-30 (DF)

In the Matter of United States Patent Number 5,563,883

Plaintiffs: C-Cation Technologies, LLC

Defendants: Comcast Corporation, Charter Communications, Inc., cequel Communications, LLC dba Suddenlink Communications, Cable One, Inc., Almega Cable Inc., Longview Cable Television Company, Inc., and Kilgore Video, Inc

• Provided declaration in support of plaintiff Maxell, LTD's opposition to defendant's motion for judgment on the pleadings under Fed. R. Civ P. 12(c) as a technical expert in the case captioned below:

The United States District Court for the Central District of California
Case No. 2:17-cv-07534-AG-(SSx)

MAXELL, LTD., Plaintiff,
v.
FANDANGO MEDIA, LLC, Defendant.

FANDANGO MEDIA, LLC, Counter-Plaintiff,
v.
MAXELL, LTD., Counter-Defendant.

• Provided expert reports on invalidity and rebuttal to infringement, retained by Apple in the case captioned below:

The United States District Court, Eastern District of Texas, Tyler Division
Civil Action No. 6:10-cv-74-LED-JDL

In the Matter of Certain Digital Set-Top Boxes Components Thereof

Plaintiffs: Smartphone Technologies LLC

Defendants: LG Electronics Inc, LG Electronics USA, Inc, Apple Inc, and AT&T Mobility LLC

• Provided expert report and presented tutorial at ITC hearing as technical expert, retained by Apple in the case captioned below:

The United States International Trade Commission

Investigation No. 337-TA-808

In the Matter of Certain Electronic Devices with Communication Capabilities, Components Thereof, and Related Software

Complainants: HTC Corporation

Respondents: Apple Inc

• Provided expert report and testified at ITC hearing as technical expert, retained by Cablevision in the case captioned below:

The United States International Trade Commission
Investigation No. 337-TA-712
In the Matter of Certain Digital Set-Top Boxes Components Thereof
Complainants: Verizon Services Corporation and Verizon Communications Inc.
Respondents: Cablevision Systems Corporation

• Provided declarations as a technical expert, retained by Comcast in the case captioned below:

The United States District Court for the Eastern District of Viginia, Norfolk Division
Civil Action No. 2:11 CV 103 RAJ/TEM
Plaintiffs: Bear Creek Technologies, Inc
Defendants: Comcast Corporation et al

• Provided declarations and expert report as technical expert, retained by Active Video in the case captioned below:

The United States District Court for The Eastern District of Virginia, Norfolk Division
Civil Action No. 2:10-cv-248 RAJ/FBS
Plaintiffs: Active Video Networks Inc
Defendants: Verizon Communications Inc., Verizon Services Corp.
Verizon Virginia Inc. and Verizon South Inc.

• Provided expert report and deposition testimony as a technical and industry expert, retained by eleven member joint defense group in the case captioned below:

The United States District Court for The District of Maryland, Southern Division
Civil Action No.8:07-cv-03012-AW (D.Md.)
Plaintiffs: Technology Patents LLC
Defendants: Deutsche Telekom AG et al: AT&T Mobility LLC, Microsoft Corporation, Yahoo! Inc., Sprint Nextel Corporation, Motorola, Inc., Palm, Inc., Samsung Electronics Co., LTD., Samsung Telecommunications America LLP, LG Electronics Mobilecomm U.S.A., Inc., Helio, LLC, Clickatell (PTY) LTD., Cellco Partnership (d/b/a Verizon Wireless), and T-Mobile USA, Inc.)

• Provided declarations as a technical expert, retained by BigBand Networks in the case captioned below:

The United States District Court for The District of Delaware
Civil Action No. 07-351 (JJF) Plaintiffs:
BigBand Networks, Inc. Defendants:
Imagine Communications, Inc.

• Provided declarations as a technical expert, retained by Romek Figa in the case captioned below:

The United States District Court for The District of Massachusetts
Civil Action No. 08-cv-10304-NG
Plaintiffs: Romek Figa d/b/a Abraham & Son
Defendants: Apple Inc

• Provided declarations as a technical and industry expert, retained by ODS Technologies in the case captioned below:

The United States District Court Central District of California, Western Division
Civil Action No. CV 07-03265 DDP (RCx)
Plaintiffs: ODS Technologies, L.P., d/b/a TVG Network, and ODS Properties, Inc
Defendants: Magna Entertainment Corporation; HRTV, LLC., ; and Xpressbet, Inc

• Provided expert report and declarations as a technical and industry expert, retained by Motorola in the case captioned below:

The United States District Court for the District of Delaware
Civil Action No. 07-752-GMS
Plaintiffs and Counter-Defendants: Motorola, Inc., ET AL
Defendants and Counter-Plaintiffs: Rembrandt Technologies, LP, ET AL

• Provided expert report and deposition testimony as a technical and industry expert, retained by Amino Communications in the case captioned below:

The United States District Court, Central District of California
Civil Action No. CV-07-1829
Plaintiffs: Amino Communications, LLC
Defendants: Guest-Tek Interactive Entertainment, LTD, Guest-Tek Inc, and DOES 1 through 10

• Provided expert report and deposition testimony as a liability industry expert, retained by JTMD and Ascion in the case captioned below:

The United States District Court, District of Massachusetts
Civil Action No. 07-CV-10207-RGS
Plaintiffs: L& P Property Management Company and Legget & Platt Incorporated
Defendant: JTMD, LLC d/b/a Reverie, and Ascion, LLC

• Provided deposition testimony as an liability expert, retained by National Semiconductor in the case captioned below:

The Superior Court of California, County of Santa Clara
Civil Action No. 1 -02-CV8 1 0872
Plaintiff: Itech Group, Inc.
Defendant: National Semiconductor Corporation

• Provided expert report, deposition, and trial testimony as a liability technical expert, retained by Charter Communications in the case captioned below:

The United States District Court, Eastern District of Texas, Marshall Division
Civil Action No. 2-05-CV-436
Plaintiff: Hybrid Patents Incorporated
Defendant: Charter Communications, Inc.

• Provided expert report and deposition testimony as a liability industry expert, retained by Lutron in the case captioned below:

The United States District Court, District of Utah
Case No. 2:03-CV-00488TC
Plaintiff-Counter defendant: Vantage Controls, Inc.
Defendant-Counter plaintiff: Lutron Electronics Co., Inc.

• Provided expert report and trial and deposition testimony as a liability industry expert, retained by Telewizja Polska in the case captioned below:

The United States District Court, Illinois, Eastern Division
Civil Action No. 02-C-3293
Plaintiffs: Telewizja Polska USA
Defendant: EchoStar SateIlite

• Provided expert report and deposition testimony as a liability technical expert, retained by Broadcom in the case captioned below:

The United States District Court, Eastern District of Texas, Sherman Division
Civil Action No. 4:03CV159
Plaintiffs: Broadcom Corporation
Defendant: Microtune (Texas), L.P.

• Provided expert report, deposition testimony and trial testimony as a damages expert, retained by IPPV and MAAST in the case captioned below:

The United States District Court For the District of Delaware
Civil Action No. 99-577-RRM
Plaintiffs: IPPV Enterprises, LLC and MAAST, Inc.
Defendant: EchoStar Communications Corp

• Provide expert report and deposition testimony as a damages expert, retained by the TVJCOM in the case captioned below:

The United States District Court For the Middle District of Florida.
Case No. 3:OO-CV-1045-5-2 1 A
Plaintiffs: TVJCOM International, Inc.
Defendants: Mediaone of Greater Florida, Inc., Canal Plus Technologies, S.A., Canal Plus U.S. Technologies, Inc., and Societe Europeene de Controle D'Acces

• Provided expert report and deposition testimony as a liability expert, retained by Sony in the case captioned below:

The United States District Court for the Eastern District of New York
Civil Action No. 92-01 28-ARR (Consolidated), Civil Action No. 91 -5056-ARR
Plaintiffs: Loral Fairchild Corporation
Defendants: Sony Company of Japan, LTD.

• Provided expert report and deposition testimony as a liability expert, retained by General Instrument in the case captioned below:

The United States District Court for the Eastern District of Pennsylvania
General Instrument Corporation v. Scientific-Atlanta, Inc.
Civil Action No. 91 -6923
Plaintiffs: General Instrument Corporation
Defendants: Scientific-Atlanta, Inc.