US 20070232358A1

(19) United States

(12) Patent Application Publication

(10) Pub. No.: US 2007/0232358 A1

(43) Pub. Date: Oct. 4, 2007

Sherman

(54) **APPARATUS FOR AND METHOD OF BLUETOOTH AND WIMAX COEXISTENCE IN A MOBILE HANDSET**

(75) Inventor: **Itay Sherman**, Ra,anana (IL)

Correspondence Address:
TEXAS INSTRUMENTS INCORPORATED
P O BOX 655474, M/S 3999
DALLAS, TX 75265

(73) Assignee: **Texas Instruments Incorporated**

(21) Appl. No.: **11/695,059**

(22) Filed: **Apr. 2, 2007**

Related U.S. Application Data

(60) Provisional application No. 60/788,921, filed on Apr. 4, 2006.

Publication Classification

(51) **Int. Cl.**
H04B 1/38 (2006.01)

(52) **U.S. Cl.** **455/560**

(57) **ABSTRACT**

A novel and useful apparatus for and method of Bluetooth and WiMAX coexistence. The invention provides a system approach to achieving coexistence between Bluetooth and WiMAX transceivers collocated in a mobile terminal. The coexistence mechanism of the present invention is particularly suited to operation of WiMAX in the 2.3 GHz and 2.5 GHz frequency bands. In operation, the coexistence mechanism of the present invention utilizes multiple algorithms depending on the capabilities of the Bluetooth peer and the power save support level of the WiMAX base station. In the example embodiment presented herein, the coexistence mechanism is implemented in the MAC layer of the Bluetooth and WiMAX radio modules.

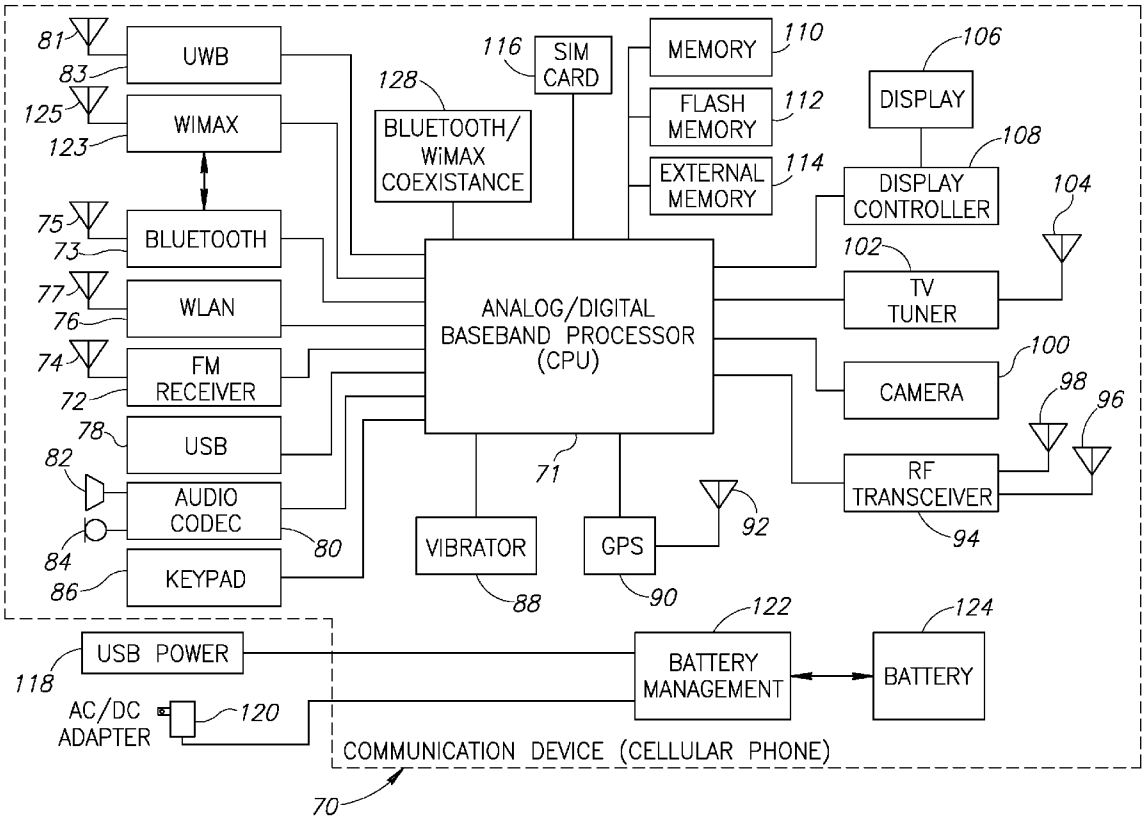

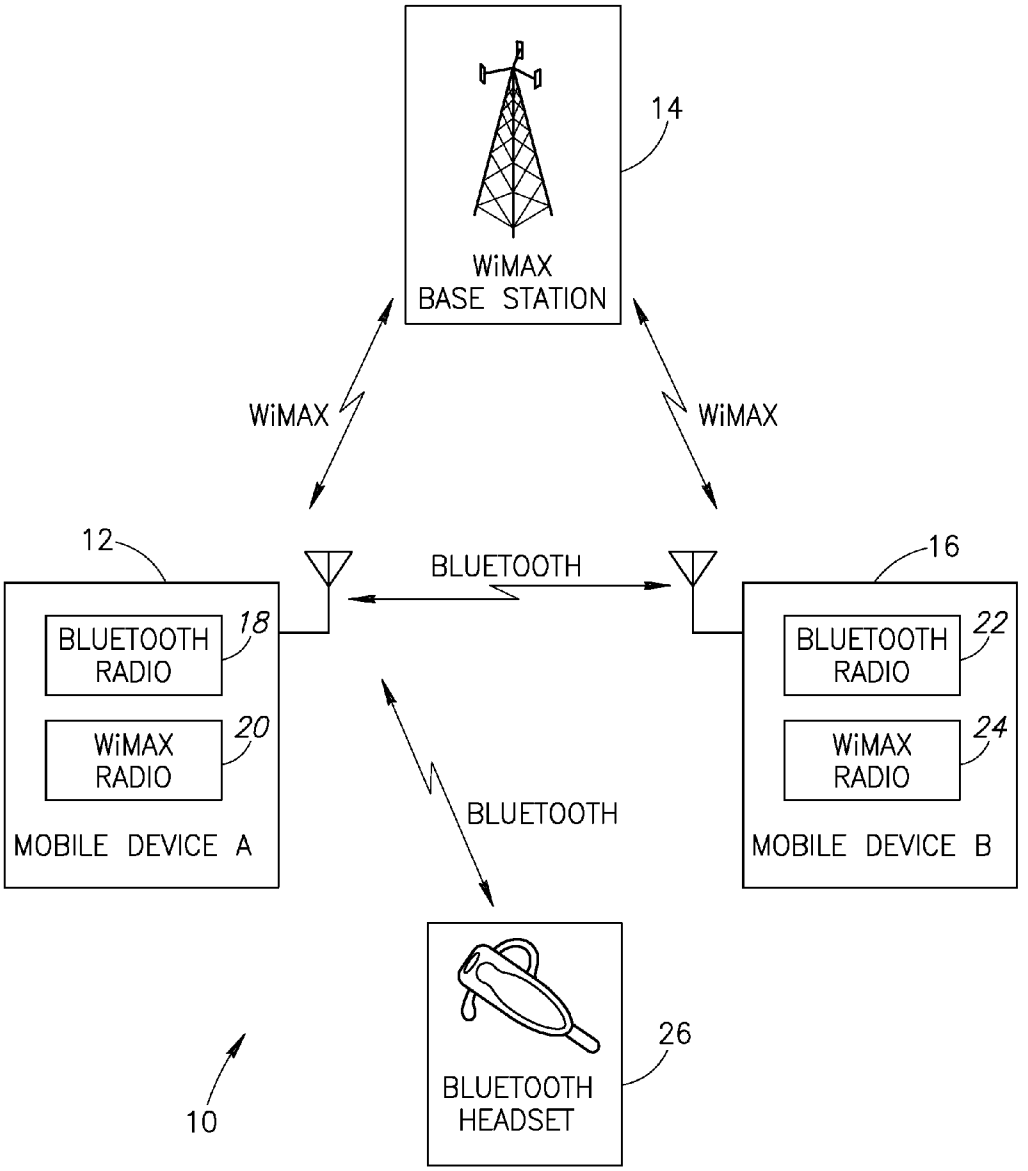

FIG.1
PRIOR ART

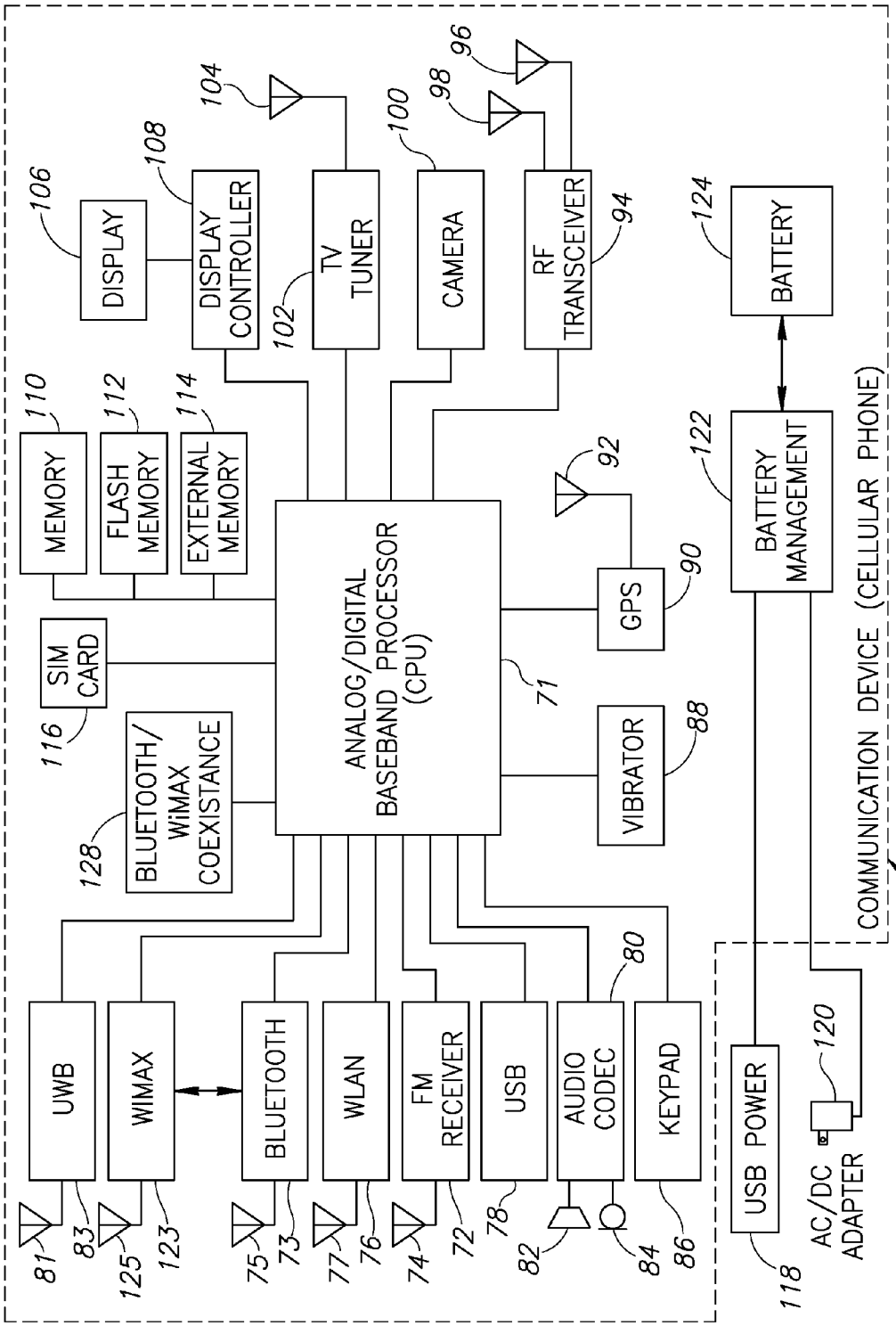
DISPLAY
DISPLAY CONTROLLER
TV TUNER
CAMERA
RF TRANSCEIVER
BATTERY
MEMORY
FLASH MEMORY
EXTERNAL MEMORY
BATTERY MANAGEMENT
SIM CARD
ANALOG/DIGITAL BASEBAND PROCESSOR (CPU)
GPS
VIBRATOR
BLUETOOTH/ WiMAX COEXISTANCE
COMMUNICATION DEVICE (CELLULAR PHONE)
UWB
WIMAX
BLUETOOTH
WLAN
FM RECEIVER
USB
AUDIO CODEC
KEYPAD
USB POWER
AC/DC ADAPTER
70
71
72
73
74
75
76
77
78
80
81
82
83
84
86
88
90
92
94
96
98
100
102
104
106
108
110
112
114
116
118
120
122
123
124
125
128

FIG.2

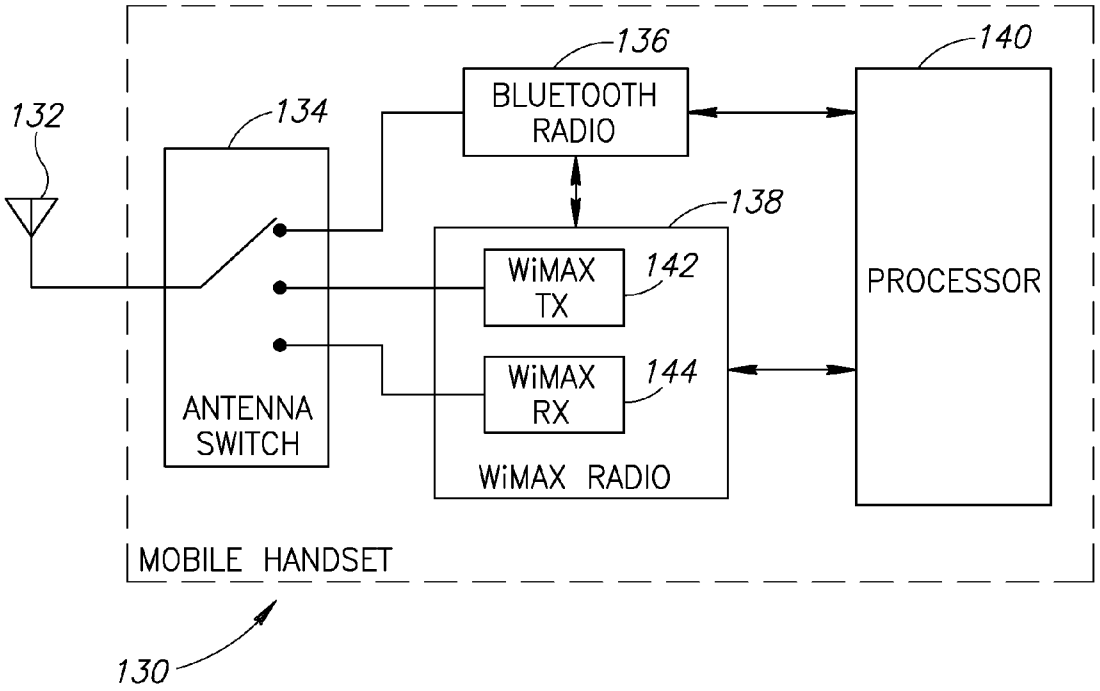
136
140
132
134
BLUETOOTH RADIO
138
WiMAX TX
142
PROCESSOR
WiMAX RX
144
ANTENNA SWITCH
WiMAX RADIO
MOBILE HANDSET
130

FIG.3

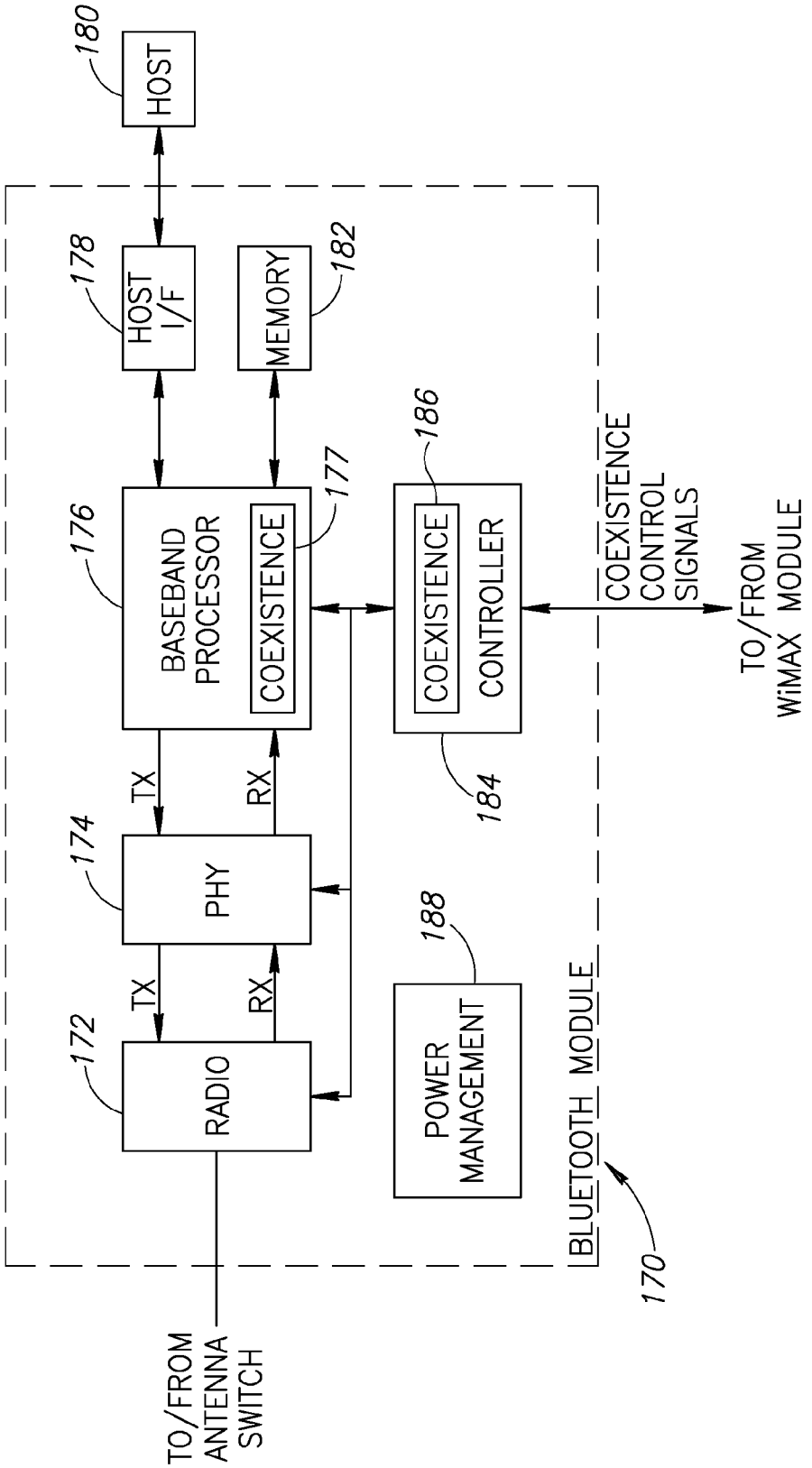
180
HOST
178
HOST I/F
MEMORY
182
176
BASEBAND PROCESSOR
COEXISTENCE
177
186
COEXISTENCE
CONTROLLER
184
COEXISTENCE CONTROL SIGNALS
TO/FROM WiMAX MODULE
TX
RX
174
PHY
188
POWER MANAGEMENT
TX
RX
172
RADIO
BLUETOOTH MODULE
170
TO/FROM ANTENNA SWITCH

FIG. 4

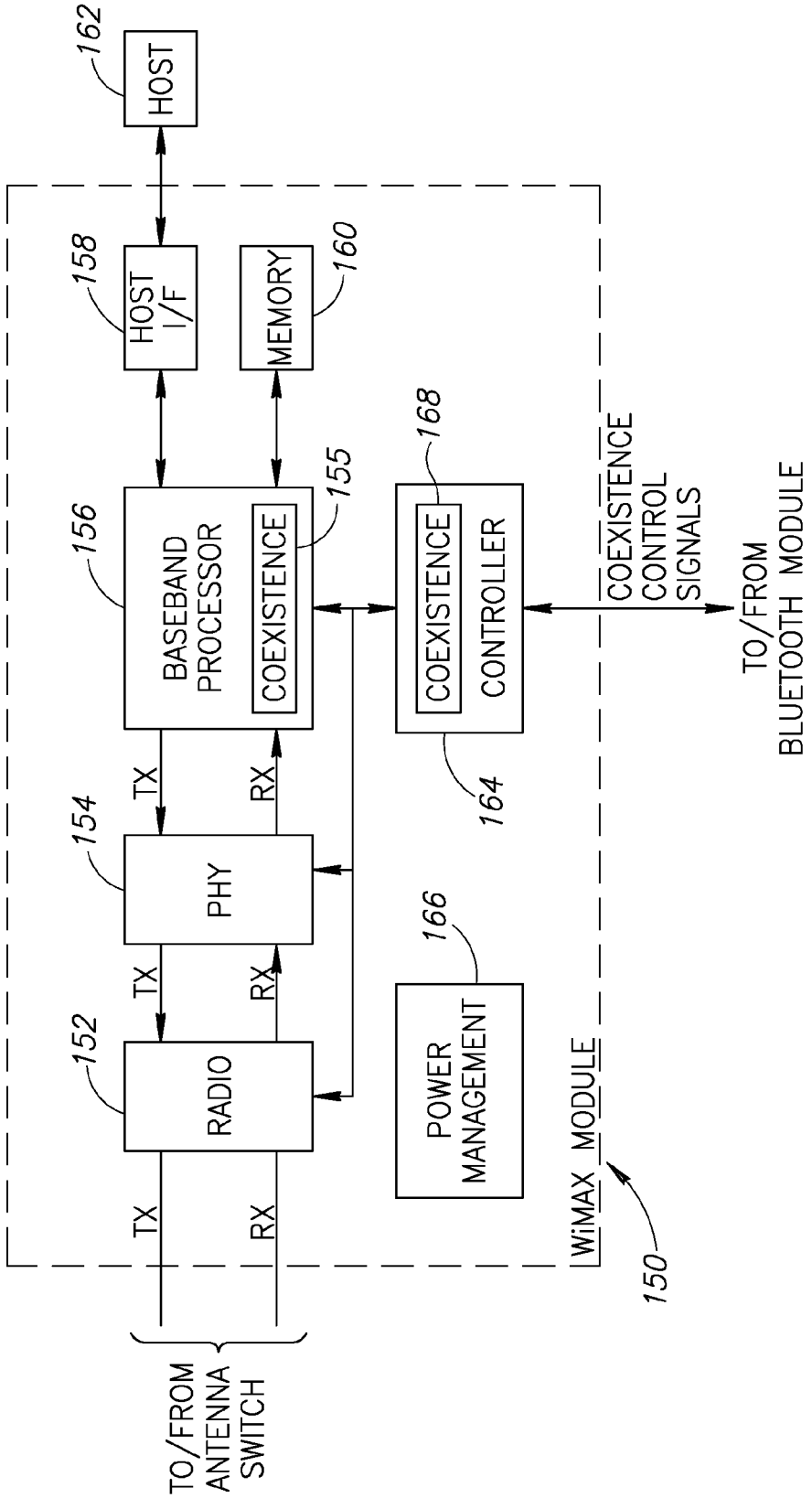
162
HOST
158
HOST I/F
MEMORY
160
156
BASEBAND PROCESSOR
COEXISTENCE
155
168
COEXISTENCE
CONTROLLER
164
COEXISTENCE CONTROL SIGNALS
TO/FROM BLUETOOTH MODULE
TX
RX
154
PHY
TX
RX
152
RADIO
166
POWER MANAGEMENT
TX
RX
WiMAX MODULE
150
TO/FROM ANTENNA SWITCH

FIG.5

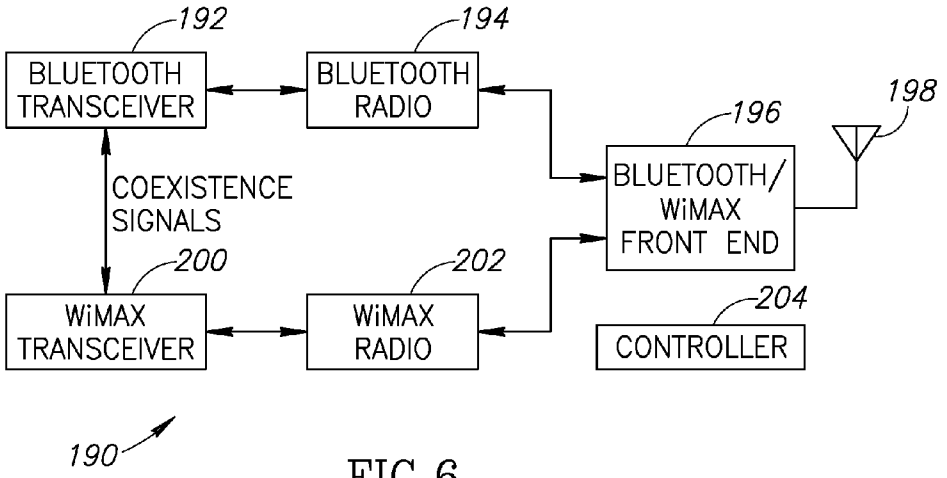
192
194
BLUETOOTH TRANSCEIVER
BLUETOOTH RADIO
196
198
BLUETOOTH/ WiMAX FRONT END
COEXISTENCE SIGNALS
200
202
204
WiMAX TRANSCEIVER
WiMAX RADIO
CONTROLLER
190

FIG.6

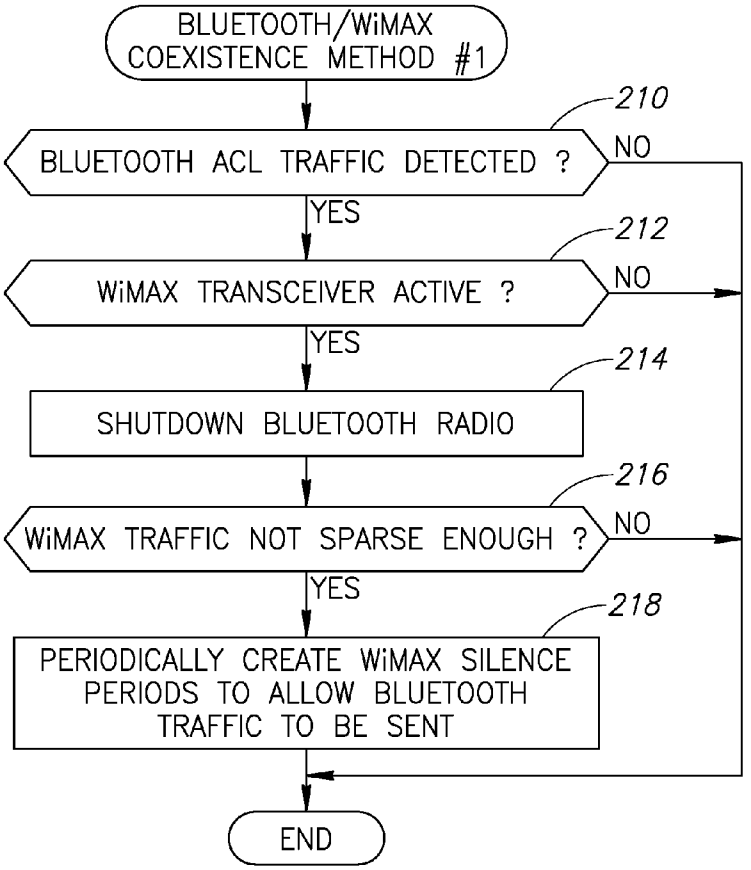
BLUETOOTH/WiMAX COEXISTENCE METHOD #1
210
BLUETOOTH ACL TRAFFIC DETECTED ?
NO
YES
212
WiMAX TRANSCEIVER ACTIVE ?
NO
YES
214
SHUTDOWN BLUETOOTH RADIO
216
WiMAX TRAFFIC NOT SPARSE ENOUGH ?
NO
YES
218
PERIODICALLY CREATE WiMAX SILENCE PERIODS TO ALLOW BLUETOOTH TRAFFIC TO BE SENT
END

FIG.7

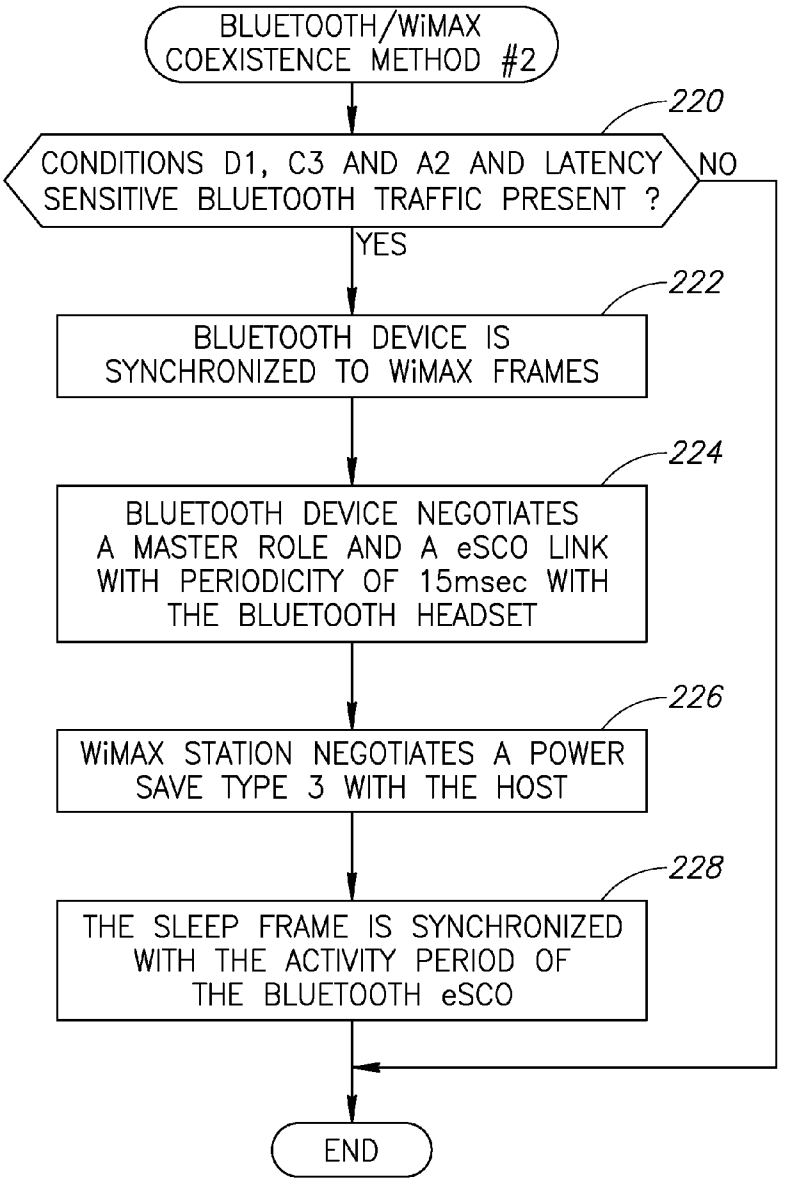
BLUETOOTH/WiMAX COEXISTENCE METHOD #2
220
CONDITIONS D1, C3 AND A2 AND LATENCY SENSITIVE BLUETOOTH TRAFFIC PRESENT ?
NO
YES
222
BLUETOOTH DEVICE IS SYNCHRONIZED TO WiMAX FRAMES
224
BLUETOOTH DEVICE NEGOTIATES A MASTER ROLE AND A eSCO LINK WITH PERIODICITY OF 15msec WITH THE BLUETOOTH HEADSET
226
WiMAX STATION NEGOTIATES A POWER SAVE TYPE 3 WITH THE HOST
228
THE SLEEP FRAME IS SYNCHRONIZED WITH THE ACTIVITY PERIOD OF THE BLUETOOTH eSCO
END

FIG.8

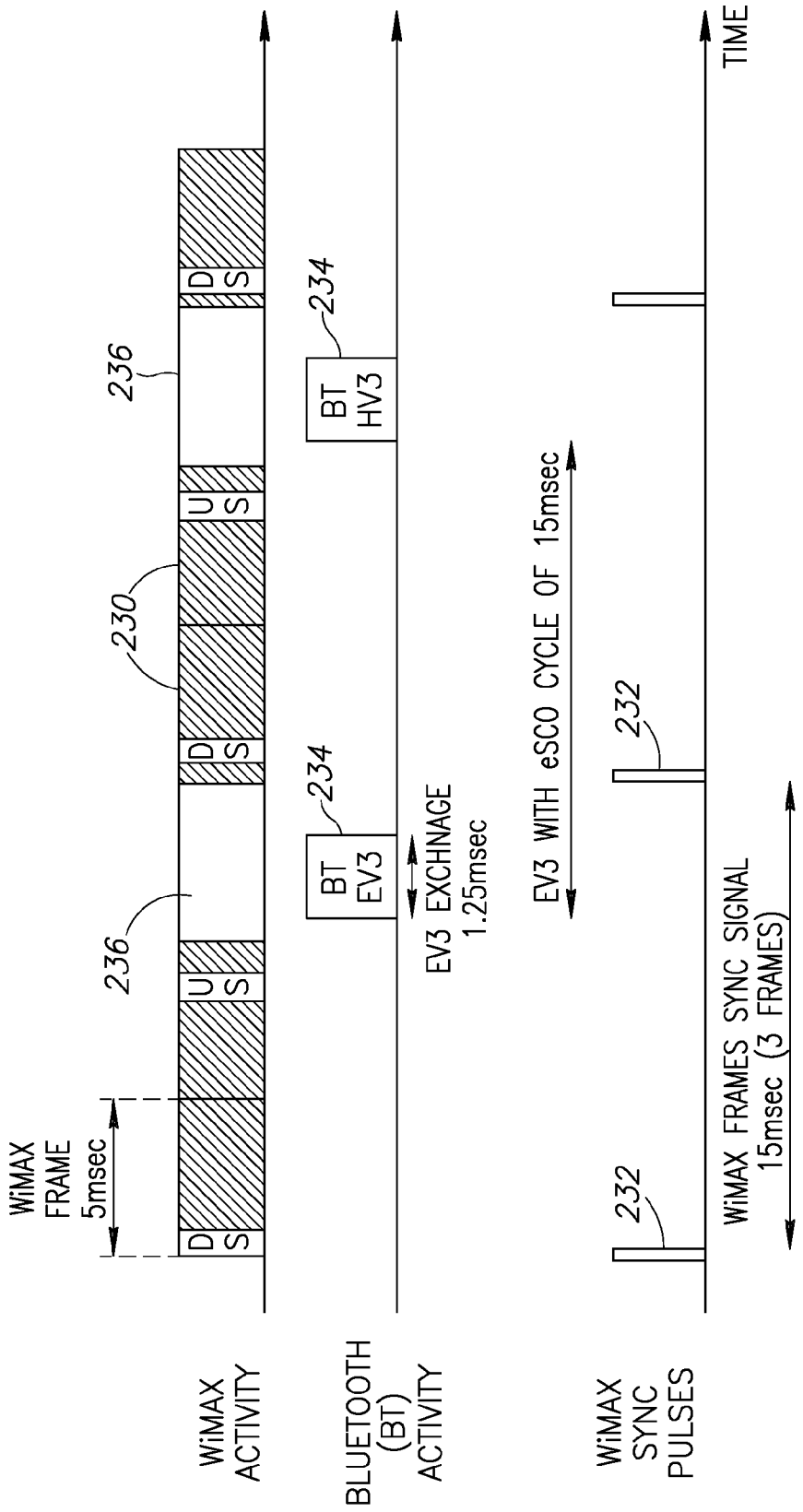
WiMAX FRAME 5msec
D
S
U
S
D
S
U
S
D
S
236
230
236
234
BT EV3
234
BT HV3
EV3 EXCHNAGE 1.25msec
EV3 WITH eSCO CYCLE OF 15msec
232
232
WiMAX FRAMES SYNC SIGNAL 15msec (3 FRAMES)
TIME
WiMAX ACTIVITY
BLUETOOTH (BT) ACTIVITY
WiMAX SYNC PULSES

FIG. 9

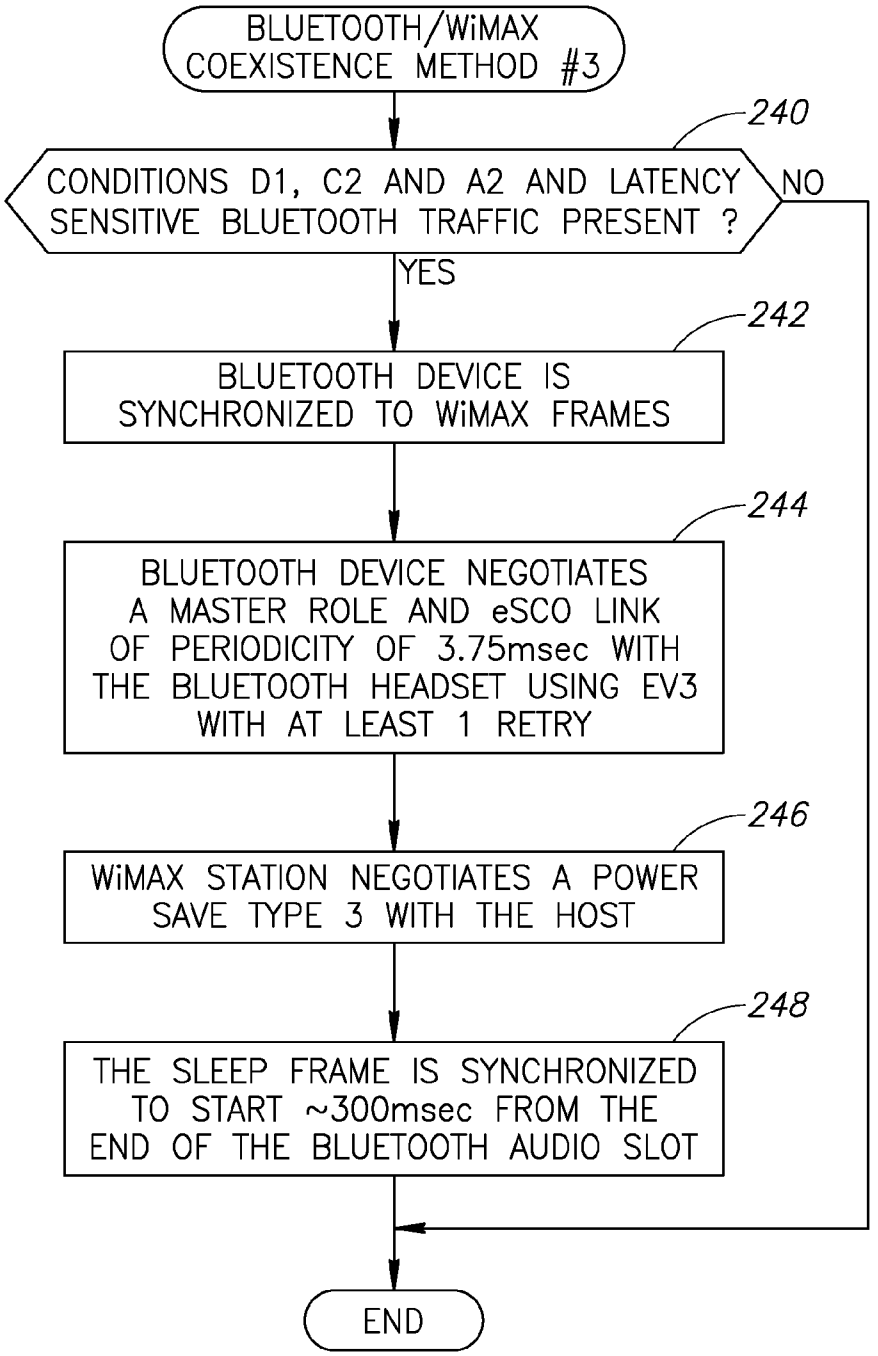
BLUETOOTH/WiMAX COEXISTENCE METHOD #3
240
CONDITIONS D1, C2 AND A2 AND LATENCY SENSITIVE BLUETOOTH TRAFFIC PRESENT ?
NO
YES
242
BLUETOOTH DEVICE IS SYNCHRONIZED TO WiMAX FRAMES
244
BLUETOOTH DEVICE NEGOTIATES A MASTER ROLE AND eSCO LINK OF PERIODICITY OF 3.75msec WITH THE BLUETOOTH HEADSET USING EV3 WITH AT LEAST 1 RETRY
246
WiMAX STATION NEGOTIATES A POWER SAVE TYPE 3 WITH THE HOST
248
THE SLEEP FRAME IS SYNCHRONIZED TO START ~300msec FROM THE END OF THE BLUETOOTH AUDIO SLOT
END

FIG.10

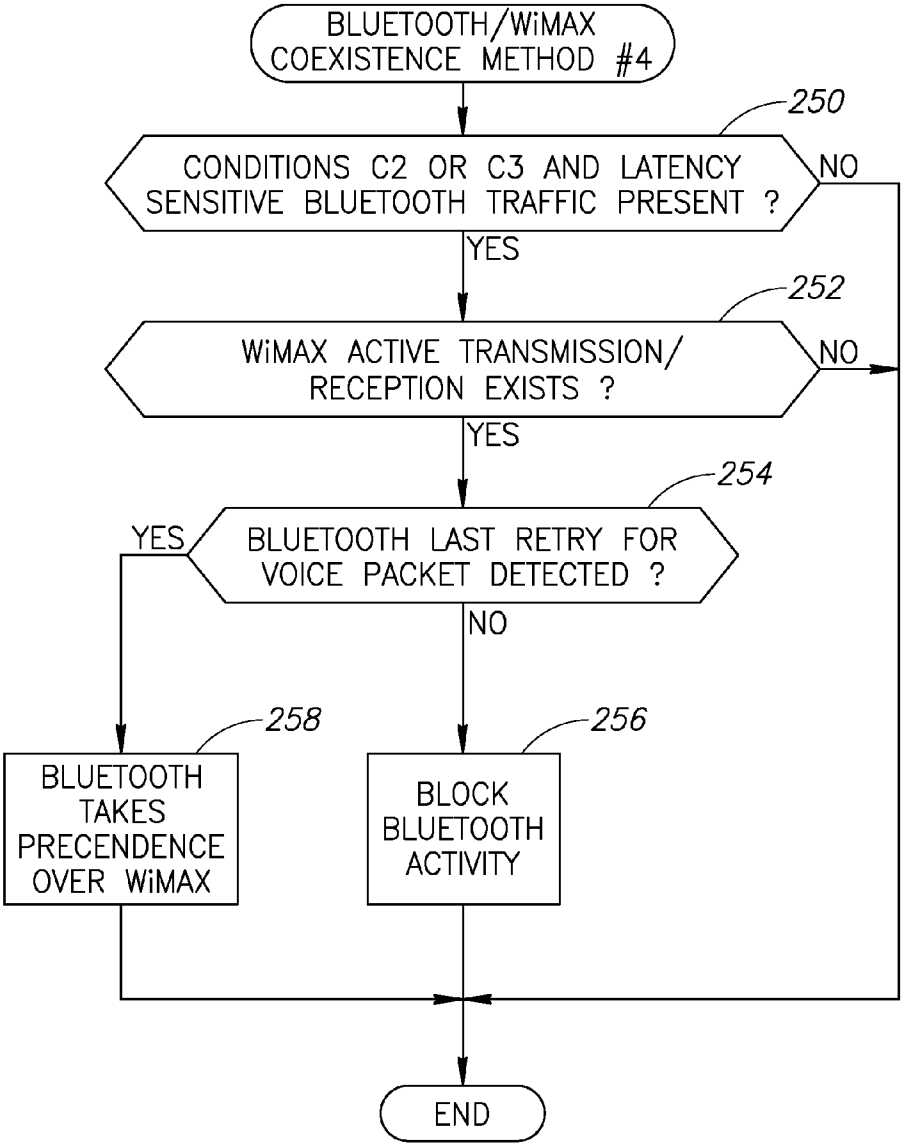
BLUETOOTH/WiMAX COEXISTENCE METHOD #4
250
CONDITIONS C2 OR C3 AND LATENCY SENSITIVE BLUETOOTH TRAFFIC PRESENT ?
NO
YES
252
WiMAX ACTIVE TRANSMISSION/ RECEPTION EXISTS ?
NO
YES
254
YES
BLUETOOTH LAST RETRY FOR VOICE PACKET DETECTED ?
NO
258
256
BLUETOOTH TAKES PRECENDENCE OVER WiMAX
BLOCK BLUETOOTH ACTIVITY
END

FIG.11

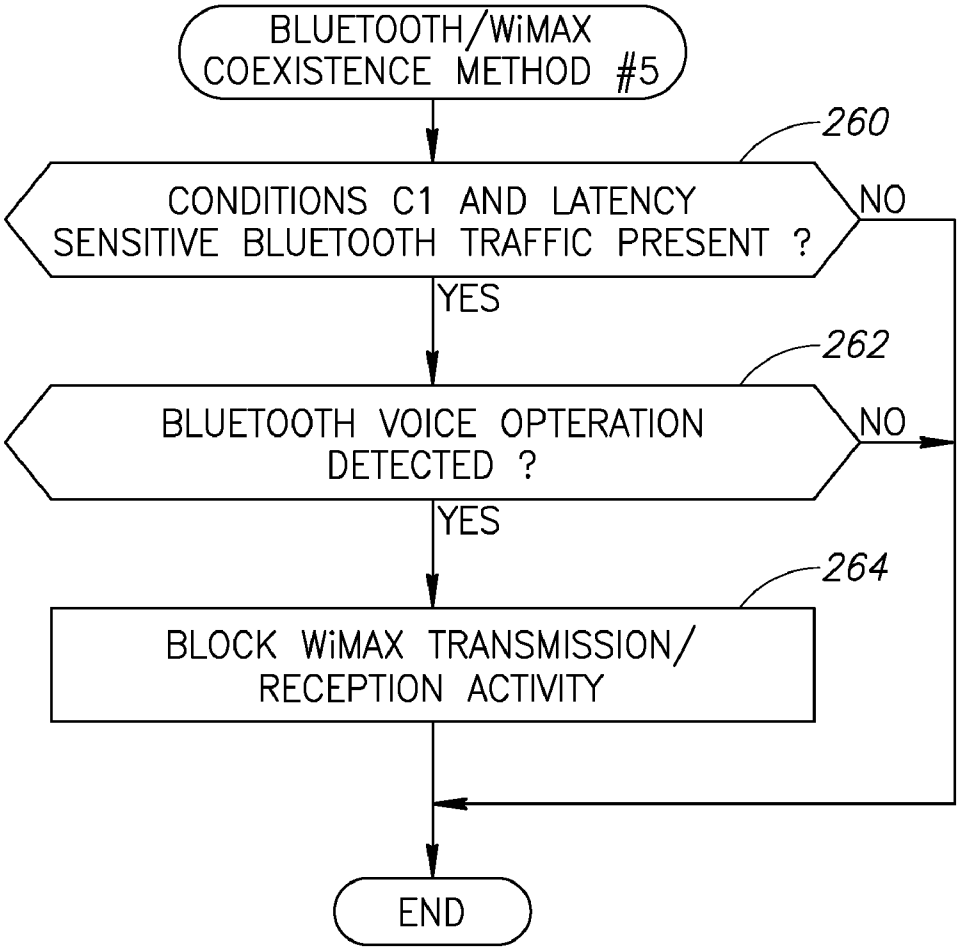
BLUETOOTH/WiMAX
COEXISTENCE METHOD #5
260
CONDITIONS C1 AND LATENCY
SENSITIVE BLUETOOTH TRAFFIC PRESENT ?
NO
YES
262
BLUETOOTH VOICE OPTERATION
DETECTED ?
NO
YES
264
BLOCK WiMAX TRANSMISSION/
RECEPTION ACTIVITY
END

FIG.12

APPARATUS FOR AND METHOD OF BLUETOOTH AND WIMAX COEXISTENCE IN A MOBILE HANDSET

REFERENCE TO PRIORITY APPLICATION

[0001] This application claims priority to U.S. Provisional Application Ser. No. 60/788,921, filed Apr. 4, 2006, entitled "Attached BT headset to mobile handset terminal", incorporated herein by reference in its entirety.

FIELD OF THE INVENTION

[0002] The present invention relates to the field of data communications and more particularly relates to an apparatus for and method of enabling Bluetooth and WiMAX radios to coexist in the same mobile handset terminal.

BACKGROUND OF THE INVENTION

[0003] Currently there are numerous consumer electronics communications devices such as portable multimedia players, add-ons for portable multimedia players, cellular telephones, personal digital assistants (PDAs), etc. that support a primary communications connection in addition to one or more secondary communications connections. Considering communication devices such as cellular phones, for example, an increasing number of cellular phones today support both the basic primary cellular communications connection as well as support one or more secondary connections such as Bluetooth and Wireless Local Area Network (WLAN) which permit direct connection between cellular phones. In addition to cellular, WiMAX enabled mobile devices also incorporate one or more secondary communications connections. Other short distance wireless technologies such as ultra wideband (UWB) and others are to be incorporated into mobile devices in the next several years.

[0004] Bluetooth is an industrial specification for wireless personal area networks (PAN). Bluetooth provides a way to connect and exchange information between devices such as mobile phones, printers, PCs, laptops, and other digital equipment, over a secure, globally unlicensed short-range radio frequency (RF).

[0005] Bluetooth is a radio standard and communications protocol primarily designed for low power consumption, with a short range based on low-cost transceiver integrated circuits (ICs) in each device. Bluetooth networks enable these devices to communicate with each other when they are in range.

[0006] Bluetooth capability is increasingly built-in to many new products such as phones, printers, modems and headsets. Bluetooth is appropriate for situations when two or more devices are in proximity to each other and do not require high bandwidth. Bluetooth is most commonly used with phones and hand-held computing devices, either using a Bluetooth headset or transferring files from phones/PDAs to computers.

[0007] Bluetooth also simplified the discovery and setup of services, in contrast to WLAN which is more analogous to a traditional Ethernet network and requires configuration to set up shared resources, transmit files, set up audio links (e.g., headsets and hands-free devices), whereas Bluetooth devices advertise all the services they provide; thus making the service more accessible, without the need to worry about network addresses, permissions, etc.

[0008] The Worldwide Interoperability for Microwave Access (WiMAX) is defined by the WiMAX Forum and is embodied in the IEEE **802.16** standard, officially known as Wireless Metropolitan Area Network (WMAN). Many companies are currently considering using WiMAX for "last mile" connectivity at high data rates. In areas that do not have pre-existing physical cable or telephone networks, WiMAX is a viable alternative for broadband access.

[0009] WiMAX is a long range system that uses licensed spectrum to deliver a point-to-point connection to the Internet from an ISP to an end user. Different 802.16 standards provide different types of access, from mobile (i.e. access via a cell phone) to fixed which is an alternative to wired access, where the end user's wireless termination point is fixed in location.

[0010] WiMAX is a term coined to describe standard, interoperable implementations of IEEE 802.16 wireless networks. The 802.16 MAC uses a scheduling algorithm for which the subscriber station need compete once (for initial entry into the network). After that it is allocated an access slot by the base station. The time slot can enlarge and contract, but remains assigned to the subscriber station which means that other subscribers cannot use it. The 802.16 scheduling algorithm is stable under overload and oversubscription. It is also more bandwidth efficient. In addition, the scheduling algorithm allows the base station to control QoS parameters by balancing the time-slot assignments among the application needs of the subscriber stations.

[0011] Regarding the PHY layer, the IEEE 802.16e standard uses scalable orthogonal frequency-division multiplexing (OFDM) and also provides for Multiple Antenna Support through multiple-input, multiple-output. This brings potential benefits in terms of coverage, self installation, power consumption, frequency re-use and bandwidth efficiency. The 802.16e standard also adds a capability for full mobility support.

[0012] Regarding spectrum allocation, the 802.16 specification applies across a wide swath of the RF spectrum. There is no uniform global licensed spectrum for WiMAX. In the United States, the biggest segment available is at approximately 2.5 GHz, and is already assigned to carriers (Sprint Nextel and Clearwire). Elsewhere in the world, the most likely bands used will be around 3.5 GHz, 2.3/2.5 GHz, or 5 GHz, with 2.3/2.5 GHz probably being most important in Asia. In addition, several companies have announced plans to utilize the WiMAX standard in the 1.7/2.1 GHz spectrum band recently auctioned by the FCC, for deployment of Advanced Wireless Services (AWS).

[0013] The actual radio bandwidth of spectrum allocations is also likely to vary. Typical allocations are likely to provide channels of 5 MHz or 7 MHz. In principle, the larger the bandwidth allocation of the spectrum, the higher the bandwidth that WiMAX can support for user traffic.

[0014] The deployment of WiMAX in the United States will be in the 2.5 GHz band. Bluetooth, however, uses the 2.4 GHz band for communications. A problem arises, however, in that the small frequency separation between these two bands does not allow for any meaningful filtering. Simple RF filtering and device blocking performance is not sufficient to provide the required conditions to allow simultaneous operation of these two technologies.

[0015] A network diagram illustrating an example prior art network incorporating Bluetooth and WiMAX radios is shown in FIG. **1**. The example wireless scenario, generally

referenced **10**, comprises two mobile devices, namely mobile device A **12** and mobile device B **16**, a WiMAX base station **14** and Bluetooth headset **26**. Mobile device A comprises a Bluetooth radio **18** as well as a WiMAX radio **20**. Similarly, mobile device B comprises a Bluetooth radio **22** as well as a WiMAX radio **24**. It is possible that in operation the Bluetooth and WiMAX devices communicate at the same time. Thus, the Bluetooth radio **18** in mobile device A may communicate either with the Bluetooth radio **22** in mobile device B or the Bluetooth headset **26**. At the same time, the WiMAX radios **20**, **24** communicate with the WiMAX base station **14**.

[0016] Antenna isolation between the two radios is not likely to provide a good solution. Assuming separate antennas are used, antenna isolation is limited to approximately 15 dB. If both Bluetooth and WiMAX are included on the same handset or other device, their transmissions in effect create blocking and/or degraded sensitivity for the other transceivers receive chain while the other is transmitting. WiMAX transmission is +24 dBm with peaks of +31 dBm. Considering an antenna isolation of 15 dBm, this yields +9 dBm to +16 dBm on the Bluetooth terminal. Such a high level of input power could damage the Bluetooth transceiver.

[0017] It is thus desirable to have a mechanism that is capable of enabling a Bluetooth and WiMAX radio to coexist in the same mobile device. The coexistence mechanism should not cause performance degradations in either the Bluetooth or WiMAX radios and should have a minimal impact on cost and required resources in its implementation.

SUMMARY OF THE INVENTION

[0018] The present invention is a novel and useful apparatus for and method of Bluetooth and WiMAX coexistence. The invention provides a system approach to achieving coexistence between Bluetooth and WiMAX transceivers collocated in a mobile terminal. The coexistence mechanism of the present invention is particularly suited to operation of WiMAX in the 2.3 GHz and 2.5 GHz frequency bands where the performance of simple RF filtering and device blocking are not sufficient to allow simultaneous operation of the two technologies. This occurs when the receive chain of one of the transceivers is blocked or subject to degraded sensitivity while the other transceiver is transmitting.

[0019] In operation, the coexistence mechanism of the present invention utilizes multiple algorithms depending on the capabilities of the Bluetooth peer and the power save support level of the WiMAX base station. In the example embodiment presented herein, the coexistence mechanism is implemented in the MAC layer of the Bluetooth and WiMAX radio modules.

[0020] The Bluetooth transceiver time base is synchronized to WiMAX frames. Bluetooth ACL transmissions are preempted whenever the WiMAX radio is operating in either receive or transmit. When a Bluetooth eSCO link is set up, the WiMAX radio switches to power save mode and the listen and sleep periods are adjusted accordingly. Bluetooth transmission slots are initially scheduled such that they do not overlap WiMAX listen windows. Synchronization between the Bluetooth and WiMAX radio modules is maintained by applying corrections to the Bluetooth clock based on the start of frames indication signals generated by the WiMAX transceiver.

[0021] Although the Bluetooth/WiMAX coexistence mechanism of the present invention can be incorporated in numerous types of communication devices such a multimedia player, cellular phone, PDA, etc., it is described in the context of a mobile device. It is appreciated, however, that the invention is not limited to the example applications presented, whereas one skilled in the art can apply the principles of the invention to other communication systems as well without departing from the scope of the invention.

[0022] The Bluetooth/WiMAX coexistence mechanism has several advantages including the following: (1) allows for collocated operation of a Bluetooth transceiver at 2.3 GHz and a WiMAX transceiver at 2.5 GHz; (2) the mechanism of the present invention is operative to support both data and voice traffic operations on both Bluetooth and WiMAX transceivers; and (3) use of the mechanism of the present invention does not degrade the performance of WiMAX nor waste operator bandwidth.

[0023] Note that some aspects of the invention described herein may be constructed as software objects that are executed in embedded devices as firmware, software objects that are executed as part of a software application on either an embedded or non-embedded computer system such as a digital signal processor (DSP), microcomputer, minicomputer, microprocessor, etc. running a real-time operating system such as WinCE, Symbian, OSE, Embedded LINUX, etc. or non-real time operating system such as Windows, UNIX, LINUX, etc., or as soft core realized HDL circuits embodied in an Application. Specific Integrated Circuit (ASIC) or Field Programmable Gate Array (FPGA), or as functionally equivalent discrete hardware components.

[0024] There is thus provided in accordance with the present invention, a method of coexistence between a Bluetooth transceiver and a WiMAX transceiver collocated in a mobile device, the method comprising the steps of generating a signal indicating active reception or transmission of the WiMAX transceiver and receiving the signal by the Bluetooth transceiver and blocking transmit and receive activity in the Bluetooth transceiver in response thereto.

[0025] There is also provided in accordance with the present invention, a method of coexistence between a Bluetooth transceiver and a WiMAX transceiver collocated in a mobile device, the method comprising the steps of synchronizing the Bluetooth transceiver to WiMAX frames, WiMAX switching to power save mode in response to Bluetooth eSCO link setup, configuring WiMAX listen period and sleep window as a multiple of a basic eSCO period, the Bluetooth transceiver attempting to establish eSCO periods as a multiple of WiMAX frame size and if base station capabilities do not permit power save and WiMAX frame size, selecting a listen period and sleep window such that at least one retransmission attempt for each Bluetooth eSCO burst does not overlap the WiMAX listen window.

[0026] There is further provided in accordance with the present invention, a method of coexistence between a Bluetooth transceiver and a WiMAX transceiver collocated in a mobile device, the method comprising the steps of blocking the Bluetooth transceiver when WiMAX transmit/receive activity is detected and permitting an exception for Bluetooth last retry latency sensitive packet transmission which takes precedence over WiMAX transmit/receive activity.

[0027] There is also provided in accordance with the present invention, a method of coexistence between a Blue-

tooth transceiver and a WiMAX transceiver collocated in a mobile device, the method comprising the steps of detecting intent of the Bluetooth transceiver to transmit latency sensitive services traffic and if the Bluetooth transceiver does not support transmission retries, blocking WiMAX transceiver transmit/receive activity during transmission of latency sensitive services traffic by the Bluetooth transceiver.

[0028] There is further provided in accordance with the present invention, a mobile communications device comprising a Bluetooth transceiver and associated Bluetooth media access control (MAC), a WiMAX transceiver and associated WiMAX MAC, coexistence means coupled to the Bluetooth transceiver and the WiMAX transceiver, the coexistence means operative to, synchronize the time base of the Bluetooth transceiver to WiMAX frames, block Bluetooth ACL transmissions during WiMAX transmit/receive activity, switch the WiMAX transceiver to power save mode in response to Bluetooth SCO link setup and to select a listen period and sleep window to be a multiple a basic SCO period, schedule Bluetooth SCO slots such that they do not overlap with WiMAX listen windows and a processor operative to send and receive data to and from the Bluetooth transceiver and the WiMAX transceiver.

BRIEF DESCRIPTION OF THE DRAWINGS

[0029] The invention is herein described, by way of example only, with reference to the accompanying drawings, wherein:

[0030] FIG. **1** is a network diagram illustrating an example prior art network incorporating Bluetooth and WiMAX radios;

[0031] FIG. **2** is a block diagram illustrating an example communication device in more detail incorporating the Bluetooth/WiMAX coexistence mechanism of the present invention;

[0032] FIG. **3** is a simplified block diagram illustrating an example mobile handset incorporating the Bluetooth/WiMAX coexistence mechanism of the present invention;

[0033] FIG. **4** is a block diagram illustrating an example Bluetooth module adapted for use with the Bluetooth/WiMAX coexistence mechanism of the present invention;

[0034] FIG. **5** is a block diagram illustrating an example WiMAX module adapted for use with the Bluetooth/WiMAX coexistence mechanism of the present invention;

[0035] FIG. **6** is a simplified block diagram illustrating the communication of control signals between Bluetooth and WiMAX radios;

[0036] FIG. **7** is a flow diagram illustrating a first Bluetooth/WiMAX coexistence method of the invention;

[0037] FIG. **8** is a flow diagram illustrating a second Bluetooth/WiMAX coexistence method of the invention;

[0038] FIG. **9** is a diagram illustrating timing relationship between Bluetooth and WiMAX activity;

[0039] FIG. **10** is a flow diagram illustrating a third Bluetooth/WiMAX coexistence method of the invention;

[0040] FIG. **11** is a flow diagram illustrating a fourth Bluetooth/WiMAX coexistence method of the invention; and

[0041] FIG. **12** is a flow diagram illustrating a fifth Bluetooth/WiMAX coexistence method of the invention.

DETAILED DESCRIPTION OF THE INVENTION

Notation Used Throughout

[0042] The following notation is used throughout this document.

Term	Definition
AC	Alternating Current
ACL	Asynchronous Connectionless Link
ADC	Analog to Digital Converter
ASIC	Application Specific Integrated Circuit
AVI	Audio Video Interleave
AWS	Advanced Wireless Services
BMP	Windows Bitmap
CPU	Central Processing Unit
DAC	Digital to Analog Converter
DC	Direct Current
DSP	Digital Signal Processor
EDR	Enhanced Data Rate
EEPROM	Electrically Erasable Programmable Read Only Memory
EPROM	Erasable Programmable Read Only Memory
eSCO	Extended Synchronous Connection-Oriented
FCC	Federal Communications Commission
FM	Frequency Modulation
FPGA	Field Programmable Gate Array
HDL	Hardware Description Language
HFP	Hands Free Protocol
I/F	Interface
IC	Integrated Circuit
IEEE	Institute of Electrical and Electronics Engineers
JPG	Joint Photographic Experts Group
LAN	Local Area Network
MAC	Media Access Control
MAP	Media Access Protocol
MP3	MPEG-1 Audio Layer 3
MPG	Moving Picture Experts Group
OFDM	Orthogonal Frequency Division Multiplexing
PAN	Personal Area Network
PC	Personal Computer
PCI	Personal Computer Interconnect
PDA	Portable Digital Assistant
QoS	Quality of Service
RAM	Random Access Memory
RF	Radio Frequency
ROM	Read Only Memory
SCO	Synchronous Connection-Oriented
SIM	Subscriber Identity Module
TDD	Time Division Duplex
UGS	Unsolicited Grant Services
USB	Universal Serial Bus
UWB	Ultra Wideband
WiFi	Wireless Fidelity
WiMAX	Worldwide Interoperability for Microwave Access
WiMedia	Radio platform for UWB
WLAN	Wireless Local Area Network
WMA	Windows Media Audio
WMAN	Wireless Metropolitan Area Network
WMV	Windows Media Video

DETAILED DESCRIPTION OF THE INVENTION

[0043] The present invention is a novel and useful apparatus for and method of Bluetooth and WiMAX coexistence. The invention provides a system approach to achieving coexistence between Bluetooth and WiMAX transceivers

collocated in a mobile terminal. The coexistence mechanism of the present invention is particularly suited to operation of WiMAX in the 2.3 GHz and 2.5 GHz frequency bands where the performance of simple RF filtering and device blocking are not sufficient to allow simultaneous operation of the two technologies. This occurs when the receive chain of one of the transceivers is blocked or subject to degraded sensitivity while the other transceiver is transmitting.

[0044] Although the Bluetooth/WiMAX coexistence mechanism of the present invention can be incorporated in numerous types of communication devices such a multimedia player, cellular phone, PDA, etc., it is described in the context of a mobile device. It is appreciated, however, that the invention is not limited to the example applications presented, whereas one skilled in the art can apply the principles of the invention to other communication systems as well without departing from the scope of the invention.

[0045] Note that throughout this document, the term communications device is defined as any apparatus or mechanism adapted to transmit, receive or transmit and receive data through a medium. The term communications transceiver or communications device is defined as any apparatus or mechanism adapted to transmit and receive data through a medium. The communications device or communications transceiver may be adapted to communicate over any suitable medium, including wireless or wired media. Examples of wireless media include RF, infrared, optical, microwave, UWB, Bluetooth, WiMAX, WiMedia, WiFi, or any other broadband medium, etc. Examples of wired media include twisted pair, coaxial, optical fiber, any wired interface (e.g., USB, Firewire, Ethernet, etc.). The term Ethernet network is defined as a network compatible with any of the IEEE 802.3 Ethernet standards, including but not limited to 10 Base-T, 100 Base-T or 1000 Base-T over shielded or unshielded twisted pair wiring. The terms communications channel, link and cable are used interchangeably.

[0046] The term multimedia player or device is defined as any apparatus having a display screen and user input means that is capable of playing audio (e.g., MP3, WMA, etc.), video (AVI, MPG, WMV, etc.) and/or pictures (JPG, BMP, etc.). The user input means is typically formed of one or more manually operated switches, buttons, wheels or other user input means. Examples of multimedia devices include pocket sized personal digital assistants (PDAs), personal media player/recorders, cellular telephones, handheld devices, and the like.

[0047] Some portions of the detailed descriptions which follow are presented in terms of procedures, logic blocks, processing, steps, and other symbolic representations of operations on data bits within a computer memory. These descriptions and representations are the means used by those skilled in the data processing arts to most effectively convey the substance of their work to others skilled in the art. A procedure, logic block, process, etc., is generally conceived to be a self-consistent sequence of steps or instructions leading to a desired result. The steps require physical manipulations of physical quantities. Usually, though not necessarily, these quantities take the form of electrical or magnetic signals capable of being stored, transferred, combined, compared and otherwise manipulated in a computer system. It has proven convenient at times, principally for reasons of common usage, to refer to these signals as bits, bytes, words, values, elements, symbols, characters, terms, numbers, or the like.

[0048] It should be born in mind that all of the above and similar terms are to be associated with the appropriate physical quantities they represent and are merely convenient labels applied to these quantities. Unless specifically stated otherwise as apparent from the following discussions, it is appreciated that throughout the present invention, discussions utilizing terms such as 'processing,' 'computing,' 'calculating,' 'determining,' 'displaying' or the like, refer to the action and processes of a computer system, or similar electronic computing device, that manipulates and transforms data represented as physical (electronic) quantities within the computer system's registers and memories into other data similarly represented as physical quantities within the computer system memories or registers or other such information storage, transmission or display devices.

[0049] The invention can take the form of an entirely hardware embodiment, an entirely software embodiment or an embodiment containing a combination of hardware and software elements. In one embodiment, a portion of the mechanism of the invention is implemented in software, which includes but is not limited to firmware, resident software, object code, assembly code, microcode, etc.

[0050] Furthermore, the invention can take the form of a computer program product accessible from a computer-usable or computer-readable medium providing program code for use by or in connection with a computer or any instruction execution system. For the purposes of this description, a computer-usable or computer readable medium is any apparatus that can contain, store, communicate, propagate, or transport the program for use by or in connection with the instruction execution system, apparatus, or device, e.g., floppy disks, removable hard drives, computer files comprising source code or object code, flash semiconductor memory (USB flash drives, etc.), ROM, EPROM, or other semiconductor memory devices.

Mobile Device/Cellular Phone/PDA System

[0051] A block diagram illustrating an example communication device in more detail incorporating the Bluetooth/WiMAX coexistence mechanism of the present invention is shown in FIG. **2**. The communication device may comprise any suitable wired or wireless device such as multimedia player, mobile device, cellular phone, PDA, Bluetooth device, etc. For illustration purposes only, the communication device is shown as a cellular phone. Note that this example is not intended to limit the scope of the invention as the Bluetooth/WiMAX coexistence mechanism of the present invention can be implemented in a wide variety of communication devices.

[0052] The cellular phone, generally referenced **70**, comprises a baseband processor or CPU **71** having analog and digital portions. The basic cellular link is provided by the RF transceiver **94** and related one or more antennas **96**, **98**. A plurality of antennas is used to provide antenna diversity which yields improved radio performance. The cell phone also comprises internal RAM and ROM memory **110**, Flash memory **112** and external memory **114**.

[0053] Several user interface devices include microphone **84**, speaker **82** and associated audio codec **80**, a keypad for entering dialing digits **86**, vibrator **88** for alerting a user, camera and related circuitry **100**, a TV tuner **102** and associated antenna **104**, display **106** and associated display controller **108** and GPS receiver and associated antenna **92**.

[0054] A USB interface connection **78** provides a serial link to a user's PC or other device. An FM receiver **72** and antenna **74** provide the user the ability to listen to FM broadcasts. WLAN radio and interface **76** and antenna **77** provide wireless connectivity when in a hot spot or within the range of an ad hoc, infrastructure or mesh based wireless LAN network. A Bluetooth radio and interface **73** and antenna **75** provide Bluetooth wireless connectivity when within the range of a Bluetooth wireless network. The communication device **70** may also comprise an Ultra Wideband (UWB) radio and interface **83** and antenna **81**. Further, the communication device **70** may also comprise a WiMAX radio and interface **123** and antenna **125**. SIM card **116** provides the interface to a user's SIM card for storing user data such as address book entries, etc.

[0055] The cellular phone also comprises a Bluetooth/WiMAX coexistence block **128** adapted to implement the Bluetooth/WiMAX coexistence mechanism of the present invention as described in more detail infra. In operation, the Bluetooth/WiMAX coexistence block **128** may be implemented as hardware, software executed as a task on the baseband processor **71** or a combination of hardware and software. Implemented as a software task, the program code operative to implement the Bluetooth/WiMAX coexistence mechanism of the present invention is stored in one or more memories **110**, **112** or **114**.

[0056] Portable power is provided by the battery **124** coupled to battery management circuitry **122**. External power is provided via USB power **118** or an AC/DC adapter **120** connected to the battery management circuitry which is operative to manage the charging and discharging of the battery **124**.

Example Mobile Device With Coexistence Mechanism

[0057] A simplified block diagram illustrating an example mobile handset incorporating the Bluetooth/WiMAX coexistence mechanism of the present invention is shown in FIG. **3**. The example circuit, generally referenced **130**, comprises an antenna **132**, 3-way antenna switch **134**, Bluetooth radio **136**, WiMAX radio **138** incorporating a WiMAX transmitter **142** and WiMAX receiver **144**, and a controller (processor) **140**. In accordance with the invention, the Bluetooth and WiMAX radios communicate with each other control information to prevent the transmissions from one radio affecting the other.

Example Bluetooth Module Incorporating the Coexistence Mechanism

[0058] A block diagram illustrating an example Bluetooth module adapted for use with the Bluetooth/WiMAX coexistence mechanism of the present invention is shown in FIG. **4**. The Bluetooth module (i.e. headset, cell phone, etc.), generally referenced **170**, comprises host interface (I/F) **178** in communication with a host device **180**, baseband processor/MAC **176**, memory **182**, PHY circuit **174**, Bluetooth radio **172**, controller **184** and power management module **188**. The radio circuitry **172**, coupled to the antenna switch **134** (FIG. **3**), comprises the RF switch, bandpass filter, RF front end circuitry, bandpass filter, etc. (not shown). The PHY circuit **174** comprises I and Q signal analog to digital converters (ADCs) and I and Q signal digital to analog converters (DACs) (not shown). The memory **182** comprises any memory devices such as EEPROM, static RAM, FLASH memory, etc. necessary for operation of the processor/MAC. Note that in one embodiment, the mechanism of the invention is implemented as firmware/software that resides in memory **182** and executed on the baseband processor or other controller device or is implemented in hardware in the MAC layer in the processor **176** (coexistence block **177**). Alternatively, the mechanism may be implemented in the host or a combination of the host and baseband processor or may be implemented in the controller **184** (coexistence block **186**).

[0059] The RF front end circuit with the radio functions to filter and amplify RF signals and perform RF to IF conversion to generate I and Q data signals for the ADCs and DACs in the PHY. The baseband processor functions to modulate and demodulate I and Q data, perform carrier sensing, transmission and receiving of frames. The medium access controller (MAC) functions to control the communications (i.e. access) between the host device and applications. The power management circuit **188** is adapted to receive power via a wall adapter, battery and/or power via the host interface **180**. The host interface may comprise PCI, CardBus or USB interfaces.

Example WiMAX Module Incorporating the Coexistence Mechanism

[0060] A block diagram illustrating an example WiMAX module adapted for use with the Bluetooth/WiMAX coexistence mechanism of the present invention is shown in FIG. **5**. The WiMAX module (i.e. cell phone, PDA, etc.), generally referenced **150**, comprises host interface (I/F) **158** in communication with a host device **162**, baseband processor/MAC **156**, memory **160**, PHY circuit **154**, WiMAX radio **152**, controller **164** and power management module **166**. The radio circuitry **152**, coupled to the antenna switch **134** (FIG. **3**), comprises the RF switch, band pass filter, RF front end circuitry, band pass filter, etc. (not shown). The PHY circuit **154** comprises I and Q signal analog to digital converters (ADCs) and I and Q signal digital to analog converters (DACs) (not shown). The memory **160** comprises any memory devices such as EEPROM, static RAM, FLASH memory, etc. necessary for operation of the processor/MAC. Note that in one embodiment, the mechanism of the invention is implemented as firmware/software that resides in memory **160** and executed on the baseband processor or other controller device or is implemented in hardware in the MAC layer in the processor **156** (coexistence block **155**). Alternatively, the mechanism may be implemented in the host or a combination of the host and baseband processor or may be implemented in the controller **164** (coexistence block **168**).

[0061] The RF front end circuit with the radio functions to filter and amplify RF signals and perform RF to IF conversion to generate I and Q data signals for the ADCs and DACs in the PHY. The baseband processor functions to modulate and demodulate I and Q data, perform carrier sensing, transmission and receiving of frames. The medium access controller (MAC) functions to control the communications (i.e. access) between the host device and applications. The power management circuit **166** is adapted to receive power

via a wall adapter, battery and/or power via the host interface **162**. The host interface may comprise PCI, CardBus or USB interfaces.

Coexistence Control

[0062] A simplified block diagram illustrating the communication of control signals between Bluetooth and WiMAX radios is shown in FIG. **6**. The example circuit, generally referenced **190**, comprises a Bluetooth transceiver **192**, Bluetooth radio **194**, WiMAX transceiver **200**, WiMAX radio **202**, Bluetooth/WiMAX front end circuit **196**, controller **204** and antenna **198**. In accordance with the invention, Bluetooth and WiMAX transceivers exchange control information to achieve coexistence between the Bluetooth and WiMAX radios. The coexistence control mechanism is described in more detail hereinbelow preceded by a brief description of WiMAX and Bluetooth technologies and environments.

WiMAX Environment

[0063] WiMAX transmissions and receptions are normally scheduled by the base station. The transmissions are organized in frames having a fixed duration. Each frame is split into a downstream portion and an upstream portion. The first part of the downstream transmission of a frame is a Media Access Protocol (MAP) message that describes the specific slots assigned to the mobile device for reception and transmission within this frame. In addition, WiMAX supports power save operation for the mobile device. A mobile device operating in power save mode goes through periods of activity and inactivity. The duration of these time periods are in the granularity of the duration of frame length.

[0064] The mobile WiMAX technology is based on the IEEE **802.16**e standard. The standard is very broad in terms of implementation options, but typically only a subset of its capabilities are deployed. The WiMAX forum has defined the profiles of usage for the 802.16e standard and the analysis herein is based on these profiles. The most important items in the context of this analysis are the WiMAX Time Division Duplex (TDD) operation and the frame size selection (5 msec). The analysis presented herein assumes the mobile station is connected to the WiMAX base station and used to deliver both data and voice services using all relevant WiMAX services such as Unsolicited Grant Services (UGS), non Real-time Polling (nRTP), etc.

[0065] The WiMAX specification includes support for mobile station power save operation which the present invention makes use of. The specification includes three different types of power save schemes, but the WiMAX profiles only mandate the support of Type 1. Several of the algorithms presented herein rely on the support of Power Save Type 3 by the Mobile Station and Base Station. Mobile stations and base stations without this support may not be able to implement one or more coexistence schemes of the present invention. Throughout this document, reference is made to the following two options (or conditions):

[0066] A1: Only the mandatory Power Save Type 1 mode is supported;

[0067] A2: Periodic Power Save Type 3 mode is supported;

Note that the operation of the coexistence schemes of the invention are presented for both these options.

[0068] The WiMAX system is a managed network with limited bandwidth. The coexistence mechanism of the invention attempts to avoid effecting the utilization of the WiMAX network. In other words, the coexistence mechanism allows the WiMAX transceiver to receive all slots assigned to it and transmit on all slot opportunities granted to it. It is noted that conflicts may arise in some scenarios between the aim of providing some required Bluetooth services and enabling full utilization of the WiMAX network. The mechanism of the invention attempts to maintain a "zero waste" policy and in the few cases where this is not possible, provides a tradeoff between WiMAX bandwidth waste and degradation of Bluetooth service.

Bluetooth Environment

[0069] Bluetooth transmissions can be split into one or two categories: Asynchronous Connectionless Link (ACL) and Synchronous Connection-Oriented Link (SCO)/extended SCO (eSCO) transmissions. ACL transmissions are used to send asynchronous data with retries available on transmission. ACL data transmissions are used for data transfer and newer audio profiles (e.g., stereo listening to MP3 music, etc.) ACL data may be rescheduled for transmission or completely blocked since it uses retires and can thus tolerate interruptions in transmission.

[0070] The Bluetooth transceiver is used to support different Bluetooth profiles and traffic types. The traffic can generally be categorized into one or two types as follows:

[0071] B1: ACL traffic that is used to carry data services such as file transfer, printing, modem data, etc. as well as unidirectional high quality audio (i.e. A2DP profile). ACL traffic has no tight scheduling requirement as compared to the WiMAX frame size and can tolerate latencies of at least 10 msec. Since, the ACL traffic uses a retry mechanism it is not vulnerable to packet loss.

[0072] B2: SCO/eSCO traffic that is used to carry latency sensitive services such as voice. The SCO traffic has no retries and is therefore extremely sensitive to packet loss. Although eSCO traffic has the option to use retries, the number of retries is usually very limited and therefore it is partially sensitive to packet loss.

[0073] SCO/eSCO transmissions use fixed synchronous patterns to send data typically with no retires or a limited number of retries. SCO/eSCO data is used primarily for voice such as in Bluetooth enabled voice headsets. Once an SCO/eSCO connection is established, the schedule of transmission should be maintained in order to guarantee a level of voice quality.

[0074] The collocated Bluetooth transceiver is assumed to be Bluetooth version 2.0+Enhanced Data Rate (EDR). The ability to use all of the capabilities of the advanced Bluetooth standard depends on the support provided from the remote device connected to the Bluetooth transceiver. The ability to implement the coexistence mechanisms of the present invention is determined by whether Bluetooth devices such as headsets support advanced capabilities.

[0075] The following three options for voice scheduling is referred to throughout this document:

[0076] C1: Bluetooth 1.1 system without eSCO; voice traffic uses SCO HV3 with no retries;

[0077] C2: Bluetooth 1.2+Hands Free Protocol (HFP) 1.5 systems with eSCO operating in EV3 with periodicity of six slots;

[0078] C3: Bluetooth 1.2+HFP 1.5 systems with eSCO operating with flexible packet type and periodicity;

[0079] In addition, a Bluetooth handset may operate as a master or as a slave on the communication link with the headset. This determines whether the handset controls the system clock or if it synchronizes to the remote headset. The standard operation of a headset is usually based on the headset being the master. The handset can, however, switch the roles of master and slave through negotiation with the headset. In this case, there are two scenarios to analyze:

[0080] D1: The headset operates as a slave or supports master/slave role switching;

[0081] D2: The headset operates as a master and does not support role switching;

The operation of the coexistence mechanism with all of the above options and conditions is described infra.

[0082] As shown in FIG. **3**, the coexistence mechanism utilizes a single antenna **132** configuration. The WiMAX and Bluetooth transceivers are connected to the antenna through an antenna switch **134** comprising three positions for WiMAX transmitter, WiMAX receiver and Bluetooth transceiver. The isolation provided by the switch between the Bluetooth and WiMAX terminals is preferably greater than 25 dB.

[0083] In general, the coexistence mechanism of the present invention utilizes multiple algorithms depending on the capabilities of the Bluetooth peer and the power save support level of the WiMAX base station. In the example embodiment presented herein, the coexistence mechanism is implemented in the MAC layer of the Bluetooth and WiMAX radio modules.

[0084] The Bluetooth transceiver tine base is synchronized to WiMAX frames. Bluetooth ACL transmissions are preempted whenever the WiMAX radio is operating in either receive or transmit. When a Bluetooth eSCO link is set up, the WiMAX radio switches to power save mode and the listen and sleep periods are adjusted accordingly. Bluetooth transmission slots are initially scheduled such that they do not overlap WiMAX listen windows. Synchronization between the Bluetooth and WiMAX radio modules is maintained by applying corrections to the Bluetooth clock based on the start of frames indication signals generated by the WiMAX transceiver.

Bluetooth/WiMAX Coexistence Method #1: B1

[0085] A flow diagram illustrating a first Bluetooth/WiMAX coexistence method of the invention is shown in FIG. **7**. Method #1 is suitable in the case of B1 type Bluetooth traffic, i.e. asynchronous connectionless link (ACL) traffic used to carry non-latency sensitive data services such as file transfer, printing, etc. For Bluetooth ACL traffic the coexistence mechanism is operative to block the Bluetooth transceiver from operating during the active periods of the WiMAX transceiver. Thus, if Bluetooth ACL traffic is detected (step **210**) and the WiMAX transceiver is active (i.e. transmitting, receiving) (step **212**), then the Bluetooth transceiver is shutdown (step **214**), thus preventing transmission or reception. To achieve this, the WiMAX transceiver generates a signal that is output to the Bluetooth transceiver. In response to the signal, the Bluetooth receiver shuts down its transceiver circuit. The WiMAX transceiver generates the signal whenever it is receiving a frame header and MAP and in all receive and transmit slots associated with it.

[0086] Note that Bluetooth operation is maintained due to ACL retransmissions and the low duty cycle of WiMAX per single mobile device, which is assumed. If the WiMAX traffic is sufficiently sparse, the above scheme should provide the Bluetooth transceiver with enough transmission opportunities to deliver reasonable throughput and service. In the event the WiMAX traffic is not sufficiently sparse (step **216**), the mechanism periodically creates WiMAX silence periods to allow for the Bluetooth traffic to pass (step **218**). These silence periods should be enough to allow the largest Bluetooth exchange to pass (i.e. 6 Bluetooth slots=3.75 msec).

[0087] This may be achieved by putting the WiMAX transceiver into power save mode. The required effect can be achieved for both Power Save Type 1 and 3, with Type 3 being preferable.

Bluetooth/WiMAX Coexistence Method #2: B2 & C3 & D1 & A2

[0088] A flow diagram illustrating a second Bluetooth/WiMAX coexistence method of the invention is shown in FIG. **8**. Method #2 is suitable when conditions B2 & C3 & D1 & A2 are met. If conditions D1 & C3 & A2 are fulfilled (step **220**) then the following coexistence solution can be used for B2 type Bluetooth traffic (e.g., voice data).

[0089] The Bluetooth device is synchronized to WiMAX frames (step **222**). The WiMAX transceiver is operative to generate a synchronization signal that is input to the Bluetooth transceiver. The Bluetooth device negotiates a master role with the device at the other end of the Bluetooth link (e.g., the headset) and also negotiates an eSCO link of periodicity of 15 msec with the headset (step **224**). The WiMAX transceiver negotiates a Power Save Type 3 mode with the host with a period of two frames awake and one frame in sleep (step **226**). The sleep frame is synced with the activity period of the Bluetooth eSCO link (step **228**). Note that the current WiMAX specification requires a minimum of two awake slots since upstream MAP is provided for the next frame and not the current frame.

[0090] A diagram illustrating timing relationship between Bluetooth and WiMAX activity is shown in FIG. **9**. The WiMAX active frames **230** (5 msec wide) are shown in cross hatching, while the WiMAX sleep frames **236** are shown with no crosshatching. Both transceivers are configured such that Bluetooth activity **234** occurs while the WiMAX transceiver is in a sleep frame. Bluetooth activity is synchronized to the WiMAX sync pulses **232**.

Bluetooth/WiMAX Coexistence Method #3: B2 & C2 & D1 & A2

[0091] A flow diagram illustrating a third Bluetooth/WiMAX coexistence method of the invention is shown in FIG. **10**. Method #3 is suitable when conditions B2 & C2 & D1 & A2 are met. If conditions D1 & C2 & A2 are met (step

240) and latency sensitive Bluetooth traffic is to be transmitted, then the following coexistence solution can be used for B2 type Bluetooth traffic (e.g., voice data).

[0092] The Bluetooth device is synchronized to WiMAX frames (step **242**). The WiMAX transceiver is operative to generate a synchronization signal that is input to the Bluetooth transceiver. The Bluetooth device negotiates a master role with the device at the other end of the Bluetooth link (e.g., the headset) and also negotiates an eSCO link of periodicity of 3.75 msec with the headset using EV3 with at least one retry (step **224**). The WiMAX station negotiates a Power Save Type 3 with the host with a period of two frames awake and one frame in sleep (step **246**). The sleep frame is synced such that it starts approximately 300 us from the end of the Bluetooth audio slot (step **248**). The coexistence mechanism timing guarantees that the WiMAX transceiver will need to blank only one of the audio transactions in order to allow WiMAX reception and transmission during its active period.

[0093] Thus, as a first option, when a Bluetooth SCO/eSCO link is setup, the WiMAX transceiver switches to power save mode. If the base station capabilities permit (i.e. power save state and WiMAX frame size), the WiMAX listen period and sleep window are selected to be a multiple of the basic eSCO period with the listen period being smaller than the non-active period of the eSCO link. The Bluetooth transceiver attempts to establish eSCO periods that are a multiple of the WiMAX frame size.

[0094] If the base station does not have sufficient capabilities but the eSCO link provides for retransmissions, as a second option, the WiMAX transceiver selects a listen period and sleep window such that at least one of the retransmission attempts for each Bluetooth eSCO burst does not overlap the WiMAX listen window.

[0095] If either of the first or second options are used, the Bluetooth SCO/eSCO transmission slots are initially scheduled such that they do not overlap WiMAX listen windows. Otherwise, the Bluetooth transceiver is blocked or shutdown resulting in a degradation of its QoS.

[0096] Note also that synchronization between the Bluetooth and WiMAX transceivers is maintained by applying corrections to the Bluetooth clock based on the start of frame indication signal from the WiMAX transceiver. The Bluetooth transceiver operates as a master and will initiate a role switch if it was setup as a slave during link initiation.

Bluetooth/WiMAX Coexistence Method #4: B2 & (C2|C3)

[0097] A flow diagram illustrating a fourth Bluetooth/WiMAX coexistence method of the invention is shown in FIG. **11**. If conditions C2 or C3 are met (step **250**), then the following coexistence solution can be used for B2 Bluetooth traffic (e.g., voice data) for all D & A options (i.e. D1, D2, A1 and A2).

[0098] If a WiMAX active reception/transmission exists (step **252**), it is then checked whether the Bluetooth transmission is a last retry for a latency sensitive packet such as voice (step **254**).

[0099] If the Bluetooth transmission is not a last retry packet, then the Bluetooth transmission is blocked (step **256**). If, however, the Bluetooth transmission is a last retry packet, then this case is treated as an exception and the Bluetooth transmission takes precedence over the WiMAX transmit/receive activity (step **258**). This ensures that the Bluetooth voice quality is maintained with the consequence that the WiMAX bandwidth may suffer some degradation. Note that the larger the number of retries configured for the Bluetooth transceiver, however, the lower the wasted bandwidth on the Bluetooth side.

Bluetooth/WiMAX Coexistence Method #5: B2 & C1

[0100] A flow diagram illustrating a fifth Bluetooth/WiMAX coexistence method of the invention is shown in FIG. **12**. If conditions C1 is met (step **250**), then the following coexistence solution can be used for B2 Bluetooth traffic (e.g., voice data). Note that the solution provided by the coexistence mechanism may not be sufficient depending on the particular implementation and system requirements.

[0101] In the case that Bluetooth voice operation is detected (i.e. latency sensitive services traffic such as voice) (step **262**), the coexistence mechanism is operative to block WiMAX transmit/receive activity during Bluetooth B2 type transmissions (step **264**). Note, however, for HV3 or EV3 with period six, the WiMAX operation may be significantly effected resulting in increased bandwidth requirements for the mobile station.

Summary of Coexistence Methods

[0102] The following Table 1 below summarizes the different algorithmic options and their usage that are part of the coexistence mechanism. Regarding the quality of the algorithms presented in each of the five methods in terms of its effect on WiMAX wasted bandwidth, methods #1, #2 and #3 are superior to methods #4 and #5. Note that within each method, a tradeoff exists between the degree of WiMAX wasted bandwidth versus the degree of degradation of the Bluetooth voice quality, with each able to be traded off for the other.

TABLE 1

Summary of Coexistence Methods

	B1	A1 & B2	A2 & B2
C1 & D1	Method #1	Method #5	Method #5
C1 & D2	Method #1	Method #5	Method #5
C2 & D1	Method #1	Method #4	Method #3
C2 & D2	Method #1	Method #4	Method #4
C3 & D1	Method #1	Method #4	Method #2
C3 & D2	Method #1	Method #4	Method #4

[0103] Note also that an implementation of the coexistence mechanism can use all or a combination of the above methods and techniques wherein a specific method, technique or algorithm may be used in accordance with the supported features and traffic types of the particular system.

[0104] It is intended that the appended claims cover all such features and advantages of the invention that fall within the spirit and scope of the present invention. As numerous modifications and changes will readily occur to those skilled in the art, it is intended that the invention not be limited to the limited number of embodiments described herein. Accordingly, it will be appreciated that all suitable variations, modifications and equivalents may be resorted to, falling within the spirit and scope of the present invention.

What is claimed is:

1. A method of coexistence between a Bluetooth transceiver and a WiMAX transceiver collocated in a mobile device, said method comprising the steps of:

generating a signal indicating active reception or transmission of said WiMAX transceiver; and

receiving said signal by said Bluetooth transceiver and blocking transmit and receive activity in said Bluetooth transceiver in response thereto.

2. The method according to claim **1**, wherein said signal is generated by said WiMAX transceiver when it receives a frame header and media access protocol (MAP) and in all receive and transmit slots associated therewith.

3. The method according to claim **1**, further comprising the step of periodically creating WiMAX silence periods if WiMAX traffic is not sufficiently sparse.

4. A method of coexistence between a Bluetooth transceiver and a WiMAX transceiver collocated in a mobile device, said method comprising the steps of:

synchronizing said Bluetooth transceiver to WiMAX frames;

WiMAX switching to power save mode in response to Bluetooth eSCO link setup;

configuring WiMAX listen period and sleep window as a multiple of a basic eSCO period, said Bluetooth transceiver attempting to establish eSCO periods as a multiple of WiMAX frame size; and

if base station capabilities do not permit power save and WiMAX frame size, selecting a listen period and sleep window such that at least one retransmission attempt for each Bluetooth eSCO burst does not overlap said WiMAX listen window.

5. The method according to claim **4**, wherein said step of synchronizing comprises the step of said WiMAX transceiver generating a synchronization signal for input to said Bluetooth transceiver.

6. The method according to claim **4**, wherein said step of configuring comprises the step of configuring said listen period to be smaller then a non-active period of said eSCO link.

7. The method according to claim **4**, further comprising the step of if said Bluetooth transceiver does not support eSCO retransmissions, blocking Bluetooth transmit and receive activity during WiMAX transmit and receive activity.

8. The method according to claim **7**, further comprising the step of maintaining synchronization via corrections to a Bluetooth clock based on a start of frames indication from said WiMAX transceiver.

9. The method according to claim **4**, further comprising the step of said Bluetooth transceiver operating as a master.

10. The method according to claim **4**, further comprising the step of said Bluetooth transceiver initiating a role switch if it was setup as a slave device during link initiation.

11. The method according to claim **4**, further comprising the step of initially scheduling Bluetooth SCO/eSCO transmission slots such that they do not overlap WiMAX listen windows.

12. A method of coexistence between a Bluetooth transceiver and a WiMAX transceiver collocated in a mobile device, said method comprising the steps of:

blocking said Bluetooth transceiver when WiMAX transmit/receive activity is detected; and

permitting an exception for Bluetooth last retry latency sensitive packet transmission which takes precedence over WiMAX transmit/receive activity.

13. The method according to claim **12**, wherein said latency sensitive packet comprises voice data.

14. A method of coexistence between a Bluetooth transceiver and a WiMAX transceiver collocated in a mobile device, said method comprising the steps of:

detecting intent of said Bluetooth transceiver to transmit latency sensitive services traffic; and

if said Bluetooth transceiver does not support transmission retries, blocking WiMAX transceiver transmit/receive activity during transmission of latency sensitive services traffic by said Bluetooth transceiver.

15. The method according to claim **14**, wherein said latency sensitive services traffic comprises voice data.

16. A mobile communications device, comprising:

a Bluetooth transceiver and associated Bluetooth media access control (MAC);

a WiMAX transceiver and associated WiMAX MAC;

coexistence means coupled to said Bluetooth transceiver and said WiMAX transceiver, said coexistence means operative to;

synchronize the time base of said Bluetooth transceiver to WiMAX frames;

block Bluetooth ACL transmissions during WiMAX transmit/receive activity;

switch said WiMAX transceiver to power save mode in response to Bluetooth SCO link setup and to select a listen period and sleep window to be a multiple a basic SCO period;

schedule Bluetooth SCO slots such that they do not overlap with WiMAX listen windows; and

a processor operative to send and receive data to and from said Bluetooth transceiver and said WiMAX transceiver.

17. The mobile communications device according to claim **16**, further comprising the step of maintaining synchronization by corrections of a Bluetooth transceiver clock based on a start of frame indication signal generating by said WiMAX transceiver.

18. The mobile communications device according to claim **16**, wherein said SCO link comprises latency sensitive voice traffic.

19. The mobile communications device according to claim **16**, wherein said Bluetooth transceiver is synchronized via a synchronization signal generated by said WiMAX transceiver.

20. The mobile communications device according to claim **16**, wherein said Bluetooth transceiver is operative to act as a master.

21. The mobile communications device according to claim **16**, wherein said Bluetooth transceiver is operative to initiate a role switch if it was setup as a slave device during link setup.

* * * * *