A Unified Approach

PRINCIPLES OF

Wireless Networks

Kaveh Pahlavan
Prashant Krishnamurthy

Prentice Hall Communications Engineering and Emerging Technologies Series
Theodore S. Rappaport, Series Editor

IPR2025-01236
Apple EX1025 Page 1

Prentice Hall Communications Engineering and Emerging Technologies Series

Theodore S. Rappaport, *Series Editor*

DOSTERT *Powerline Communications*

GARG *Wireless Network Evolution: 2G to 3G*

GARG *IS-95 CDMA and cdma2000: Cellular/PCS Systems Implementation*

GARG & WILKES *Principles and Applications of GSM*

HAĆ *Multimedia Applications Support for Wireless ATM Networks*

KIM *Handbook of CDMA System Design, Engineering, and Optimization*

LIBERTI & RAPPAPORT *Smart Antennas for Wireless Communications: IS-95 and Third Generation CDMA Applications*

PAHLAVAN & KRISHNAMURTHY *Principles of Wireless Networks: A Unified Approach*

RAPPAPORT *Wireless Communications: Principles and Practice, Second Edition*

RAZAVI *RF Microelectronics*

STARR, CIOFFI & SILVERMAN *Understanding Digital Subscriber Line Technology*

PRINCIPLES OF WIRELESS NETWORKS

A Unified Approach

Kaveh Pahlavan
Worcester Polytechnic Institute
University of Oulu

Prashant Krishnamurthy
University of Pittsburgh

PH PTR
Prentice Hall PTR
Upper Saddle River, New Jersey 07458
www.phptr.com

IPR2025-01236
Apple EX1025 Page 2

Library of Congress Cataloging-in-Publication Data

Pahlavan, Kaveh, 1951-
Principles of wireless networks: a unified approach / Kaveh Pahlavan, Prashant Krishnamurthy
p. cm.— (Prentice Hall communications engineering and emerging technologies series)
Includes bibliographical references and index.
ISBN 0-13-093003-2
1. Wireless communication systems. I. Krishnamurthy, Prashant. II. Title. III. Series.
TK5103.2 .P3397 2002
621.382—dc21

2002002268

To those whose love kept us writing, those whose work inspired our learning, and those with whom we learned.

Acquisitions editor: *Bernard Goodwin*
Marketing manager: *Dan DePasquale*
Manufacturing buyer: *Alexis Heydt-Long*
Editorial/production supervision: *Jessica Balch (Pine Tree Composition)*
Production coordinator: *Anne R. Garcia*
Cover design director: *Jerry Votta*
Cover design: *Anthony Gemmellaro*
Art director: *Gail Cocker-Bogusz*
Art studio: *LP Graphics*

© 2002 by Prentice Hall PTR
Prentice-Hall, Inc.
Upper Saddle River, New Jersey 07458

Prentice Hall books are widely used by corporations and government agencies for training, marketing, and resale.

The publisher offers a discount on this book when ordered in bulk quantities. For more information, contact: Corporate Sales Department, Phone: 800-382-3419; Fax: 201-236-7141; E-mail: corpsales@prenhall.com; or write: Prentice Hall PTR, Corp. Sales Dept., One Lake Street, Upper Saddle River, NJ 07458

All products or services mentioned in this book are the trademarks or service marks of their respective companies or organizations.

All rights reserved. No part of this book may be reproduced, in any form by any means, without permission in writing from the publisher.

Printed in the United States of America
10 9 8 7 6 5 4 3 2

Reprinted with corrections November, 2002.

ISBN 0-13-093003-2

Pearson Education Ltd., *London*
Pearson Education Australia Pty, Limited, *Sydney*
Pearson Education Singapore, Pte. Ltd.
Pearson Education North Asia Ltd., *Hong Kong*
Pearson Education Canada, Ltd., *Toronto*
Pearson Educación de Mexico, S.A. de C.V.
Pearson Education—Japan, *Tokyo*
Pearson Education Malaysia, Pte. Ltd.

CONTENTS

Preface xi

CHAPTER 1 Overview of Wireless Networks 1

1.1 Introduction 2
1.2 Different Generations of Wireless Networks 12
1.3 Structure of the Book 21
Appendix 1A Backbone Networks for Wireless Access 26
Appendix 1B Summary of Important Standards Organizations 33
Questions 34

PART ONE PRINCIPLES OF AIR-INTERFACE DESIGN 37

CHAPTER 2 Characteristics of the Wireless Medium 39

2.1 Introduction 40
2.2 Radio Propagation Mechanisms 44
2.3 Path-Loss Modeling and Signal Coverage 46
2.4 Effects of Multipath and Doppler 58
2.5 Channel Measurement and Modeling Techniques 68
2.6 Simulation of the Radio Channel 71
Appendix 2A What is dB? 76
Appendix 2B Wired Media 77
Appendix 2C Path Loss Models 79
Appendix 2D Wideband Channel Models 79
Questions 80
Problems 81

1.1 INTRODUCTION

Technological innovations of engineers during the 20th century have brought a deep change in our lifestyle. Today, when we fly over a modern city at night we see the earth full of footprints made by engineers. The glowing lights remind us of the impact made by electrical engineers; the planes we fly in and the moving cars below remind us of the contributions of mechanical engineers; and high-rise buildings and complex roads remind us of what civil engineers have accomplished. From the eyes of an engineer, the glow of light, the movement of cars, and the complexity of civil infrastructure relates to the challenges in implementation, size of the market, and the impact of the technology on human life. There is, however, one industry whose infrastructure is not seen from the plane because it is mostly buried under the ground, but it is the most complex, it owns the largest market size, and it has enabled us to change our lifestyle by entering the information technology age. This industry is the *telecommunications networking industry*.

To have an intuitive understanding of the size of the telecommunications industry, it is good to know that the size of the budget of AT&T in the early 1980s, before its divestiture, was nearly the budget of the fifth largest economy of the world. AT&T was the largest telecommunications company in the world, and its core revenue at that time was generated from plain old telephone service (POTS) that was first introduced in 1867.

During the past two decades, the cellular telephone industry augmented the income of the prosperous voice-oriented POTS with the subscriber fees of about 1 billion cellular telephone users worldwide [EMC01]. Today the income of the wireless industry has already surpassed the income of the wired telephone industry, and this income is by far dominated by the revenue of cellular phones. In the mid 1990s, the data-oriented Internet brought the computer communications industry from the office to the home, which soon generated an income comparable to that of the voice-oriented POTS and wireless industry. Figure 1.1 illustrates the growth of the fixed (POTS), wireless, and Internet industries in recent years. At the time of this writing, the *information exchange industry* that includes the fixed and wireless telephone as well as Internet access industries has an annual revenue of a few trillion dollars and is by far the largest industry in the world. The wireless networking industry makes up a third of the revenue of the information industry, and its share of the overall market is growing. Today this income is dominated by revenue from cellular telephone applications. The future of this industry relies on broadband wireless Internet access that is expected to develop a large market for emerging multimedia applications.

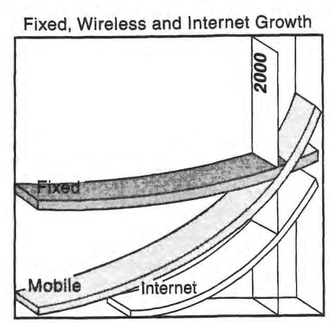

Figure 1.1 Worldwide growth of the fixed, wireless, and Internet communication industries in the past decade.

The purpose of this book is to provide the reader with a text for understanding the principles of wireless networks, which include the cellular telephone and wireless broadband access technologies. Wireless networking is a multidisciplinary technology. To understand this industry, we need to learn aspects of a number of disciplines to develop an intuitive feeling of how these disciplines interact with one another. To achieve this goal, we provide an overview of the important wireless standards and products, describe and classify their underlying technologies in a logical manner, give detailed examples of successful standards and products, and provide a vision of evolving technologies. In this first chapter, we provide an overview of the wireless industry and its path of evolution. The following five chapters describe principles of technologies that are used in wireless networks. The next three chapters discuss the details of wireless wide area networks (WANs), and the last four chapters describe short-range broadband and ad hoc wireless networks.

In this chapter we first provide an overview of the evolution of the wireless information network industry. We describe the meaning of a wireless network, and we give a summary of the important standards. Then we discuss the technical aspects and general structure of a wireless network. Finally we give an outline of the chapters of the book and how they relate to one another.

1.1.1 Information Network Infrastructure

An information network infrastructure interconnects telecommunication devices to provide them with means for exchanging information. Telecommunication devices are terminals allowing users to run applications that communicate with other terminals through the information network infrastructure. The basic elements of an information network infrastructure are a number of switches or routers that are connected via point-to-point links. Switches include fixed and variable rate voice-oriented circuit switches and routers that are low speed and high speed data-oriented packet switches. The point-to-point links include a variety of fiber, coaxial cable, twisted pair wires, and wireless connections.

To support transmission of voice, data, and video, several wired information network infrastructures have evolved throughout the past century. Wireless networks allow a mobile telecommunications terminal to access these wired information network infrastructures. At first glance it may appear that a wireless network is only an antenna site connected to one of the switches in the wired information infrastructure which enables a mobile terminal to be connected to the backbone network. In reality, in addition to the antenna site, a wireless network may also

IPR2025-01236
Apple EX1025 Page 4

need to add its own mobility-aware switches and base station control devices to be able to support mobility when a mobile terminal changes its connection point to the network. Therefore, a wireless network has a fixed infrastructure with mobility-aware switches and point-to-point connections, similar to other wired infrastructures, as well as antenna sites and mobile terminals.

Example 1.1: PSTN and Cellular

Figure 1.2 shows the overall picture for the wired and wireless telephone services. The public switched telephone network (PSTN), designed to provide wired telephone services, is augmented by a wireless fixed infrastructure to support mobility of the mobile terminal that communicates with several base stations mounted over antenna posts. The PSTN infrastructure consists of switches, point-to-point connections, and computers used for operation and maintenance of the network. The fixed infrastructure of the cellular telephone service has its own mobility-aware switches, point-to-point connections, and other hardware and software elements that are needed for the mobile network operation and maintenance. A wireless telecommunications device, such as a cordless telephone, can connect to the PSTN infrastructure by replacing the wire attachment with radio transceivers. But, for the mobile terminal to change its point of contact (antennas) the PSTN switches must be able to support mobility. Switches in the PSTN infrastructure were not originally designed to support mobility. To solve this problem, the cellular telephone service providers add their own fixed infrastructure with mobility-aware switches. The fixed infrastructure of the cellular telephone service provider is an interface between the base stations and the PSTN infrastructure that implements the requirements to support mobility.

In the same way a telephone service provider needs to add its own infrastructure to allow a mobile telephone to connect to the PSTN, a wireless data network provider needs its own infrastructure to support wireless Internet access.

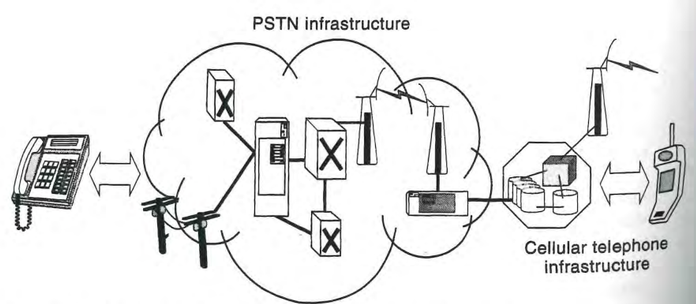

Figure 1.2 PSTN and its extension to cellular telephone services.

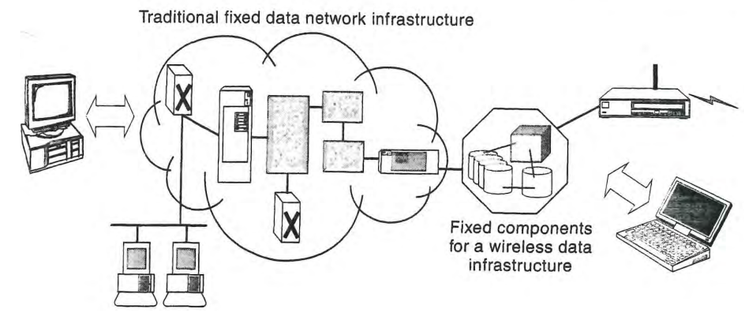

Figure 1.3 Internet and its extension to wireless data services.

Example 1.2: Wireless Internet

Figure 1.3 shows the traditional wired data infrastructure and the additional wireless data infrastructure that allow wireless connection to the Internet. The traditional data network consists of routers, point-to-point connections, and computers for operation and maintenance. The elements of a wireless network include mobile terminals, access points, mobility-aware routers, and point-to-point connections. This new infrastructure has to support all the functionalities needed to support mobility.

The difference between Examples 1 and 2 is that the wireless network in Figure 1.2 is a connection-based, voice-oriented network, and the wireless network in Figure 1.3 is a connectionless data-oriented network. A voice-oriented network needs a dialing process, and after the dialing, a certain quality of service (QoS) is guaranteed to the user during the communication session. In data-oriented networks there is no dialing, and terminals are always connected to the network, but a definite QoS is not guaranteed.

1.1.2 Overview of Existing Network Infrastructure

Because the existence of the wireless networks heavily depends on the wired infrastructure that they connect to, in this section we provide an overview of the important types of wired infrastructure. More details on the evolution of these wired backbone infrastructures are provided in Appendix 1A. The most commonly used wired infrastructures for wireless networks are the PSTN, the Internet, and hybrid fiber coax (HFC), originally designed for voice, data, and cable TV distribution applications, respectively. Figure 1.4 provides an overall picture of these three networks and how they relate to other wired and wireless networks.

The main sources of information transmitted through telecommunications devices are voice, data, and video. Voice and video are analog in nature, and data is digital. The dominant voice application is telephony, which is a bidirectional, symmetric, real-time conversation. To support telephony, telephone service

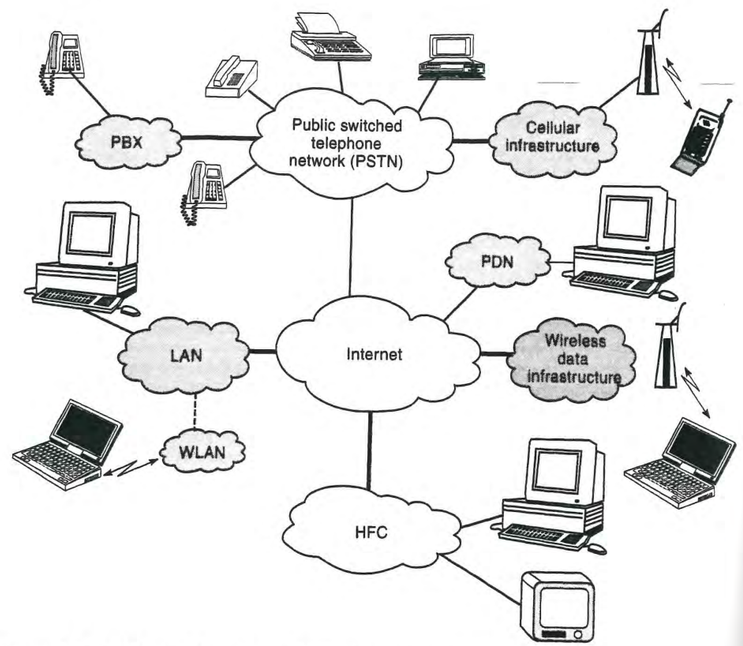

Figure 1.4 Backbone infrastructures: PSTN, Internet, and HFC.

providers have developed a network infrastructure that establishes a connection for a telephone call during the dialing process and disconnects it after completion of the conversation. As we saw in Example 1, this network is referred to as the PSTN. As shown in the top of Figure 1.4, the cellular telephone infrastructure provides a wireless access to the PSTN. Another network attached to the PSTN is the private branch exchange (PBX), which is a local telephone switch privately owned by companies. This private switch allows privacy and flexibility in providing additional services in an office environment. The PSTN physical connection to homes is a twisted-pair analog telephone wiring that is also used for broadband digital services. The core of the PSTN is a huge digital transmission system that allocates 64 kbps channels for each direction of a telephone conversation. Other network providers often lease the PSTN transmission facilities to interconnect their nodes.

The infrastructure developed for video applications is cable television, shown in the lower part of Figure 1.4. This network broadcasts wideband video signals to residential buildings. A cable goes from an end office to residential areas, and all

users are provided service that is tapped from the same cable. The set-top boxes leased out by cable companies provide selectivity of channels depending on the charged rates. The end offices, where a group of distribution cables arrive, are connected to one another with fiber. For this reason, the cable TV network is also called hybrid fiber coax (HFC). More recently cable distribution has also been used for broadband home access to the Internet.

The data network infrastructure was developed for bursty applications and evolved into the Internet that supports Web access, email, file transfer, and telnet applications, as well as multimedia (voice, video, and data) sessions with a wide variety of session characteristics. The middle part of Figure 1.4 shows the Internet and its relation to other data networks. From the user's, point of view, the data-oriented networks are always connected, but they only use the transmission resources when a burst of information needs it. Sessions of popular data communications applications, such as Web browsing or file transfer protocol (FTP) are often asymmetric, and a short burst of upstream requests results in a downstream transmission of a large amount of data. Symmetric sessions such as Internet Protocol (IP) telephony over data networks are also becoming popular, providing an alternative to traditional telephony. The Internet access to home is a logical access that is physically implemented on other media such as cable TV wiring or telephone wiring. The distribution of the Internet in office areas is usually through local area networks (LANs). Wireless LANs (WLANs) in the offices are usually connected to the Internet through the LANs. These days all other private data networks, such as those used in the banks or airline reservation industries, are also connected to the Internet. As we saw in Example 2, the Internet is also the backbone for wireless data services.

1.1.3 Four Market Sectors for Wireless Applications

The market for wireless networks has evolved in four different segments that can be logically divided into two classes: *voice-oriented* market and *data-oriented* market. The voice-oriented market has evolved around wireless connections to the PSTN. These services further evolved into local and wide area markets. The local voice-oriented market is based on low-power, low-mobility devices with higher quality of voice, including cordless telephone, personal communication services (PCS), wireless PBX, and wireless telepoint. The wide area voice-oriented market evolved around cellular mobile telephone services that are using terminals with a higher power consumption, comprehensive coverage, and lower quality of voice. Figure 1.5(a) compares several features of these two sectors of the voice-oriented market. The wireless data-oriented market evolved around the Internet and computer communication network infrastructure. The data-oriented services are divided into broadband local and ad hoc and wide area mobile data markets. The wide area wireless data market provides for Internet access for mobile users. Local broadband and ad hoc networks include WLANs and wireless personal area networks (WPANs) which provide for high-speed Internet access, as well as evolving ad hoc wireless consumer products. Figure 1.5(b) illustrates several differences among the local- and wide-area wireless data networks.

IPR2025-01236
Apple EX1025 Page 6

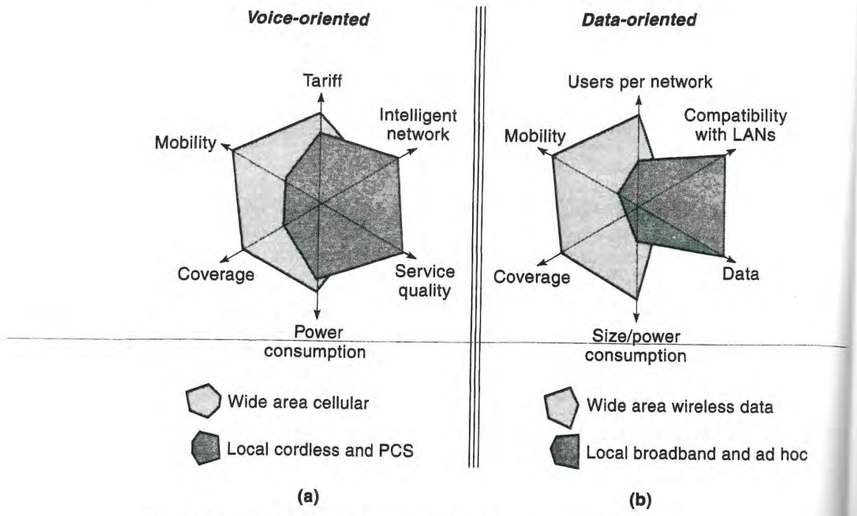

Figure 1.5 Wireless market sectors: (a) voice-oriented networks and (b) data-oriented networks.

1.1.4 Evolution of Voice-Oriented Wireless Networks

Table 1.1 shows a brief chronology of the evolution of voice-oriented wireless networks. The technology for frequency division multiple access (FDMA) analog cellular systems was developed at AT&T Bell Laboratories in the early 1970s. However, the first deployment of these systems took place in the Nordic countries as the Nordic Mobile Telephony (NMT) about a year earlier than the deployment of the Advanced Mobile Phone System (AMPS) in the United States. Because the United States is a large country, the frequency administration process was slower and it took a longer time for the deployment. The digital cellular networks started in Nordic countries with the formation of the Groupe Special Mobile standardization group that became the Global System for Mobile Communications (GSM). The GSM standard group was originally formed to address the international roaming, a serious problem for cellular operation in the European Union (EU) countries. The standardization group shortly decided to go for a new digital time division multiple access (TDMA) technology because it could allow integration of other services to expand the horizon of wireless applications [HAU94]. In the United States, however, the reason for migration to digital cellular was that the capacity of the analog systems in major metropolitan areas such as New York City and Los Angeles had reached its peak value, and there was a need for increasing it in the existing allocated bands. Although Nordic countries, led by Finland,

Table 1.1 History of Voice-Oriented Wireless Networks

Year	Event
Early 1970s	Exploration of first-generation mobile radio at Bell Labs
Late 1970s	First-generation cordless phones
1982	Exploration for second-generation digital cordless CT-2
1982	Deployment of first generation Nordic analog NMT
1983	Deployment of U.S. AMPS
1983	Exploration of the second-generation digital cellular GSM
1985	Exploration of wireless PBX, DECT
1988	Initiation for GSM development
1988	Initiation for IS-54 digital cellular
1988	Exploration of the QUALCOMM CDMA technology
1991	Deployment of GSM
1993	Deployment of PHS/PHP and DCS-1800
1993	Initiation for IS-95 standard for CDMA
1995	PCS band auction by FCC
1995	PACS finalized
1998	3G standardization started

have always maintained the highest rate of cellular telephone penetration, in the early days of this industry the United States was by far the largest market. By 1994, there were 41 million subscribers worldwide, 25 million of them in the United States. The need for higher capacity motivated the study of code division multiple access (CDMA) that was originally perceived to provide capacity that was orders of magnitude higher than other alternatives, such as analog band splitting or digital TDMA.

While the debate between TDMA and CDMA was in progress in the United States, deployment of GSM technology started in the EC in the early 1990s. At the same time, developing countries started their planning for cellular telephone networks, and most of them adopted the GSM digital cellular technology over the legacy analog cellular. Soon after, GSM had penetrated into more than 100 different countries. An interesting phenomenon in the evolution of the cellular telephone industry was the unexpected rapid expansion of this industry in developing countries. In these countries the growth of the infrastructure for wired POTS was slower than the growing demand for new subscriptions, and there was always a long waiting time to acquire a telephone line. As a result, in most of these countries telephone subscriptions were sold on the black market at a price several times the actual value. Penetration of cellular telephones in these countries was much easier because people were already prepared for a higher price for telephone subscriptions, and the expansion of cellular networks occurred much faster than POTS.

In the beginning of the race between TDMA and CDMA, CDMA technology was deployed in only a few countries. Besides, experimentation had shown that the capacity improvement factor of CDMA was smaller than expected. In the mid 1990s when the first deployment of CDMA technology started in the United States, most companies were subsidizing the cost to stay in race with TDMA and analog alternatives. However, from day one, the quality of voice using CDMA was superior to that of TDMA systems installed in the United States. As a result, CDMA service providers under banners like "you cannot believe your ears" started

marketing this technology in the United States, which soon became very popular with the users. Meanwhile, with the huge success of digital cellular all manufacturers worldwide started working on the next generation IMT-2000 wireless networks. Most of these manufacturers adopted wideband CDMA (W-CDMA) as the technology of choice for the IMT-2000, assuming that W-CDMA eases integration of services, provides better quality of voice, and supports higher capacity.

The local voice-oriented wireless applications started with the introduction of the cordless telephone, which appeared in the market in the late 1970s. A cordless telephone provides a wireless connection to replace the wire between the handset and the telephone set. The technology for implementation of a cordless telephone is similar to the technology used in walkie-talkies which had existed since the Second World War. The important feature of the cordless telephone was that as soon as it was introduced to the market it became a major commercial success, selling tens of millions of units and generating an income exceeding several billion dollars. The success of the cordless telephone encouraged further developments in this field. The first digital cordless telephone was CT-2, a standard developed in the United Kingdom in the early 1980s. The next generation of cordless telephones was the wireless PBX using the digital European cordless telephone (DECT) standard. Both CT-2 and DECT had minimal network infrastructures to go beyond the simple cordless telephone and cover a larger area and multiple applications. However, in spite of the huge success of the cordless telephone, neither CT-2 nor DECT has yet been considered a very commercially successful system. These local systems soon evolved into PCS, which was a complete system with its own infrastructure, very similar to the cellular mobile telephone.

In the technical communities of the early 1990s, PCS systems were differentiated from the cellular systems as presented in Figure 1.5(b). A PCS service was considered the next generation cordless telephone designed for residential areas, providing a variety of services beyond the cordless telephone. The first real deployment of PCS systems was the personal handy phone (PHP), later renamed as personal handy system (PHS), introduced in Japan in 1993. At that time, the technical differences between PCS services and cellular systems were perceived to be smaller cell size, better quality of speech, lower tariff, lesser power consumption, and lower mobility. However, from the user's point of view the terminals and services for PCS and cellular looked very similar; the only significant differences were marketing strategy and the way that they were introduced to the market. For instance, around the same time in the United Kingdom DCS-1800 services were introduced as PCS services. The DCS-1800 was using GSM technology at a higher frequency of 1,800 MHz, but it employed a different marketing strategy. The last PCS standard was the personal access communications system (PACS) in the United States, finalized in 1995. All together, none of the PCS standards became a major commercial success or a competitor with cellular services.

In 1995, the Federal Communications Commission (FCC) in the United States auctioned the frequency bands around 2 GHz as the PCS bands, but PCS-specific standards were not adopted for these frequencies. Eventually the name PCS started to appear only as a marketing pitch by some service providers for digital cellular services, in some cases not even operating at PCS bands. Although the more advanced and complex PCS services evolving from simple cordless telephone application did not succeed and were merged into the cellular telephone industry,

the simple cordless telephone industry itself still remains active. In more recent years, the frequency of operation of cordless telephone products has shifted into unlicensed industrial, scientific, and medical (ISM) bands rather than the licensed PCS bands. Cordless telephones in the ISM bands can provide a more reliable link using spread spectrum technology.

1.1.5 Evolution of Data-Oriented Wireless Networks

Table 1.2 provides the chronology of data-oriented wireless networks. As shown in Figure 1.5(b), data-oriented wireless networks are divided into the wide area wireless data and local broadband and ad hoc networks. Wireless local networks support higher data rates and ad hoc operation for a lower number of users. The broadband wireless local networks are usually referred to as WLANs and the ad hoc local networks as WPANs. The concept of WLANs was first introduced around 1980. However, the first WLAN products were completed about 10 years later. Today a key feature of the local broadband and ad hoc networks is operation in the unlicensed bands. The first unlicensed bands were the ISM bands released in the United States in 1985. Later in 1994 and then in 1997, unlicensed PCS and U-NII (Unlicensed National Information Infrastructure) bands were also released in the United States. The major WLAN standard is the IEEE 802.11 started in the late 1980s and completed in 1997. The IEEE 802.11 and 802.11b operate in the ISM bands and the IEEE 802.11a in the U-NII bands. The competing European standard for WLANs is the HIgh PErformance Radio LAN (HIPERLAN). The HIPERLAN-1 was completed in 1997, and the HIPERLAN-2 is currently under development. In 1996, the wireless ATM working group of the ATM (Asynchronous Transfer Mode) Forum was formed to merge ATM technology with wideband local access. More recently, after the announcement of Bluetooth technology in 1998, WPANs have attracted tremendous attention. The coverage of WPANs is

Table 1.2 History of Data-Oriented Wireless Networks

Date	Event
1979	Diffused infrared (IBM Rueschlikon Labs—Switzerland)
1980	Spread spectrum using SAW devices (HP Labs—California)
Early 1980s	Wireless modem (Data Radio)
1983	ARDIS (Motorola/IBM)
1985	SM bands for commercial spread spectrum applications
1986	Mobitex (Swedish Telcom and Ericsson)
1990	IEEE 802.11 for Wireless LAN standards
1990	Announcement of wireless LAN products
1991	RAM mobile (Mobitex)
1992	Formation of WINForum
1992	ETSI and HIPERLAN in Europe
1993	Release of 2.4, 5.2, and 17.1–17.3 GHz bands in EU
1993	CDPD (IBM and 9 operating companies)
1994	PCS licensed and unlicensed bands for PCS
1996	Wireless ATM Forum started
1997	U-NII bands released, IEEE 802.11 completed, GPRS started
1998	IEEE 802.11b and Bluetooth announcement
1999	IEEE 802.11a/ HIPERLAN-2 started

IPR2025-01236
Apple EX1025 Page 8

smaller than traditional WLANs, and they are intended for ad hoc environments to interconnect such personal equipment as the laptop, cell phone, and headset together. At the time of this writing, the IEEE 802.11 products generated around half a billion dollars per year. In the past couple of years, huge investments have been poured into WLAN and WPAN chip set developments all over the world. These investments expect sizable incomes from the possible incorporation of WLANs into the prosperous cellular industry and a large WPAN market for consumer products and home networking. A more complete history of WLANs and WPANs is provided in Chapter 10.

Mobile data services were first introduced with the ARDIS (now called DATATAC) project between Motorola and IBM in 1983. The purpose of this network was to allow IBM field crew to operate their portable computers wherever they want to deliver their services. In 1986, Ericsson introduced Mobitex technology, which was an open architecture implementation of the ARDIS. In 1993, IBM and nine operating companies in the United States started the CDPD (cellular digital packet data) project, expecting a huge market by the year 2000. In the late 1990s the GPRS (general packet radio service) data services that are integrated in the successful GSM systems and can support an order of magnitude higher data rates than previous technologies attracted considerable attention. These higher data rates are perceived to be essential for wireless Internet access, the most popular wireless data application. The third generation (3G) cellular systems are planning to provide up to 2 Mbps mobile data service that is substantially higher than the GPRS data rates. These data rates, however, would not have the comprehensive coverage of GPRS. The early mobile data networks, ARDIS and Mobitex, were independent networks owning their infrastructure. As time passed, CDPD overlaid its infrastructure over the AMPS systems, and GPRS was actually integrated within the GSM infrastructure. This gradual assimilation of the mobile data industry into the cellular telephone industry will be completed in the next-generation cellular systems.

With the integration of PCS and mobile data industries in the next-generation cellular systems we see the emergence of two industries: the next-generation traditional cellular systems operating in licensed bands and the local broadband and ad hoc networks operating in unlicensed bands.

1.2 DIFFERENT GENERATIONS OF WIRELESS NETWORKS

It is customary among the cellular telephone manufacturers and service providers to classify wireless communication systems into several generations. The first-generation (1G) systems are voice-oriented analog cellular and cordless telephones. The second-generation (2G) wireless networks are voice-oriented digital cellular and PCS systems and data-oriented wireless WANs and LANs. The third-generation (3G) networks integrate cellular and PCS voice services with a variety of packet-switched data services in a unified network. In parallel to the unified 3G standardization activities, broadband local and ad hoc networks attracted tremendous attention, and they developed their own standards. One of the major current

differences between these two waves is that the 3G systems use licensed bands, and broadband and ad-hoc networks operate in unlicensed bands. The manner in which broadband local access in unlicensed bands and 3G standards in licensed bands may be integrated forms the core of the forthcoming generations of wireless networks.

1.2.1 1G Wireless Standards

Table 1.3 shows the worldwide 1G analog cellular systems. All these systems use two separate frequency bands for forward (from base station to mobile) and reverse (from mobile to base station) links. Such a system is referred to as a frequency division duplex (FDD) scheme. The typical allocated overall band in each direction, for example, for AMPS, TACS, and NMT-900, was 25 MHz in each direction. The dominant spectra of operation for these systems were the 800 and 900 MHz bands. In an ideal situation, all countries should use the same standard and the same frequency bands, however, in practice, as shown in Table 1.3, a variety of frequencies and standards were adopted all over the world. The reason for the different frequencies of operation is that the frequency administration agencies in each country have had previous frequency allocation rulings that restricted the assignment

Table 1.3 Existing 1G Analog Cellular Systems

Standard	Forward Band (MHz)	Reverse Band (MHz)	Channel Spacing (kHz)	Region	Comments
AMPS	824–849	869–894	30	United States	Also in Australia, southeast Asia, Africa
TACS	890–915	935–960	25	EU	Later, bands were allocated to GSM
E-TACS	872–905	917–950	25	UK	
NMT 450	453–457.5	463–467.5	25	EU	
NMT 900	890–915	935–960	12.5	EU	Freq. overlapping; also in Africa and southeast Asia
C-450	450–455.74	460–465.74	10	Germany, Portugal	
RMTS	450–455	460–465	25	Italy	
Radiocom 2000	192.5–199.5 215.5–233.5	200.5–207.5 207.5–215.5	12.5	France	
NTT	165.2–168.4 414.8–418 925–940 915–918.5	169.8–173 424.8–428 870–885 860–863.5	25/6.25 6.25	Japan	First band is nationwide, others regional
JTACS/ NTACS	922–925 915–925 898–901 918.5–922	867–870 860–870 843–846 863.5–867	6.25 25/12.5 25/12.5 12.5	Japan	All are regional

TACS: Total Access Communication System
E-TACS: Enhanced TACS
NTT: Nippon Telephone and Telegraph

choices. The reason for adopting different standards was that at that time cellular providers assumed services to be mainly used in one country, and they did not have a vision for a universal service. The channel spacing or bandwidth allocated to each user was either 30 kHz or 25 kHz or a fraction of either of them. The 25 kHz band was previously used for mobile satellite services and the 30 kHz band was something new used for cellular telephone applications. All the 1G cellular systems were using analog frequency modulation (FM) for which the transmission power requirement depends on the transmission bandwidth. On the other hand, power is also related to the coverage and size of the radios. Therefore, one can compensate for the reduction in transmission bandwidth per user by reducing the size of a cell in a cellular network. Reduction in size of the cell increases the number of cells and the cost of installation of the infrastructure.

Example 1.3: Infrastructure Density versus Channel Size in Analog Cellular Systems

The AMPS system in North America uses 30 kHz band whereas C-450 in Germany uses 10 kHz spacing that is ⅓ of the 30 kHz. Therefore, one expects a heavier infrastructure density for deployment of C-450.

Example 1.4: Cell Size and Channel Bandwidth in Analog Cellular Systems

The Japanese use 25 kHz, 12.5 kHz, and 6.25 kHz bands in their systems that support the entire band, ½, and ¼ of the band, respectively. The size of the cells for split-band operation is smaller than the size for full-band operation.

Band splitting obviously allows more subscribers at the expense of more investment in the infrastructure. In Chapter 5, where we address deployment of the cellular networks, we introduce a technique to improve the capacity of a cellular network with the same number of base stations using band splitting.

In the cellular industry, often 1G only refers to analog cellular systems because it is the only system implemented based on popular standards such as AMPS or NMT. However, we can generalize the 1G systems to other sectors of the wireless services. The analog cordless telephone that appeared on the market in the 1980s can be considered the 1G cordless telephone. Paging services that were deployed around the same time frame as analog cellular systems and cordless telephones can be referred to as 1G mobile data services providing one-way short data messages. In the early 1980s before the release of ISM bands and start of the WLAN industry, a couple of small companies in Canada and the United States developed low-speed connectionless WLANs using voiceband modem chip sets and commercially available walkie-talkies. These products were operating at the speed of voice-band modems (< 9,600 bps) but using medium-access control techniques used in data-oriented LANs. Because of their low speed they do not comply with the IEEE 802 definition of LANs, but one may refer to them as 1G WLAN products.

1.2.2 2G Wireless Systems

The 2G systems supported a complete set of standards for all four sectors of the wireless network industry. As we discussed in the history of voice-oriented and data-oriented networks, we have a number of digital cellular, PCS, mobile data, and WLAN standards and products that can be classified as 2G systems. In the remainder of this section, we cover each of these four sectors of 2G systems in a separate subsection.

1.2.2.1 2G Digital Cellular

Table 1.4 summarizes the major 2G digital cellular standards. There are four major standards in this category: GSM, the pan-European digital cellular, the North American Interim Standard (IS-54) that later on improved into IS-136 and Japanese digital cellular (JDC)—all of them using TDMA technology and IS-95 in North America, which uses CDMA technology. Like the 1G analog systems, the 2G systems are all FDD and operate in the 800–900 MHz bands. The carrier spacing of IS-54 and JDC is the same as the carrier spacing of 1G analog systems in their respective regions, but GSM and IS-95 use multiple analog channels to form one digital carrier. GSM supports eight users in a 200 kHz band; IS-54 and JDC support three users in 30 and 25 kHz bands, respectively. As we explain in Chapter 4, the number of users for CDMA depends on the acceptable quality of service; therefore, the number of users in the 1,250 kHz CDMA channels cannot be theoretically fixed. But this number is large enough to convince the standards organization to adopt CDMA technology for next generation 3G systems. By looking into these numbers, one may jump to the conclusion that GSM uses 25 kHz for each bearer, and IS-54 uses 10 kHz per user. Therefore GSM supports 2.5 times less the number of users in the given bandwidth. The reader should be warned that this is an illusive conclusion because when the network is deployed, the ultimate quality of voice also depends on the frequency reuse factor and signal-to-noise/interference

Table 1.4 2G Digital Cellular Standards

System	GSM	IS-54	JDC	IS-95
Region	Europe/Asia	United States	Japan	United States/Asia
Access method	TDMA/FDD	TDMA/FDD	TDMA/FDD	CDMA/FDD
Modulation scheme	GMSK	π/4-DQPSK	π/4-DQPSK	SQPSK/QPSK
Frequency band (MHz)	935–960 890–915	869–894 824–849	810–826 940–956 1,477–1,489 1,429–1,441 1,501–1,513 1,453–1,465	869–894 824–849
Carrier spacing (kHz)	200	30	25	1,250
Bearer channels/carrier	8	3	3	Variable
Channel bit rate (kbps)	270.833	48.6	42	1,228.8
Speech coding	13 kbps	8 kbps	8 kbps	1–8 kbps (variable)
Frame duration (ms)	4.615	40	20	20

IPR2025-01236
Apple EX1025 Page 10

requirements that will change these calculations significantly. These issues are addressed in Chapter 5.

The channel bit rate of GSM is 270 kbps whereas IS-54 and JDC use 48 and 42 kbps, respectively. Higher channel bit rates of a digital cellular system allow simple implementation of higher data rates for data services. By assigning several voice slots to one user in a single carrier, one can easily increase the maximum supportable data rate for a data service offered by the network. How the higher channel rate of GSM allows support of higher data rates is discussed in Chapter 9, when we discuss GPRS mobile data services. Using a similar argument, one may notice that the 1228.8 kcps channel chip rate of IS-95 provides a good ground for integration of higher data rates into IS-95. This fact has been exploited in IMT-2000 systems to support data rates up to 2 Mbps.

The speech coding technique of 2G systems are all around 10 kbps. As shown in Table 1.4, cellular standards assume large cell sizes and a large number of users per cell, which necessitates lower speech coding rates. On the other hand, cellular standards were assuming operation in cars for which power consumption and battery life were not issues. The peak transmission power of the mobile terminals in these standards can be between several hundreds of mW up to 1W [PAH95] and on the average they consume around 100 mW. All of these systems employ central power control, which reduces battery power consumption and helps in controlling the interference level. In digital communications, information is transmitted in packets or frames. The duration of a packet/frame in the air should be short enough so that the channel does not change significantly during the transmission and long so that the required time interval between packets is much smaller than the length of the packet. A frame length of around 5 to 40 ms is typically used in 2G networks.

1.2.2.2 2G PCS

As we discussed in the history of wireless voice-oriented networks, the 2G PCS standards evolved out of the 1G analog cordless telephone industry and merged into the 3G cellular systems. Figure 1.5(a) illustrates the difference between these two industries during the evolution of the 2G networks; before they

Table 1.5 Quantitative Comparison of PCS and Cellular Philosophies

System Aspects	PCS	Cellular
Cell size	5–500 m	0.5–30 km
Coverage	Zonal	Comprehensive
Antenna height	< 15 m	> 15 m
Vehicle speed	< 5 kmph	< 200 kmph
Handset complexity	Low	Moderate
Base station complexity	Low	High
Spectrum access	Shared	Exclusive
Average handset power	5–10 mW	100–600 mW
Speech coding	32 kb/s ADPCM	7–13 kb/s vocoder
Duplexing	Usually TDD	FDD
Detection	Non-coherent	Coherent

were integrated into one in 3G systems. Table 1.5 illustrates a more quantitative comparison of PCS and cellular industries that at the time was used to justify the existence of two separate voice-oriented standards. The basic philosophy was that PCS is for residential applications, the cell size is small, coverage is zonal, antennas are installed on existing posts (such as electricity or telephone posts), it is not designed to be used in the car, and the complexity of the handset and base station is low. These standards preferred 32 kbps speech coding to support wireline quality and shared the same spectrum in different zones; time-division-duplex (TDD) and noncoherent modulation techniques were mostly used to support simpler implementation.

Table 1.6 provides a summary of the specifications of the four major PCS standards. CT-2 and CT-2+ were the first digital cordless telephone standards; PHS, which later on became PHP, was the first and the only nationwide deployment of these systems; and PACS is the last standard developed with this philosophy. Except for CT-2+ all these standards were designed for 1.8 and 1.9 GHz frequency bands, which are commonly referred to as PCS bands; all systems use TDMA/TDD except PACS, which adopted FDD. To support wireline quality of voice, speech coding at 32 kbps is used in all of these standards. This rate is around three times higher than the speech coding rate of digital cellular systems. The carrier bit rate of 1,728 kbps in DECT is even higher than GSM, which had the highest carrier rate of all TDMA digital cellular systems. This carrier bit rate is even higher than the chip rate in IS-95, the 2G CDMA standard. This feature provides an edge to DECT in supporting high-speed data connections for Internet access. Perhaps this is the major reason why DECT is the only PCS standard that is still considered in new technologies like HomeRF. The power consumption of PCS standards is almost one order of magnitude less than that of the digital cellular standards because PCS systems are designed for smaller cells. If digital cellular systems were deployed with the same cell sizes, the average power consumption could be comparable to PCS systems. Modulation techniques used for PCS standards, GFSK and DQPSK, are less bandwidth efficient and more power efficient than modulation schemes used in digital cellular systems. These modulation techniques can be implemented with simpler noncoherent receivers reducing the size of the handset. The shorter propagation

Table 1.6 2G PCS Standards

System	CT-2 and CT-2(+)	DECT	PHS	PACS
Region	Europe/Canada	Europe	Japan	United States
Access Method	TDMA/TDD	TDMA/TDD	TDMA/TDD	TDMA/FDD
Frequency band (MHz)	864–868 944–948	1,880–1,900	1,895–1,918	1,850–1,910 1,930–1,990
Carrier spacing (kHz)	100	1,728	300	300
Bearer channels/carrier	1	12	4	8 per pair
Channel bit rate (kbps)	72	1,152	384	384
Modulation	GFSK	GFSK	$\pi/4$-DQPSK	$\pi/4$-DQPSK
Speech coding (kbps)	32	32	32	32
Average handset Tx power (mW)	5	10	10	25
Peak handset Tx power (mW)	10	250	80	200
Frame duration (ms)	2	10	5	2.5

time for the smaller-cell PCS standards allows shorter packet frames which help the quality of voice in spite of the wireless channel impairments.

1.2.2.3 Mobile Data Services

As shown in Figure 1.5(b), mobile data services provide moderate data rate and wide coverage area access to packet-switched data networks. The mobile data networks emerged after the success of the paging industry to provide a two-way connection for larger messages. Table 1.7 provides a comparison among a number of important mobile data services. ARDIS and Mobitex use their own frequency bands in 800–900 MHz, terrestrial European trunked radio (TETRA) uses its own band at 300 MHz, CDPD shares the AMPS bands and site infrastructure, GPRS shares the GSM's complete radio system, and Metricom uses the unlicensed ISM bands. The early systems, ARDIS, Mobitex, and CDPD, were developed before the popularity of the Internet, and the dominant design criteria was coverage and cost rather than data rate. These systems were a wireless replacement for voice-band modems operating at data rates up to 19.2 kbps, which was the rate of modems at that time. TETRA is designed for pan-European civil service application and has its own features for that purpose. Metricom and GPRS support data rates more suitable for Internet access. The advantage of GPRS is that it is incorporated in the popular GSM digital services with large numbers of terminals all over the world. Except for Metricom, the channel spacing of the rest of the mobile data services is based on the channel spacing of cellular telephone networks with 25 or 30 kHz bands or a fraction (12.5 kHz) or a multiple of them (200 kHz). These services are designed to use multiple carriers in an FDMA format and use different versions of random access techniques such as DSMA, BTMA, or ALOHA, which are explained in Chapter 4. Modulation techniques for these systems are like digital cellular and PCS systems explained in Chapter 3. A more detailed comparison of mobile data services is provided in Chapter 9.

1.2.2.4 WLANs

As shown in Figure 1.5(b), WLANs provide high data rates (minimum of 1 Mbps) in a local area (< 100 m) to provide access to wired LANs and the Internet. Today all successful WLANs operate in unlicensed bands that are free of charge

Table 1.7 Mobile Data Services

System	ARDIS	Mobitex	CDPD	TETRA	GPRS	Metricom
Frequency band (MHz)	800 bands 45 kHz sep	935–940 896–961	869–894 824–849	380–383 390–393	890–915 935–960	902–928 ISM bands
Channel bit rate (kbps)	19.2	8.0	19.2	36	200	100
RF channel spacing	25 kHz	12.5 kHz	30 kHz	25 kHz	200 kHz	160 kHz
Channel access/ Multiuser access	FDMA/ DSMA	FDMA/ Dynamic S-ALOHA	FDMA/ DSMA	FDMA/ DSMA	FDMA/ TDMA/ Reservn.	FHSS/ BTMA
Modulation technique	4-FSK	GMSK	GMSK	$\pi/4$-QPSK	GMSK	GMSK

Table 1.8 Wireless LAN Standards

Parameters	IEEE 802.11	IEEE 802.11b	IEEE 802.11a	HIPER-LAN/2	HIPER-LAN/1
Status	Approved, Products	Products	Approved, Products in development	Approved	Approved, No products
Freq. Band	2.4 GHz	2.4 GHz	5 GHz	5 GHz	5 GHz
PHY, modulation	DSSS: FHSS:	DSSS: CCK	OFDM	OFDM	GMSK
Data rate	1, 2 Mbps	1, 2, 5.5, 11 Mbps	6, 9, 12, 18, 24, 36, 54 Mbps		23.5 Mbps
Access method	Distributed control, CSMA/CA or RTS/CTS			Central control; reservation-based access	Active contention resolution; priority signaling

and rigorous regulations. Considering that PCS bands were auctioned at very high prices, in the past few years WLANs have attracted a renewed attention. Table 1.8 provides a summary of the IEEE 802.11 and HIPERLAN standards for WLANs. IEEE standards include 802.11 and 802.11b operating at 2.4 GHz and 802.11a, which operates at 5 GHz. Both HIPERLAN-1 and -2, developed under the European Telecommunication Standards Institute (ETSI), operate at 5 GHz. The 2.4 GHz products operate in ISM bands using spread spectrum technology to support data rates ranging from 1 to 11 Mbps. HIPERLAN-1 uses GMSK modulation with signal processing at the receiver that supports up to 23.5 Mbps. IEEE 802.11a and HIPERLAN-2 use the orthogonal frequency division multiplexing (OFDM) physical layer to support up to 54 Mbps. The access method for all 802.11 standards is the same and includes CSMA/CA, PCF, and RTS/CTS, which are described in Chapters 4 and 11. The access method of the HIPERLAN-1 is on the lines of the 802.11, but the access method for HIPERLAN-2 is a voice-oriented access technique that is suitable for integration of voice and data services. The details of these transmission techniques and access methods are described in Chapters 3 and 4. IEEE 802.11, IEEE 802.11b, and HIPERLAN-1 are completed standards, and IEEE 802.11 and 11.b are today's dominant products in the market. IEEE 802.11a and HIPERLAN-2 are still under development. The IEEE 802.11 and HIPERLAN-1 standards can be considered 2G wireless LANs. The OFDM wireless LANs are forming the next generation of these products. The last four chapters of this book are focused on wideband local access systems which describe these systems in further detail.

1.2.3 3G and Beyond

The purpose of migration to 3G networks was to develop an international standard that combines and gradually replaces 2G digital cellular, PCS, and mobile data services. At the same time, 3G systems were expected to increase the quality of the voice, capacity of the network, and data rate of the mobile data services. Among

IPR2025-01236
Apple EX1025 Page 12

several radio transmission technology proposals submitted to the International Telecommunication Union (ITU), the dominant technology for 3G systems was W-CDMA, which is discussed in detail in Chapter 11. Outside the 3G standards, WLAN and WPAN standards are forming the future for the broadband and ad hoc wireless networks. Figure 1.6 illustrates the relative coverage and data rates of 2G, 3G, WLAN, and WPANs. WPANs, studied in Chapter 13, are formed under the IEEE 802.15 standard. This community has adopted Bluetooth technology as its first standard. Bluetooth is a new technology for ad hoc networking which was introduced in 1998. Like WLANs, ad hoc Bluetooth-type technologies operate in unlicensed bands. Bluetooth operates at lower data rates than WLANs but uses a voice-oriented wireless access method that provides a better environment for integration of voice and data services. The WPAN ad hoc networking technologies are designed to allow personal devices such as laptops, cellular phones, headsets, speakers, and printers to connect together without any wiring.

From the point of view of cellular service providers, 3G provides multimedia services to users everywhere, WLANs provide broadband services in hot spots where a short proximity is needed, and WPANs connect the personal devices together. The telecommunications industry is a multidisciplinary industry, and it has always been difficult to predict its future. However, there are certain current trends that one may perceive as important. In terms of frequency of operation, 3G systems use licensed bands whereas WLANs and WPANs use unlicensed bands. Unlicensed bands are wider and free of charge and rigorous rules, but there is no regulation to control the interference in these bands. Some researchers and visionaries have gone too far to state that the future is "everything unlicensed," but it is safer to say that recent years have witnessed an immense growth of hope for an increase in using unlicensed bands. Wideband CDMA is the dominant transmission technology for 3G systems and OFDM is becoming very popular in broadband WLANs operating in 5 GHz. Again some visionaries also state that the next-generation systems will be based on OFDM; however, it is safe to say that OFDM appears to play an increasing role in the future of broadband wireless access. Another important evolving technology is the ultra wide band (UWB) which is expected to support a myriad of users with noiselike impulses with a spectrum spreading over several GHz [SCH00]. We address this evolving technology in Chapter 3. There are some visionaries who predict that UWB may be the next step to OFDM, but it is safe to state that it is an evolving, promising technology. Another evolving technology is position finding, in particular in indoor areas, which is becoming an integral part of the wireless networks for the next generations. We address location finding in the last chapter of this book. The FCC in the United States has already mandated the integration of position location systems with cellular systems; however, the extent and method of integration is not yet clear.

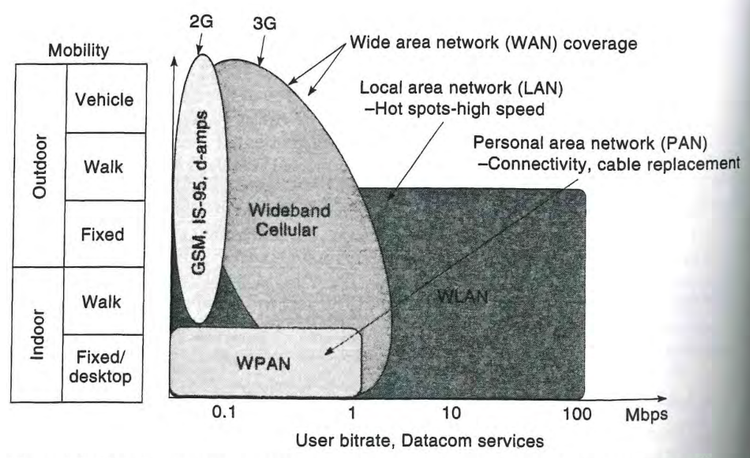

Figure 1.6 Relative coverage, mobility, and data rates of generations of cellular systems and local broadband and ad hoc networks.

1.3 STRUCTURE OF THE BOOK

Wireless networks are very complex multidisciplinary systems; to describe these networks, we need to divide the details into several categories to create a logical organization for presentation of important material. This book is organized in five sections: one introduction chapter and four parts. The introductory material presented in Chapter 1 defines the meaning and sketches the path of evolution of the wireless networks. This chapter also provides an overview of the important wireless systems and outlines the details of the rest of the book. The material presented in Chapter 1 identifies different sectors of the wireless market, familiarizes the reader with the forces behind the growth of these sectors, and provides an overview of the standards developed to address them. The material presented in Chapter 1 should motivate the reader to study the details provided in the remainder of the book.

Each of the four parts of the book consists of several chapters directed toward the description of certain aspects of wireless networks. Parts One and Two are devoted to the principles of wireless network operations. These parts provide the technical background needed for understanding wireless networks. The technical aspects are either related to the design of the air-interface or issues related to deployment and operation of the infrastructure. Part One consists of three chapters describing technical aspects of the air-interface. Part Two has two chapters devoted to the technical aspects of the wireless network infrastructure. Parts Three and Four are devoted to describing the details of typical wireless networks in a comparative manner. Part Three consists of three chapters describing both voice- and data-oriented wireless WANs. Part Four consists of four chapters on local broadband and ad hoc wireless networks, including WLAN, WPAN, and indoor positioning.

IPR2025-01236
Apple EX1025 Page 13