US 20080155268A1

(19) United States

(12) Patent Application Publication

Jazayeri et al.

(10) Pub. No.: US 2008/0155268 A1

(43) Pub. Date: Jun. 26, 2008

(54) SECURE DATA VERIFICATION VIA BIOMETRIC INPUT

(75) Inventors: **Mehdi Jazayeri**, Atherton, CA (US); **Jeremy Isaac Nathaniel Werner**, San Jose, CA (US); **Kiran Madhav**, Sunnyvale, CA (US)

Correspondence Address:
AMIN, TUROCY & CALVIN, LLP
1900 EAST NINTH STREET, 24TH FLOOR, NATIONAL CITY CENTER
CLEVELAND, OH 44114

(73) Assignee: **SPANSION LLC**, Sunnyvale, CA (US)

(21) Appl. No.: **11/613,627**

(22) Filed: **Dec. 20, 2006**

Publication Classification

(51) **Int. Cl.**
H04L 9/32 (2006.01)

(52) **U.S. Cl.** **713/186**

(57) **ABSTRACT**

An architecture is presented that controls access to secure data via biometric verification. The system comprises a memory module that communicates with biometric data to establish a heightened level of security for controlling access to data stored in the non-volatile memory. The memory module includes a security processor, non-volatile memory, and volatile memory. The security processor provides for concurrent processing of security protocols, provides a secure execution environment within the memory module to evaluate and store biometric data, communicates with the biometric data sensors to fetch the biometric data, and analyzes the biometric data to control access to data stored in the non-volatile memory. Specifically, biometric data is input and communicated to the security processor, then compared against the existing biometric templates stored in the non-volatile memory. If the data matches, verification is sent to the external processor and the user is granted access to the secure assets.

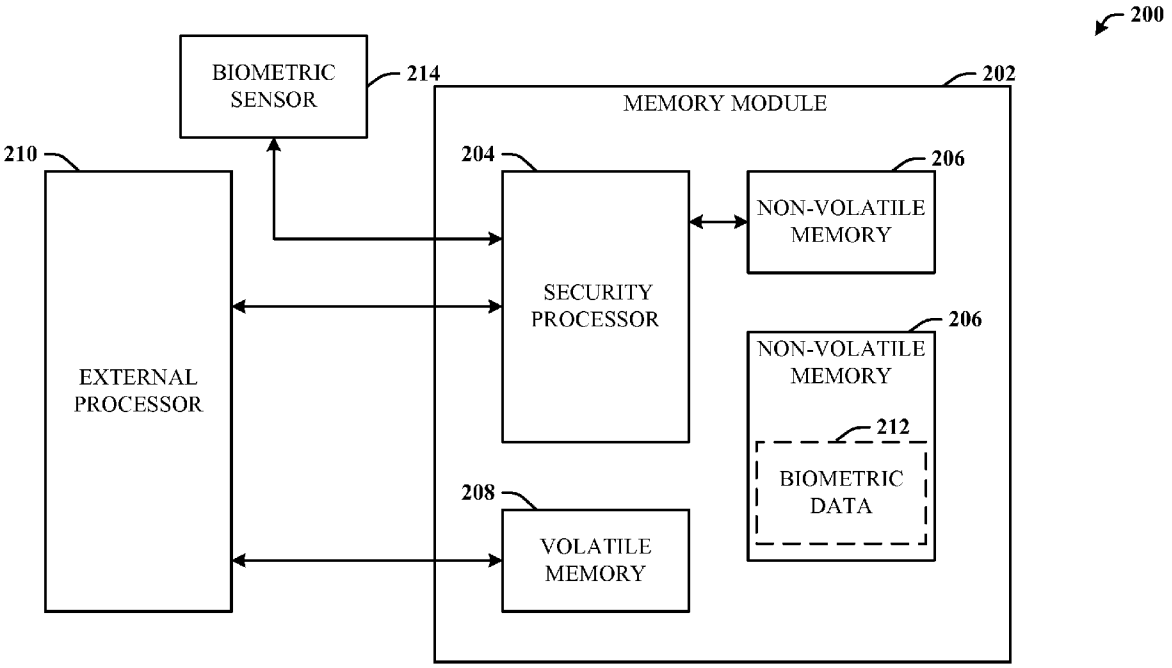

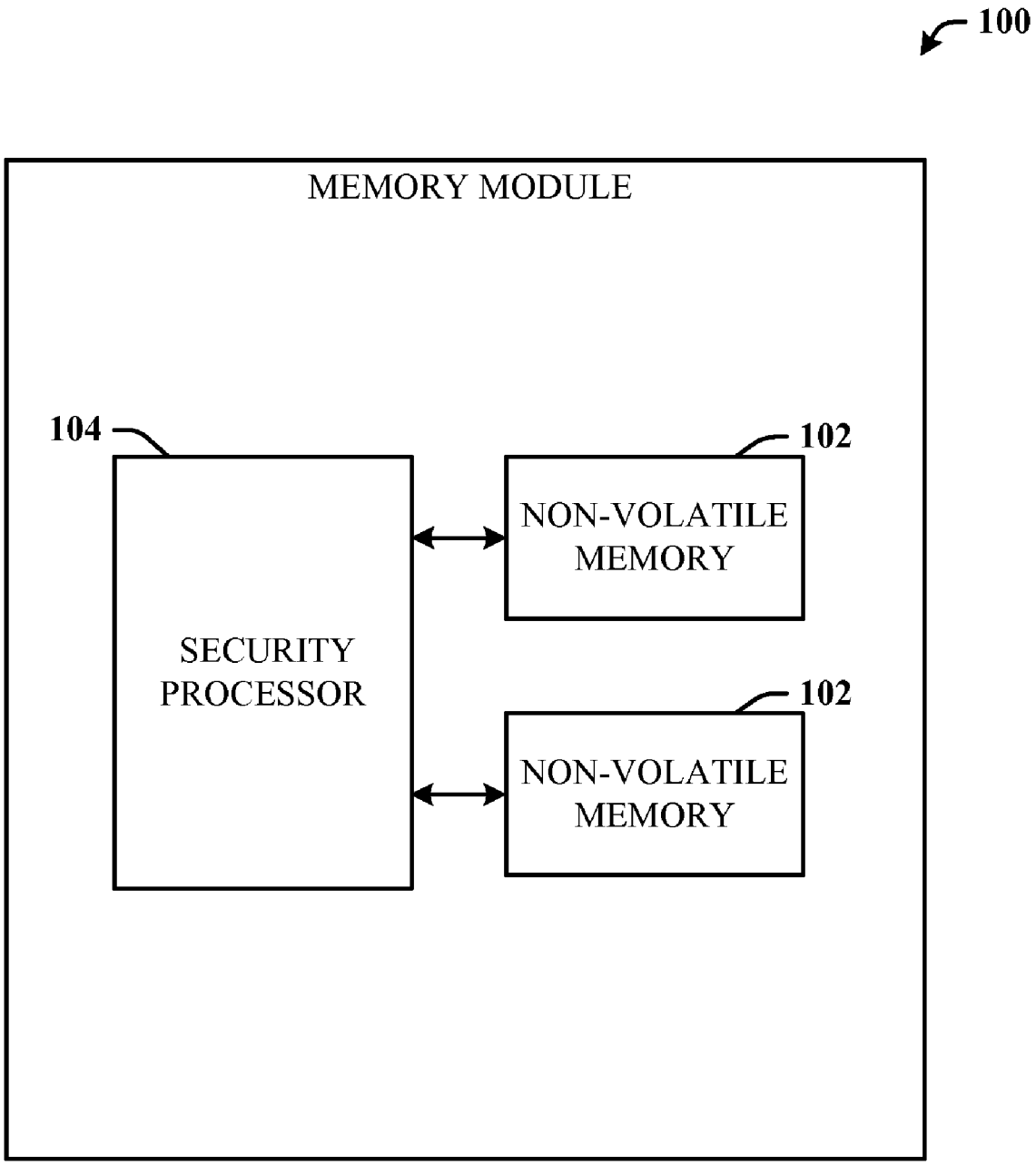
100
MEMORY MODULE
104
SECURITY PROCESSOR
102
NON-VOLATILE MEMORY
102
NON-VOLATILE MEMORY

FIG. 1

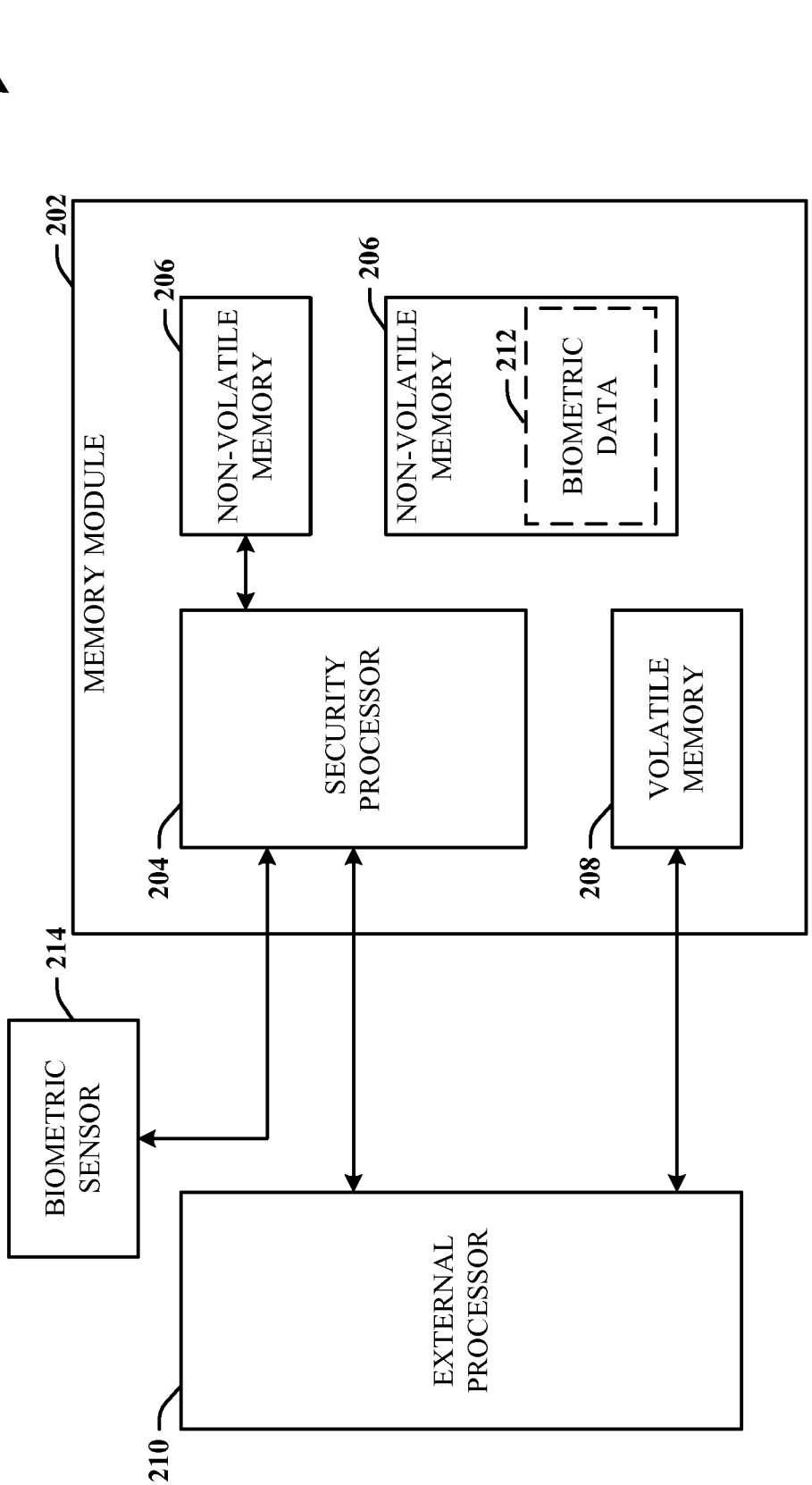
200
202
MEMORY MODULE
206
NON-VOLATILE MEMORY
206
NON-VOLATILE MEMORY
212
BIOMETRIC DATA
204
SECURITY PROCESSOR
208
VOLATILE MEMORY
214
BIOMETRIC SENSOR
210
EXTERNAL PROCESSOR

FIG. 2

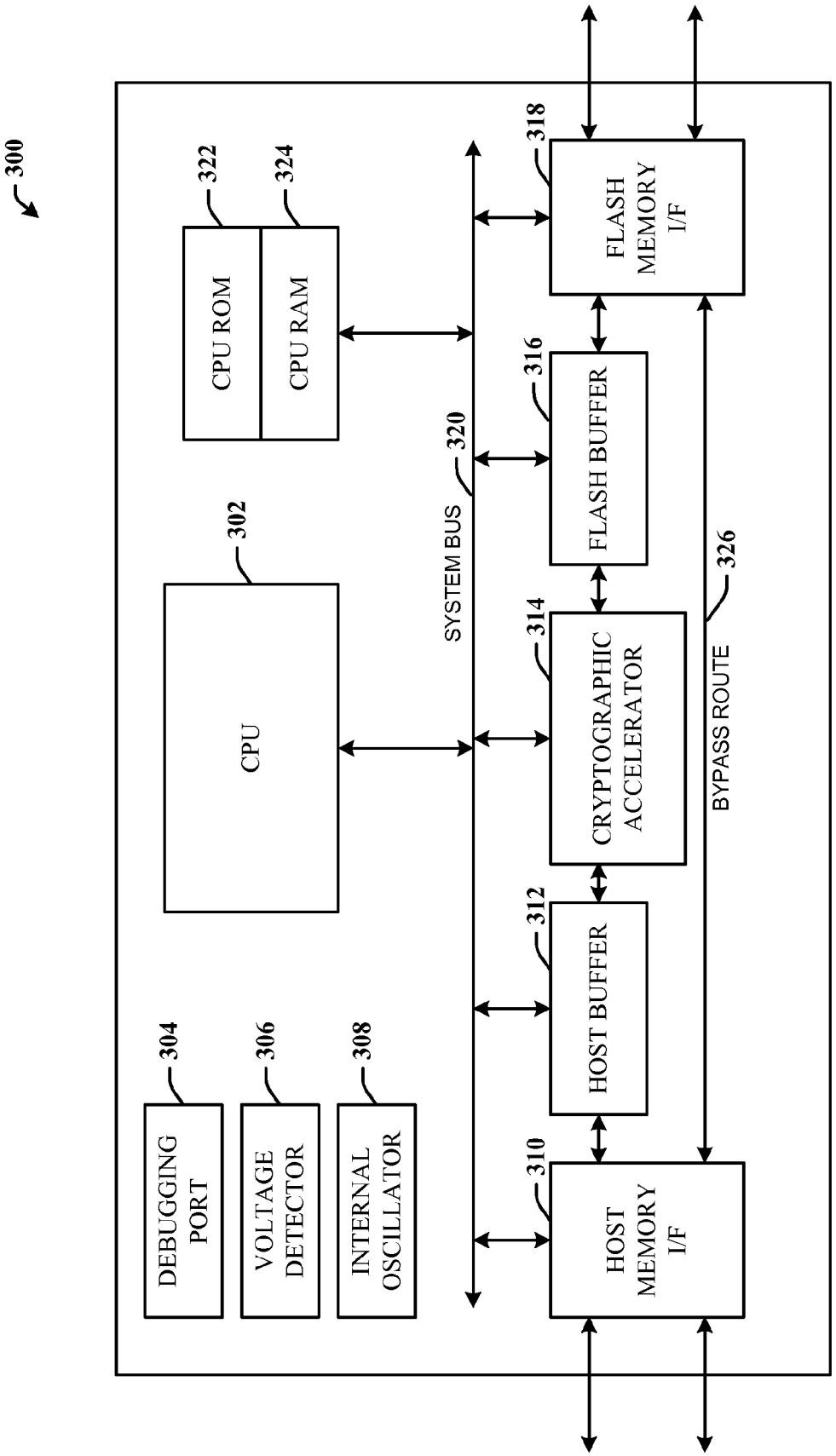
300
CPU ROM
322
CPU RAM
324
CPU
302
DEBUGGING PORT
304
VOLTAGE DETECTOR
306
INTERNAL OSCILLATOR
308
SYSTEM BUS
320
FLASH MEMORY I/F
318
FLASH BUFFER
316
CRYPTOGRAPHIC ACCELERATOR
314
HOST BUFFER
312
HOST MEMORY I/F
310
BYPASS ROUTE
326

FIG. 3

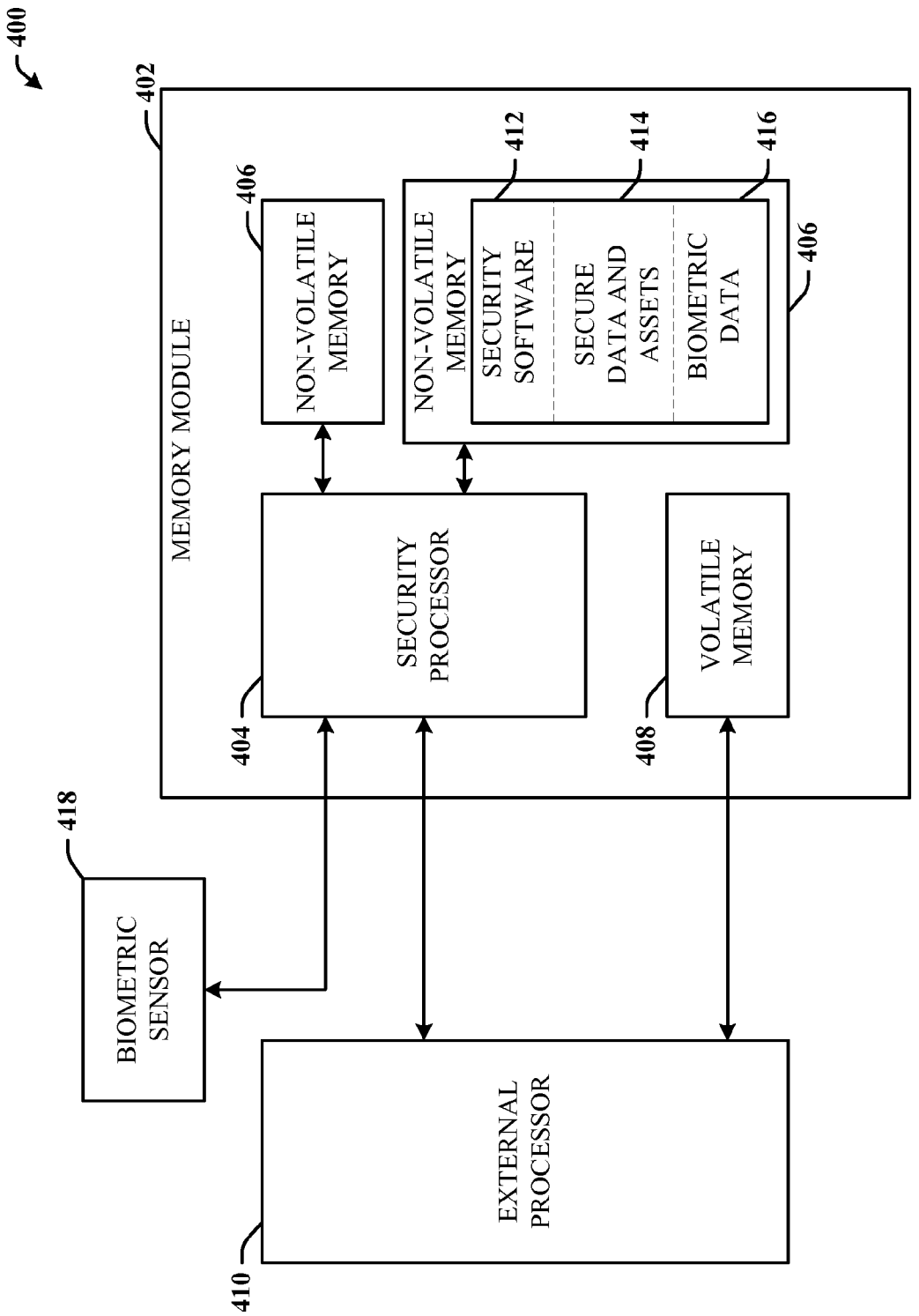
400
402
MEMORY MODULE
406
NON-VOLATILE MEMORY
NON-VOLATILE MEMORY
412
414
416
SECURITY SOFTWARE
SECURE DATA AND ASSETS
BIOMETRIC DATA
406
SECURITY PROCESSOR
404
VOLATILE MEMORY
408
418
BIOMETRIC SENSOR
EXTERNAL PROCESSOR
410

FIG. 4

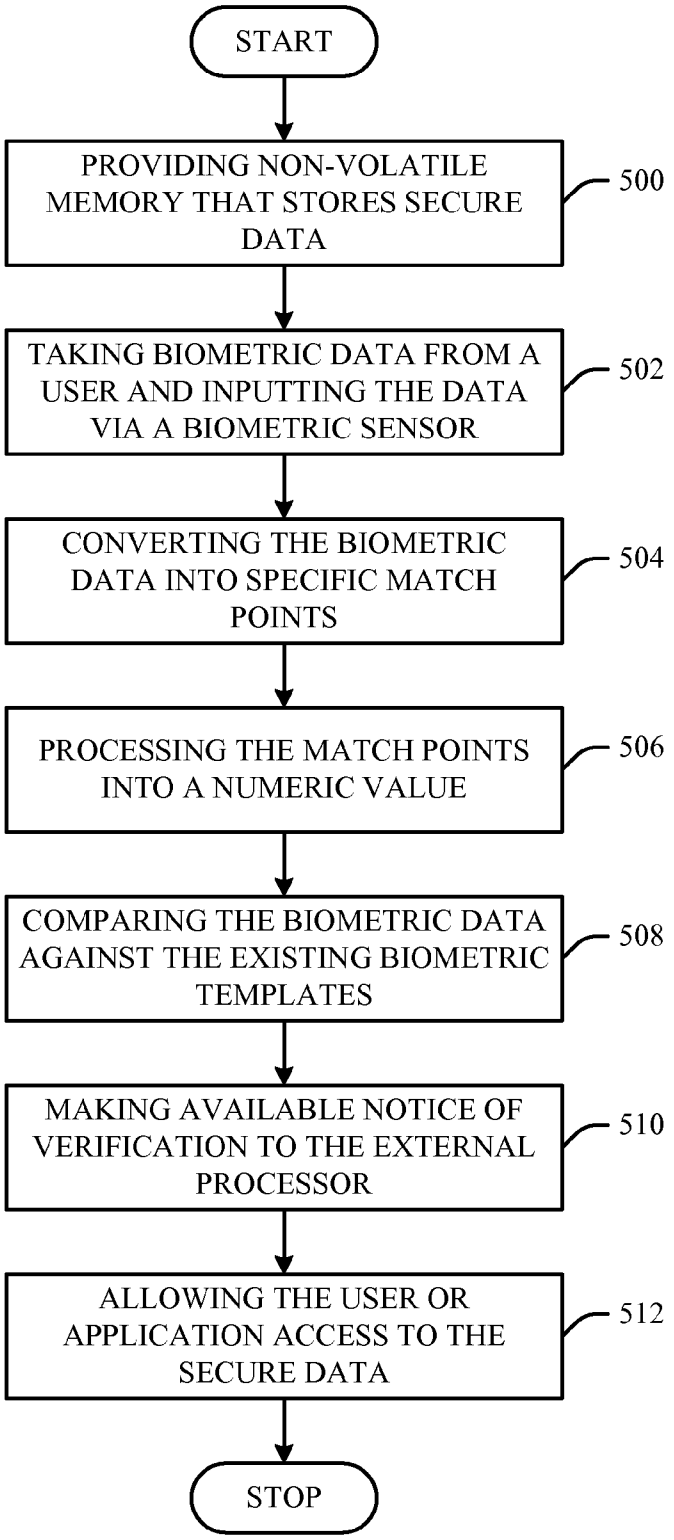
START
PROVIDING NON-VOLATILE MEMORY THAT STORES SECURE DATA
500
TAKING BIOMETRIC DATA FROM A USER AND INPUTTING THE DATA VIA A BIOMETRIC SENSOR
502
CONVERTING THE BIOMETRIC DATA INTO SPECIFIC MATCH POINTS
504
PROCESSING THE MATCH POINTS INTO A NUMERIC VALUE
506
COMPARING THE BIOMETRIC DATA AGAINST THE EXISTING BIOMETRIC TEMPLATES
508
MAKING AVAILABLE NOTICE OF VERIFICATION TO THE EXTERNAL PROCESSOR
510
ALLOWING THE USER OR APPLICATION ACCESS TO THE SECURE DATA
512
STOP

FIG. 5

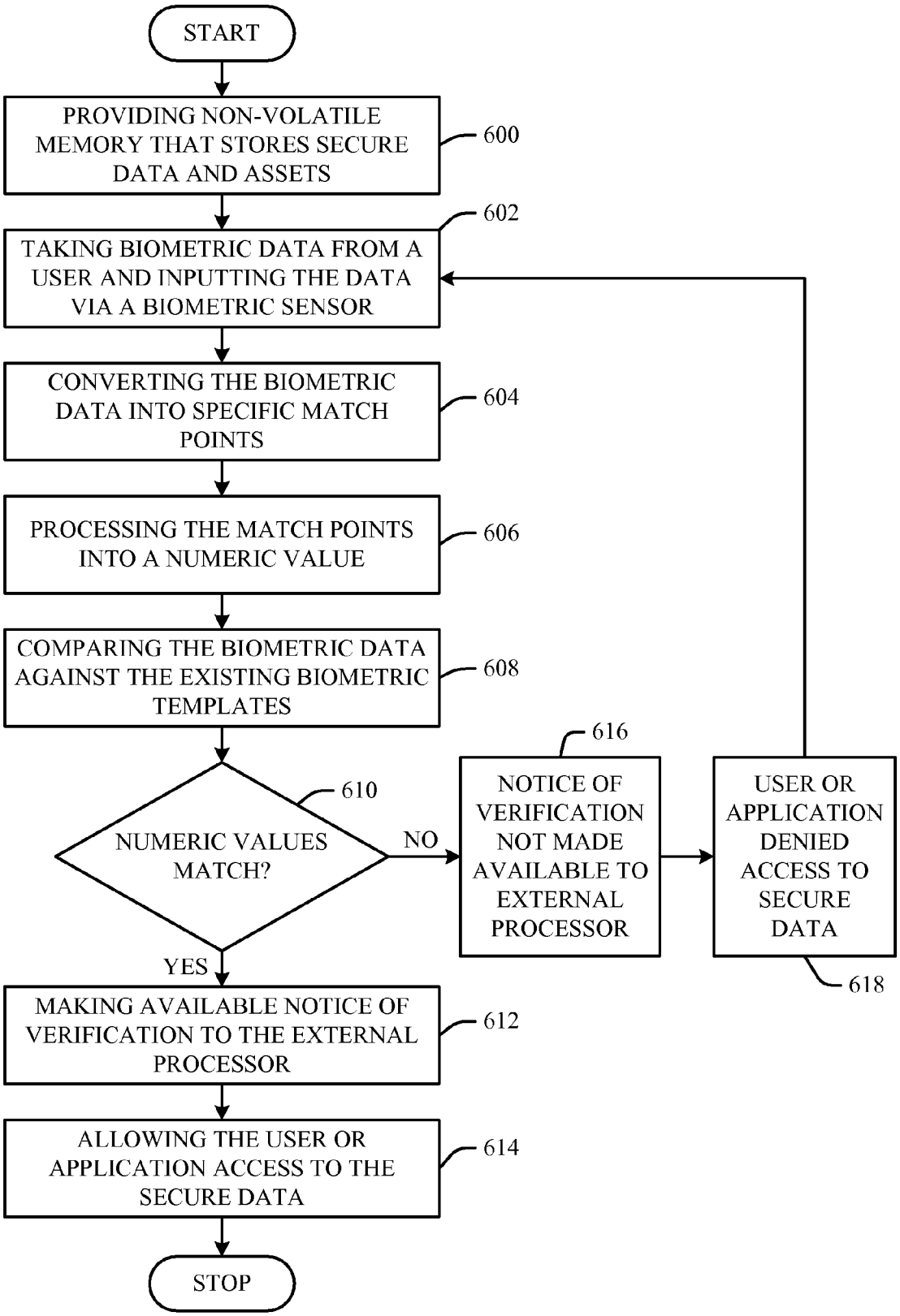
START
PROVIDING NON-VOLATILE MEMORY THAT STORES SECURE DATA AND ASSETS
600
TAKING BIOMETRIC DATA FROM A USER AND INPUTTING THE DATA VIA A BIOMETRIC SENSOR
602
CONVERTING THE BIOMETRIC DATA INTO SPECIFIC MATCH POINTS
604
PROCESSING THE MATCH POINTS INTO A NUMERIC VALUE
606
COMPARING THE BIOMETRIC DATA AGAINST THE EXISTING BIOMETRIC TEMPLATES
608
NUMERIC VALUES MATCH?
610
NO
YES
NOTICE OF VERIFICATION NOT MADE AVAILABLE TO EXTERNAL PROCESSOR
616
USER OR APPLICATION DENIED ACCESS TO SECURE DATA
618
MAKING AVAILABLE NOTICE OF VERIFICATION TO THE EXTERNAL PROCESSOR
612
ALLOWING THE USER OR APPLICATION ACCESS TO THE SECURE DATA
614
STOP

FIG. 6

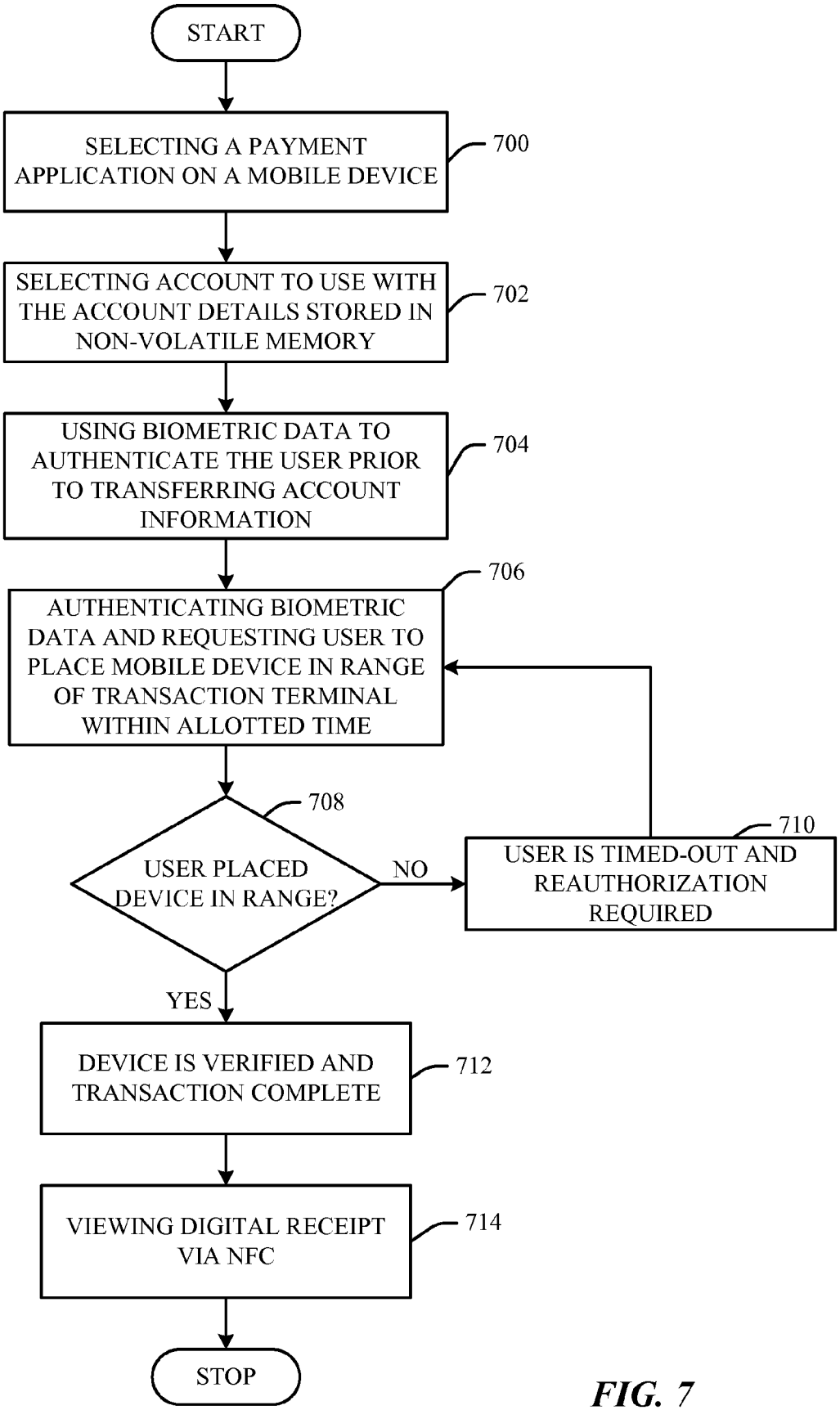
START
SELECTING A PAYMENT APPLICATION ON A MOBILE DEVICE
700
SELECTING ACCOUNT TO USE WITH THE ACCOUNT DETAILS STORED IN NON-VOLATILE MEMORY
702
USING BIOMETRIC DATA TO AUTHENTICATE THE USER PRIOR TO TRANSFERRING ACCOUNT INFORMATION
704
706
AUTHENTICATING BIOMETRIC DATA AND REQUESTING USER TO PLACE MOBILE DEVICE IN RANGE OF TRANSACTION TERMINAL WITHIN ALLOTTED TIME
708
USER PLACED DEVICE IN RANGE?
NO
710
USER IS TIMED-OUT AND REAUTHORIZATION REQUIRED
YES
DEVICE IS VERIFIED AND TRANSACTION COMPLETE
712
VIEWING DIGITAL RECEIPT VIA NFC
714
STOP

FIG. 7

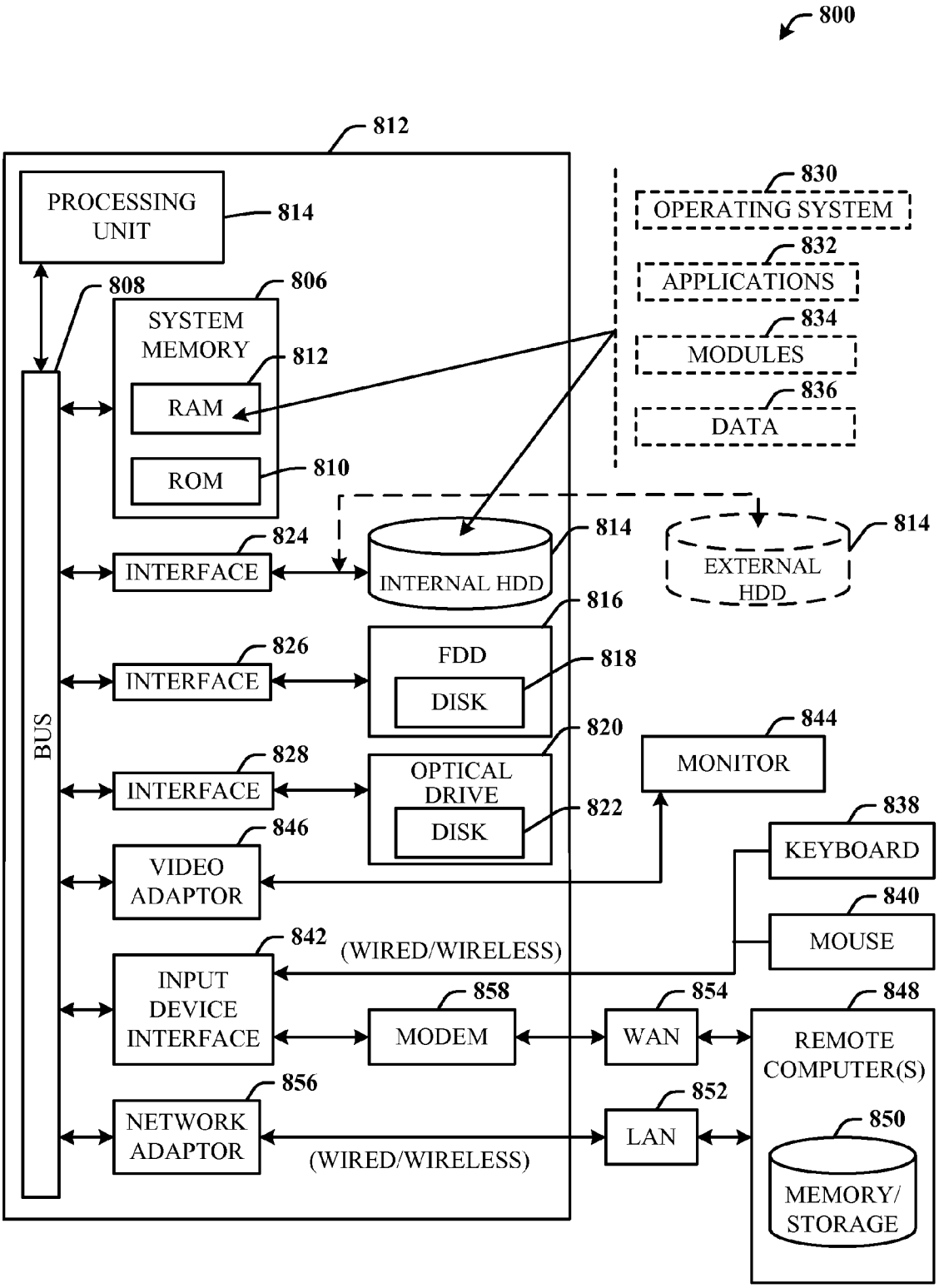
800
812
PROCESSING UNIT
814
808
806
SYSTEM MEMORY
812
RAM
ROM
810
BUS
830
OPERATING SYSTEM
832
APPLICATIONS
834
MODULES
836
DATA
824
INTERFACE
INTERNAL HDD
814
EXTERNAL HDD
814
816
826
INTERFACE
FDD
DISK
818
820
828
INTERFACE
OPTICAL DRIVE
DISK
822
844
MONITOR
838
KEYBOARD
846
VIDEO ADAPTOR
840
MOUSE
842
(WIRED/WIRELESS)
INPUT DEVICE INTERFACE
858
MODEM
854
WAN
848
REMOTE COMPUTER(S)
856
NETWORK ADAPTOR
(WIRED/WIRELESS)
852
LAN
850
MEMORY/ STORAGE

FIG. 8

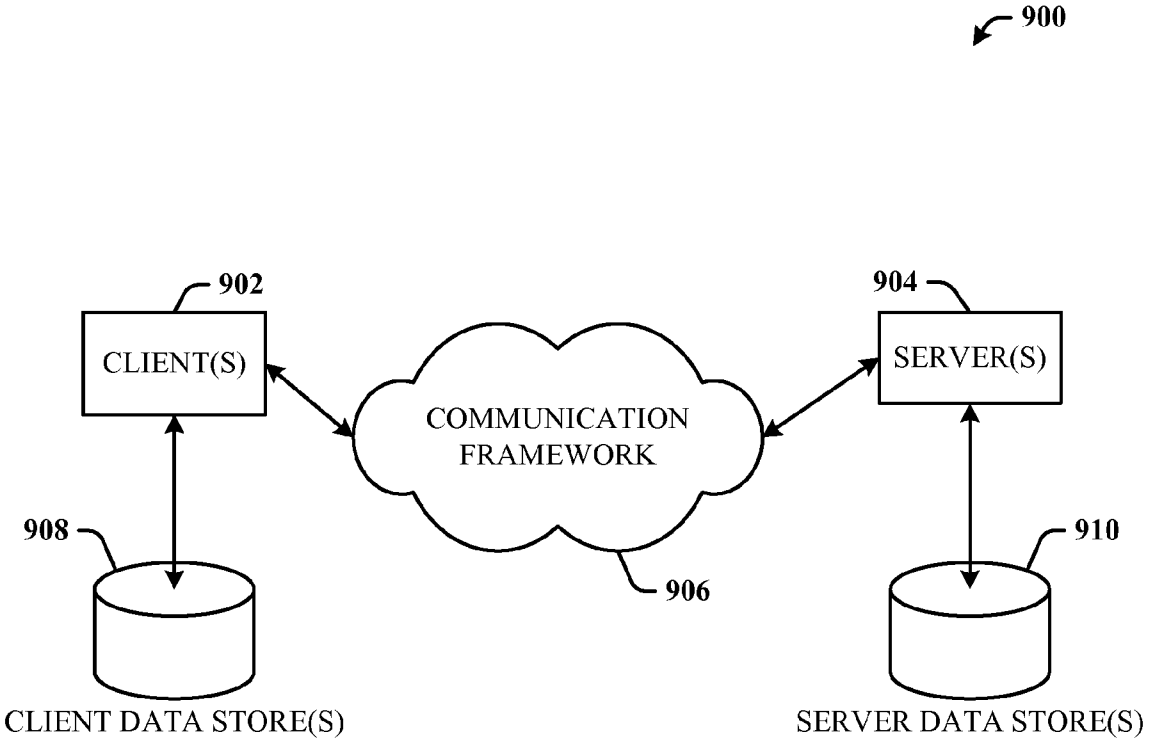
900
902
CLIENT(S)
904
SERVER(S)
COMMUNICATION
FRAMEWORK
908
910
906
CLIENT DATA STORE(S)
SERVER DATA STORE(S)

FIG. 9

SECURE DATA VERIFICATION VIA BIOMETRIC INPUT

BACKGROUND

[0001] Robust security is imperative for network-based systems, particularly for applications that deal with sensitive information, to prevent unauthorized agents from intercepting, corrupting or publishing sensitive data. A suitable information security system must perform with minimum disruption to users to ensure that authorized users are neither erroneously denied access nor unduly restricted in their duties.

[0002] Furthermore, biometric data has long been in use to provide additional security. Biometric data measures and analyzes human physical characteristics for authentication purposes. Biometric data includes fingerprints, eye retinas and irises, facial patterns and hand measurements. However, concerns about identity theft through biometric data have not been resolved.

[0003] Accordingly, a problem common to security-based systems and biometric data is the vulnerability of the security functionality. Compromise of the security functionality and biometric data results in system failures, loss of privacy, data loss, fraud, and identity theft. This is a major concern, since attackers using techniques ranging from simple to sophisticated have compromised a wide variety of existing systems, resulting in the intercepting, misuse, corrupting or publishing of sensitive data. Therefore, there is a continuing need to include adequate security mechanisms to protect such systems and biometric data.

SUMMARY

[0004] The following presents a simplified summary in order to provide a basic understanding of some aspects of the disclosed innovation. This summary is not an extensive overview, and it is not intended to identify key/critical elements or to delineate the scope thereof. Its sole purpose is to present some concepts in a simplified form as a prelude to the more detailed description that is presented later.

[0005] The subject matter disclosed and claimed herein, in one aspect thereof, comprises a system that controls access to secure data or applications via biometric verification. The system comprises a memory module that communicates with biometric data sensors to establish a heightened level of security for controlling access to data and assets stored in the non-volatile memory. The memory module includes a security processor, non-volatile memory, and volatile memory. The security processor provides for concurrent processing of security protocols, provides a secure execution environment within the memory module to evaluate and store biometric data, communicates either directly or indirectly with the biometric data sensors to fetch the biometric data, and analyzes the biometric data to control access to data or applications stored in the non-volatile memory. Specifically, biometric data is input and communicated to the security processor. The biometric data is then compared against the biometric data stored in the non-volatile memory. If the data matches, verification is sent to the external processor, and the user or system is granted access to the secure assets stored in the non-volatile memory.

[0006] Further, the non-volatile memory component can be divided into multiple partitions of varying sizes and access rights. Accordingly, security software is stored in a first partition, the secure data is stored in a second partition, and the biometric data is stored in a third partition. The secure data and biometric data could also be stored in the same partition. As the security processor controls access to the entire non-volatile memory space and monitors all traffic to and from the non-volatile memory components, the security processor is able to manage access to the secure assets stored in the non-volatile memory.

[0007] In another implementation of the claimed subject matter, the biometric data is utilized to control access to user account information. A user selects a payment menu on a mobile device to make a purchase and selects an account to use. The details of the account would be stored inside the non-volatile memory, embedded in the mobile device. Biometric data is used to authenticate the user prior to transferring or enabling access to the account information. The user then places the mobile device within the range of a transaction terminal, and the transaction is complete.

[0008] To the accomplishment of the foregoing and related ends, certain illustrative aspects of the disclosed innovation are described herein in connection with the following description and the annexed drawings. These aspects are indicative, however, of but a few of the various ways in which the principles disclosed herein can be employed and is intended to include all such aspects and their equivalents. Other advantages and novel features will become apparent from the following detailed description when considered in conjunction with the drawings.

BRIEF DESCRIPTION OF THE DRAWINGS

[0009] FIG. **1** illustrates a block diagram of a memory module.

[0010] FIG. **2** illustrates a block diagram of a system that controls access to secure data via biometric verification.

[0011] FIG. **3** illustrates a block diagram of a security processor of the memory module.

[0012] FIG. **4** illustrates a block diagram of a system that controls access to secure data via biometric verification wherein the non-volatile memory component is partitioned.

[0013] FIG. **5** illustrates a flow chart of a method of utilizing biometric data as an encryption mechanism for accessing secure assets stored in a mobile device.

[0014] FIG. **6** illustrates a flow chart of a method of utilizing biometric data as an encryption mechanism wherein a user is allowed or denied access to the secure data.

[0015] FIG. **7** illustrates a flow chart of a method of controlling access to user account information via biometric data.

[0016] FIG. **8** illustrates a block diagram of a computer operable to execute the disclosed encryption mechanism for accessing secure data architecture.

[0017] FIG. **9** illustrates a schematic block diagram of an exemplary computing environment for use with the disclosed control access system.

DETAILED DESCRIPTION

[0018] The innovation is now described with reference to the drawings, wherein like reference numerals are used to refer to like elements throughout. In the following description, for purposes of explanation, numerous specific details are set forth in order to provide a thorough understanding thereof. It may be evident, however, that the innovation can be practiced without these specific details. In other instances,

well-known structures and devices are shown in block diagram form in order to facilitate a description thereof.

[0019] As used in this application, the terms "component," "handler," "model," "system," and the like are intended to refer to a computer-related entity, either hardware, a combination of hardware and software, software, or software in execution. For example, a component can be, but is not limited to being, a process running on a processor, a processor, a hard disk drive, multiple storage drives (of optical and/or magnetic storage medium), an object, an executable, a thread of execution, a program, and/or a computer. By way of illustration, both an application running on a server and the server can be a component. One or more components may reside within a process and/or thread of execution and a component may be localized on one computer and/or distributed between two or more computers.

[0020] Additionally, these components can execute from various computer readable media having various data structures stored thereon. The components may communicate via local and/or remote processes such as in accordance with a signal having one or more data packets (e.g., data from one component interacting with another component in a local system, distributed system, and/or across a network such as the Internet with other systems via the signal). Computer components can be stored, for example, on computer-readable media including, but not limited to, an ASIC (application specific integrated circuit), CD (compact disc), DVD (digital video disk), ROM (read only memory), floppy disk, hard disk, EEPROM (electrically erasable programmable read only memory) and memory stick in accordance with the claimed subject matter.

[0021] As used herein, terms "to infer" and "inference" refer generally to the process of reasoning about or inferring states of the system, environment, and/or user from a set of observations as captured via events and/or data. Inference can be employed to identify a specific context or action, or can generate a probability distribution over states, for example. The inference can be probabilistic-that is, the computation of a probability distribution over states of interest based on a consideration of data and events. Inference can also refer to techniques employed for composing higher-level events from a set of events and/or data. Such inference results in the construction of new events or actions from a set of observed events and/or stored event data, whether or not the events are correlated in close temporal proximity, and whether the events and data come from one or several event and data sources.

[0022] Security is imperative for network-based systems, particularly for applications that deal with sensitive information, to prevent unauthorized agents, in the form of hardware and/or software, from intercepting, misusing, corrupting or publishing sensitive data. As stated supra, suitable information security system must perform with minimum disruption to users to ensure that authorized users are neither erroneously denied access nor unduly burdened or restricted in their duties. Accordingly, the following subject matter optimizes processor utilization and communicates with biometric data to establish a heightened level of security for access control of data.

[0023] A memory module that facilitates integrated security capabilities in a mobile device is disclosed. The memory module arbitrates with an external processor located outside of the memory module for access to the non-volatile memory. Security software, secure data and biometric data are stored in the non-volatile memory. The security processor provides for concurrent processing of security protocols and comparison of biometric data while the external processor executes normal functions, alleviating the external processor from having to execute functions associated with security functions. The memory module acting as proxy for the external processor enables a heightened level of security for communications utilizing the biometric data. The memory module is a tamper-resistant and trusted secure environment and its use within the system by the external processor can prevent fraud, abuse, and theft.

[0024] Referring initially to the drawings, FIG. **1** illustrates a memory module **100** that facilitates integrated security capabilities in accordance with an innovative aspect. The memory module is a package containing one or multiple chips of integrated circuits or semiconductors, wherein one integrated circuit houses a security processor **104** and another integrated circuit houses non-volatile memory **102**. The integrated circuits are then coupled together to form the memory module **100**. Optionally, the security processor **104** and the non-volatile memory **102** could be housed on one integrated circuit.

[0025] Furthermore, the non-volatile memory **102** of the memory module **100** stores security software, such as the biometric template generation, validation and matching algorithms, for use by the security processor **104**. The non-volatile memory **102** also stores secure data and biometric data or templates. The biometric templates include iris data, face data, fingerprint data, DNA, or any other human physical characteristic which can be used for authentication and/or identification purposes. The biometric data is compared against the template and the result is then used for controlling access to the secure assets stored in the non-volatile memory **102**. The non-volatile memory **102** is typically flash memory, but can be any type of non-volatile memory typically used for the task of secondary storage, or long-term persistent storage. Furthermore, one or more non-volatile memory **102** can be included in the memory module **100**. If more than one non-volatile memory **102** is included, the non-volatile memory **102** is not required to be of the same type and/or density.

[0026] The non-volatile memory **102** may also be divided into multiple partitions of varying sizes and access rights. Secure partitioning is utilized to protect essential data and code, secure sensitive information, and allow easy access to common public data. Secure partitioning allows separate access controls to different partitions of data which could be made available based on user, service provider, original equipment manufacturer (OEM), enterprise authentication, or any other type of authentication available. The access controls distinguish between read and write (or erase) permissions and the descriptions of the owners who have the ability to change the access control. For example, the security software may be stored in a first partition, the secure data in a second partition and the biometric data in a third partition. Alternatively, the secure data and the biometric data may be stored in the same partition.

[0027] Furthermore, the security software includes password access control software, authentication software, shared key authentication software, public key infrastructure (PKI) authentication software, integrity check software, encryption/decryption software, anti-virus software, anti-spyware software, secure communication software, and any other type of security software available. The security software is stored in the non-volatile memory **102** to provide integrated security

capabilities within the memory module **100**. Only the security processor **104** accesses the security software from the non-volatile memory **102** and performs security functions based on the specific security software being executed. The security processor **104** controls the entire non-volatile memory storage space and monitors all traffic to and from the non-volatile memory components **102**.

[0028] FIG. **2** illustrates a system **200** that controls access to secure data via biometric identification in accordance with an innovative aspect. The system **200** includes a memory module **202** that communicates with an external biometric sensor or scanner **214** to capture biometric data and compare it to a previously generated biometric template **212** to establish a heightened level of security for controlling access to assets stored in the non-volatile memory **206**. The memory module **202** includes a security processor **204**, the non-volatile memory **206**, and volatile memory or random access memory (RAM) **208**. The volatile memory **208** is used for primary storage and communicates with an external processor **210**. The security processor **204** controls the entire non-volatile memory storage and monitors all traffic to and from the non-volatile memory components **206**. Further, the security processor **204** provides for concurrent processing of security protocols thereby improving system performance. Because of the secure execution environment within the memory module **202**, the communications with the biometric sensor **214** and the assets stored in the non-volatile memory **206** are protected from many of the threats prevalent today.

[0029] As stated supra, the biometric data or templates **212** includes iris data, face data, fingerprint data, Deoxyribonucleic acid (DNA), or any other human physical characteristic for identification and authentication purposes. The biometric templates **212** are used as a reference to determine whether a subject should be granted access to manipulate the secure assets stored in the non-volatile memory **206**. Specifically, biometric data is collected from a user via the biometric sensor **214**, the biometric scanner can include an iris scanner, fingerprint reader or face scanner. The biometric data is then converted via a software application into match points. The software application identifies specific points of data as match points, then these match points are stored as a template in the non-volatile memory **206**. The access control rights of the non volatile memory can be set so that the security processor alone has access to the templates stored in the non-volatile memory **206**.

[0030] When the system needs to identify the user, the security processor **204** will capture the user's biometric data via the biometric sensor **214** then compare the biometric data against biometric templates stored in the non-volatile memory **206** for verification. If the data matches, then notice of successful verification is made available to the external processor **210** and the user or application is allowed access to the secure assets stored in the non-volatile memory **206**. The memory module **202** is a secure environment for the storage of the secure data and biometric data **212** stored in the non-volatile memory **206**, and the security processor **204** of the memory module **202** analyzes the biometric data and templates **212** to establish a heightened level of security for controlling access to the secure assets stored in the non-volatile memory **206**.

[0031] The memory module **202** and external processor **210** are integrated to form a mobile device, wherein the memory module **202** is directly embedded into the mobile device. The mobile device includes a multimedia player, a Personal Digital Assistant (PDA), a cellular phone, a hand held computing device, or any other similar wireless computing device.

[0032] Additionally, the memory module **202** communicates with an outside or external processor **210** via one or more communication busses, to facilitate the integrated security capabilities. The communication bus could be a NOR or NAND bus or both or a single bus which enables a NOR or NAND Interface. If more than one bus is utilized, both can be functioning in parallel. The external processor **210** is a typical applications processor that handles communications and runs applications. The external processor **210** can be a baseband processor or application processor for a mobile handset, PDA, or the like.

[0033] In more detail, FIG. **3** illustrates the components of a security processor **300**. The security processor **300** includes a central processing unit (CPU) **302** or any other type of low power application processor. The CPU **302** within the security processor **300** can manage the flash memory storage (not shown) and provide a secure environment to implement authentication algorithms and security software. The security processor **300** also includes a Joint Test Action Group (JTAG) port **304** for debugging the system with a mechanism to prevent tampering, a voltage detector **306** that indicates the voltage level of the security processor **300** and stops the memory module from functioning when voltage levels are outside of the acceptable range in order to prevent side channel attacks, and an internal oscillator **308** that provides a clock for the security processor **300**. This clock may be exported in its present form or it may be divided to provide the clock signal for other components such as a separate NFC RF chip or a fingerprint sensor. However, other mechanisms (not shown) can be provided that help prevent tampering. For example, temperature detecting, metal overlay (to hide signals), and scrambling of signals are additional methods that can be utilized in the security processor **300**. A host memory interface (I/F) **310** handles all the flash memory transactions with a host processor (not shown). Specifically the host memory I/F **310** manages signaling, thus complying with the interface definitions of the flash memory. The host memory I/F **310** also manages interpretation or differentiating between a secure and non-secure request, and monitors requests to the non-volatile memory to enforce access rights and permissions.

[0034] A host buffer **312** holds data for secured transactions to and from the host processor. The buffer **312** also serves as a mailbox between the CPU **302** and the host processor, wherein interpretation of the messages is carried out by the CPU **302**. A cryptographic accelerator **314** that performs all the cryptographic algorithms, symmetric and a-symmetric needed by the system. The CPU **302** configures the cryptographic accelerator **314** and can control the data flow through the security processor **300**. The CPU **302** interfaces a system bus **320** and the security applications that run on the CPU **302**, arbitrating with the host processor. A flash buffer **316** holds data as it travels to and from the non-volatile or flash memory. The flash buffer **316** enables processing of a page while receiving the next page. A flash memory I/F **318** that handles all transactions to and from the flash memory storage and the security processor **300**, such as signaling and interpretation.

[0035] A system bus **320** that allows the CPU **302** to communicate with the different components of the security processor **300**. CPU ROM/RAM **322** and **324** contains code and data used by the CPU **302**. The ROM **322** stores the CPU boot

loader (not shown). Further, resident code and code overlays execute from the integrated CPU RAM **324**, and are also used for the temporary data storage needs of the CPU **302**. In operation, the host processor communicates with the security processor **300** and accesses the flash memory directly via a bypass route **326**. Or, the host processor can communicate via the memory manager (not shown) running on the security processor **300** and access the flash memory through communications with the memory manager. In either case, access rights are enforced by the security processor **300** according to the security software embedded in the flash memory and the hardware design of the security processor.

[0036] FIG. **4** illustrates a system **400** that controls access to secure data via biometric verification in accordance with an innovative aspect. The system **400** includes a memory module **402** that communicates with biometric data to establish a heightened level of security for controlling access to data stored in the non-volatile memory **406**. The memory module **402** includes a security processor **404**, non-volatile memory **406**, and volatile memory (i.e., RAM) **408**. The volatile memory **408** is used for the temporary data and code storage needs of the external processor **410**. The security processor **404** controls the entire non-volatile memory storage and monitors all traffic to and from the non-volatile memory components **406**. Further, the security processor **404** provides for concurrent processing of security protocols creating the secure execution environment within the memory module **402** and communicates with the biometric data to control access to secure assets stored in the non-volatile memory **406**.

[0037] As shown in FIG. **4**, the non-volatile memory **406** of the memory module **402** is divided into secure memory partitions of varying sizes and access rights. However, the non-volatile memory **406** is not required to be divided into multiple partitions and can function without the partitions. As stated supra, secure partitioning is utilized to protect essential data and code, secure sensitive information, and allow easy access to common public data. Secure partitioning allows separate access controls to different partitions of data which could be made available based on user, service provider, OEM, enterprise authentication, or any other type of authentication available. The access controls distinguish between read and write (or erase) permissions and the descriptions of the owners who have the ability to change the access control. Specifically as illustrated in FIG. **4**, the non-volatile memory **406** is divided into multiple partitions with associated access rights, wherein one partition stores the security software **412**, a second partition stores the secure data **414**, and a third partition stores the biometric data **416**. Alternatively, the secure data **414** and the biometric data **416** may be stored in a single partition. Thus, the non-volatile memory **406** in communication with the security processor **404** creates a secure environment for the assets stored in the non-volatile memory **406**. Further, the security processor **404** also communicates with biometric data to establish a heightened level of security for controlling access to the secure data and assets stored in the non-volatile memory **406**.

[0038] As stated supra, the biometric data is taken from a user via a biometric sensor or scanner, the biometric scanner can include fingerprint, iris or face scanner. The biometric data is then converted via a software application into match points. The software application identifies specific points of data as match points, then these match points are stored as a template in the non-volatile memory. The match points are then translated into a numeric value via an algorithm. The access control rights of the non volatile memory can be set so that the security processor alone has access to the templates stored in the non-volatile memory **406**.

[0039] The biometric sensor **418** captures the biometric data and communicates the biometric data to the security processor **404**. The security processor **404** then compares the biometric data against existing biometric templates stored in the non-volatile memory **406** for verification. If the data matches, then a notice of verification is made available to the external processor **410** and the user or application is allowed access to the secure assets stored in the non-volatile memory **406**. Thus, the memory module **402** creates a secure environment for the storage of the secure data and biometric data and templates stored in the non-volatile memory **406**, and the security processor **404** of the memory module **402** communicates with the biometric data to establish a heightened level of security for controlling access to the secure data and assets stored in the non-volatile memory **406**.

[0040] FIGS. **5-7** illustrate methodologies of controlling access to secure data via biometric verification according to various aspects of the innovation. While, for purposes of simplicity of explanation, the one or more methodologies shown herein (e.g., in the form of a flow chart or flow diagram) are shown and described as a series of acts, it is to be understood and appreciated that the subject innovation is not limited by the order of acts, as some acts may, in accordance therewith, occur in a different order and/or concurrently with other acts from that shown and described herein. For example, those skilled in the art will understand and appreciate that a methodology could alternatively be represented as a series of interrelated states or events, such as in a state diagram. Moreover, not all illustrated acts may be required to implement a methodology in accordance with the innovation.

[0041] Referring to FIG. **5**, a method of controlling access to secure data via biometric verification is illustrated. At **500**, non-volatile memory is provided that stores the secure data. The non-volatile memory may be divided into secure memory partitions of varying sizes and access rights, wherein one partition stores security software, a second partition stores the secure data, and a third partition stores biometric data. Alternatively, the secure data and the biometric data may be stored together in one partition. At **502**, biometric data is taken from a user and input via a biometric sensor. The biometric data includes iris data, face data, fingerprint data, DNA, or any other human physical characteristic for authentication purposes. Specifically, the biometric data is taken from a user via an iris scanner, fingerprint reader or face scanner and communicated to the security processor.

[0042] At **504**, the biometric data is converted into specific match points. The biometric data is converted via a software application into match points. The software application identifies specific points of data as match points, then these match points are stored as a template and used by the security processor to authenticate a user. At **506**, the match points are processed into a numeric value. Typically, the match points are translated into a numeric value via an algorithm.

[0043] And at **508**, the biometric data is compared against the existing biometric templates stored in the non-volatile memory. The biometric sensor(s) captures biometric data and communicates the biometric data to the security processor. The security processor then compares the biometric data against existing biometric templates stored in the non-volatile memory for verification. Further, a secure execution environment is created by integrating the security processor with the

non-volatile memory component to form a memory module. The memory module communicates with the external processor for controlling access to the data stored in the non-volatile memory.

[0044] At **510**, notice of verification of the data match is made available to the external processor. After the biometric data is compared, verification is made available to the external processor specifying that the data matched. At **512**, the user or application is allowed access to the secure assets stored in the non-volatile memory. Thus, the memory module creates a secure environment for the storage of the secure data and biometric data stored in the non-volatile memory, and the security processor of the memory module communicates with the biometric data sensor to establish a heightened level of security for controlling access to data stored in the non-volatile memory.

[0045] Referring to FIG. **6**, a method of controlling access to secure data via biometric verification is illustrated. At **600**, a non-volatile memory is provided that stores the secure data. As stated supra, the non-volatile memory may be divided into secure memory partitions of varying sizes and access rights, wherein one partition stores security software, a second partition stores the secure data, and a third partition stores biometric data. Alternatively, the secure data and the biometric data may be stored in the same partition. At **602**, biometric data is taken from a user and input via a security processor. The biometric data includes iris data, face data, fingerprint data, DNA, or any other human physical characteristic for authentication purposes. Specifically, the biometric data is taken from a user via a fingerprint, iris or face scanner and communicated to the security processor.

[0046] At **604**, the biometric data is converted into specific match points. The biometric data is converted via a software application into match points. The software application identifies specific points of data as match points, these match points are then stored as a template used by the security processor to authenticate a user. At **606**, the match points are processed into a numeric value. Typically, the match points are translated into a numeric value via an algorithm.

[0047] And at **608**, the biometric data is compared against the existing biometric templates stored in the non-volatile memory. The biometric sensor(s) captures biometric data and communicates the biometric data to the security processor. The security processor then compares the biometric data against existing biometric templates stored in the non-volatile memory for verification.

[0048] At **610**, it is determined whether the biometric data matches. At **612**, if the biometric data matches, notification of verification is made available to the external processor. After the biometric data is compared, notification of verification is made available to the external processor specifying that the data matched. At **614**, the user or application is allowed access to the secure assets stored in the non-volatile memory. At **616**, if the biometric data does not match, notification of verification is not made available to the external processor. And at **618**, the user or application is denied access to the secure assets stored in the non-volatile memory. Biometric data may then be taken again from the user and input via the security processor in case an error with the previous biometric input occurred. Thus, the security processor communicates with the biometric data sensor to establish a heightened level of security for controlling access to data stored in the non-volatile memory.

[0049] Referring to FIG. **7**, a method of controlling access to user account information via biometric data is illustrated. At **700**, a user selects a payment application on a mobile device to make a purchase. The menu prompts the user to specify the account, amounts, etc. for the purchase. At **702**, the user selects an account to use, wherein the account details are stored in non-volatile memory. The payment may be made from a credit account, a debit account, a pre-paid cash account, or any similar account. The details of each account would be stored inside the non-volatile memory, embedded in the mobile device.

[0050] At **704**, biometric data is used to authenticate the user prior to transferring account information. Various types of biometric data can be used to authenticate the user, such as iris data, face data, DNA, or any other human physical characteristic for authentication purposes. Specifically, the biometric data is taken from a user via an iris scanner, fingerprint reader, or face scanner and communicated to a security processor. The biometric data is converted into match points and then translated into a numeric value which is compared against existing biometric templates stored in the non-volatile memory. If the data matches, notification of verification is made available to the user and account information is accessed.

[0051] At **706**, the biometric data is authenticated and the user has some amount of time (perhaps 5-10 seconds) to place the mobile device within the range of a transaction terminal before reauthorization is required. The security processor can use it's internal oscillator to track the elapsed time. The payment protocol is executed between an application stored in the mobile device and a physical point of sale (e.g. end terminal, remote server, another mobile device, etc.). At **708**, it is determined whether the user placed the mobile device within the range of a transaction terminal within the allotted time period.

[0052] At **710**, if the user does not place the mobile device within the range of a transaction terminal within the allotted time period, the user is timed out and reauthorization is required. At **712**, if the user does place the mobile device within the range of a transaction terminal within the allotted time period, the terminal verifies the device and the transaction is complete. However, large purchases (i.e., purchases over a set dollar amount), may require a user signature at the terminal for the transaction to be complete. At **714**, the user can view the digital receipt received on the mobile device or utilize short message system (SMS) to view transaction details.

[0053] Referring now to FIG. **8**, there is illustrated a block diagram of a computer operable to execute the disclosed encryption mechanism for accessing secure data architecture. In order to provide additional context for various aspects thereof, FIG. **8** and the following discussion are intended to provide a brief, general description of a suitable computing environment **800** in which the various aspects of the innovation can be implemented. While the description above is in the general context of computer-executable instructions that may run on one or more computers, those skilled in the art will recognize that the innovation also can be implemented in combination with other program modules and/or as a combination of hardware and software.

[0054] Generally, program modules include routines, programs, components, data structures, etc., that perform particular tasks or implement particular abstract data types. Moreover, those skilled in the art will appreciate that the

inventive methods can be practiced with other computer system configurations, including single-processor or multiprocessor computer systems, minicomputers, mainframe computers, as well as personal computers, hand-held computing devices, microprocessor-based or programmable consumer electronics, and the like, each of which can be operatively coupled to one or more associated devices.

[0055] The illustrated aspects of the innovation may also be practiced in distributed computing environments where certain tasks are performed by remote processing devices that are linked through a communications network. In a distributed computing environment, program modules can be located in both local and remote memory storage devices.

[0056] A computer typically includes a variety of computer-readable media. Computer-readable media can be any available media that can be accessed by the computer and includes both volatile and non-volatile media, removable and non-removable media. By way of example, and not limitation, computer-readable media can comprise computer storage media and communication media. Computer storage media includes both volatile and non-volatile, removable and non-removable media implemented in any method or technology for storage of information such as computer-readable instructions, data structures, program modules or other data. Computer storage media includes, but is not limited to, RAM, ROM, EEPROM, flash memory or other memory technology, CD-ROM, digital video disk (DVD) or other optical disk storage, magnetic cassettes, magnetic tape, magnetic disk storage or other magnetic storage devices, or any other medium which can be used to store the desired information and which can be accessed by the computer.

[0057] With reference again to FIG. **8**, the exemplary environment **800** for implementing various aspects includes a computer **802**, the computer **802** including a processing unit **804**, a system memory **806** and a system bus **808**. The system bus **808** couples system components including, but not limited to, the system memory **806** to the processing unit **804**. The processing unit **804** can be any of various commercially available processors. Dual microprocessors and other multiprocessor architectures may also be employed as the processing unit **804**.

[0058] The system bus **808** can be any of several types of bus structure that may further interconnect to a memory bus (with or without a memory controller), a peripheral bus, and a local bus using any of a variety of commercially available bus architectures. The system memory **806** includes read-only memory (ROM) **810** and random access memory (RAM) **812**. A basic input/output system (BIOS) is stored in a non-volatile memory **810** such as ROM, EPROM, EEPROM, which BIOS contains the basic routines that help to transfer information between elements within the computer **802**, such as during start-up. The RAM **812** can also include a high-speed RAM such as static RAM for caching data.

[0059] The computer **802** further includes an internal hard disk drive (HDD) **814** (e.g., EIDE, SATA), which internal hard disk drive **814** may also be configured for external use in a suitable chassis (not shown), a magnetic floppy disk drive (FDD) **816**, (e.g., to read from or write to a removable diskette **818**) and an optical disk drive **820**, (e.g. reading a CD-ROM disk **822** or, to read from or write to other high capacity optical media such as the DVD). The hard disk drive **814**, magnetic disk drive **816** and optical disk drive **820** can be connected to the system bus **808** by a hard disk drive interface **824**, a magnetic disk drive interface **826** and an optical drive interface **828**, respectively. The interface **824** for external drive implementations includes at least one or both of Universal Serial Bus (USB) and IEEE 1394 interface technologies. Other external drive connection technologies are within contemplation of the subject innovation.

[0060] The drives and their associated computer-readable media provide nonvolatile storage of data, data structures, computer-executable instructions, and so forth. For the computer **802**, the drives and media accommodate the storage of any data in a suitable digital format. Although the description of computer-readable media above refers to a HDD, a removable magnetic diskette, and a removable optical media such as a CD or DVD, it should be appreciated by those skilled in the art that other types of media which are readable by a computer, such as zip drives, magnetic cassettes, flash memory cards, cartridges, and the like, may also be used in the exemplary operating environment, and further, that any such media may contain computer-executable instructions for performing the methods of the disclosed innovation.

[0061] A number of program modules can be stored in the drives and RAM **812**, including an operating system **830**, one or more application programs **832**, other program modules **834** and program data **836**. All or portions of the operating system, applications, modules, and/or data can also be cached in the RAM **812**. It is to be appreciated that the innovation can be implemented with various commercially available operating systems or combinations of operating systems.

[0062] A user can enter commands and information into the computer **802** through one or more wired/wireless input devices (e.g., a keyboard **838** and a pointing device, such as a mouse **840**). Other input devices (not shown) may include a microphone, an IR remote control, a joystick, a game pad, a stylus pen, touch screen, or the like. These and other input devices are often connected to the processing unit **804** through an input device interface **842** that is coupled to the system bus **808**, but can be connected by other interfaces, such as a parallel port, an IEEE 1394 serial port, a game port, a USB port, an IR interface, etc.

[0063] A monitor **844** or other type of display device is also connected to the system bus **808** via an interface, such as a video adapter **846**. In addition to the monitor **844**, a computer typically includes other peripheral output devices (not shown), such as speakers, printers, etc.

[0064] The computer **802** may operate in a networked environment using logical connections via wired and/or wireless communications to one or more remote computers, such as a remote computer(s) **848**. The remote computer(s) **848** can be a workstation, a server computer, a router, a personal computer, portable computer, microprocessor-based entertainment appliance, a peer device or other common network node, and typically includes many or all of the elements described relative to the computer **802**, although, for purposes of brevity, only a memory/storage device **850** is illustrated. The logical connections depicted include wired/wireless connectivity to a local area network (LAN) **852** and/or larger networks (e.g., a wide area network (WAN) **854**). Such LAN and WAN networking environments are commonplace in offices and companies, and facilitate enterprise-wide computer networks, such as intranets, all of which may connect to a global communications network (e.g., the Internet).

[0065] When used in a LAN networking environment, the computer **802** is connected to the local network **852** through a wired and/or wireless communication network interface or

adapter **856**. The adaptor **856** may facilitate wired or wireless communication to the LAN **852**, which may also include a wireless access point disposed thereon for communicating with the wireless adaptor **856**.

[0066] When used in a WAN networking environment, the computer **802** can include a modem **858**, or is connected to a communications server on the WAN **854**, or has other means for establishing communications over the WAN **854**, such as by way of the Internet. The modem **858**, which can be internal or external and a wired or wireless device, is connected to the system bus **808** via the serial port interface **842**. In a networked environment, program modules depicted relative to the computer **802**, or portions thereof, can be stored in the remote memory/storage device **850**. It will be appreciated that the network connections shown are exemplary and other means of establishing a communications link between the computers can be used.

[0067] The computer **802** is operable to communicate with any wireless devices or entities operatively disposed in wireless communication, e.g., a printer, scanner, desktop and/or portable computer, portable data assistant, communications satellite, any piece of equipment or location associated with a wirelessly detectable tag (e.g., a kiosk, news stand, restroom), and telephone. This includes at least Wi-Fi and Bluetooth™ wireless technologies. Thus, the communication can be a predefined structure as with a conventional network or simply an ad hoc communication between at least two devices.

[0068] Wi-Fi, or Wireless Fidelity, allows connection to the Internet from a couch at home, a bed in a hotel room, or a conference room at work, without wires. Wi-Fi is a wireless technology similar to that used in a cell phone that enables such devices (e.g., computers) to send and receive data indoors and out; anywhere within the range of a base station. Wi-Fi networks use radio technologies called IEEE 802.11 (a, b, g, etc.) to provide secure, reliable, fast wireless connectivity. A Wi-Fi network can be used to connect computers to each other, to the Internet, and to wired networks (which use IEEE 802.3 or Ethernet). Wi-Fi networks operate in the unlicensed 2.4 and 5 GHz radio bands, at an 11 Mbps (802.11a) or 54 Mbps (802.11b) data rate, for example, or with products that contain both bands (dual band), so the networks can provide real-world performance similar to the basic 10BaseT wired Ethernet networks used in many offices.

[0069] Referring now to FIG. **9**, there is illustrated a schematic block diagram of an exemplary computing environment **900** in accordance with another aspect. The system **900** includes one or more client(s) **902**. The client(s) **902** can be hardware and/or software (e.g., threads, processes, computing devices). The client(s) **902** can house cookie(s) and/or associated contextual information by employing the subject innovation, for example.

[0070] The system **900** also includes one or more server(s) **904**. The server(s) **904** can also be hardware and/or software (e.g., threads, processes, computing devices). The servers **904** can house threads to perform transformations by employing the invention, for example. One possible communication between a client **902** and a server **904** can be in the form of a data packet adapted to be transmitted between two or more computer processes. The data packet may include a cookie and/or associated contextual information, for example. The system **900** includes a communication framework **906** (e.g. a global communication network such as the Internet) that can be employed to facilitate communications between the client (s) **902** and the server(s) **904**.

[0071] Communications can be facilitated via a wired (including optical fiber) and/or wireless technology. The client (s) **902** are operatively connected to one or more client data store(s) **908** that can be employed to store information local to the client(s) **902** (e.g., cookie(s) and/or associated contextual information). Similarly, the server(s) **904** are operatively connected to one or more server data store(s) **910** that can be employed to store information local to the servers **904**.

[0072] What has been described above includes examples of the claimed subject matter. It is, of course, not possible to describe every conceivable combination of components or methodologies for purposes of describing the claimed subject matter, but one of ordinary skill in the art may recognize that many further combinations and permutations of the claimed subject matter are possible. Accordingly, the claimed subject matter is intended to embrace all such alterations, modifications and variations that fall within the spirit and scope of the appended claims. Furthermore, to the extent that the term "includes" is used in either the detailed description or the claims, such term is intended to be inclusive in a manner similar to the term "comprising" as "comprising" is interpreted when employed as a transitional word in a claim.

What is claimed is:

1. A machine implemented system that controls access to secure data via biometric verification, comprising:

non-volatile memory that stores the secure data;

biometric data taken from a user; and

a security processor that compares the biometric data against existing biometric templates stored in the non-volatile memory, the security processor provides access controls to the non-volatile memory.

2. The system of claim **1**, further comprising an external processor that communicates with the security processor to obtain access to the secure data.

3. The system of claim **1**, wherein the biometric data comprises at least one of iris data, face data, fingerprint data and Deoxyribonucleic acid (DNA).

4. The system of claim **2**, further comprising volatile memory used for primary storage that communicates with the external processor, wherein the security processor, the non-volatile memory and the volatile memory are integrated to form a memory module that uses biometric user authentication to establish a heightened level of security for controlling access to the secure assets stored in the non-volatile memory.

5. The system of claim **2**, wherein the security processor, the external processor and the non-volatile memory are incorporated to form a mobile device.

6. The system of claim **5**, wherein the mobile device comprises one of a multimedia player, a Personal Digital Assistant (PDA), a cell phone, and a hand held computing device.

7. The system of claim **1**, wherein the non-volatile memory is flash memory.

8. The system of claim **7**, wherein the flash memory is NOR and/or NAND flash memory.

9. The system of claim **1**, wherein the biometric data is converted via a software application that identifies specific points of data as match points, the match points are stored as a template and used by the security processor to authenticate a user.

10. The system of claim **9** wherein the security processor collects a user's biometric information through a direct connection with a biometric sensor.

11. The system of claim **10** wherein the security processor and biometric sensor communicate through an encrypted channel.

12. The system of claim **11** wherein the encrypted channel is enabled through the use of a common secret key.

13. The system of claim **9**, wherein the security processor compares a user's biometric data against the templates stored in the non-volatile memory for user identification or verification, notice of verification is then made available to the external processor and the user or application is allowed to access the secure data.

14. The system of claim **1**, wherein the biometric data controls access to a user's account information, such that when the user makes a mobile payment via a mobile device, biometric information is used to authenticate the user prior to transferring account information.

15. The system of claim **14** wherein the user's biometric data is transferred via the mobile device to a server via the payment terminal.

16. A method of controlling access to secure data via biometric verification, comprising:

providing non-volatile memory that stores the secure data;

inputting biometric data taken from a user;

converting the biometric data into specified match points;

processing the match points into a numeric value;

comparing the biometric data against existing biometric templates stored in the non-volatile memory;

making available notice of verification to an external processor; and

allowing the user or application to access the secure data.

17. The method of claim **16**, wherein a security processor is used to compare the biometric data against the existing biometric templates stored in the non-volatile memory

18. The method of claim **17**, wherein the biometric data is converted into specified match points via a software application that identifies specific points of data as match points, the match points are stored as a template and used by the security processor to authenticate a user.

19. The method of claim **18**, wherein the external processor communicates with the security processor to obtain access to the secure data.

20. The method of claim **19**, wherein the security processor, non-volatile memory and volatile memory are incorporated to form a memory module that uses biometric user authentication to establish a heightened level of security for controlling access to the secure assets stored in the non-volatile memory.

21. A method of controlling access to user account information via biometric data, comprising:

selecting a payment application on a mobile device to make a purchase;

selecting an account to use, wherein the account details are stored in non-volatile memory;

using biometric data to authenticate a user prior to transferring account information;

placing the mobile device within range of a transaction terminal;

verifying the mobile device and completing the transaction; and

viewing a digital receipt received.

22. The method of claim **21**, wherein the account comprises at least one of a credit account, a debit account and a pre-paid cash account.

23. The method of claim **21**, wherein the biometric data is obtained from at least one of an iris scanner, a fingerprint reader, a face scanner and DNA.

* * * * *